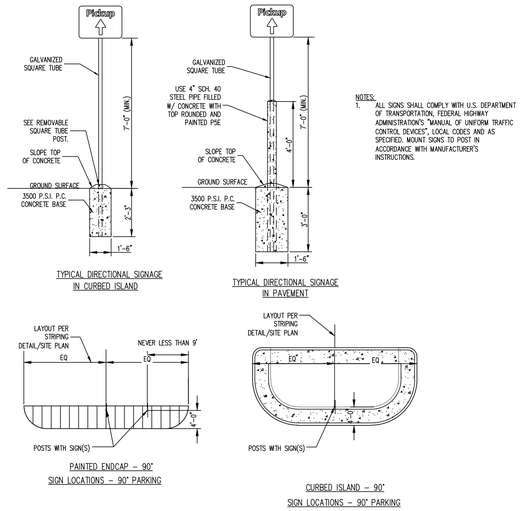

NOTES:
1. ALL SIGNS SHALL COMPLY WITH U.S. DEPARTMENT OF TRANSPORTATION, FEDERAL HIGHWAY ADMINISTRATION'S "MANUAL OF UNIFORM TRAFFIC CONTROL DEVICES", LOCAL CODES AND AS SPECIFIED. MOUNT SIGNS TO POST IN ACCORDANCE WITH MANUFACTURER'S INSTRUCTIONS.

TYPICAL DIRECTIONAL SIGNAGE IN CURBED ISLAND

TYPICAL DIRECTIONAL SIGNAGE IN PAVEMENT

SIGNAGE DIRECTIONAL SITE MOUNTING AND BASE

06/13/19

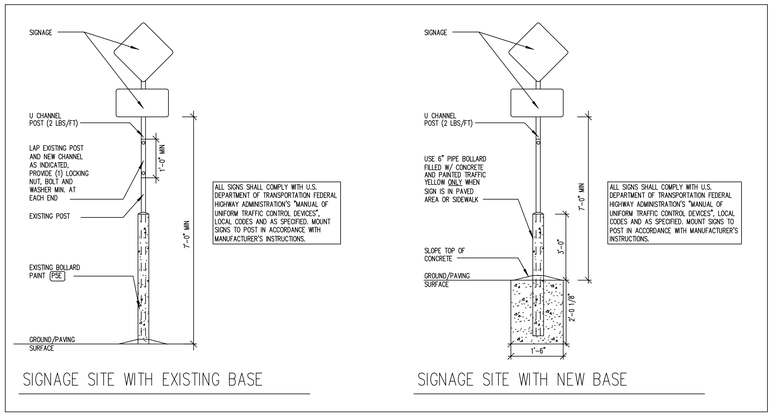

SIGNAGE SITE WITH EXISTING BASE

SIGNAGE SITE WITH NEW BASE

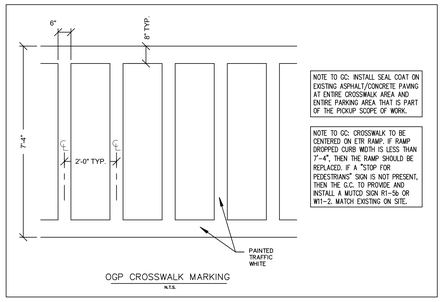

OGP CROSSWALK MARKING
N.T.S.

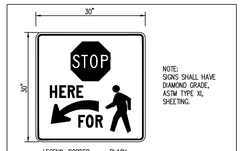

R1-5b
STOP FOR PEDESTRIANS
N.T.S.

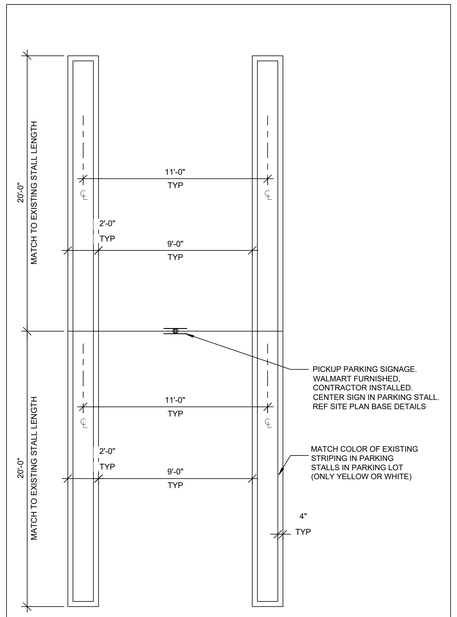

PARKING STALLS 20' BACK TO BACK
N.T.S.

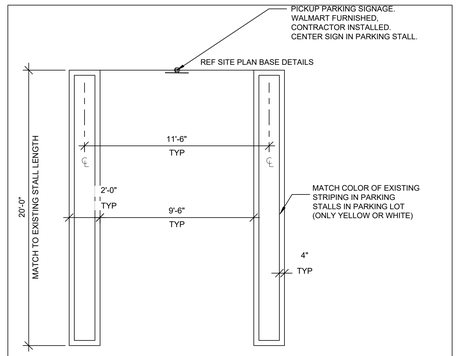

PARKING STALLS 20' PULL THROUGH
N.T.S.

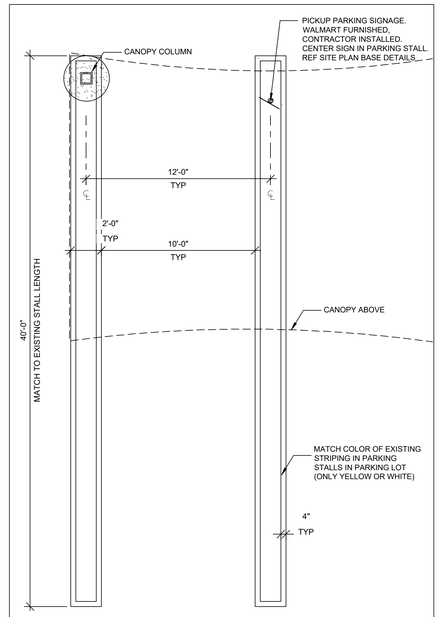

PARKING STALLS 40' PULL THRU CANOPY
N.T.S.

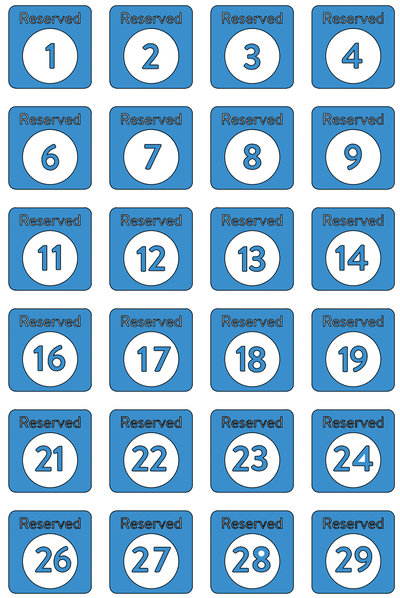

Stall Designation Signs
18" x 18" 2.25 SF

Logo Signs (Large)
Also Pickup Hours sign size
36" x 18"

SIGNS FURNISHED BY WALMART, ATTACHMENT TO WALL OR BOLLARD BY G.C.

Parking Stall Placard

Logo Signs (Small)
18" x 8" 1.00 SF

Call In Sign
18" x 8" 1.00 SF

Directional Signs (Left / Straight / Right)
18" x 24" 3.00 SF

"PICKUP" SIGNAGE

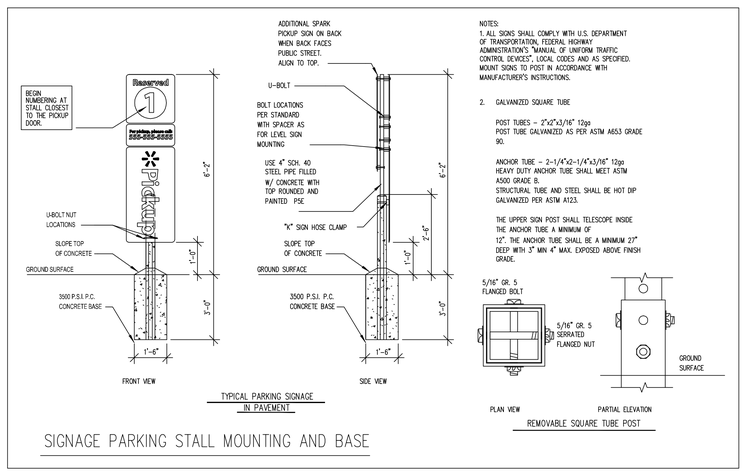

TYPICAL PARKING SIGNAGE IN PAVEMENT

REMOVABLE SQUARE TUBE POST

NOTES:
1. ALL SIGNS SHALL COMPLY WITH U.S. DEPARTMENT OF TRANSPORTATION, FEDERAL HIGHWAY ADMINISTRATION'S "MANUAL OF UNIFORM TRAFFIC CONTROL DEVICES", LOCAL CODES AND AS SPECIFIED. MOUNT SIGNS TO POST IN ACCORDANCE WITH MANUFACTURER'S INSTRUCTIONS.

2. GALVANIZED SQUARE TUBE

POST TUBES – 2"x2"x3/16" 12ga
POST TUBE GALVANIZED AS PER ASTM A653 GRADE 90.

ANCHOR TUBE – 2-1/4"x2-1/4"x3/16" 12ga
HEAVY DUTY ANCHOR TUBE SHALL MEET ASTM A500 GRADE B.
STRUCTURAL TUBE AND STEEL SHALL BE HOT DIP GALVANIZED PER ASTM A123.

THE UPPER SIGN POST SHALL TELESCOPE INSIDE THE ANCHOR TUBE A MINIMUM OF 12". THE ANCHOR TUBE SHALL BE A MINIMUM 27" DEEP WITH 3" MIN 4" MAX. EXPOSED ABOVE FINISH GRADE.

SIGNAGE PARKING STALL MOUNTING AND BASE

FINISH LEGEND

P76	WALMART BLUE SW#076
P5E	SAFETY YELLOW

Galloway
1701 Telford Drive, Suite 107
Colorado Springs, CO 80920
719.900.7220
Galloway-Co.com

STIPULATION FOR REUSE

THIS DRAWING WAS PREPARED FOR USE ON A SPECIFIC SITE AT ALBUQUERQUE, NM. CONTEMPORANEOUSLY WITH ITS ISSUE DATE, THIS DRAWING IS NOT SUITABLE FOR USE ON A DIFFERENT PROJECT OR ON ANOTHER PROJECT OF SIMILAR OR ANOTHER DESIGN. LICENSED ARCHITECTS AND ENGINEERS RELIEVE THE OWNER OF ANY REUSE RELIEVE ON ANOTHER PROJECT IS NOT THE RESPONSIBILITY OF THE OWNER TO THE C.W.

BRANDON ALLEY
NEW MEXICO
25037
PROFESSIONAL ENGINEER
01/21/2021

Walmart
ALBUQUERQUE (S), NM
3500 COORS BLVD SW
STORE NO: 05430-248
JOB NUMBER: SGA005430.20 PROTO: 1.92

2021 MAJOR PROJECT

ISSUE BLOCK

1	PR #1	01/21/21

CHECKED BY:	RCJ
DRAWN BY:	DJS
PROTO CYCLE:	09/25/20
DOCUMENT DATE:	01/21/21

SITE DETAILS

SHEET: CS4