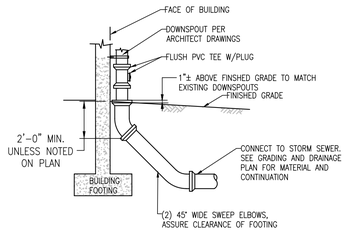

DOWNSPOUT LEADER DETAIL

NOT TO SCALE

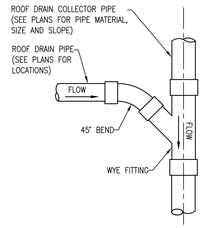

NOTE:

1. CONTRACTOR SHALL PROVIDE RISER PIPE AND ADDITIONAL FITTINGS AS NECESSARY TO CONNECT ROOF DRAIN LEADERS TO ROOF DRAIN COLLECTOR PIPE.

ROOF DRAIN WYE CONNECTION DETAIL

NOT TO SCALE

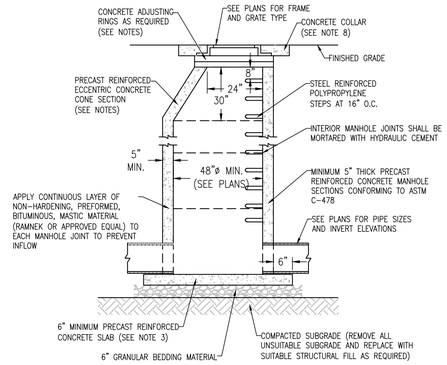

NOTES:

1. PRECAST REINFORCED CONCRETE CONE SECTION AND ADJUSTING RINGS SHALL CONFORM TO ASTM C-39 (COMPRESSIVE STRENGTH TEST).
2. MAXIMUM ALLOWABLE HEIGHT FOR CONCRETE ADJUSTING RINGS SHALL BE 8" UNLESS OTHERWISE NOTED.
3. PRECAST REINFORCED MONOLITHIC CONCRETE MANHOLE BOTTOM WITH INTEGRAL SIDEWALLS CAN BE SUBSTITUTED IN PLACE OF THE CONCRETE BOTTOM SLAB DESIGN SHOWN.
4. FLAT-TOP SLABS SHALL BE PROVIDED FOR SHALLOW MANHOLE INSTALLATIONS ONLY AND SHALL BE DESIGNED FOR HS-20 TRAFFIC LOADING WHEN LOCATED IN PAVED AREAS.
5. MANHOLE BARREL SECTIONS SHALL BE TONGUE AND GROOVE TYPE.
6. MANHOLE WALL THICKNESSES AND CONE SECTION HEIGHT DIMENSIONS SHOWN ARE THE MINIMUM REQUIRED FOR 48"ø PRECAST REINFORCED CONCRETE STORM MANHOLES. DIMENSIONS FOR LARGER DIAMETER STORM MANHOLE STRUCTURES SHALL BE ADJUSTED PER MANUFACTURER SPECIFICATIONS.
7. SEE PLANS FOR MANHOLE DIAMETER SIZES, RIM ELEVATIONS AND PIPE INVERT ELEVATIONS AND LOCATIONS.
8. MINIMUM 8" THICK CONCRETE COLLARS SHALL BE INSTALLED AROUND ALL CATCH BASIN CASTINGS LOCATED IN PAVED AREAS AND SHALL EXTEND A MINIMUM OF 2' BEYOND CASTING.

STORM MANHOLE DETAIL

NOT TO SCALE

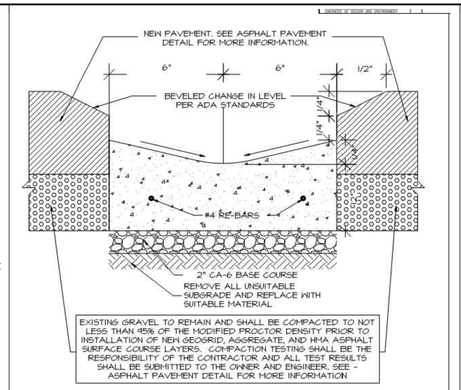

DETAIL - 1' WIDE DEPRESSED CURB

NOT TO SCALE

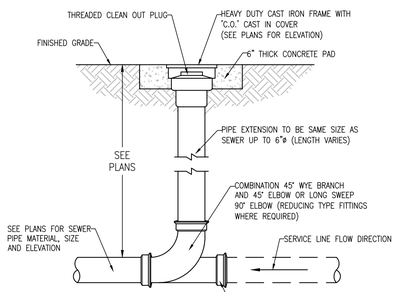

NOTE:

1. SEE APPLICABLE DETAIL FOR PIPE BEDDING AND BACKFILL REQUIREMENTS.

SEWER CLEAN OUT DETAIL

NOT TO SCALE

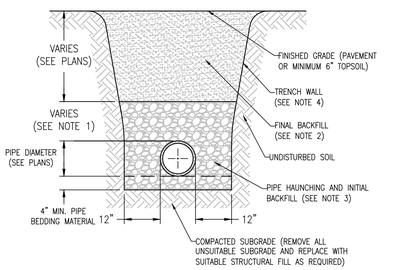

NOTES:

1. 12" MINIMUM INITIAL GRANULAR BACKFILL REQUIRED OVER TOP OF PIPE FOR PIPES UP TO AND INCLUDING 48" IN DIAMETER. 18" MINIMUM GRANULAR BACKFILL REQUIRED OVER TOP OF PIPE FOR PIPES GREATER THAN 48" IN DIAMETER.
2. BACKFILL TRENCH WITH INORGANIC EXCAVATED MATERIAL EXCEPT WHERE UNDER OR WITHIN TWO (2) FEET OF PAVEMENT WHERE GRANULAR BACKFILL MATERIAL IS REQUIRED.
3. ALL BACKFILL MATERIALS SHALL BE PLACED AND PROPERLY COMPACTED TO 98% OF THE MATERIALS MAXIMUM DRY DENSITY IN ACCORDANCE WITH ASTM D698 AND THE GEOTECHNICAL ENGINEERING REPORT RECOMMENDATIONS.
4. ALL TRENCH EXCAVATIONS SHALL BE PROTECTED IN ACCORDANCE WITH APPLICABLE FEDERAL, STATE, AND LOCAL REGULATIONS, LAWS AND RULES. AT A MINIMUM, THEY SHALL NOT BE LESS THAN THE STANDARDS AND REGULATIONS ESTABLISHED BY OSHA IN 29 CFR PART 1926.

FLEXIBLE PIPE TRENCH DETAIL

NOT TO SCALE

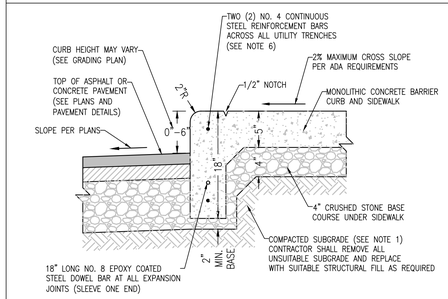

NOTES:

1. SEE GEOTECHNICAL ENGINEERING REPORT FOR SUBGRADE COMPACTION AND PREPARATION REQUIREMENTS.
2. ALL PORTLAND CEMENT CONCRETE SHALL BE FURNISHED AND INSTALLED IN ACCORDANCE WITH PROJECT SPECIFICATIONS.
3. PROVIDE INTEGRAL BLACK COLORED CONCRETE SIDEWALK PER PROJECT SPECIFICATIONS WHERE INDICATED ON THE PLANS.
4. CONTROL JOINTS SHALL BE INSTALLED AT FIVE (5) FEET ON CENTER FOR SIDEWALKS AND TEN (10) FEET ON CENTER FOR CURBS UNLESS OTHERWISE NOTED.
5. EXPANSION JOINTS SHALL BE INSTALLED AT FIFTY (50) FEET ON CENTER, CURB AND SIDEWALK RADIUS POINTS, ALL LOCATIONS WHERE NEW CONCRETE SIDEWALKS OR CURBS ADJOIN EXISTING CONCRETE AND FIVE (5) FEET ON EACH SIDE OF ALL UTILITY CASTINGS ADJACENT TO NEW CONCRETE.
6. INSTALL TWO (2) CONTINUOUS NO. 4 STEEL REINFORCEMENT BARS PERPENDICULAR TO AND CENTERED OVER ALL UTILITY TRENCH CROSSINGS SO BARS EXTEND A MINIMUM OF FIVE (5) FEET BEYOND TRENCH.

MONOLITHIC CONCRETE CURB AND SIDEWALK DETAIL

NOT TO SCALE

ZURN Z508 9[229]EXTRA-HEAVY-DUTY DRAIN

SPECIFICATION SHEET

TAG _____

Dimensional Data (inches and [mm]) are Subject to Manufacturing Tolerances and Change Without Notice

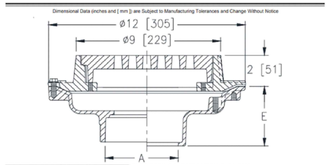

A Pipe Size in [mm]	Approx. Wt. Lbs. [kg]	Grate Open Area Sq. In. [cm²]
2, 3, 4 [51, 76, 102]	21 [10]	18[116]
6 [152]	26 [11]	

ENGINEERING SPECIFICATION: ZURN Z508 9" [229mm] Diameter top drain, Dura-Coated cast iron body with bottom outlet, sediment bucket, seepage pan and combination membrane flashing clamp and frame for extra-heavy-duty cast iron deep flange slotted grate.

OPTIONS (Check/specify appropriate options)

PIPE SIZE	(Specify size/type)	OUTLET	"B" BODY HT. DIM.
4 [102]	____ IC	Inside Caulk	3-3/4 [95]
4 [102]	____ IG	Inside Gasket	3-3/4 [95]
4 [102]	____ IP	Threaded	2-3/4 [70]
2, 3, 4 [51, 76, 102]	____ NH	No-Hub	4-3/4 [121]
6 [152]	____ NH	No-Hub	5-1/4 [133]
2, 3, 4 [51, 76, 102]	____ NL	Neo-Loc	3-9/16 [90]

PREFIXES

____ Z D.C.C.I. Body and Top*
____ ZB D.C.C.I. Body with Polished Bronze Top (Add 3/16 [5] to 2 [51] Dim. and 3/4 [20] to 9 [229] Dim.)
____ ZN D.C.C.I. Body with Polished Nickel Bronze Top (Add 3/16 [5] to 2 [51] Dim. and 3/4 [20] to 9 [229] Dim.)

SUFFIXES

____ -AR Acid Resisting Epoxy Coated Cast Iron
____ -DG Durasist Grate
____ -G Galvanized Cast Iron
____ -HP Heel-Proof Grate
____ -P Trap Primer Connection
____ -S Secondary Strainer
____ -SC Solid Cover with Lift Handle
____ -SG Solid Gasketed Cover with Lift Handle
____ - TC Neo-Loc Test Cap Gasket (2, 3, 4 [51, 76, 102] NL Bottom Outlet Only)
____ -TS Top Secured with Slotted Screws
____ -VP Vandal-Proof Secured Top
____ -V Sediment Bucket
____ -90 90° Threaded Side Outlet Body (4 [102] Size Only)

* Regularly furnished unless otherwise specified.

Zurn Industries, LLC | Specification Drainage Operation
1801 Pittsburgh Avenue, Erie, PA, U.S.A. 16502 Ph. 814-455-0676, Fax 814-454-7929
In Canada | Zurn Industries Limited
3564 Nashua Drive, Mississauga, Ontario L4V 1L2 Ph. 905-405-8272, Fax 905-405-1292
www.zurn.com

Rev: G
Date: 05/26/2017
C.N. No. 137889
Prod. | Dwg. No. Z508

HEAVY DUTY AREA DRAIN DETAIL

NOT TO SCALE

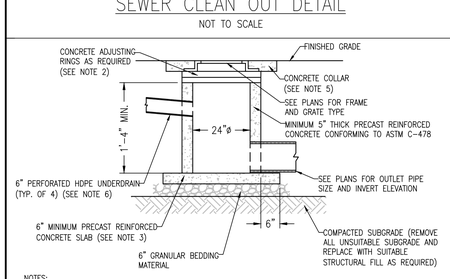

NOTES:

1. PRECAST REINFORCED CONCRETE ADJUSTING RINGS SHALL CONFORM TO ASTM C-39 (COMPRESSIVE STRENGTH TEST).
2. MAXIMUM ALLOWABLE HEIGHT FOR CONCRETE ADJUSTING RINGS SHALL BE 8" UNLESS OTHERWISE NOTED.
3. PRECAST REINFORCED MONOLITHIC CONCRETE MANHOLE BOTTOM WITH INTEGRAL SIDEWALLS CAN BE SUBSTITUTED IN PLACE OF THE CONCRETE BOTTOM SLAB DESIGN SHOWN.
4. SEE PLANS FOR INLET RIM ELEVATIONS AND PIPE INVERT ELEVATIONS AND LOCATIONS.
5. MINIMUM 8" THICK CONCRETE COLLARS SHALL BE INSTALLED AROUND ALL INLET CASTINGS LOCATED IN PAVED AREAS AND SHALL EXTEND A MINIMUM OF 2' BEYOND CASTING.
6. CONTRACTOR SHALL INSTALL (4) 6" PERFORATED HDPE UNDERDRAINS AT MINIMUM 1% SLOPE AT EACH INLET (SEE PERFORATED PIPE UNDERDRAIN DETAIL FOR ADDITIONAL INFORMATION).

2'ø INLET DETAIL

NOT TO SCALE

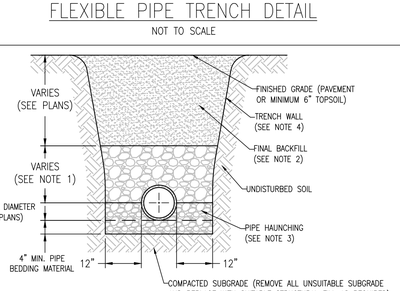

NOTES:

1. 12" MINIMUM INITIAL GRANULAR BACKFILL REQUIRED OVER TOP OF PIPE.
2. BACKFILL TRENCH WITH INORGANIC EXCAVATED MATERIAL EXCEPT WHERE UNDER OR WITHIN TWO (2) FEET OF PAVEMENT WHERE GRANULAR BACKFILL MATERIAL IS REQUIRED.
3. ALL BACKFILL MATERIALS SHALL BE PLACED AND PROPERLY COMPACTED TO 98% OF THE MATERIALS MAXIMUM DRY DENSITY IN ACCORDANCE WITH ASTM D698 AND THE GEOTECHNICAL ENGINEERING REPORT RECOMMENDATIONS.
4. ALL TRENCH EXCAVATIONS SHALL BE PROTECTED IN ACCORDANCE WITH APPLICABLE FEDERAL, STATE, AND LOCAL REGULATIONS, LAWS AND RULES. AT A MINIMUM, THEY SHALL NOT BE LESS THAN THE STANDARDS AND REGULATIONS ESTABLISHED BY OSHA IN 29 CFR PART 1926.

RIGID PIPE TRENCH DETAIL

NOT TO SCALE

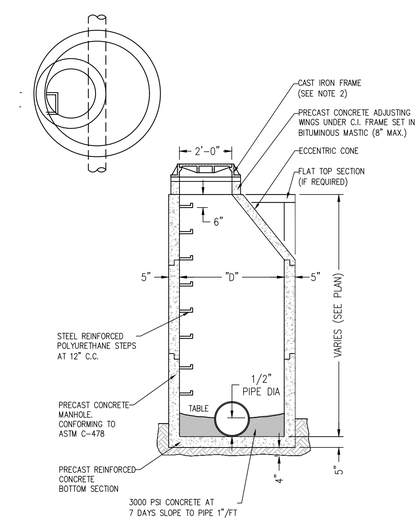

NOTES:

1. PROVIDE MINIMUM 4" OF PIPE BEDDING MATERIAL UNDER MANHOLE BOTTOM SECTION & FILL ENTIRE EXCAVATION AROUND MANHOLE UP TO ℄ OF SEWER WITH BEDDING MATERIAL.
2. MANHOLES SHALL BE FURNISHED WITH A WATERTIGHT FRAME AND SOLID CAST IRON COVER WITH THE WORDS "SANITARY SEWER" IMPRINTED ON THE COVER WITH RAISED LETTERS.
3. PIPE SECTION SHALL BE LAID THRU MANHOLE TO FORM CHANNEL & TOP HALF BROKEN OUT EVEN WITH CONCRETE TABLE.
4. PROVIDE BITUMINOUS MASTIC BETWEEN ALL SECTIONS, RINGS & FRAME.
5. PROVIDE SMOOTH "Y" TRANSITIONS FOR ALL BRANCHES AND BENDS IN LINE.
6. WHERE SEWER DEPTH IS 8'-0" OR LESS USE "FLAT" TOP IN PLACE OF CONE DESIGNED TO SUPPORT AASHTO H20 LOADING.
   D = 4'-0" FOR 24" DIA. & UNDER 5'-0" FOR 27" TO 36" DIA. 6'-0" FOR 36" TO 48"
7. MANHOLE COVERS MUST HAVE O-RING GASKETS AND SEALED PICK HOLES.
8. PROVIDE CHIMNEY SEAL AND PIPE BOOT ON ALL SANITARY MANHOLES.

SANITARY SEWER MANHOLE DETAIL

NOT TO SCALE

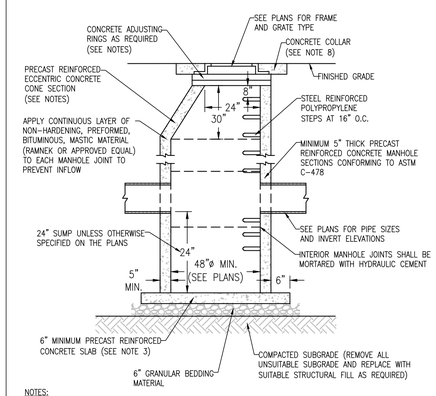

NOTES:

1. PRECAST REINFORCED CONCRETE CONE SECTION AND ADJUSTING RINGS SHALL CONFORM TO ASTM C-39 (COMPRESSIVE STRENGTH TEST).
2. MAXIMUM ALLOWABLE HEIGHT FOR CONCRETE ADJUSTING RINGS SHALL BE 8" UNLESS OTHERWISE NOTED.
3. PRECAST REINFORCED MONOLITHIC CONCRETE MANHOLE BOTTOM WITH INTEGRAL SIDEWALLS CAN BE SUBSTITUTED IN PLACE OF THE CONCRETE BOTTOM SLAB DESIGN SHOWN.
4. FLAT-TOP SLABS SHALL BE PROVIDED FOR SHALLOW CATCH BASIN INSTALLATIONS ONLY AND SHALL BE DESIGNED FOR HS-20 TRAFFIC LOADING WHEN LOCATED IN PAVED AREAS.
5. MANHOLE BARREL SECTIONS SHALL BE TONGUE AND GROOVE TYPE.
6. MANHOLE WALL THICKNESSES AND CONE SECTION HEIGHT DIMENSIONS SHOWN ARE THE MINIMUM REQUIRED FOR 48"ø PRECAST REINFORCED CONCRETE CATCH BASINS. DIMENSIONS FOR LARGER DIAMETER CATCH BASIN STRUCTURES SHALL BE ADJUSTED PER MANUFACTURER SPECIFICATIONS.
7. SEE PLANS FOR CATCH BASIN DIAMETER SIZES, RIM ELEVATIONS AND PIPE INVERT ELEVATIONS AND LOCATIONS.
8. MINIMUM 8" THICK CONCRETE COLLARS SHALL BE INSTALLED AROUND ALL CATCH BASIN CASTINGS LOCATED IN PAVED AREAS AND SHALL EXTEND A MINIMUM OF 2' BEYOND CASTING.
9. CONTRACTOR SHALL INSTALL (4) 6" PERFORATED HDPE UNDERDRAINS AT MINIMUM 1% SLOPE AT EACH CATCH BASIN (SEE PERFORATED PIPE UNDERDRAIN DETAIL FOR ADDITIONAL INFORMATION).

CATCH BASIN DETAIL

NOT TO SCALE

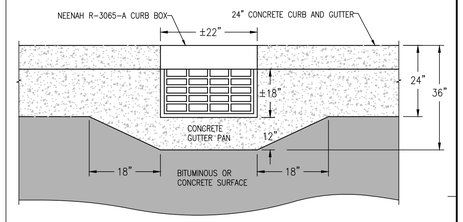

CURB TRANSITION DETAIL

NOT TO SCALE

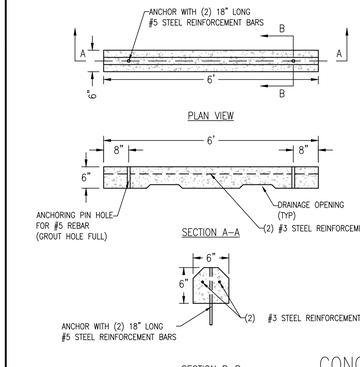

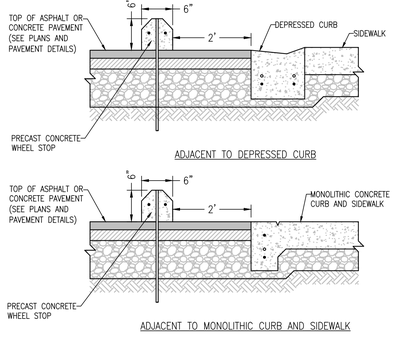

CONCRETE WHEEL STOP DETAIL

NOT TO SCALE

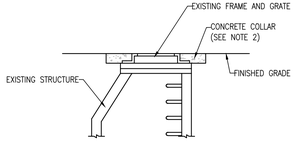

NOTES:

1. ADJUSTING RINGS SHALL CONFORM TO ASTM C-39 (COMPRESSIVE STRENGTH TEST).
2. MINIMUM 8" THICK CONCRETE COLLARS SHALL BE INSTALLED AROUND ALL CATCH BASIN CASTINGS LOCATED IN PAVED AREAS AND SHALL EXTEND A MINIMUM OF 2' BEYOND CASTING.

CONCRETE COLLAR DETAIL

NOT TO SCALE

GreenbergFarrow
COA#:
21 South Evergreen Avenue
Suite 200
Arlington Heights, IL 60005
t: 847 788 9200 f: 847 788 9537

PROJECT TEAM

COPYRIGHT NOTICE
This drawing is the property of the above referenced Professional and is not to be used for any purpose other than the specific project and site named herein, and cannot be reproduced in any manner without the express written permission from the Professional.

ISSUE/REVISION RECORD

DATE	DESCRIPTION
02/26/21	COORDINATION SET
03/19/21	PERMIT SET
04/09/21	SITE PLAN
04/14/21	PERMIT RESPONSE
04/30/21	PERMIT RESPONSE

Proj 20182050

MICHAEL E. HAAS
NEW MEXICO
26056
PROFESSIONAL ENGINEER

expires 12/31/22
date 4/30/21

PROFESSIONAL IN CHARGE
MICHAEL HAAS
PROFESSIONAL ENGINEER
LICENSE NO. 26056

PROJECT MANAGER
EDWARD GOSS

QUALITY CONTROL
EDWARD GOSS

DRAWN BY
MITCH HEFFERNAN

PROJECT NAME

TEXAS ROADHOUSE

ALBUQUERQUE NEW MEXICO

10000 COORS BYPASS NW ALBUQUERQUE, NM 87114

Bubba's 33 PIZZA • BURGERS • BEER

PROJECT NUMBER
20182050.0

SHEET TITLE

CONSTRUCTION DETAILS

SHEET NUMBER

C7.1