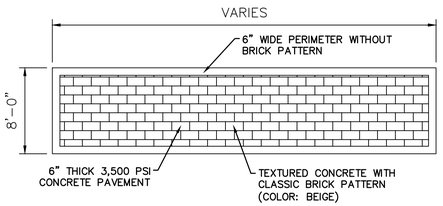

Textured Pavement Detail

NTS

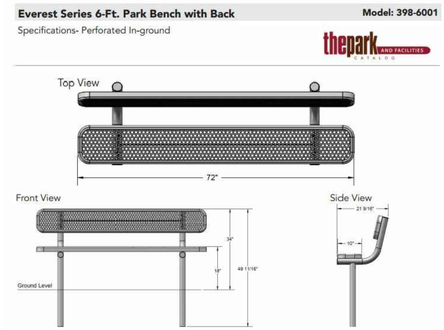

Bench Detail

NTS

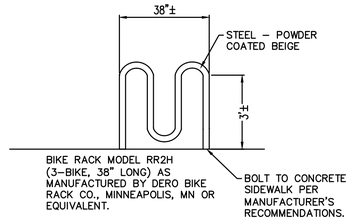

Bike Rack Detail

NTS

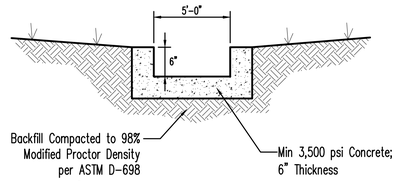

5' Concrete Flume Detail

NTS

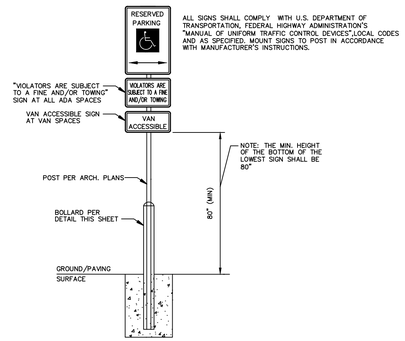

H/C Sign Detail

NTS

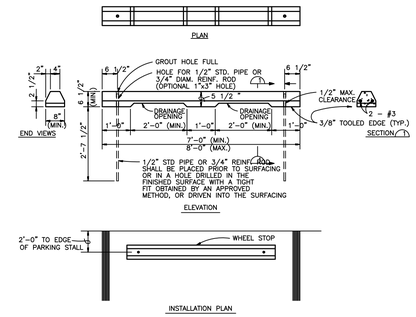

Precast Concrete Wheel Stop

NTS

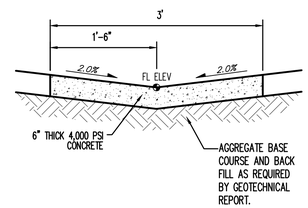

Valley Gutter Detail

NTS

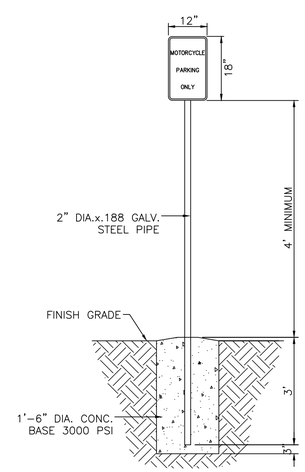

Motorcycle Parking Sign

NTS

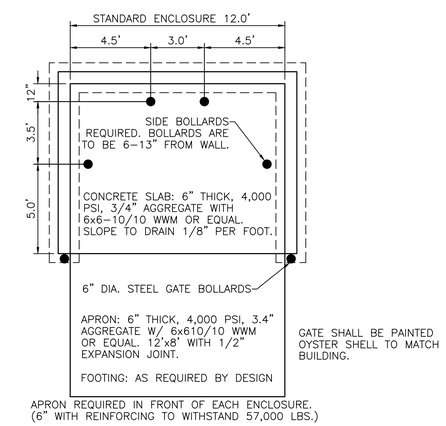

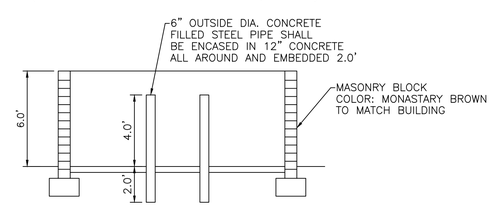

NOTE: THESE ARE THE MINIMUM REQUIREMENTS FOR TRASH ENCLOSURES. DESIGNS MAY VARY TO FIT THE SELECTED ENCLOSURE.

Dumpster Enclosure Detail

NTS

REV	DATE	BY	REVISION
6			
5			
4			
3			
2			
1			

Wooten Engineering
1005 21st St SE, Suite A5
Rio Rancho, N.M. 87124
Phone: (505) 980-3560

JEFFREY TODD WOOTEN
NEW MEXICO
16892
PROFESSIONAL ENGINEER
6/4/2018

PROJECT TITLE: WECKS RESTAURANT
7301 PASEO DEL NORTE NE
ALBUQUERQUE, NEW MEXICO 87113

DRAWN BY: JEFF WOOTEN
JOB NO. 2016032
PROJECT MANAGER: JEFF WOOTEN
SHEET TITLE: Site Details

DATE: 06.4.2018
SCALE: PER PLAN
sheet- C401
of- 6