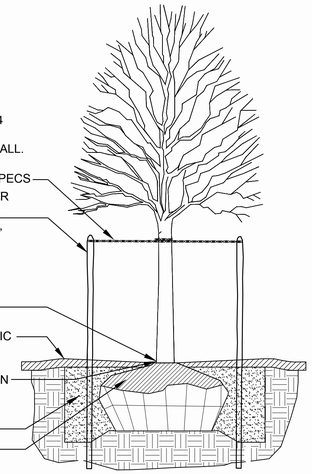

1 TREE PLANTING
SECTION
SCALE : 1/2" = 1"

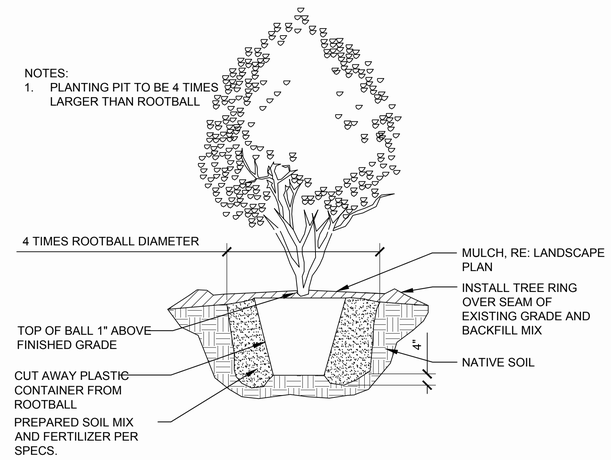

2 TREE PLANTING - CONTAINER
SECTION
SCALE : 1/2" = 1"

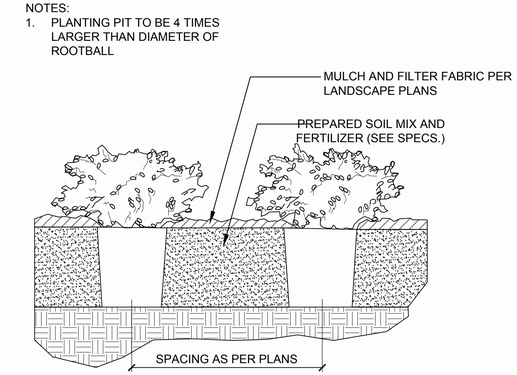

3 SHRUB PLANTING
SECTION
SCALE : 1/2" = 1"

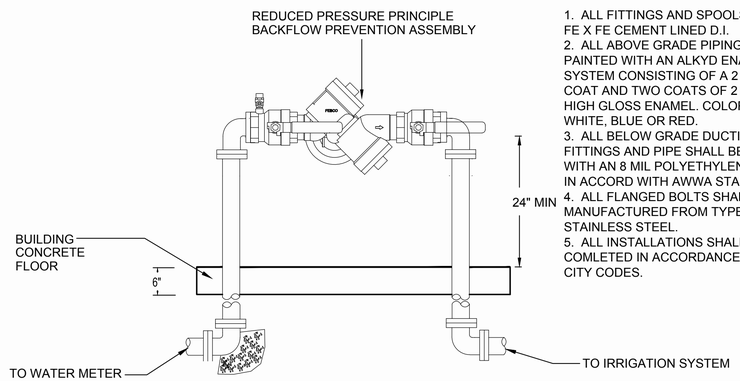

1. ALL FITTINGS AND SPOOLS SHALL BE FE X FE CEMENT LINED D.I.
2. ALL ABOVE GRADE PIPING SHALL BE PAINTED WITH AN ALKYD ENAMEL PAINT SYSTEM CONSISTING OF A 2 MIL PRIMER COAT AND TWO COATS OF 2 MILS (EACH) HIGH GLOSS ENAMEL. COLORS SHALL BE WHITE, BLUE OR RED.
3. ALL BELOW GRADE DUCTILE IRON FITTINGS AND PIPE SHALL BE ENCASED WITH AN 8 MIL POLYETHYLENE WRAP IN ACCORD WITH AWWA STANDARDS.
4. ALL FLANGED BOLTS SHALL BE MANUFACTURED FROM TYPE 316 STAINLESS STEEL.
5. ALL INSTALLATIONS SHALL BE COMLETED IN ACCORDANCE WITH CITY CODES.

1A BACKFLOW PREVENTOR
SECTION
SCALE : NTS

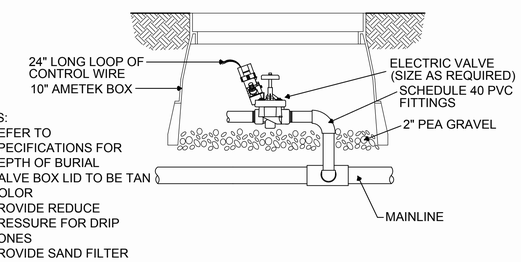

NOTES:
1. REFER TO SPECIFICATIONS FOR DEPTH OF BURIAL
2. VALVE BOX LID TO BE TAN COLOR
3. PROVIDE REDUCE PRESSURE FOR DRIP ZONES
4. PROVIDE SAND FILTER

2A ELECTRIC VALVE
SECTION
SCALE : NTS

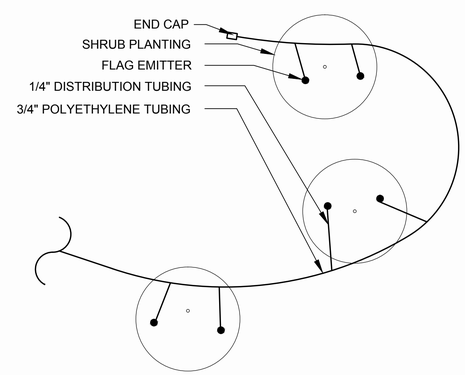

3A DRIP EMITTER LAYOUT
SECTION
SCALE : NONE

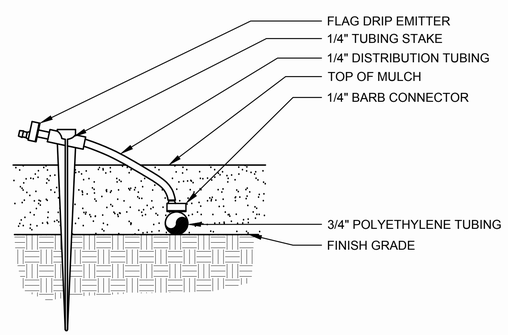

4A DRIP EMITTER ENLARGEMENT
SECTION
SCALE : NONE

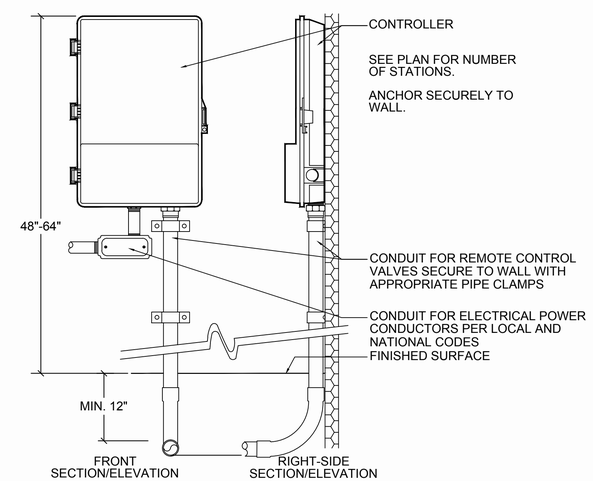

5A WALL MOUNTED CONTROLLER
SECTION
SCALE : NTS

CANNADY
ARCHITECT STUDIO
300 ADAMS STREET SE
505.299.1111 Phone
cannadystudio.com

THIS DRAWING IS THE PROPERTY OF DC ARCHITECT STUDIO AND SHALL NOT BE REPRODUCED OR USED IN ANY MANNER WITHOUT EXPRESSED WRITTEN CONSENT

Project Title
Ladera Self Storage
Tract B1 of Tracts A1 & B1, Mariposa Square Subdivision
Albuquerque, NM 87120

Drawing Title
Landscape Site Plan Details

Documents Issued For:
Site Development Plan for Building Permit

THIS DRAWING IS INCOMPLETE AND NOT TO BE USED FOR CONSTRUCTION UNLESS IT IS STAMPED, SIGNED AND DATED

Print Date: 07.11.18
Job Number: 17.08

Drawing No.
DRB.04