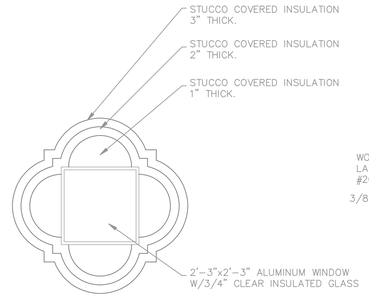

D3 WINDOW DETAIL
1/2" = 1'-0"

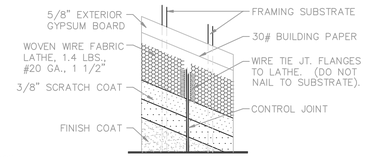

D4 STUCCO CONTROL JOINT
NTS

KEYNOTES

1. 24 GAUGE RIDGE CAP
2. 24 GAUGE PREFINISHED ROOF PANEL (ALLAINCE SEAM 24)
3. 4"x6" PREFINISHED METAL GUTTER, BY METAL BUILDING MANUFACT.
4. 4"x4" PREFINISHED METAL DOWNSPOUT.
5. 2 COAT STUCCO WITH 20 GAUGE MESH, EL REY COLOR:
6. ALUMINUM FIXED WINDOW 3'-0" x 6'-0"
7. 3 COAT STUCCO WITH 17 GAUGE MESH, EL REY COLOR:
8. 24 GAUGE FASCIA BY METAL BUILDING MANUFACTURER.
9. OVERHEAD GARAGE DOOR WITH SAFETY GLASS, SEE SPEC. SECTION 08360.
10. HOLLOW METAL DOOR AND FRAME.
11. STUCCO CONTROL JOINT, SEE DETAIL THIS SHEET.
12. 26 GAUGE PREFINISHED METAL PARAPET CAP.
13. 2'-3"x2'-3" FIXED ALUMINUM WINDOW.
14. 2'-8"x2'-8" FIXED ALUMINUM WINDOW.
15. KITCHEN EXHAUST FAN (KEF) ON 20" CURB, SEE MECHANICAL.
16. CONTINUE FLASHING UP AND UNDER STUCCO AT LEAST 8". SEE DETAIL A4/A301.

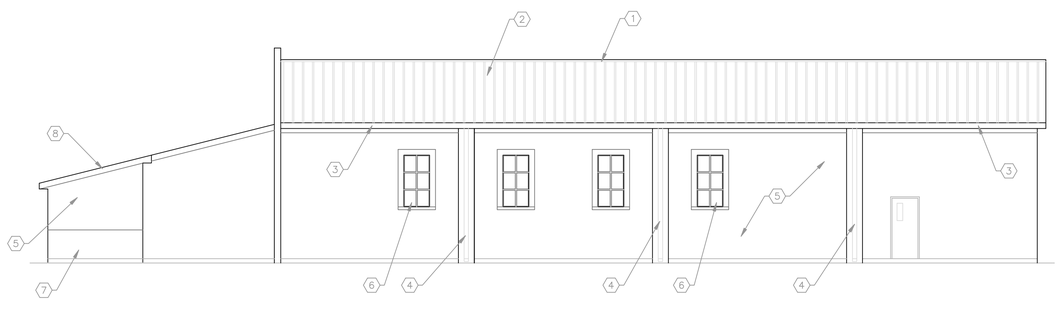

B1 NORTH ELEVATION
1/8"=1'-0"

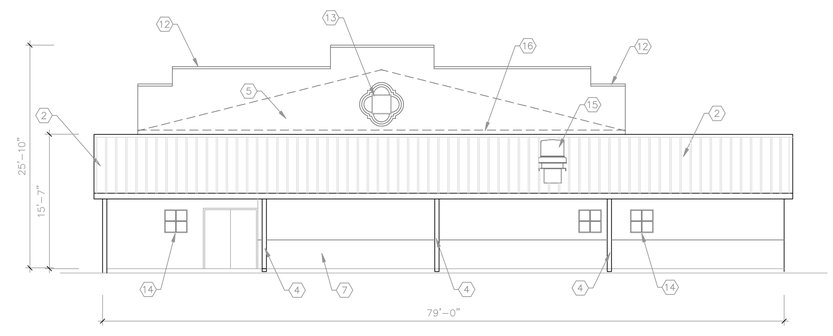

B4 EAST ELEVATION
1/8"=1'-0"

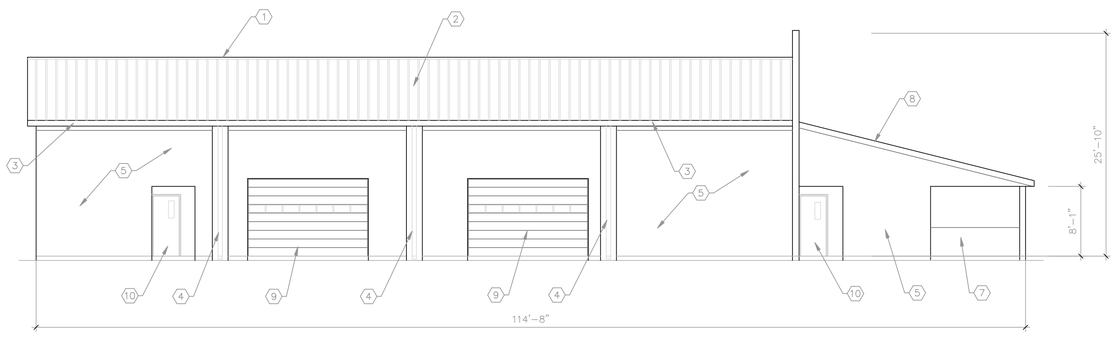

A1 SOUTH ELEVATION
1/8"=1'-0"

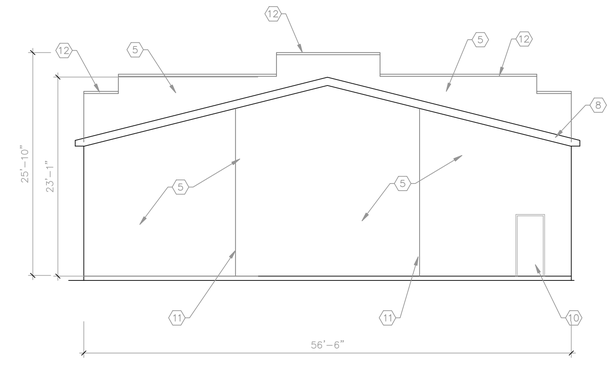

A4 WEST ELEVATION
1/8"=1'-0"

SOLEIL WEST
Architecture Planning Interior Design Engineering
PO BOX 23372
Albuquerque, NM 87192
tel (505) 250-3053
Conscious Design for the Environment
architects@soleilwest.com www.soleilwest.com

Original drawings remain the property of the Architect and as such the Architect retains total ownership and control. The design represented by these drawings is sold to the client for a one time use, unless otherwise agreed upon in writing by the Architect.

PROFESSIONAL SEAL
STATE OF NEW MEXICO
KEVIN R. BALCIAR
No. 1882
REGISTERED ARCHITECT
6.11.2018

CONSULTANT

PROJECT NAME

SAN JOSÉ CATHOLIC CHURCH
PARISH HALL

SAN JOSÉ CATHOLIC CHURCH
2401 BROADWAY BLVD SE
ALBUQUERQUE, NM 87102

MARK	DATE	DESCRIPTION

PROJECT NUMBER	1721
DRAWN BY	jab
CHECKED BY	KRB
ISSUE DATE	6-11-18
FILE NAME: 1724_A-201 EXTERIOR ELEV.DWG	

SHEET NAME
EXTERIOR ELEVATIONS

SHEET NUMBER
A-201