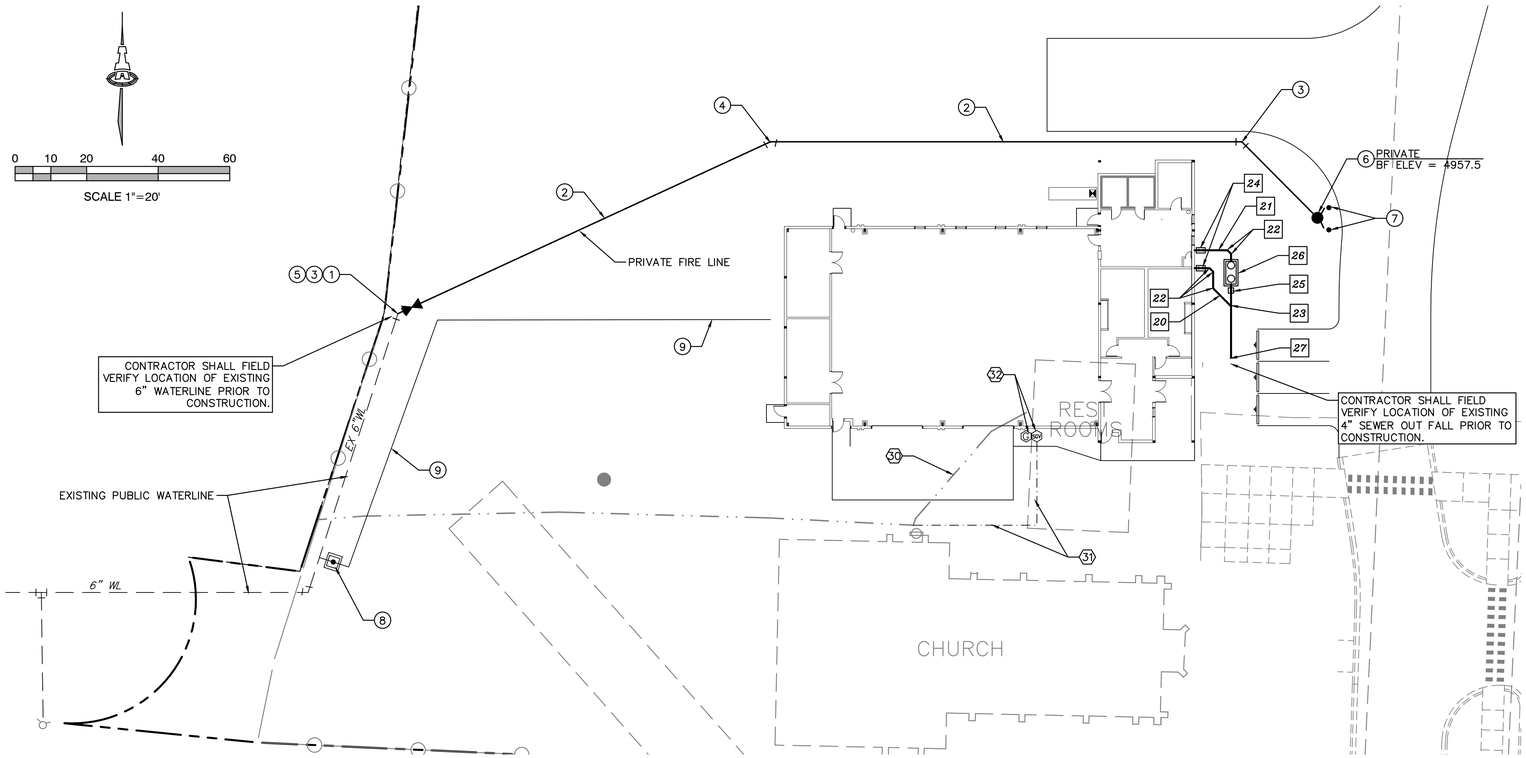

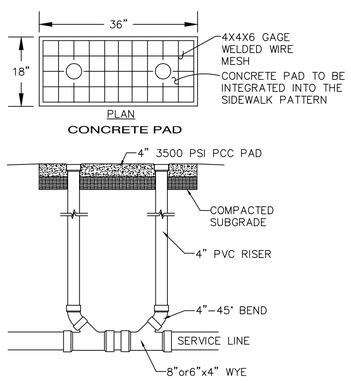

DOUBLE CLEANOUT DETAIL
NTS

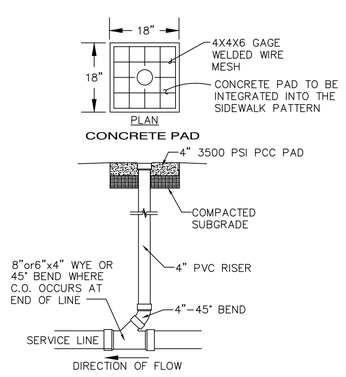

SINGLE CLEANOUT DETAIL
NTS

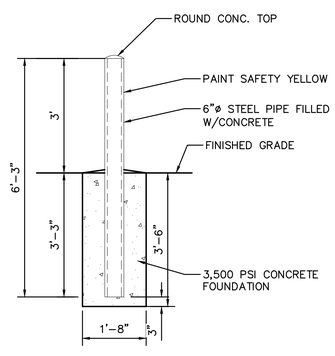

BOLLARD DETAIL
NTS

RESTRAINED JOINT CRITERIA FOR WATERLINE FITTINGS

NOTES:

1. ALL MECHANICAL JOINTS SHALL BE RESTRAINED AT THE FITTING.
2. THE CONTRACTOR SHALL PROVIDE A MINIMUM PIPE LENGTH OF 20 LF FROM ALL MECHANICAL JOINTS. ALL PIPE JOINTS WITHIN 20 LF OF A MECHANICAL JOINT SHALL BE RESTRAINED AT THE CONTRACTOR'S EXPENSE.
3. THE CONTRACTOR SHALL RESTRAIN ALL PIPE JOINTS IN THE SPECIFIED DISTANCE LISTED IN THE TABLE ON THIS SHEET.
4. THE CONTRACTOR SHALL RESTRAIN ALL FIRE HYDRANT JOINTS FROM THE TEE ON THE MAIN TO THE FIRE HYDRANT FLANGE.

DEPTH OF BURY:	3.0 FT. MINIMUM
FACTOR OF SAFETY:	1.50
MATERIAL:	PVC
SOIL TYPE:	GM/SM – SILTY GRAVELS AND SILTY SANDS, GRAVEL–SAND–SILT MIXTURES.
TEST PRESSURE:	150 PSI
TRENCH TYPE 4:	PIPE BEDDED IN SAND, GRAVEL, OR CRUSHED STONE TO DEPTH OF 1/8 PIPE DIAMETER, 4 INCH MINIMUM; BACKFILL COMPACTED TO TOP OF PIPE.

DIFFERENT CRITERIA, E.G., GREATER DEPTH OF BURY, ETC., WILL REQUIRE DIFFERENT RESTRAINED LENGTHS. THESE MUST BE CALCULATED BY A QUALIFIED PROFESSIONAL ENGINEER AND APPROVED BY CITY OF RIO RQANCHO.

KEYED NOTES

WATER KEYED NOTES

1. REMOVE EXISTING TEE. CONNECT NEW 6" WATERLINE.
2. 6" WATERLINE.
3. 6" 45° BEND. (LT=9')
4. 6" 22 1/2° BEND. (LT=2')
5. 6" GATE VALVE W/ BOX PER ABCWUA STD DWG 2326 & 2329. (LT=46')
6. PRIVATE FIRE HYDRANT PER ABCWUA STD DWG 2340. PAINTED SAFETY ORANGE.
7. BOLLARDS PER DETAIL THIS SHEET.
8. 1 ½" METER ASSEMBLY PER ABCWUA STD DWG 2363.
9. 1 ½" WATER SERVICE LINE.

SEWER

20. 4" SANITARY SEWER LINE, AT 2% MIN. SLOPE.
21. 4" GREASE LINE, AT 2% MIN. SLOPE.
22. 4" 45° BEND.
23. 4" WYE/TEE.
24. DOUBLE CLEAN OUT.
25. SINGLE CLEAN OUT.
26. 500 GALLON GREASE INTERCEPTOR.
27. CONNECT NEW 4" SERVICE LINE TO EXISTING SEWER LINE FROM EXISTING RESTROOMS.

GAS

30. REMOVE AND DISPOSE EXISTING GAS LINE.
31. EXTEND NEW GAS LINE FROM EXISTING METER AT CHURCH TO NEW METER AT PARISH HALL.
32. NEW GAS METER TO BE COORDINATED WITH NM GAS CO. WITH EMERGENCY SEISMIC SHUT OFF VALVE (SGV) AS REQUIRED BY NM GAS CO.

GENERAL NOTES

1. EXISTING UTILITY LINES ARE SHOWN IN AN APPROXIMATE MANNER ONLY AND MAY BE INCOMPLETE OR OBSOLETE. SUCH LINES MAY OR MAY NOT EXIST WHERE SHOWN OR NOT SHOWN. ALL UTILITIES SHOULD BE FIELD VERIFIED AND LOCATED BY THE CONTRACTOR PRIOR TO COMMENCEMENT OF ANY CONSTRUCTION. THE CONTRACTOR IS FULLY RESPONSIBLE FOR ANY AND ALL DAMAGE CAUSED BY ITS FAILURE TO LOCATE, IDENTIFY AND PRESERVE ANY AND ALL EXISTING UTILITIES, PIPELINES, AND UNDERGROUND UTILITY LINES.
2. CONTRACTOR SHALL NOT USE VIBRATORY COMPACTION EQUIPMENT OR HEAVY VEHICLES OVER EXISTING UTILITIES.
3. SITE STORM DRAIN, ELECTRIC LINES & TRANSFORMERS AND GAS LINES ARE SHOWN FOR GENERAL INFORMATION ONLY TO PROVIDE AN OVERVIEW OF SITE UTILITIES AND POTENTIAL CONFLICTS. SEE MECHANICAL PLANS FOR GAS LINE SIZING. SEE CG-101 FOR STORM DRAIN DESIGN.
4. ALL WATER FITTINGS SHALL HAVE JOINT RESTRAINTS (LT). SEE RESTRAINED JOINT CRITERIA NOTES THIS SHEET. (LT) LENGTH SHOWN ON KEYED NOTES.
5. ALL ABOVE GROUND UTILITY EQUIPMENT AND FITTINGS SHALL BE PAINTED IN COLORS TO MATCH BUILDING COLORS.

UTILITY GENERAL NOTES

A. THE CONTRACTOR SHALL BE RESPONSIBLE FOR THE COMPLETE INSTALLATION OF ALL WORK RELATED TO PROPOSED UTILITIES SHOWN ON THIS PLAN INCLUDING: TRENCHING, BACKFILL, SUPPORTS, CLEANOUT PADS, SERVICE STOPS AND BOXES, SERVICE LINES, TESTING, CLEANING, AND STERILIZING. ANY WORK NOT ACCEPTED BY THE ARCHITECT OR ENGINEER DUE TO IMPROPER WORKMANSHIP OR LACK OF PROPER COORDINATION SHALL BE REMOVED AND CORRECTLY INSTALLED AT THE CONTRACTOR'S EXPENSE, AS DIRECTED.

B. MINIMUM COVER SHALL BE 36" FOR WATERLINES AND 48" FOR SANITARY SEWER, EXCEPT AT BUILDING CONNECTIONS.

C. UTILITY LINES SHALL BE INSTALLED AFTER COMPLETION OF THE SITE ROUGH GRADING.

D. UTILITY LINES SHALL BE INSTALLED PRIOR TO SURFACE IMPROVEMENTS SUCH AS PAVEMENT, SIDEWALKS, AND LANDSCAPING.

E. CONTRACTOR SHALL BE RESPONSIBLE FOR CONNECTIONS TO BUILDING PLUMBING AND ALL NECESSARY FITTINGS. FITTING COSTS SHALL BE INCIDENTAL. REFER TO THE MECHANICAL AND/OR PLUMBING PLANS FOR SERVICE CONNECTIONS.

F. DRY UTILITY LOCATIONS AND DESIGN ARE NOT A PART OF THIS PLAN. CONTRACTOR SHALL COORDINATE WITH THE LOCAL DRY UTILITY COMPANIES TO DETERMINE THE SIZE, DEPTH, LOCATION, FITTINGS AND REQUIRED APPURTENANCES FOR THE DRY UTILITY SERVICE LINES ON THE SITE. REFER TO MECHANICAL AND ELECTRICAL PLANS FOR SERVICE CONNECTIONS.

G. TRENCHING, BORING, AND JACKING SHALL BE CONSTRUCTED IN ACCORDANCE WITH COA SPEC. SECT. 700. ALL BACKFILL SHALL BE COMPACTED TO A MINIMUM 95% DENSITY PER ASTM D-1557.

H. ALL WATER VALVE BOXES, MANHOLE RINGS & COVERS, AND OTHER SURFACE ITEMS FOR THE UTILITIES SHALL BE ADJUSTED TO FINISHED GRADE.

I. ALL CROSSINGS OF WATER AND SEWER LINES SHALL HAVE 12" MIN CLEARANCE. IF 12" CLEARANCE IS NOT POSSIBLE, BOTH PIPES SHALL BE ENCASED IN CONCRETE OR AS DIRECTED BY THE ENGINEER.

J. VALVES, METERS, SERVICE LINES, METER AND VALVE BOXES, TAPPING SLEEVES, HYDRANTS, AND OTHER WATER APPURTENANCES SHALL BE CONSTRUCTED IN ACCORDANCE WITH COA SPEC. SECT. 800.

K. WATERLINES LESS THAN 4" DIAMETER SHALL BE COPPER TYPE K MEETING ASTM B 88 REQUIREMENTS. WATERLINES 4" IN DIAMETER OR LARGER SHALL BE PVC PIPE MEETING AWWA C900 DR-18 REQUIREMENTS.

L. ALL FITTINGS AND COUPLINGS FOR WATERLINES LESS THAN 4" IN DIAMETER ARE TO BE COPPER, SOLDER JOINT FITTINGS IN ACCORDANCE WITH ASME 16.18 OR ASME B16.22.

M. ALL FITTINGS AND COUPLINGS FOR WATERLINES 4" IN DIAMETER OR LARGER ARE TO BE MEGA LUG MECHANICAL JOINTS OR ENGINEER APPROVED EQUIVALENT.

N. JOINTS SHALL BE RESTRAINED BY MEGA LUG HARNESSES, OR ENGINEER APPROVED EQUIVALENT. JOINT RESTRAINTS SHALL BE INSTALLED AT DISTANCES FROM THE FITTINGS AS SHOWN ON THE JOINT RESTRAINT TABLE IN THESE PLANS.

O. BACKFLOW PREVENTERS SHALL BE INSTALLED IN ACCORDANCE WITH MANUFACTURER'S RECOMMENDATIONS.

P. FIRE LINES SHALL USE PIPE MATERIALS LISTED AND APPROVED FOR FIRE SERVICE BY UNDERWRITERS LABORATORIES.

Q. FIRE DEPARTMENT CONNECTIONS SHALL MEET UL 405, NFPA 1963, AND LOCAL FIRE DEPARTMENT REQUIREMENTS.

R. ADJUST WATER AND FIRE LINES TO AVOID FOOTINGS, SEWER LINES, AND OTHER CONDUITS. INSTALL FITTINGS AS NEEDED.

S. SEWER MANHOLES, CLEANOUTS, SEWER SERVICE TAPS, AND OTHER SEWER APPURTENANCES SHALL BE CONSTRUCTED IN ACCORDANCE WITH COA SPEC. SECT. 900 / APWA SPEC. SECT. 900 / LOCAL UTILITY COMPANY SPECIFICATIONS

T. SEWER SERVICE LINES SHALL BE INSTALLED AT A 2% MINIMUM SLOPE, UNLESS OTHERWISE SPECIFIED ON THE PLANS. THE PIPE SHALL DRAIN AT A CONSTANT SLOPE BETWEEN FITTINGS. THE PIPE SHALL DRAIN TOWARD THE SEWER MAIN AT ALL LOCATIONS.

U. ALL SANITARY SEWER LINE MATERIALS SHALL BE PVC SDR-35 PIPE.

SOLEIL WEST
Architecture Planning Interior Design Engineering
2625 Pennsylvania St NE, Suite 600
Albuquerque, NM 87110
tel (505) 293-1477
Conscious Design for the Environment
architects@soleilwest.com www.soleilwest.com

Original drawings remain the property of the Architect and as such the Architect retains total ownership and control. The design represented by these drawings is sold to the client for a one time use, unless otherwise agreed upon in writing by the Architect.

PROFESSIONAL SEAL

FRED C. ARFMAN NEW MEXICO 7322 LICENSED PROFESSIONAL ENGINEER
05.25.18

ISAACSON & ARFMAN, P.A.
Consulting Engineering Associates
128 Monroe Street N.E.
Albuquerque, New Mexico 87108
Ph. 505-268-8828 www.iacivil.com

2270 CU-101.dwg Oct 11,2018

PROJECT NAME

SAN JOSÉ CATHOLIC CHURCH
PARISH HALL

SAN JOSÉ CATHOLIC CHURCH
2401 BROADWAY BLVD SE
ALBUQUERQUE, NM 87102

MARK	DATE	DESCRIPTION

PROJECT NUMBER
DRAWN BY
CHECKED BY
ISSUE DATE

SHEET NAME

SITE UTILITY PLAN

SHEET NUMBER

CU-101

811 Know what's below. Call before you dig.