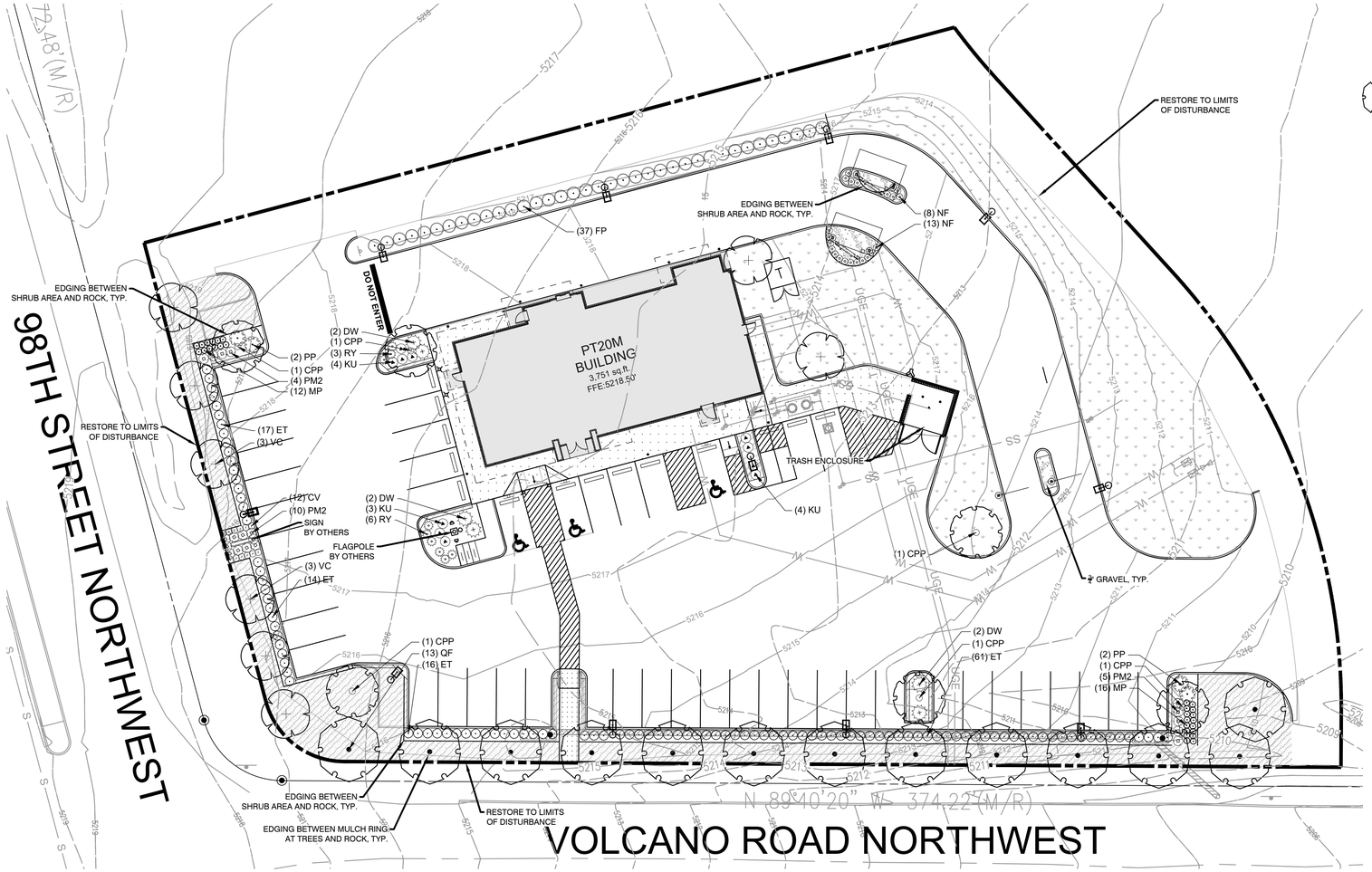


## PLANT SCHEDULE

| TREES | CODE | QTY | BOTANICAL / COMMON NAME | CONT | CAL | SIZE |
|---|---|---|---|---|---|---|
| | CPP | 6 | PISTACEA CHINESE<br>CHINESE PISTACHE | CONT. | 3"CAL | MIN. 12` HT. |
| | QF | 13 | QUERCUS FUSIFORMIS<br>ESCARPMENT LIVE OAK | CONT. | 3" CAL MIN | 12` HT MIN |
| | VC | 8 | VITEX AGNUS-CASTUS<br>CHASTE TREE | CONT. | 3"CAL | 10-12` HT. |

| SHRUBS | CODE | QTY | BOTANICAL / COMMON NAME | CONT | SPACING |
|---|---|---|---|---|---|
| | CV | 12 | COREOPSIS VERTICILLATA 'MOONBEAM'<br>MOONBEAM TICKSEED | 1 GAL | 24" OC |
| | DW | 6 | DASYLIRION WHEELERI<br>GREY DESERT SPOON | 5 GAL | SEE PLAN |
| | ET | 108 | ERICAMERIA LARICIFOLIA<br>TURPENTINE BUSH | 5 GAL | 36" OC |
| | FP | 37 | FALLUGIA PARADOXA<br>APACHE PLUME | 5 GAL | 48" OC |
| | RY | 9 | HESPERALOE PARVIFLORA<br>RED YUCCA | 5 GAL | 30" OC |
| | KU | 11 | KNIPHOFIA UVARIA<br>RED HOT POKER | 3 GAL | 36" OC |
| | NF | 21 | NEPETA X FAASSENII<br>CATMINT | 1 GAL | 24" OC |
| | PM2 | 19 | POTENTILLA FRUTICOSA `MANGO TANGO`<br>MANGO TANGO BUSH CINQUEFOIL | 5 GAL | 36" OC |

| GROUNDCOVER | CODE | QTY | BOTANICAL / COMMON NAME | CONT | SPACING |
|---|---|---|---|---|---|
| | PP | 4 | PRUNUS BESSEYI 'P011S' TM<br>PAWNEE BUTTES SAND CHERRY | 3 GAL | 60" OC |

| ORNAMENTAL GRASSES | CODE | QTY | BOTANICAL / COMMON NAME | CONT | SPACING |
|---|---|---|---|---|---|
| | MP | 28 | MUHLENBERGIA X 'PINK FLAMINGO'<br>PINK FLAMINGO MUHLY | 1 GAL | 24" OC |

| GROUND COVERS | CODE | QTY | BOTANICAL / COMMON NAME |
|---|---|---|---|
| | DGG2 | 177 SF | 3/4" GRAVEL<br>COLOR: GREY TO MATCH EXISTING |
| | BUF | 7,633 SF | BUCHLOE DACTYLOIDES `609'<br>BUFFALO GRASS |
| | DGG | 4,698 SF | DECOMPOSED GRANITE GRAVEL<br>COLOR: GRAY TO MATCH EXISTING |

CURTIS AND CURTIS SEED
4500 N Prince Street (877) 907-1806
Clovis, NM 88101, USA seed@curtisseed.com

NOTE: ALL TREES SHALL BE CONTAINER-GROWN, CONTAINER SIZE AS APPROPRIATE FOR THE CALIPER SPECIFIED. SEE SPECIFICATIONS FOR PROPER ROOT QUALITY.

NORTH

0' 10' 20' 40'

Scale 1" = 20'

NOTE: PRINTED DRAWING SIZE MAY HAVE CHANGED FROM ORIGINAL. VERIFY SCALE USING BAR SCALE ABOVE.

## GENERAL PLANTING NOTES

1. BY SUBMITTING A PROPOSAL FOR THE LANDSCAPE PLANTING SCOPE OF WORK, THE CONTRACTOR CONFIRMS THAT HE HAS READ, AND WILL COMPLY WITH, THE ASSOCIATED NOTES, SPECIFICATIONS, AND DETAILS WITH THIS PROJECT, INCLUDING ALL APPLICABLE JURISDICTION REQUIREMENTS.
2. THE CONTRACTOR SHALL VERIFY ALL EXISTING AND PROPOSED SITE ELEMENTS AND NOTIFY THE OWNER OF ANY DISCREPANCIES.
3. THE CONTRACTOR SHALL LOCATE ALL EXISTING UNDERGROUND UTILITIES AND NOTIFY OWNER OF ANY CONFLICTS. UTILITY LOCATIONS SHOWN ARE APPROXIMATE AND THE DESIGNER DOES NOT GUARANTEE THAT LOCATIONS SHOWN ARE EXACT. CONTRACTOR SHALL EXERCISE CAUTION WHEN WORKIGN IN THE VICINITY OF UNDERGROUND UTILITIES.
4. THE GENERAL CONTRACTOR IS RESPONSIBLE FOR REMOVING ALL EXISTING VEGETATION (EXCEPT WHERE NOTED TO REMAIN).
5. ALL PLANT LOCATIONS ARE DIAGRAMMATIC. ACTUAL LOCATIONS SHALL BE VERIFIED WITH THE OWNER OR OWNER'S REPRESENTATIVE PRIOR TO PLANTING. THE LANDSCAPE CONTRACTOR SHALL ENSURE THAT ALL REQUIREMENTS OF THE PERMITTING AUTHORITY ARE MET (I.E., MINIMUM PLANT QUANTITIES, PLANTING METHODS, TREE PROTECTION METHODS, ETC.).
   a. THE LANDSCAPE CONTRACTOR IS RESPONSIBLE FOR DETERMINING PLANT QUANTITIES; PLANT QUANTITIES SHOWN ON LEGENDS AND CALLOUTS ARE FOR GENERAL INFORMATION ONLY. IN THE EVENT OF A DISCREPANCY BETWEEN THE PLAN AND THE PLANT LEGEND, THE PLANT QUANTITY AS SHOWN ON THE PLAN (FOR INDIVIDUAL SYMBOLS) OR CALLOUT (FOR GROUNDCOVER PATTERNS) SHALL TAKE PRECEDENCE.
   b. NO SUBSTITUTIONS OF PLANT MATERIALS SHALL BE ALLOWED WITHOUT THE WRITTEN PERMISSION OF THE LANDSCAPE ARCHITECT. IF SOME OF THE PLANTS ARE NOT AVAILABLE, THE LANDSCAPE CONTRACTOR SHALL NOTIFY THE OWNER OR OWNER'S REPRESENTATIVE IN WRITING (VIA PROPER CHANNELS).
   c. THE CONTRACTOR SHALL, AT A MINIMUM, PROVIDE REPRESENTATIVE PHOTOS OF ALL PLANTS PROPOSED FOR THE PROJECT. THE CONTRACTOR SHALL ALLOW THE OWNER OR OWNER'S REPRESENTATIVE TO INSPECT, AND APPROVE OR REJECT, ALL PLANTS DELIVERED TO THE JOBSITE. REFER TO SPECIFICATIONS FOR ADDITIONAL REQUIREMENTS FOR SUBMITTALS.
6. THE CONTRACTOR SHALL MAINTAIN THE LANDSCAPE IN A HEALTHY CONDITION FOR 90 DAYS AFTER ACCEPTANCE BY THE OWNER. REFER TO SPECIFICATIONS FOR CONDITIONS OF ACCEPTANCE FOR THE START OF THE MAINTENANCE PERIOD, AND FOR FINAL ACCEPTANCE AT THE END OF THE MAINTENANCE PERIOD.
7. PROVIDE AND INSTALL BUFFALO GRASS IN ALL DISTURBED AREAS OUTSIDE OF PROPERTY LIMITS.
8. SEE SPECIFICATIONS AND DETAILS FOR FURTHER REQUIREMENTS.

## MULCHES

AFTER ALL PLANTING IS COMPLETE, CONTRACTOR SHALL INSTALL 3" LAYER OF DOUBLE SHREDDED HARDWOOD MULCH, NATURAL (UNDYED), IN ALL PLANTING AREAS (EXCEPT FOR TURF AREAS). ABSOLUTELY NO EXPOSED GROUND SHALL BE LEFT SHOWING ANYWHERE ON THE PROJECT AFTER MULCH HAS BEEN INSTALLED (SUBJECT TO THE CONDITIONS AND REQUIREMENTS OF THE "GENERAL GRADING AND PLANTING NOTES" AND SPECIFICATIONS).

## BUFFALO GRASS INSTALLATION

CONTRACTOR SHALL VERIFY WITH THE SOD SUPPLIER THE WATERING SCHEDULE FOR NEWLY INSTALLED BUFFALOGRASS SOD. THE CONTRACTOR SHALL REPLACE ANY SECTIONS OF SOD, AT NO CHARGE TO THE PROPERTY OWNER, WHICH FAIL TO THRIVE DUE TO IMPROPER WATERING.

## IRRIGATION CONCEPT

1. AN AUTOMATIC IRRIGATION SYSTEM SHALL BE INSTALLED AND OPERATIONAL BY THE TIME OF FINAL INSPECTION. THE ENTIRE IRRIGATION SYSTEM SHALL BE INSTALLED BY A LICENSED AND QUALIFIED IRRIGATION CONTRACTOR.
2. THE IRRIGATION SYSTEM WILL OPERATE ON POTABLE WATER, AND THE SYSTEM WILL HAVE APPROPRIATE BACKFLOW PREVENTION DEVICES INSTALLED TO PREVENT CONTAMINATION OF THE POTABLE SOURCE.
3. ALL NON-TURF PLANTED AREAS SHALL BE DRIP IRRIGATED. SODDED AND SEEDED AREAS SHALL BE IRRIGATED WITH SPRAY OR ROTOR HEADS AT 100% HEAD-TO-HEAD COVERAGE.
4. ALL PLANTS SHARING SIMILAR HYDROZONE CHARACTERISTICS SHALL BE PLACED ON A VALVE DEDICATED TO PROVIDE THE NECESSARY WATER REQUIREMENTS SPECIFIC TO THAT HYDROZONE.
5. THE IRRIGATION SYSTEM SHALL BE DESIGNED AND INSTALLED, TO THE MAXIMUM EXTENT POSSIBLE, TO CONSERVE WATER BY USING THE FOLLOWING DEVICES AND SYSTEMS: MATCHED PRECIPITATION RATE TECHNOLOGY ON ROTOR AND SPRAY HEADS (WHEREVER POSSIBLE), RAIN SENSORS, AND MULTI-PROGRAM COMPUTERIZED IRRIGATION CONTROLLERS FEATURING SENSORY INPUT CAPABILITIES.

## LANDSCAPE CALCULATIONS

| | |
|---|---|
| NET SITE AREA: | 63,496 SF |
| LANDSCAPE AREA REQUIRED: | 9,524 SF (15% OF SITE AREA) |
| LANDSCAPE AREA PROVIDED: | 15,616 SF (24.6% OF SITE AREA) |
| STREET FRONTAGE LANDSCAPING | |
| FRONTAGE LENGTH - 98th STREET: | 146 LF |
| STREET TREES REQUIRED: | 6 TREES (1 PER 25 LF OF FRONTAGE) |
| STREET TREES PROVIDED: | 6 TREES |
| FRONTAGE LENGTH - VOLCANO RD: | 307 LF |
| STREET TREES REQUIRED: | 13 TREES (1 PER 25 LF OF FRONTAGE) |
| STREET TREES PROVIDED: | 13 TREES |
| PARKING LOT LANDSCAPING | |
| PARKING LOT AREA: | 19,686 SF |
| LANDSCAPE AREA REQUIRED: | 1,969 SF (10% OF PARKING AREA) |
| LANDSCAPE AREA PROVIDED: | 2,643 SF (13.4% OF PARKING AREA) |
| TOTAL PARKING SPACES: | 52 SPACES |
| TREES REQUIRED: | 6 TREES (1 TREE PER 10 SPACES) |
| TREES PROVIDED: | 6 TREES |
| FRONT LOT EDGE BUFFER: | |
| SHRUBS REQUIRED: | CONTINUOUS EVERGREEN HEDGE |
| SHRUBS PROVIDED: | AS REQUIRED |
| SIDE LOT EDGE BUFFER (VOLCANO ROAD): | |
| SHRUBS REQUIRED: | 54 (6 PER 25 LF) |
| SHRUBS PROVIDED: | 78 SHRUBS |
| TOTAL LANDSCAPE AREA: | 15,616 SF |
| MINIMUM REQUIRED COVERAGE: | 11,712 SF (75% OF LANDSCAPE AREA) |
| COVERAGE PROVIDED OVERALL: | 11,714 SF (75.0%) |

EVERGREEN DESIGN GROUP
(800) 680-6630
1600 Broadway, Suite 1600
Denver, CO 80202
www.EvergreenDesignGroup.com

Know what's below. Call before you dig.

THE LOCATION OF EXISTING UNDERGROUND UTILITIES ARE SHOWN IN AN APPROXIMATE WAY ONLY. THE CONTRACTOR SHALL DETERMINE THE EXACT LOCATION OF ALL EXISTING UTILITIES BEFORE COMMENCING WORK. CONTRACTOR AGREES TO BE FULLY RESPONSIBLE FOR ANY AND ALL DAMAGES WHICH MIGHT BE OCCASIONED BY THE CONTRACTORS FAILURE TO EXACTLY LOCATE AND PRESERVE ANY AND ALL UNDERGROUND UTILITIES.


Bowman CONSULTING
© Bowman Consulting Group, Ltd.
5601 Democracy Dr., Ste 205
Plano, Texas 75024
Phone: (972) 497-2990
Fax: (512) 324-4062
www.bowman.com


REVISIONS

| REVISION | DESCRIPTION | DATE |
|---|---|---|
| 1 | | |

LANDSCAPE PLAN

# WHATABURGER
## NEC 98TH ST. & VOLCANO RD.
ALBUQUERQUE, NM 87124

STATE OF NEW MEXICO
MARY BATES
627
REGISTERED LANDSCAPE ARCHITECT
01/06/2022

| DESIGN | DRAWN | CHKD |
|---|---|---|
| EMS | EMS | MB |

JOB No. 070426-01-001

SHEET
LP-1

C:\Users\mbate\Dropbox (EDG)\EDG - Shared\2021\Whataburger\Whataburger - Albuquerque NM - 98th & Volcano\Whataburger Alburquerque 98th - LP 2021-12-03.dwg, LP-1, January 06, 2022, 10:14 PM, mbate

# PLANTING SPECIFICATIONS

**GENERAL**

A. QUALIFICATIONS OF LANDSCAPE CONTRACTOR
1. ALL LANDSCAPE WORK SHOWN ON THESE PLANS SHALL BE PERFORMED BY A SINGLE FIRM SPECIALIZING IN LANDSCAPE PLANTING.
2. A LIST OF SUCCESSFULLY COMPLETED PROJECTS OF THIS TYPE, SIZE AND NATURE MAY BE REQUESTED BY THE OWNER FOR FURTHER QUALIFICATION MEASURES.
3. THE LANDSCAPE CONTRACTOR SHALL HOLD A VALID NURSERY AND FLORAL CERTIFICATE ISSUED BY THE APPROPRIATE LOCAL JURISDICTION, AS WELL AS OPERATE UNDER A COMMERCIAL PESTICIDE APPLICATOR LICENSE.

B. SCOPE OF WORK
1. WORK COVERED BY THESE SECTIONS INCLUDES THE FURNISHING AND PAYMENT OF ALL MATERIALS, LABOR, SERVICES, EQUIPMENT, LICENSES, TAXES AND ANY OTHER ITEMS THAT ARE NECESSARY FOR THE EXECUTION, INSTALLATION AND COMPLETION OF ALL WORK, SPECIFIED HEREIN AND / OR SHOWN ON THE LANDSCAPE PLANS, NOTES, AND DETAILS.
2. ALL WORK SHALL BE PERFORMED IN ACCORDANCE WITH ALL APPLICABLE LAWS, CODES AND REGULATIONS REQUIRED BY AUTHORITIES HAVING JURISDICTION OVER SUCH WORK, INCLUDING ALL INSPECTIONS AND PERMITS REQUIRED BY FEDERAL, STATE AND LOCAL AUTHORITIES IN SUPPLY, TRANSPORTATION AND INSTALLATION OF MATERIALS.
3. THE LANDSCAPE CONTRACTOR SHALL VERIFY THE LOCATION OF ALL UNDERGROUND UTILITY LINES (WATER, SEWER, ELECTRICAL, TELEPHONE, GAS, CABLE, TELEVISION, ETC.) PRIOR TO THE START OF ANY WORK.

**PRODUCTS**

A. ALL MANUFACTURED PRODUCTS SHALL BE NEW.
B. CONTAINER AND BALLED-AND-BURLAPPED PLANTS:
1. FURNISH NURSERY-GROWN PLANTS COMPLYING WITH THE AMERICAN STANDARD FOR NURSERY STOCK (ANSI Z60.1-2014). PROVIDE WELL-SHAPED, FULLY BRANCHED, HEALTHY, VIGOROUS STOCK FREE OF DISEASE, INSECTS, EGGS, LARVAE, AND DEFECTS SUCH AS KNOTS, SUN SCALD, INJURIES, ABRASIONS, AND DISFIGUREMENT. ALL PLANTS WITHIN A SPECIES SHALL HAVE SIMILAR SIZE AND SHALL BE OF A FORM TYPICAL FOR THE SPECIES. ALL TREES SHALL BE OBTAINED FROM SOURCES WITHIN 200 MILES OF THE PROJECT SITE, AND WITH SIMILAR CLIMACTIC CONDITIONS.
2. ROOT SYSTEMS SHALL BE HEALTHY, DENSELY BRANCHED ROOT SYSTEMS, NON-POT-BOUND, FREE FROM ENCIRCLING AND/OR GIRDLING ROOTS, AND FREE FROM ANY OTHER ROOT DEFECTS (SUCH AS J-SHAPED ROOTS).
3. TREES MAY BE PLANTED FROM CONTAINERS OR BALLED-AND-BURLAPPED (B&B), UNLESS SPECIFIED ON THE PLANTING LEGEND. BARE-ROOT TREES ARE NOT ACCEPTABLE.
4. ANY PLANT DEEMED UNACCEPTABLE BY THE OWNER OR OWNER'S REPRESENTATIVE SHALL BE IMMEDIATELY REMOVED FROM THE SITE AND SHALL BE REPLACED WITH AN ACCEPTBLE PLANT OF LIKE TYPE AND SIZE AT THE CONTRACTOR'S OWN EXPENSE. ANY PLANTS APPEARING TO BE UNHEALTHY, EVEN IF DETERMINED TO STILL BE ALIVE, SHALL NOT BE ACCEPTED. THE OWNER OR OWNER'S REPRESENTATIVE SHALL BE THE SOLE JUDGES AS TO THE ACCEPTABILITY OF PLANT MATERIAL.
5. ALL TREES SHALL BE STANDARD IN FORM, UNLESS OTHERWISE SPECIFIED. TREES WITH CENTRAL LEADERS WILL NOT BE ACCEPTED IF LEADER IS DAMAGED OR REMOVED. PRUNE ALL DAMAGED TWIGS AFTER PLANTING.
6. CALIPER MEASUREMENTS FOR STANDARD (SINGLE TRUNK) TREES SHALL BE AS FOLLOWS: SIX INCHES ABOVE THE ROOT FLARE FOR TREES UP TO AND INCLUDING FOUR INCHES IN CALIPER, AND TWELVE INCHES ABOVE THE ROOT FLARE FOR TREES EXCEEDING FOUR INCHES IN CALIPER.
7. MULTI-TRUNK TREES SHALL BE MEASURED BY THEIR OVERALL HEIGHT, MEASURED FROM THE TOP OF THE ROOT BALL. WHERE CALIPER MEASUREMENTS ARE USED, THE CALIPER SHALL BE CALCULATED AS ONE-HALF OF THE SUM OF THE CALIPER OF THE THREE LARGEST TRUNKS.
8. ANY TREE OR SHRUB SHOWN TO HAVE EXCESS SOIL PLACED ON TOP OF THE ROOT BALL, SO THAT THE ROOT FLARE HAS BEEN COMPLETELY COVERED, SHALL BE REJECTED.

C. SOD: PROVIDE WELL-ROOTED SOD OF THE VARIETY NOTED ON THE PLANS. SOD SHALL BE CUT FROM HEALTHY, MATURE TURF WITH SOIL THICKNESS OF 3/4" TO 1". EACH PALLET OF SOD SHALL BE ACCOMPANIED BY A CERTIFICATE FROM SUPPLIER STATING THE COMPOSITION OF THE SOD.
D. TOPSOIL: SANDY TO CLAY LOAM TOPSOIL, FREE OF STONES LARGER THAN ½ INCH, FOREIGN MATTER, PLANTS, ROOTS, AND SEEDS.
E. COMPOST: WELL-COMPOSTED, STABLE, AND WEED-FREE ORGANIC MATTER, pH RANGE OF 5.5 TO 8; MOISTURE CONTENT 35 TO 55 PERCENT BY WEIGHT; 100 PERCENT PASSING THROUGH 3/4-INCH SIEVE; SOLUBLE SALT CONTENT OF 5 TO 10 DECISIEMENS/M; NOT EXCEEDING 0.5 PERCENT INERT CONTAMINANTS AND FREE OF SUBSTANCES TOXIC TO PLANTINGS. NO MANURE OR ANIMAL-BASED PRODUCTS SHALL BE USED.
F. FERTILIZER: GRANULAR FERTILIZER CONSISTING OF NITROGEN, PHOSPHORUS, POTASSIUM, AND OTHER NUTRIENTS IN PROPORTIONS, AMOUNTS, AND RELEASE RATES RECOMMENDED IN A SOIL REPORT FROM A QUALIFIED SOIL-TESTING AGENCY (SEE BELOW).
G. MULCH: SIZE AND TYPE AS INDICATED ON PLANS, FREE FROM DELETERIOUS MATERIALS AND SUITABLE AS A TOP DRESSING OF TREES AND SHRUBS.
H. TREE STAKING AND GUYING
1. STAKES: 6' LONG GREEN METAL T-POSTS.
2. GUY AND TIE WIRE: ASTM A 641, CLASS 1, GALVANIZED-STEEL WIRE, 2-STRAND, TWISTED, 0.106 INCH DIAMETER.
3. STRAP CHAFING GUARD: REINFORCED NYLON OR CANVAS AT LEAST 1-1/2 INCH WIDE, WITH GROMMETS TO PROTECT TREE TRUNKS FROM DAMAGE.

I. STEEL EDGING: PROFESSIONAL STEEL EDGING, 14 GAUGE THICK X 4 INCHES WIDE, FACTORY PAINTED DARK GREEN. ACCEPTABLE MANUFACTURERS INCLUDE COL-MET OR APPROVED EQUAL.
J. PRE-EMERGENT HERBICIDES: ANY GRANULAR, NON-STAINING PRE-EMERGENT HERBICIDE THAT IS LABELED FOR THE SPECIFIC ORNAMENTALS OR TURF ON WHICH IT WILL BE UTILIZED. PRE-EMERGENT HERBICIDES SHALL BE APPLIED PER THE MANUFACTURER'S LABELED RATES.

**METHODS**

A. SOIL PREPARATION
1. BEFORE STARTING WORK, THE LANDSCAPE CONTRACTOR SHALL VERIFY THAT THE GRADE OF ALL LANDSCAPE AREAS ARE WITHIN +/-0.1' OF FINISH GRADE. THE CONTRACTOR SHALL NOTIFY THE OWNER IMMEDIATELY SHOULD ANY DISCREPANCIES EXIST.
2. SOIL TESTING:
   a. AFTER FINISH GRADES HAVE BEEN ESTABLISHED, CONTRACTOR SHALL HAVE SOIL SAMPLES FROM THE PROJECT'S LANDSCAPE AREAS TESTED BY AN ESTABLISHED SOIL TESTING LABORATORY. EACH SAMPLE SUBMITTED TO THE LAB SHALL CONTAIN NO LESS THAN ONE QUART OF SOIL, TAKEN FROM BETWEEN THE SOIL SURFACE AND 6" DEPTH. IF NO SAMPLE LOCATIONS ARE INDICATED ON THE PLANS, THE CONTRACTOR SHALL TAKE A MINIMUM OF THREE SAMPLES FROM VARIOUS REPRESENTATIVE LOCATIONS FOR TESTING.
   b. THE CONTRACTOR SHALL HAVE THE SOIL TESTING LABORATORY PROVIDE RESULTS FOR THE FOLLOWING: SOIL TEXTURAL CLASS, GENERAL SOIL FERTILITY, pH, ORGANIC MATTER CONTENT, SALT (CEC), LIME, SODIUM ADSORPTION RATIO (SAR) AND BORON CONTENT.
   c. THE CONTRACTOR SHALL ALSO SUBMIT THE PROJECT'S PLANT LIST TO THE LABORATORY ALONG WITH THE SOIL SAMPLES.
   d. THE SOIL REPORT PRODUCED BY THE LABORATORY SHALL CONTAIN RECOMMENDATIONS FOR THE FOLLOWING (AS APPROPRIATE): SEPARATE SOIL PREPARATION AND BACKFILL MIX RECOMMENDATIONS FOR GENERAL ORNAMENTAL PLANTS, XERIC PLANTS, TURF, AND NATIVE SEED, AS WELL AS PRE-PLANT FERTILIZER APPLICATIONS AND RECOMMENDATIONS FOR ANY OTHER SOIL RELATED ISSUES. THE REPORT SHALL ALSO PROVIDE A FERTILIZER PROGRAM FOR THE ESTABLISHMENT PERIOD AND FOR LONG-TERM MAINTENANCE.
3. THE CONTRACTOR SHALL INSTALL SOIL AMENDMENTS AND FERTILIZERS PER THE SOILS REPORT RECOMMENDATIONS. ANY CHANGE IN COST DUE TO THE SOIL REPORT RECOMMENDATIONS, EITHER INCREASE OR DECREASE, SHALL BE SUBMITTED TO THE OWNER WITH THE REPORT.
4. FOR BIDDING PURPOSES ONLY, THE SOIL PREPARATION SHALL CONSIST OF THE FOLLOWING:
   a. TURF: INCORPORATE THE FOLLOWING AMENDMENTS INTO THE TOP 8" OF SOIL BY MEANS OF ROTOTILLING AFTER CROSS-RIPPING:
      i. NITROGEN STABILIZED ORGANIC AMENDMENT - 4 CU. YDS. PER 1,000 S.F.
      ii. PREPLANT TURF FERTILIZER (10-20-10 OR SIMILAR, SLOW RELEASE, ORGANIC) - 15 LBS PER 1,000 S.F.
      iii. "CLAY BUSTER" OR EQUAL - USE MANUFACTURER'S RECOMMENDED RATE
   b. TREES, SHRUBS, AND PERENNIALS: INCORPORATE THE FOLLOWING AMENDMENTS INTO THE TOP 8" OF SOIL BY MEANS OF ROTOTILLING AFTER CROSS-RIPPING:
      i. NITROGEN STABILIZED ORGANIC AMENDMENT - 4 CU. YDS. PER 1,000 S.F.
      ii. 12-12-12 FERTILIZER (OR SIMILAR, ORGANIC, SLOW RELEASE) - 10 LBS. PER CU. YD.
      iii. "CLAY BUSTER" OR EQUAL - USE MANUFACTURER'S RECOMMENDED RATE
      iv. IRON SULPHATE - 2 LBS. PER CU. YD.
5. IN THE CONTEXT OF THESE PLANS, NOTES, AND SPECIFICATIONS, "FINISH GRADE" REFERS TO THE FINAL ELEVATION OF THE SOIL SURFACE (NOT TOP OF MULCH) AS INDICATED ON THE GRADING PLANS.
   a. BEFORE STARTING WORK, THE LANDSCAPE CONTRACTOR SHALL VERIFY THAT THE ROUGH GRADES OF ALL LANDSCAPE AREAS ARE WITHIN +/-0.1' OF FINISH GRADE. SEE SPECIFICATIONS FOR MORE DETAILED INSTRUCTION ON TURF AREA AND PLANTING BED PREPARATION.
   b. CONSTRUCT AND MAINTAIN FINISH GRADES AS SHOWN ON GRADING PLANS, AND CONSTRUCT AND MAINTAIN SLOPES AS RECOMMENDED BY THE GEOTECHNICAL REPORT. ALL LANDSCAPE AREAS SHALL HAVE POSITIVE DRAINAGE AWAY FROM STRUCTURES AT THE MINIMUM SLOPE SPECIFIED IN THE REPORT AND ON THE GRADING PLANS, AND AREAS OF POTENTIAL PONDING SHALL BE REGRADED TO BLEND IN WITH THE SURROUNDING GRADES AND ELIMINATE PONDING POTENTIAL.
   c. THE LANDSCAPE CONTRACTOR SHALL DETERMINE WHETHER OR NOT THE EXPORT OF ANY SOIL WILL BE NEEDED, TAKING INTO ACCOUNT THE ROUGH GRADE PROVIDED, THE AMOUNT OF SOIL AMENDMENTS TO BE ADDED (BASED ON A SOIL TEST, PER SPECIFICATIONS), AND THE FINISH GRADES TO BE ESTABLISHED.
   d. ENSURE THAT THE FINISH GRADE IN SHRUB AREAS IMMEDIATELY ADJACENT TO WALKS AND OTHER WALKING SURFACES, AFTER INSTALLING SOIL AMENDMENTS, IS 3" BELOW THE ADJACENT FINISH SURFACE, IN ORDER TO ALLOW FOR PROPER MULCH DEPTH. TAPER THE SOIL SURFACE TO MEET FINISH GRADE, AS SPECIFIED ON THE GRADING PLANS, AT APPROXIMATELY 18" AWAY FROM THE WALKS.
   e. ENSURE THAT THE FINISH GRADE IN TURF AREAS IMMEDIATELY ADJACENT TO WALKS AND OTHER WALKING SURFACES, AFTER INSTALLING SOIL AMENDMENTS, IS 1" BELOW THE FINISH SURFACE OF THE WALKS. TAPER THE SOIL SURFACE TO MEET FINISH GRADE, AS SPECIFIED ON THE GRADING PLANS, AT APPROXIMATELY 18" AWAY FROM THE WALKS.
   f. SHOULD ANY CONFLICTS AND/OR DISCREPANCIES ARISE BETWEEN THE GRADING PLANS, GEOTECHNICAL REPORT, THESE NOTES AND PLANS, AND ACTUAL CONDITIONS, THE CONTRACTOR SHALL IMMEDIATELY BRING SUCH ITEMS TO THE ATTENTION OF THE GENERAL CONTRACTOR, OWNER, OR OWNER'S REPRESENTATIVE.
6. ONCE SOIL PREPARATION IS COMPLETE, THE LANDSCAPE CONTRACTOR SHALL ENSURE THAT THERE ARE NO DEBRIS, TRASH, OR STONES LARGER THAN 1" REMAINING IN THE TOP 6" OF SOIL.

B. SUBMITTALS
1. THE CONTRACTOR SHALL PROVIDE SUBMITTALS AND SAMPLES, IF REQUIRED, TO THE OWNER OR OWNER'S REPRESENTATIVE, AND RECEIVE APPROVAL IN WRITING FOR SUCH SUBMITTALS BEFORE WORK COMMENCES.
2. SUBMITTALS SHALL INCLUDE PHOTOS OF PLANTS WITH A RULER OR MEASURING STICK FOR SCALE, PHOTOS OR SAMPLES OF ANY REQUIRED MULCHES, AND SOIL TEST RESULTS AND PREPARATION RECOMMENDATIONS FROM THE TESTING LAB (INCLUDING COMPOST AND FERTILIZER RATES AND TYPES, AND OTHER AMENDMENTS FOR TREE/SHRUB, TURF, AND SEED AREAS AS MAY BE APPROPRIATE).
3. SUBMITTALS SHALL ALSO INCLUDE MANUFACTURER CUT SHEETS FOR PLANTING ACCESSORIES SUCH AS TREE STAKES AND TIES, EDGING, AND LANDSCAPE FABRICS (IF ANY).
4. WHERE MULTIPLE ITEMS ARE SHOWN ON A PAGE, THE CONTRACTOR SHALL CLEARLY INDICATE THE ITEM BEING CONSIDERED.

C. GENERAL PLANTING
1. REMOVE ALL NURSERY TAGS AND STAKES FROM PLANTS.
2. EXCEPT IN AREAS TO BE PLANTED WITH ORNAMENTAL GRASSES, APPLY PRE-EMERGENT HERBICIDES AT THE MANUFACTURER'S RECOMMENDED RATE.
3. POSITION THE TREES AND SHRUBS IN THEIR INTENDED LOCATION AS PER THE PLAN. NOTIFY THE OWNER'S REPRESENTATIVE FOR INSPECTION AND APPROVAL OF ALL POSITIONING OF PLANT MATERIALS.
4. TRENCHING NEAR EXISTING TREES:
   a. CONTRACTOR SHALL NOT DISTURB ROOTS 1-1/2" AND LARGER IN DIAMETER WITHIN THE CRITICAL ROOT ZONE (CRZ) OF EXISTING TREES, AND SHALL EXERCISE ALL POSSIBLE CARE AND PRECAUTIONS TO AVOID INJURY TO TREE ROOTS, TRUNKS, AND BRANCHES. THE CRZ IS DEFINED AS A CIRCULAR AREA EXTENDING OUTWARD FROM THE TREE TRUNK, WITH A RADIUS EQUAL TO 1' FOR EVERY 1" OF TRUNK DIAMETER-AT-BREAST-HEIGHT (4.5' ABOVE THE AVERAGE GRADE AT THE TRUNK).
   b. ALL EXCAVATION WITHIN THE CRZ SHALL BE PERFORMED USING HAND TOOLS. NO MACHINE EXCAVATION OR TRENCHING OF ANY KIND SHALL BE ALLOWED WITHIN THE CRZ.
   c. ALTER ALIGNMENT OF PIPE TO AVOID TREE ROOTS 1-1/2" AND LARGER IN DIAMETER. WHERE TREE ROOTS 1-1/2" AND LARGER IN DIAMETER ARE ENCOUNTERED IN THE FIELD, TUNNEL UNDER SUCH ROOTS. WRAP EXPOSED ROOTS WITH SEVERAL LAYERS OF BURLAP AND KEEP MOIST. CLOSE ALL TRENCHES WITHIN THE CANOPY DRIP LINES WITHIN 24 HOURS.
   d. ALL SEVERED ROOTS SHALL BE HAND PRUNED WITH SHARP TOOLS AND ALLOWED TO AIR-DRY. DO NOT USE ANY SORT OF SEALERS OR WOUND PAINTS.

D. TREE PLANTING
1. TREE PLANTING HOLES SHALL BE EXCAVATED TO MINIMUM WIDTH OF TWO TIMES THE WIDTH OF THE ROOTBALL, AND TO A DEPTH EQUAL TO THE DEPTH OF THE ROOTBALL LESS TWO TO FOUR INCHES.
2. SCARIFY THE SIDES AND BOTTOM OF THE PLANTING HOLE PRIOR TO THE PLACEMENT OF THE TREE. REMOVE ANY GLAZING THAT MAY HAVE BEEN CAUSED DURING THE EXCAVATION OF THE HOLE.
3. FOR CONTAINER AND BOX TREES, TO REMOVE ANY POTENTIALLY GIRDLING ROOTS AND OTHER ROOT DEFECTS, THE CONTRACTOR SHALL SHAVE A 1" LAYER OFF OF THE SIDES AND BOTTOM OF THE ROOTBALL OF ALL TREES JUST BEFORE PLACING INTO THE PLANTING PIT. DO NOT "TEASE" ROOTS OUT FROM THE ROOTBALL.
4. INSTALL THE TREE ON UNDISTURBED SUBGRADE SO THAT THE TOP OF THE ROOTBALL IS TWO TO FOUR INCHES ABOVE THE SURROUNDING GRADE.
5. BACKFILL THE TREE HOLE UTILIZING THE EXISTING TOPSOIL FROM ON-SITE. ROCKS LARGER THAN 1" DIA. AND ALL OTHER DEBRIS SHALL BE REMOVED FROM THE SOIL PRIOR TO THE BACKFILL. SHOULD ADDITIONAL SOIL BE REQUIRED TO ACCOMPLISH THIS TASK, USE STORED TOPSOIL FROM ON-SITE OR IMPORT ADDITIONAL TOPSOIL FROM OFF-SITE AT NO ADDITIONAL COST TO THE OWNER. IMPORTED TOPSOIL SHALL BE OF SIMILAR TEXTURAL CLASS AND COMPOSITION IN THE ON-SITE SOIL.
6. TREES SHALL NOT BE STAKED UNLESS THE JURISDICTION OR LOCAL CONDITIONS (SUCH AS HEAVY WINDS OR SLOPES) REQUIRE STAKES TO KEEP TREES UPRIGHT. SHOULD STAKING BE REQUIRED, THE TOTAL NUMBER OF TREE STAKES (BEYOND THE MINIMUMS LISTED BELOW) WILL BE LEFT TO THE LANDSCAPE CONTRACTOR'S DISCRETION. SHOULD ANY TREES FALL OR LEAN, THE LANDSCAPE CONTRACTOR SHALL STRAIGHTEN THE TREE, OR REPLACE IT SHOULD IT BECOME DAMAGED. TREE STAKING SHALL ADHERE TO THE FOLLOWING GUIDELINES:
   a. 1"-2" TREES (OR #15 GAL - 24" BOX): TWO STAKES PER TREE
   b. 2-1/2"-4" TREES (OR 36" - 48" BOX): THREE STAKES PER TREE
   c. TREES OVER 4" CALIPER (OR >48" BOX): GUY AS NEEDED
   d. MULTI-TRUNK TREES: THREE STAKES PER TREE MINIMUM, QUANTITY AND POSITIONS AS NEEDED TO STABILIZE THE TREE
7. UPON COMPLETION OF PLANTING, CONSTRUCT AN EARTH WATERING BASIN AROUND THE TREE. COVER THE INTERIOR OF THE TREE RING WITH MULCH (TYPE AND DEPTH PER PLANS).
8. FOR TREES IN TURF AREAS, DO NOT PLANT GRASS ALL THE WAY TO THE TRUNK OF THE TREE. LEAVE THE AREA OVER THE ROOT BALL AND INSTALL MULCH WITH AT LEAST 2" OF SPECIFIED MULCH. SEE MULCH SPECIFICATION FOR ADDITIONAL INFORMATION.

E. SHRUB, PERENNIAL, AND GROUNDCOVER PLANTING
1. DIG THE PLANTING HOLES TWICE AS WIDE AND 2" LESS DEEP THAN EACH PLANT'S ROOTBALL. INSTALL THE PLANT IN THE HOLE. BACKFILL AROUND THE PLANT WITH SOIL AMENDED PER SOIL TEST RECOMMENDATIONS.
2. INSTALL THE WEED BARRIER CLOTH, OVERLAPPING IT AT THE ENDS. UTILIZE STEEL STAPLES TO KEEP THE WEED BARRIER CLOTH IN PLACE.
3. WHEN PLANTING IS COMPLETE, INSTALL MULCH (TYPE AND DEPTH PER PLANS) OVER ALL PLANTING BEDS, COVERING THE ENTIRE PLANTING AREA.

F. SODDING
1. SOD VARIETY TO BE AS SPECIFIED ON THE LANDSCAPE PLAN.
2. LAY SOD WITHIN 24 HOURS FROM THE TIME OF STRIPPING. DO NOT LAY IF THE GROUND IS FROZEN.
3. LAY THE SOD TO FORM A SOLID MASS WITH TIGHTLY FITTED JOINTS. BUTT ENDS AND SIDES OF SOD STRIPS - DO NOT OVERLAP. STAGGER STRIPS TO OFFSET JOINTS IN ADJACENT COURSES.
4. ROLL THE SOD TO ENSURE GOOD CONTACT OF THE SOD'S ROOT SYSTEM WITH THE SOIL UNDERNEATH.
5. WATER THE SOD THOROUGHLY WITH A FINE SPRAY IMMEDIATELY AFTER PLANTING TO OBTAIN AT LEAST SIX INCHES OF PENETRATION INTO THE SOIL BELOW THE SOD.

G. MULCH
1. INSTALL MULCH TOPDRESSING, TYPE AND DEPTH PER MULCH NOTE, IN ALL PLANTING AREAS AND TREE RINGS.
2. DO NOT INSTALL MULCH WITHIN 6" OF TREE ROOT FLARE. MULCH AT THE BASE OF SHRUBS SHALL BE A MAXIMUM 1" DEPTH OVER ROOT BALL
3. MULCH COVER WITHIN 6" OF CONCRETE WALKS AND CURBS SHALL NOT PROTRUDE ABOVE THE FINISH SURFACE OF THE WALKS AND CURBS. FINISH GRADE OF MULCH AT CURBS AND SIDEWALKS SHALL BE 1" LOWER THAN THE ADJACENT CURB OR SIDEWALK. MULCH COVER WITHIN 12" OF WALLS SHALL BE AT LEAST 3" LOWER THAN THE TOP OF WALL.

H. CLEAN UP
1. DURING LANDSCAPE PREPARATION AND PLANTING, KEEP ALL PAVEMENT CLEAN AND ALL WORK AREAS IN A NEAT, ORDERLY CONDITION.
2. DISPOSED LEGALLY OF ALL EXCAVATED MATERIALS OFF THE PROJECT SITE.

I. INSPECTION AND ACCEPTANCE
1. UPON COMPLETION OF THE WORK, THE LANDSCAPE CONTRACTOR SHALL PROVIDE THE SITE CLEAN, FREE OF DEBRIS AND TRASH, AND SUITABLE FOR USE AS INTENDED. THE LANDSCAPE CONTRACTOR SHALL THEN REQUEST AN INSPECTION BY THE OWNER TO DETERMINE FINAL ACCEPTABILITY.
2. WHEN THE INSPECTED PLANTING WORK DOES NOT COMPLY WITH THE CONTRACT DOCUMENTS, THE LANDSCAPE CONTRACTOR SHALL REPLACE AND/OR REPAIR THE REJECTED WORK TO THE OWNER'S SATISFACTION WITHIN 24 HOURS.
3. THE LANDSCAPE MAINTENANCE PERIOD WILL NOT COMMENCE UNTIL THE LANDSCAPE WORK HAS BEEN RE-INSPECTED BY THE OWNER AND FOUND TO BE ACCEPTABLE. AT THAT TIME, A WRITTEN NOTICE OF FINAL ACCEPTANCE WILL BE ISSUED BY THE OWNER, AND THE MAINTENANCE AND GUARANTEE PERIODS WILL COMMENCE.

J. LANDSCAPE MAINTENANCE
1. THE LANDSCAPE CONTRACTOR SHALL BE RESPONSIBLE FOR THE MAINTENANCE OF ALL WORK SHOWN ON THESE PLANS FOR 90 DAYS BEYOND FINAL ACCEPTANCE OF ALL LANDSCAPE WORK BY THE OWNER. LANDSCAPE MAINTENANCE SHALL INCLUDE WEEKLY SITE VISITS FOR THE FOLLOWING ACTIONS (AS APPROPRIATE): PROPER PRUNING, RESTAKING OF TREES, RESETTING OF PLANTS THAT HAVE SETTLED, MOWING AND AERATION OF LAWNS, WEEDING, TREATING FOR INSECTS AND DISEASES, REPLACEMENT OF MULCH, REMOVAL OF LITTER, REPAIRS TO THE IRRIGATION SYSTEM DUE TO FAULTY PARTS AND/OR WORKMANSHIP, AND THE APPROPRIATE WATERING OF ALL PLANTINGS. THE LANDSCAPE CONTRACTOR SHALL MAINTAIN THE IRRIGATION SYSTEM IN PROPER WORKING ORDER, WITH SCHEDULING ADJUSTMENTS BY SEASON TO MAXIMIZE WATER CONSERVATION.
2. SHOULD SEEDED AND/OR SODDED AREAS NOT BE COVERED BY AN AUTOMATIC IRRIGATION SYSTEM, THE LANDSCAPE CONTRACTOR SHALL BE RESPONSIBLE FOR WATERING THESE AREAS AND OBTAINING A FULL, HEALTHY STAND OF PLANTS AT NO ADDITIONAL COST TO THE OWNER.
3. TO ACHIEVE FINAL ACCEPTANCE AT THE END OF THE MAINTENANCE PERIOD, ALL OF THE FOLLOWING CONDITIONS MUST OCCUR:
   i. THE LANDSCAPE SHALL SHOW ACTIVE, HEALTHY GROWTH (WITH EXCEPTIONS MADE FOR SEASONAL DORMANCY). ALL PLANTS NOT MEETING THIS CONDITION SHALL BE REJECTED AND REPLACED BY HEALTHY PLANT MATERIAL PRIOR TO FINAL ACCEPTANCE.
   j. ALL HARDSCAPE SHALL BE CLEANED PRIOR TO FINAL ACCEPTANCE.
   k. SODDED AREAS MUST BE ACTIVELY GROWING AND MUST REACH A MINIMUM HEIGHT OF 1 1/2 INCHES BEFORE FIRST MOWING. BARE AREAS LARGER THAN TWELVE SQUARE INCHES MUST BE RESODDED (AS APPROPRIATE) PRIOR TO FINAL ACCEPTANCE. ALL SODDED TURF SHALL BE NEATLY MOWED.

K. WARRANTY PERIOD, PLANT GUARANTEE AND REPLACEMENTS
1. THE LANDSCAPE CONTRACTOR SHALL GUARANTEE ALL TREES, SHRUBS, PERENNIALS, SOD, AND IRRIGATION SYSTEMS FOR A PERIOD OF ONE YEAR FROM THE DATE OF THE OWNER'S FINAL ACCEPTANCE (90 DAYS FOR ANNUAL PLANTS). THE CONTRACTOR SHALL REPLACE, AT HIS OWN EXPENSE AND TO THE SATISFACTION OF THE OWNER, ANY PLANTS WHICH DIE IN THAT TIME, OR REPAIR ANY PORTIONS OF THE IRRIGATION SYSTEM WHICH OPERATE IMPROPERLY.
2. AFTER THE INITIAL MAINTENANCE PERIOD AND DURING THE GUARANTEE PERIOD, THE LANDSCAPE CONTRACTOR SHALL ONLY BE RESPONSIBLE FOR REPLACEMENT OF PLANTS WHEN PLANT DEATH CANNOT BE ATTRIBUTED DIRECTLY TO OVERWATERING OR OTHER DAMAGE BY HUMAN ACTIONS.

L. PROVIDE A MINIMUM OF (2) COPIES OF RECORD DRAWINGS TO THE OWNER UPON COMPLETION OF WORK. A RECORD DRAWING IS A RECORD OF ALL CHANGES THAT OCCURRED IN THE FIELD AND THAT ARE DOCUMENTED THROUGH CHANGE ORDERS, ADDENDA, OR CONTRACTOR/CONSULTANT DRAWING MARKUPS.

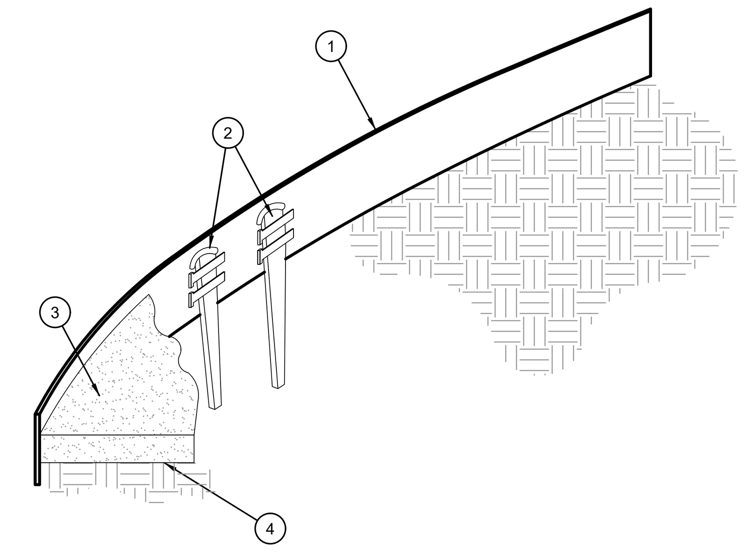

1. ROLLED-TOP STEEL EDGING PER PLANS.
2. TAPERED STEEL STAKES.
3. MULCH, TYPE AND DEPTH PER PLANS.
4. FINISH GRADE.

NOTES:
1) INSTALL EDGING SO THAT STAKES WILL BE ON INSIDE OF PLANTING BED.
2) BOTTOM OF EDGING SHALL BE BURIED A MINIMUM OF 1" BELOW FINISH GRADE.
3) TOP OF MULCH SHALL BE 1" LOWER THAN TOP OF EDGING.

## D STEEL EDGING
SCALE: NOT TO SCALE

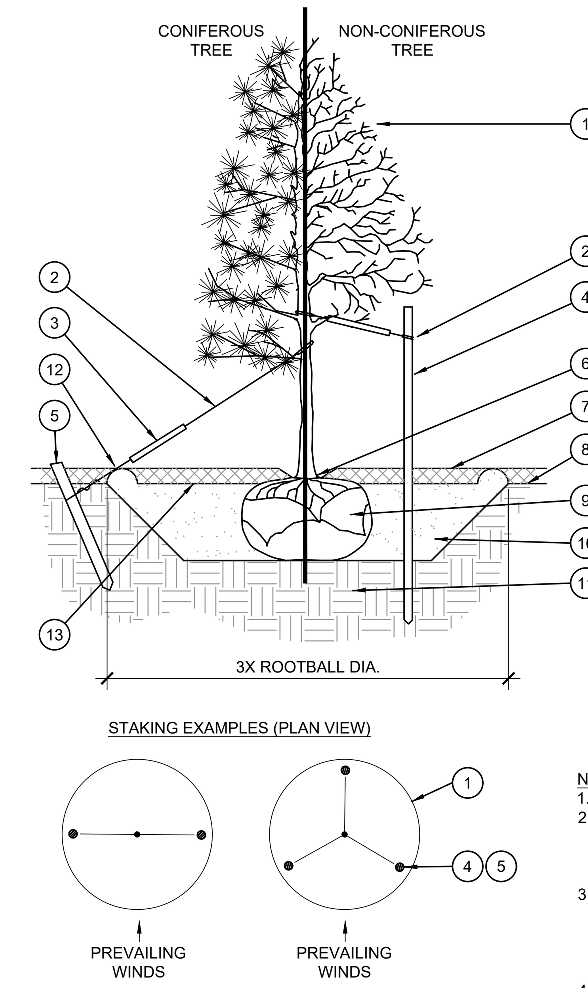


1. TREE CANOPY.
2. CINCH-TIES (24" BOX/2" CAL. TREES AND SMALLER) OR 12 GAUGE GALVANIZED WIRE WITH NYLON TREE STRAPS AT TREE AND STAKE (36" BOX/2.5" CAL. TREES AND LARGER). SECURE TIES OR STRAPS TO TRUNK JUST ABOVE LOWEST MAJOR BRANCHES.
3. 24" X 3/4" P.V.C. MARKERS OVER WIRES.
4. GREEN STEEL T-POSTS. EXTEND POSTS 12" MIN. INTO UNDISTURBED SOIL.
5. PRESSURE-TREATED WOOD DEADMAN, TWO PER TREE (MIN.). BURY OUTSIDE OF PLANTING PIT AND 18" MIN. INTO UNDISTURBED SOIL.
6. TRUNK FLARE.
7. INSTALL WOOD CHIP ORGANIC MULCH OVER ROOTBALL AND WITHIN 5' RADIUS OF TREE TRUNK. DO NOT PLACE MULCH WITHIN 6" OF TRUNK. NO WEED FABRIC ALLOWED WITHIN THIS RADIUS.
8. FINISH GRADE.
9. ROOT BALL.
10. BACKFILL. AMEND AND FERTILIZE ONLY AS RECOMMENDED IN SOIL FERTILITY ANALYSIS.
11. UNDISTURBED NATIVE SOIL.
12. 4" HIGH EARTHEN WATERING BASIN.
13. FINISH GRADE.

NOTES:
1. SCARIFY SIDES OF PLANTING PIT PRIOR TO SETTING TREE.
2. REMOVE EXCESS SOIL APPLIED ON TOP OF THE ROOTBALL THAT COVERS THE ROOT FLARE. THE PLANTING HOLE DEPTH SHALL BE SUCH THAT THE ROOTBALL RESTS ON UNDISTURBED SOIL, AND THE ROOT FLARE IS 2"-4" ABOVE FINISH GRADE.
3. FOR B&B TREES, CUT OFF BOTTOM 1/3 OF WIRE BASKET BEFORE PLACING TREE IN HOLE, CUT OFF AND REMOVE REMAINDER OF BASKET AFTER TREE IS SET IN HOLE, REMOVE ALL NYLON TIES, TWINE, ROPE, AND OTHER PACKING MATERIAL. REMOVE AS MUCH BURLAP FROM AROUND ROOTBALL AS IS PRACTICAL.
4. REMOVE ALL NURSERY STAKES AFTER PLANTING.
5. FOR TREES 36" BOX/2.5" CAL. AND LARGER, USE THREE STAKES OR DEADMEN (AS APPROPRIATE), SPACED EVENLY AROUND TREE.
6. STAKING SHALL BE TIGHT ENOUGH TO PREVENT TRUNK FROM BENDING, BUT LOOSE ENOUGH TO ALLOW SOME TRUNK MOVEMENT IN WIND.

## A TREE PLANTING
SCALE: NOT TO SCALE

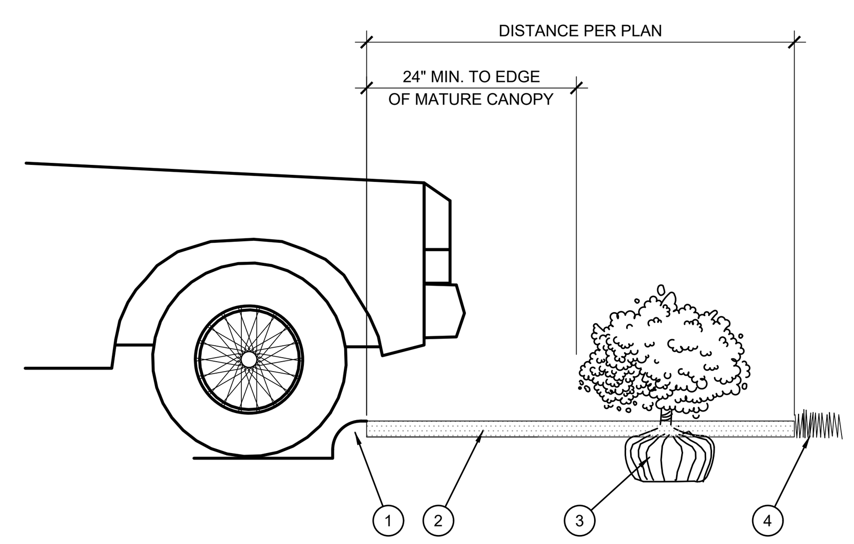


1. CURB.
2. MULCH LAYER.
3. PLANT.
4. TURF (WHERE SHOWN ON PLAN).

## E PLANTING AT PARKING AREA
SCALE: NOT TO SCALE

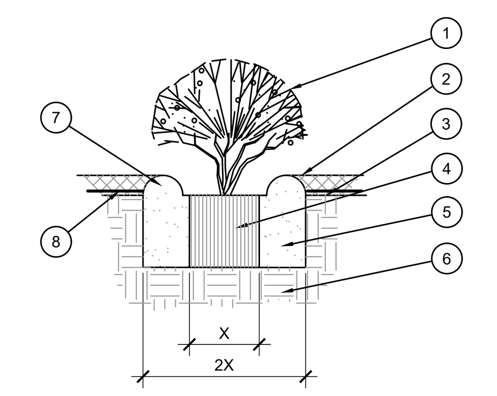


1. SHRUB, PERENNIAL, OR ORNAMENTAL GRASS.
2. MULCH, TYPE AND DEPTH PER PLANS. PLACE NO MORE THAN 1" OF MULCH WITHIN 6" OF PLANT CENTER.
3. FINISH GRADE.
4. ROOT BALL.
5. BACKFILL. AMEND AND FERTILIZE ONLY AS RECOMMENDED IN SOIL FERTILITY ANALYSIS.
6. UNDISTURBED NATIVE SOIL.
7. 3" HIGH EARTHEN WATERING BASIN.
8. WEED FABRIC UNDER MULCH.

## B SHRUB AND GROUNDCOVER PLANTING
SCALE: NTS

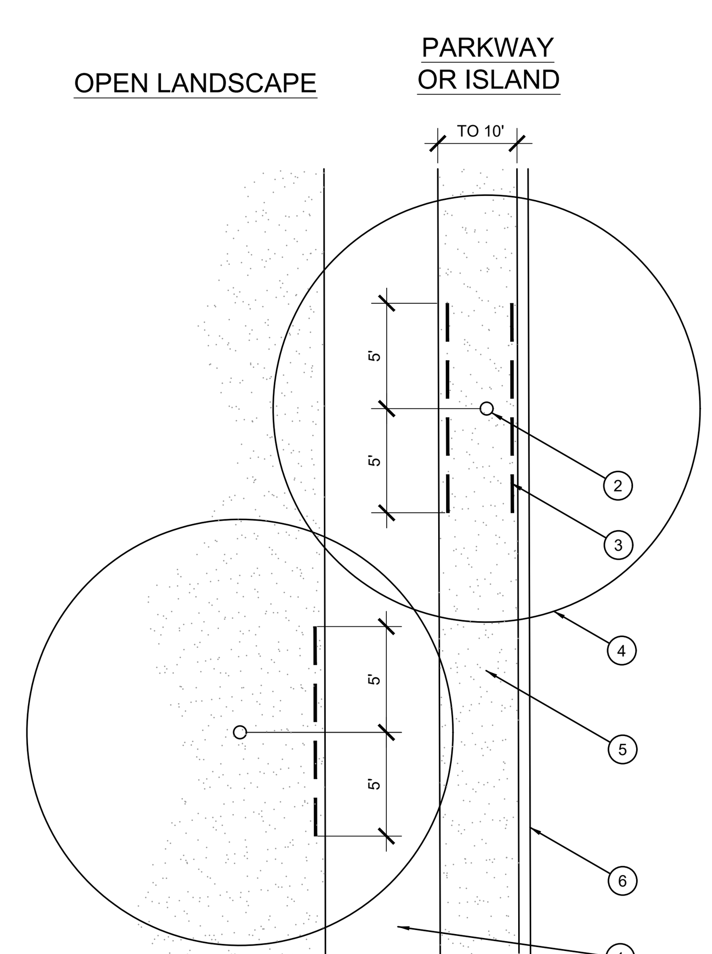


1. TYPICAL WALKWAY OR PAVING
2. TREE TRUNK
3. LINEAR ROOT BARRIER MATERIAL. SEE PLANTING NOTES FOR TYPE AND MANUFACTURER. INSTALL PER MANUFACTURER'S SPECIFICATIONS.
4. TREE CANOPY
5. TYPICAL PLANTING AREA
6. TYPICAL CURB AND GUTTER

NOTES:
1) INSTALL ROOT BARRIERS NEAR ALL NEWLY-PLANTED TREES THAT ARE LOCATED WITHIN FIVE (5) FEET OF PAVING OR CURBS.
2) BARRIERS SHALL BE LOCATED IMMEDIATELY ADJACENT TO HARDSCAPE. UNDER NO CIRCUMSTANCES SHALL THE CONTRACTOR USE ROOT BARRIERS OF A TYPE THAT COMPLETELY ENCIRCLE THE ROOTBALL.

## F ROOT BARRIER - PLAN VIEW
SCALE: NOT TO SCALE

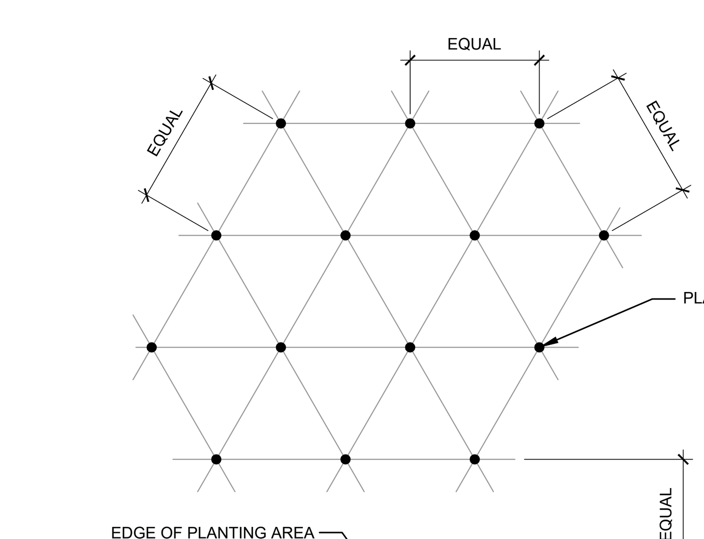


NOTE: ALL PLANTS SHALL BE PLANTED AT EQUAL TRIANGULAR SPACING (EXCEPT WHERE SHOWN ON PLANS AS INFORMAL GROUPINGS). REFER TO PLANT LEGEND FOR SPACING DISTANCE BETWEEN PLANTS.

1) STEP 1: DETERMINE TOTAL PLANTS FOR THE AREA WITH THE FOLLOWING FORMULA:
TOTAL AREA / AREA DIVIDER = TOTAL PLANTS

| PLANT SPACING | AREA DIVIDER | PLANT SPACING | AREA DIVIDER |
|---|---|---|---|
| 6" | 0.22 | 18" | 1.95 |
| 8" | 0.39 | 24" | 3.46 |
| 10" | 0.60 | 30" | 5.41 |
| 12" | 0.87 | 36" | 7.79 |
| 15" | 1.35 | | |

2) STEP 2: SUBTRACT THE ROW (S) OF PLANTS THAT WOULD OCCUR AT THE EDGE OF THE PLANTED AREA WITH THE FOLLOWING FORMULA: TOTAL PERIMETER LENGTH / PLANT SPACING = TOTAL PLANT SUBTRACTION

**EXAMPLE:** PLANTS AT 18" O.C. IN 100 SF PLANTING AREA, 40 LF PERIMETER
STEP 1: 100 SF/1.95 = 51 PLANTS
STEP 2: 51 PLANTS - (40 LF / 1.95 = 21 PLANTS) = 30 PLANTS TOTAL

## C PLANT SPACING
SCALE: NTS


EVERGREEN DESIGN GROUP
(800) 680-6630
1600 Broadway, Suite 1600
Denver, CO 80202
www.EvergreenDesignGroup.com


Know what's below. Call before you dig.

THE LOCATION OF EXISTING UNDERGROUND UTILITIES ARE SHOWN IN AN APPROXIMATE WAY ONLY. THE CONTRACTOR SHALL DETERMINE THE EXACT LOCATION OF ALL EXISTING UTILITIES BEFORE COMMENCING WORK. CONTRACTOR AGREES TO BE FULLY RESPONSIBLE FOR ANY AND ALL DAMAGES WHICH MIGHT BE OCCASIONED BY THE CONTRACTORS FAILURE TO EXACTLY LOCATE AND PRESERVE ANY AND ALL UNDERGROUND UTILITIES.


Bowman CONSULTING
© Bowman Consulting Group, Ltd.
5601 Democracy Dr., Ste 205 Plano, Texas 75024
Phone: (972) 497-2990 Fax: (512) 327-4062 www.bowman.com


REVISIONS

| REVISION | DESCRIPTION | DATE |
|---|---|---|
| △ | | |

LANDSCAPE DETAILS & SPECIFICATIONS

WHATABURGER
NEC 98TH ST. & VOLCANO RD.
ALBUQUERQUE, NM 87124

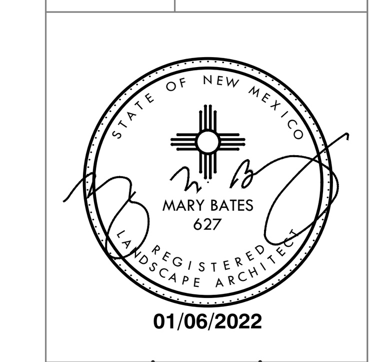


01/06/2022

| DESIGN | DRAWN | CHKD |
|---|---|---|
| EMS | EMS | MB |

JOB No. 070426-01-001

SHEET LP-2

C:\Users\mbate\Dropbox (EDG)\EDG - Shared\2021\Whataburger\Whataburger - Albuquerque NM - 98th & Volcano\Whataburger Alburquerque 98th - LP 2021-12-03.dwg, LP-2, January 06, 2022, 9:36 PM, mbate