ARCHITECTURE SINCE 1952

Castles Design Group, P.C.

A Professional Architectural Corporation
3801 Kirby Drive, Suite 600
Houston, Texas 77098
tel: 713.664.7974
fax: 713.664.9756
www.castlesdesigngroup.com

WHATABURGER

DEVELOPMENT SITE DRAWING FOR PLANTERS

LOCATION Whataburger – (2105234) NEC 98th St NW and Volcano Rd (Albuquerque NM)

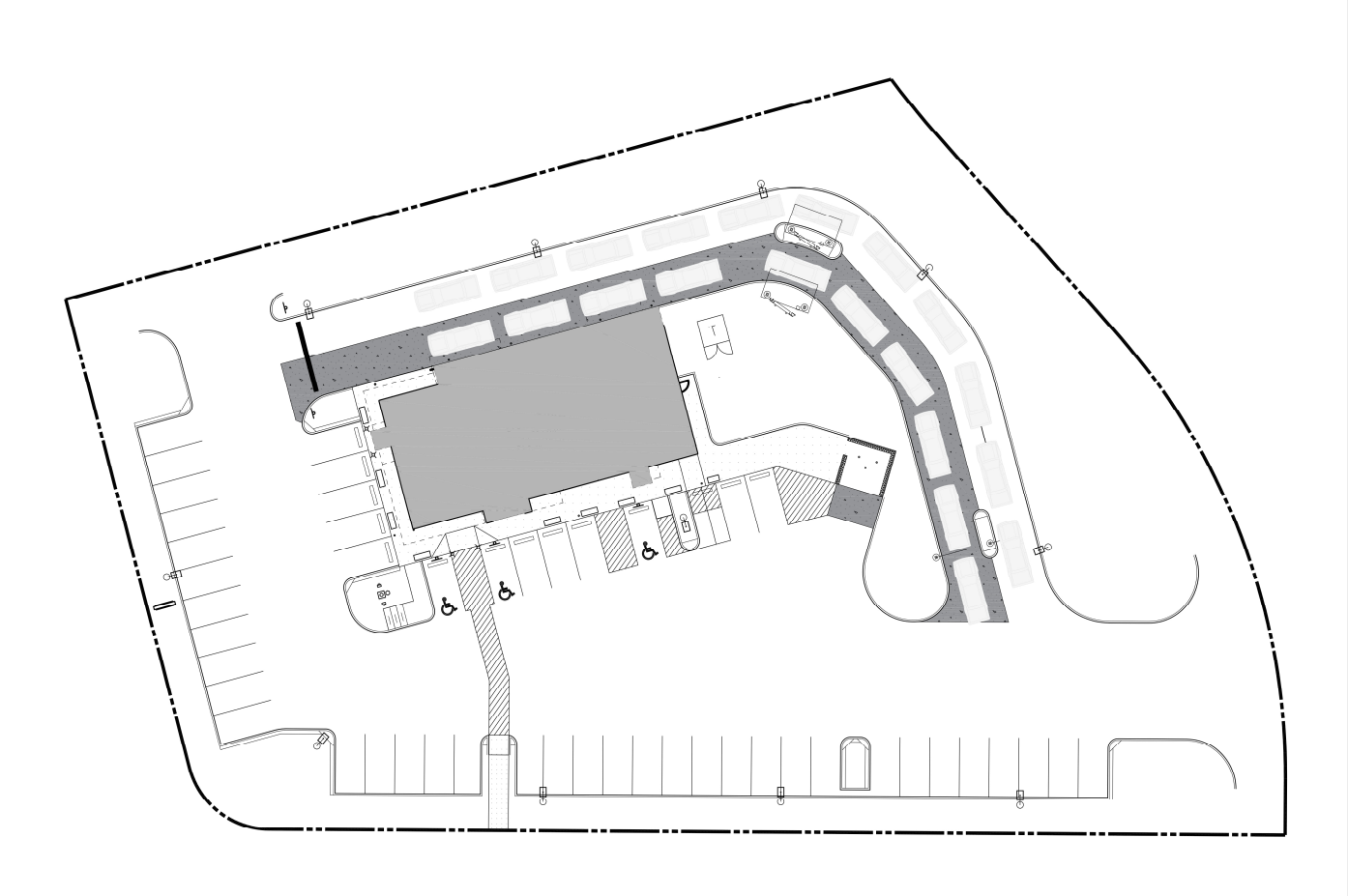

The front elevation is 40’ long (40 x .30 = 12) I have provided 3 planters 5’ each. (5 x 3 = 15)

The non-drive thru side elevation is 89’ long (89 x .30 = 26.7) I have provided 5 planters 5’ each. (5 x 5 = 25) + 1 planter 3’-6”. This equals 28.5 total planter length.

SPEAKERS

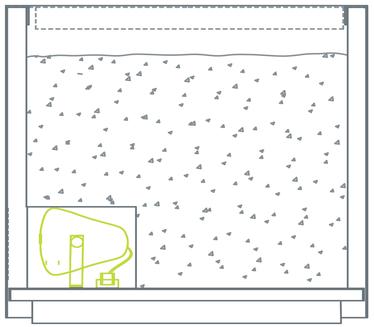

Indoor/Outdoor Integrated Speakers, weather resistant construction for year round indoor/outdoor use, compact 2 way loudspeaker systems for exceptional performance. Visit our website for more detailed information.

WOOD LATTICE

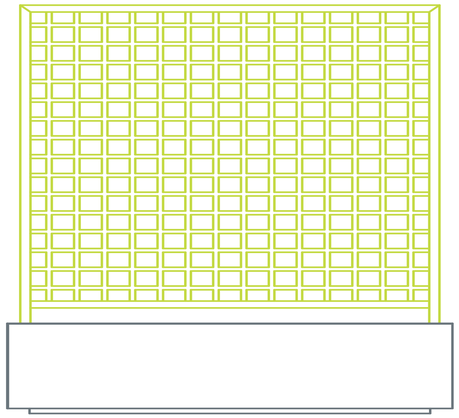

Pre-assembled FSC certified ipe lattice using an overlapping dado joint with a brass pin detail intersection. Mechanically fastens to internal brackets located within the container.

ALUMINUM LATTICE

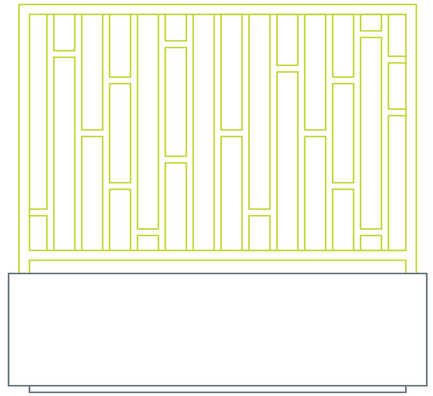

Pre-assembled aluminum lattice which mechanically fastens to internal brackets located within the container. Can be powder coated to match the container or powder coated a different color for contrast.

FACE LED LIGHTING

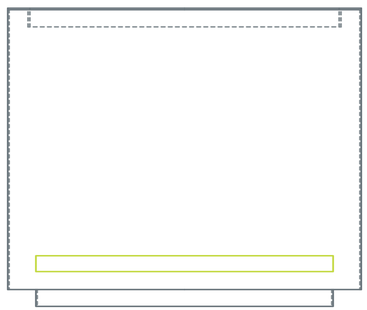

LED face lighting is available on any flat surface container. 12 volt DC operation or hard wired into an already existing 12 volt system. Transformer sold separately. Visit our website for more information.

TOE-KICK LED LIGHTING

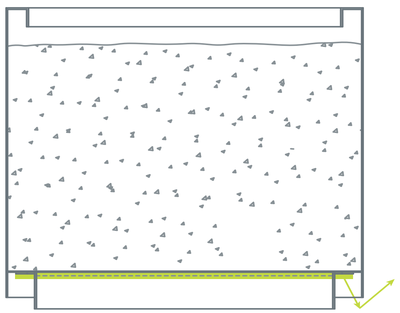

Toe kick lighting is available on most containers. 12 volt DC operation or hard wired into an already existing 12 volt system. Transformer sold with first 12" on LED toe kick lighting if requested. Visit our website for more information.

LIP LED LIGHTING

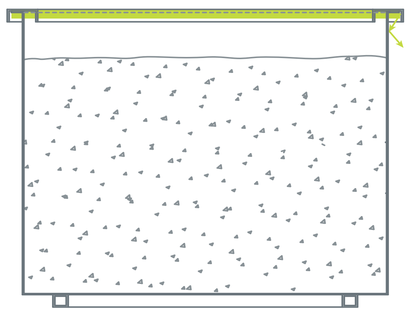

Lip LED lighting is available on most containers. 12 volt DC operation or hard wired into an already existing 12 volt system. Transformer sold with first 12" on LED Lip lighting if requested. Visit our website for more information.

FUNCTIONALITY OPTIONS

ADJUSTABLE FEET

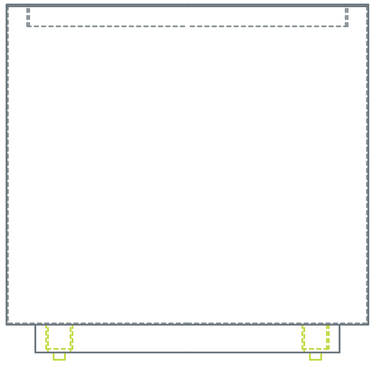

Commercial grade stainless steel adjustable feet fastened onto container in order to level container on uneven surfaces. Rated at 2,000 lbs. per foot.

CASTERS

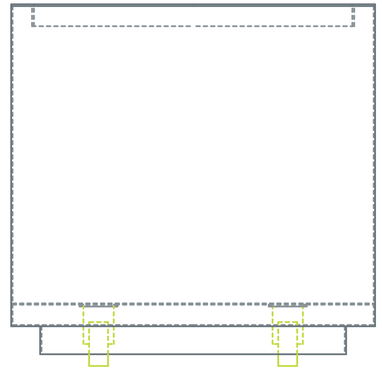

Casters are mechanically fastened to a recessed bottom creating a ½" - ¾" reveal between the deck and the bottom edge of the container.

DRAINAGE FITTINGS

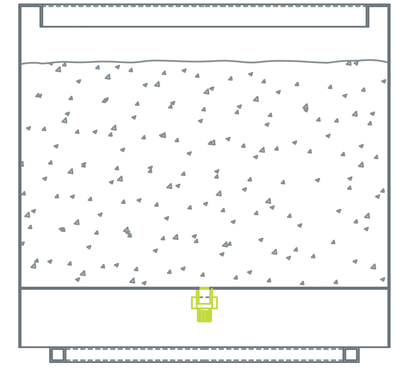

1" pipe nipple or elbow is welded into the container in order to direct water away from deck surface, eliminating tea staining and standing water.

IRRIGATION SLEEVES

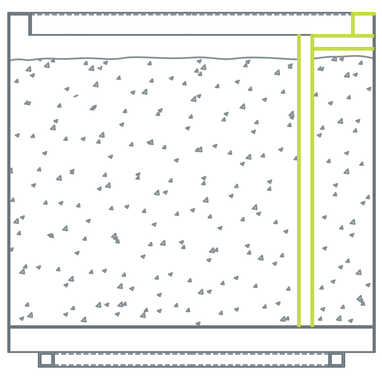

1" sleeve is welded into the interior of the container in order to hide the irrigation line and simplify installation and maintenance of the irrigation system.

DRIP TRAYS

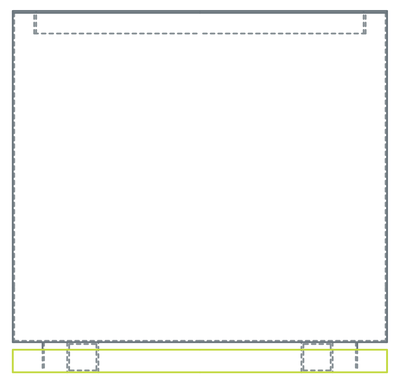

Drip tray is sized to match the containers footprint. ½" Gap between the tray and the container creates a nice shadow reveal. Made of aluminum and powder coated to match. Must be requested with initial order.

SURFACE MOUNTS

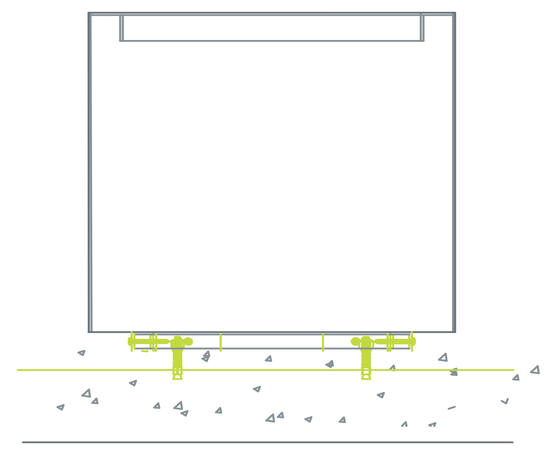

Hardware to blindly secure planters to the deck surface. Please contact us for more information.

Tall Rectangular Planter - Large

60"L X 20"W X 24"H

Weight - Steel : 128 lbs. Aluminum : 56 lbs.

Capacity : 15.5 cubic feet

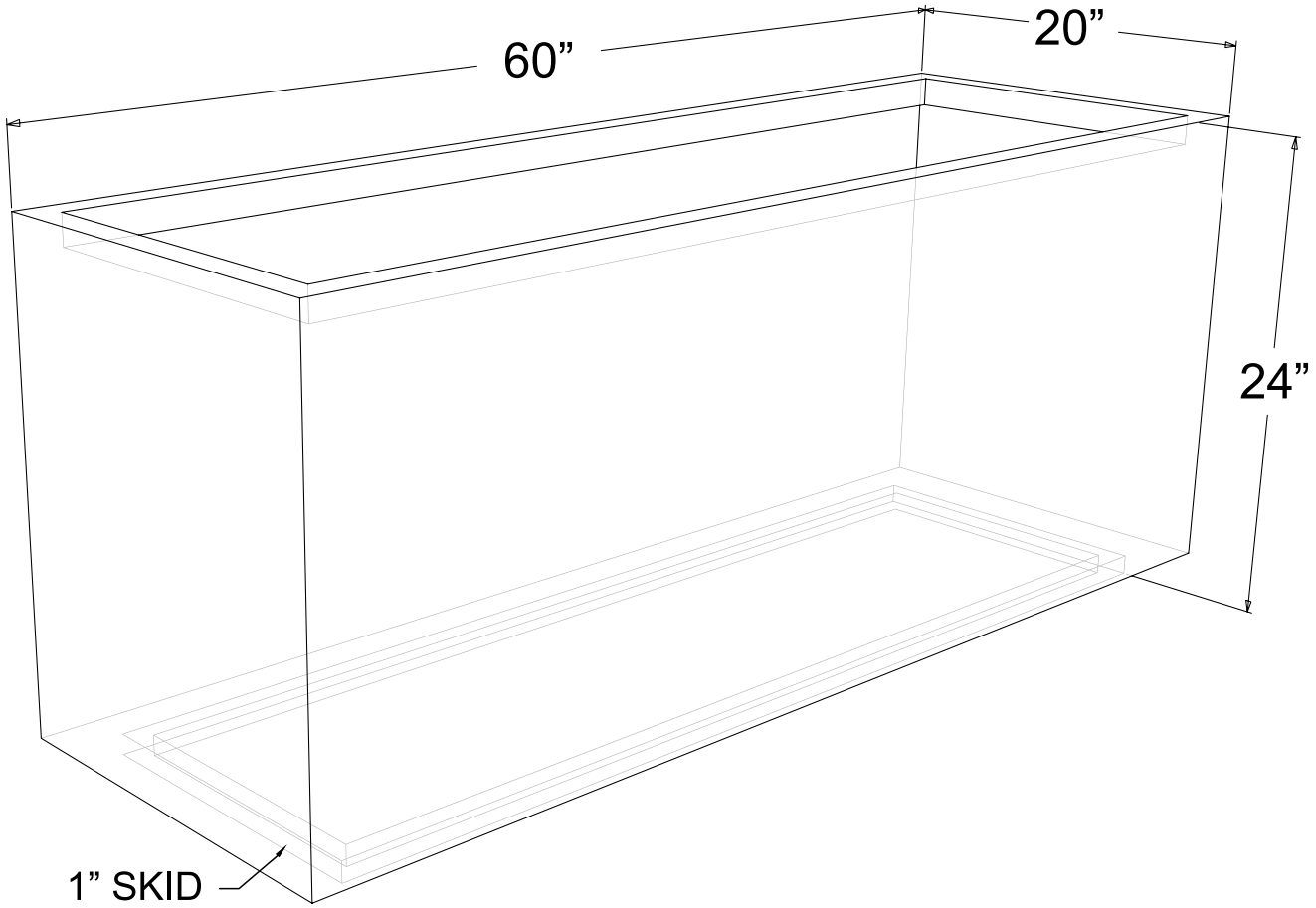

YARDART

uniquegardendecor.com

(866) 382-8600

Tall Rectangular Planter - Medium

42"L X 20"W X 24"H

Weight - Steel : 101 lbs. Aluminum : 45 lbs.

Capacity : 10.75 cubic feet

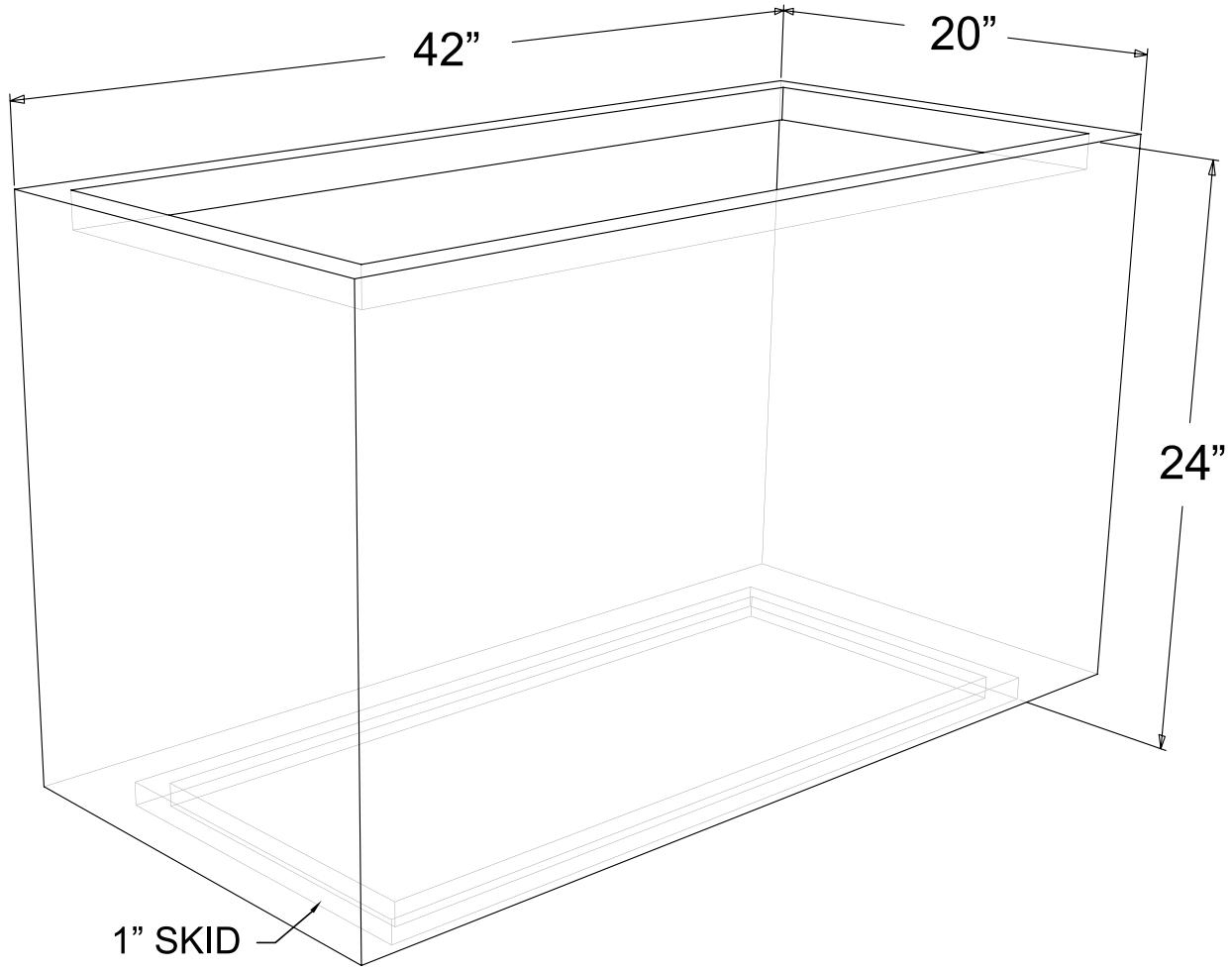

YARDART

uniquegardendecor.com

(866) 382-8600

Tall Rectangular Planter - Small

25"L X 20"W X 24"H

Weight - Steel : 71 lbs. Aluminum : 32 lbs.

Capacity : 6.5 cubic feet

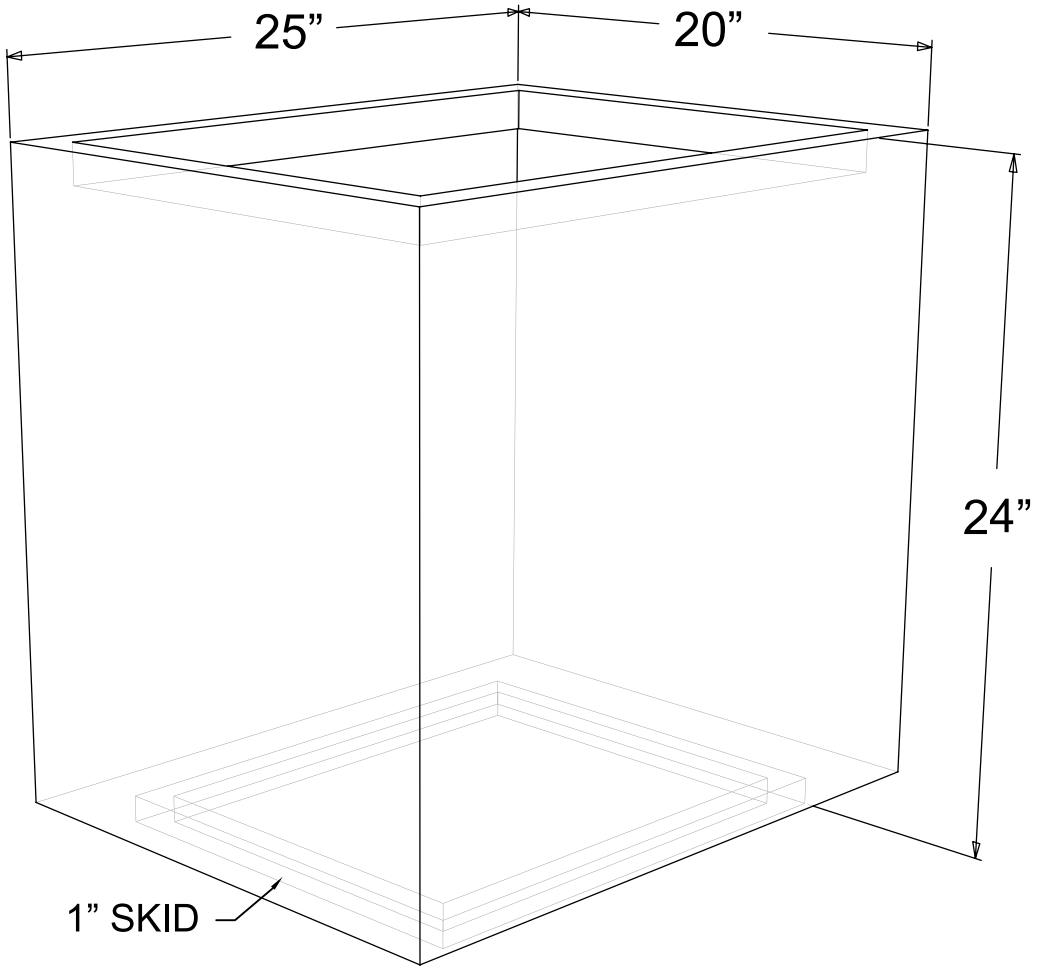

YARDART

uniquegardendecor.com

(866) 382-8600