DRB SITE PLAN PROJECT #: PR-2019-002402

DRB SITE PLAN APPLICATION #: SI-2021-02080

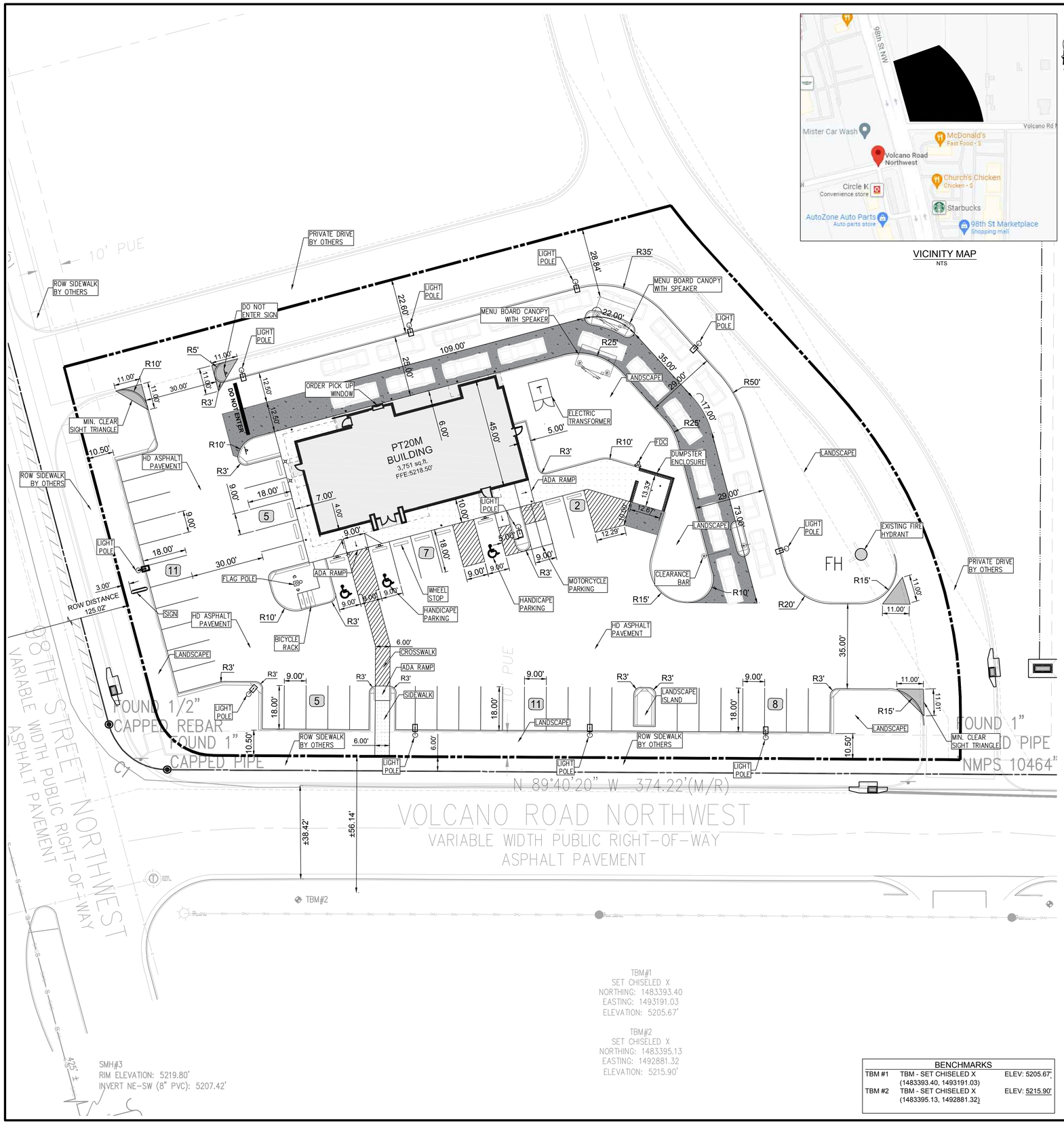

VICINITY MAP
NTS

PROPOSED LEGEND

- BUILDING
- BUILDING FOUNDATION LIMITS
- CONCRETE SIDEWALK
- PROPERTY LINE
- STD. 6" CONCRETE CURB
- PARKING SPACE COUNT
- HEAVY DUTY CONCRETE

EXISTING LEGEND

- FOUND MONUMENT (AS NOTED)
- TEMPORARY BENCHMARK
- TELEPHONE MANHOLE
- SEWER MANHOLE
- DRAINAGE MANHOLE
- FIRE HYDRANT
- WATER VALVE
- DRAINAGE INLET
- SIGN
- (M) MEASURED/CALCULATED DIMENSION
- (R) RECORD DIMENSION
- N/F NOW OR FORMERLY
- R/W RIGHT-OF-WAY
- TBM TEMPORARY BENCHMARK
- RCP REINFORCED CONCRETE PIPE
- PVC POLYVINYL CHLORIDE PIPE
- BOC BACK OF CURB
- FL FLOW LINE
- EA EDGE OF ASPHALT
- TC TOP OF CONCRETE
- TA TOP OF ASPHALT
- TB TOP OF BANK
- BB BOTTOM OF BANK
- NG NATURAL GROUND
- BUILDING OVERHANG
- CENTERLINE
- UNDERGROUND SEWER LINE
- UNDERGROUND STORM DRAIN LINE
- SUBJECT PROPERTY LINE

20 0 20 40
SCALE: 1 INCH = 20 FT

SITE DATA & AREA CALCULATIONS

CURRENT ZONING CLASSIFICATION:	NR-BP (BUSINESS PARK)
CURRENT LOCAL JURISDICTION:	CITY OF ALBUQUERQUE
FLOOD ZONE CLASSIFICATION;	ZONE 'X'
FEMA PANEL:	35001C0328J
DATE:	11/04/2016
SITE AREA TOTAL:	63496 SF (1.457 AC)
IMPERVIOUS AREA:	48,168 SF (1.106 AC)
PERVIOUS AREA OPEN SPACE:	15,327 SF (0.351 AC)
OPEN SPACE PERCENTAGE:	24.09%
FLOOR AREA RATIO BLDG/SITE:	5.91%

PARKING DATA

SPACE REQUIRED:	8 SPACES PER 1000 SF GFA = 31 SPACES
SPACES PROVIDED:	46 REGULAR 3 ADA 49 TOTAL
TYPICAL DIMENSIONS:	9' WIDTH 18' DEPTH
MOTORCYCLE:	
SPACE REQUIRED:	2 SPACES PER 26-50 VEHICLE SPACES = 2
SPACE PROVIDED:	2 SPACES
BICYCLE:	
SPACE REQUIRED:	3 SPACES OR 10% OF VEHICLE SPACES WHICHEVER IS GREATER = 5 SPACES
SPACE PROVIDED:	5 SPACES

BENCHMARKS

TBM #1	TBM - SET CHISELED X (1483393.40, 1493191.03)	ELEV: 5205.67'
TBM #2	TBM - SET CHISELED X (1483395.13, 1492881.32)	ELEV: 5215.90'

PROJECT NUMBER: DRB SITE PLAN PROJECT #: PR-2019-002402

Application Number: DRB SITE PLAN APPLICATION #: SI-2021-02080

This plan is consistent with the specific Site Development Plan approved by the Environmental Planning Commission (EPC), dated _____ and the Findings and Conditions in the Official Notification of Decision are satisfied.

Is an Infrastructure List required? ( ) Yes ( ) No If yes, then a set of approved DRC plans with a work order is required for any construction within Public Right-of-Way or for construction of public improvements.

DRB SITE DEVELOPMENT PLAN APPROVAL:

Traffic Engineering, Transportation Division	Date
ABCWUA	Date
Parks and Recreation Department	Date
City Engineer/Hydrology	Date
Code Enforcement	Date
* Environmental Health Department (conditional)	Date
Solid Waste Management	Date
DRB Chairperson, Planning Department	Date

*Environmental Health, if necessary

2/16/18

811 Know what's below. Call before you dig.

THE LOCATION OF EXISTING UNDERGROUND UTILITIES ARE SHOWN IN AN APPROXIMATE WAY ONLY. THE CONTRACTOR SHALL DETERMINE THE EXACT LOCATION OF ALL EXISTING UTILITIES BEFORE COMMENCING WORK. CONTRACTOR AGREES TO BE FULLY RESPONSIBLE FOR ANY AND ALL DAMAGES WHICH MIGHT BE OCCASIONED BY THE CONTRACTORS FAILURE TO EXACTLY LOCATE AND PRESERVE ANY AND ALL UNDERGROUND UTILITIES.

Bowman CONSULTING
© Bowman Consulting Group, Ltd.
5601 Democracy Dr.,
Ste 215
Plano, Texas 75024
Phone: (972) 497-2590
Fax: (512) 327-4062
www.bowman.com

REVISIONS

REVISION	DESCRIPTION	DATE
1		

SITE PLAN

WHATABURGER
NEC 98TH ST. & VOLCANO RD.
ALBUQUERQUE, NM 87124

Kofi Addo-Nyarko
NEW MEXICO
25552
PROFESSIONAL ENGINEER
1/7/2022

DESIGN	DRAWN	CHKD
BB	BB	KAN

JOB No. 070426-01-001

SHEET
C2.0

PRELIMINARY NOT FOR CONSTRUCTION

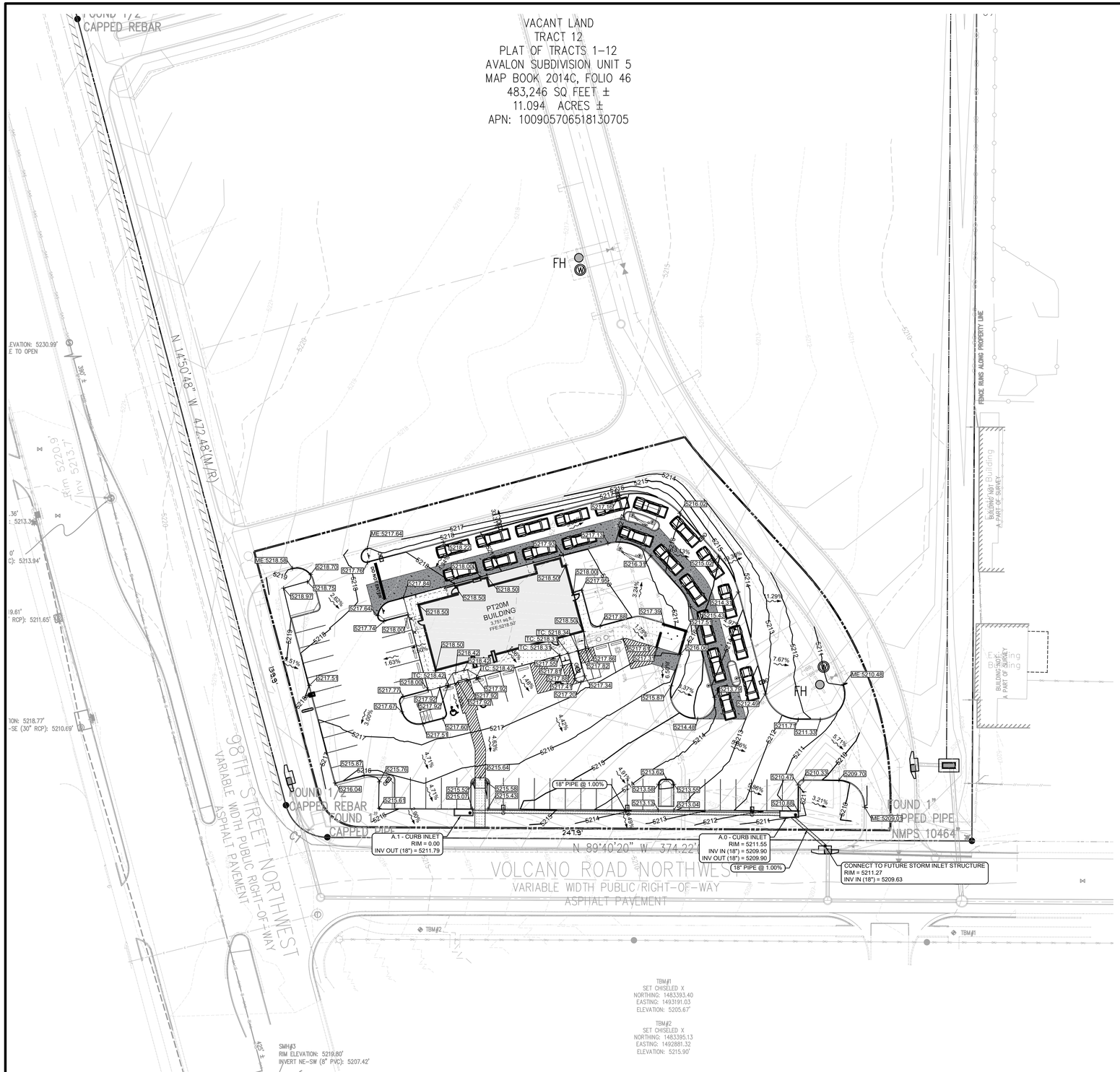

BENCHMARKS

TBM #1	TBM - SET CHISELED X (1483393.40, 1493191.03)	ELEV: 5205.67'
TBM #2	TBM - SET CHISELED X (1483395.13, 1492881.32)	ELEV: 5215.90'

GRADING LEGEND

- PROPOSED BUILDING
- PROPERTY LINE
- STD. 6" CONCRETE CURB
- PROPOSED CONTOUR — 430
- EXISTING CONTOUR — 430
- DIRECTION OF FLOW — 2.30%
- SPOT ELEVATION — 843.56
- EXISTING GRADE TIE IN — ME: 843.56
- TOP OF CURB — TC: 843.56
- BOTTOM OF CURB — BC: 843.56
- STORM CATCH BASIN
- STORM PIPE

EXISTING LEGEND

- FOUND MONUMENT (AS NOTED)
- TEMPORARY BENCHMARK
- TELEPHONE MANHOLE
- SEWER MANHOLE
- DRAINAGE MANHOLE
- FIRE HYDRANT
- WATER VALVE
- DRAINAGE INLET
- SIGN
- (M) MEASURED/CALCULATED DIMENSION
- (R) RECORD DIMENSION
- N/F NOW OR FORMERLY
- R/W RIGHT-OF-WAY
- TBM TEMPORARY BENCHMARK
- RCP REINFORCED CONCRETE PIPE
- PVC POLYVINYL CHLORIDE PIPE
- BOC BACK OF CURB
- FL FLOW LINE
- EA EDGE OF ASPHALT
- TC TOP OF CONCRETE
- TA TOP OF ASPHALT
- TB TOP OF BANK
- BB BOTTOM OF BANK
- NG NATURAL GROUND
- BUILDING OVERHANG
- CENTERLINE
- S UNDERGROUND SEWER LINE
- UNDERGROUND STORM DRAIN LINE
- SUBJECT PROPERTY LINE

30 0 30 60
SCALE: 1 INCH = 30 FT

GRADING NOTES

1. THE CONTRACTOR IS SPECIFICALLY CAUTIONED THAT THE LOCATION AND/OR ELEVATION OF ALL EXISTING UTILITIES (ABOVE AND BELOW GROUND) AS SHOWN ON THESE PLANS ARE APPROXIMATE AND WERE LOCATED BASED ON EITHER VISUAL OBSERVATIONS AT THE SITE, EXISTING SURVEYS, AND/OR FROM UTILITY OWNERS. THE OWNER DOES NOT GUARANTEE THAT EXISTING UTILITY LOCATIONS ARE EXACT. IT SHALL BE THE RESPONSIBILITY OF THE CONTRACTOR TO DETERMINE THE EXACT LOCATIONS OF EXISTING UTILITIES(ABOVE AND BELOW GROUND) BEFORE BEGINNING ANY CONSTRUCTION. THE CONTRACTOR SHALL CALL APPROPRIATE UTILITY COMPANIES AND THE UTILITIES PROTECTION CENTER AT LEAST 72 HOURS BEFORE ANY EXCAVATION TO REQUEST EXACT FIELD LOCATIONS OF UTILITIES. IT SHALL BE THE RESPONSIBILITY OF THE CONTRACTOR TO NOTIFY OWNER AND/OR ENGINEER OF ANY UTILITY CONFLICTS WITH THE PROPOSED IMPROVEMENTS SHOWN ON THE PLANS.
2. ALL STORM SEWER MANHOLES IN PAVED AREAS SHALL BE FLUSH WITH PAVEMENT, AND SHALL HAVE TRAFFIC BEARING RING AND COVERS. MANHOLES IN UNPAVED AREAS SHALL BE 6" ABOVE FINISH GRADE. LIDS SHALL BE LABELED "STORM SEWER".
3. CONTRACTOR SHALL ASSURE POSITIVE DRAINAGE AWAY FROM BUILDING AND FOR ALL NATURAL AND PAVED AREAS.
4. CONSTRUCTION SHALL COMPLY WITH ALL APPLICABLE GOVERNING CODES AND BE CONSTRUCTED TO SAME.
5. CONTRACTOR TO REVIEW GEOTECHNICAL REPORT PROVIDED BY THE OWNER.
6. ALL PROPOSED SPOT ELEVATIONS ARE PAVEMENT GRADES, UNLESS OTHERWISE NOTED, TOP OF CURB ELEVATIONS ARE 6 INCH ABOVE ELEVATIONS SHOWN ON THIS PLAN.
7. ALL ELEVATIONS PRESENTED IN THESE PLANS ARE RELATIVE TO THE NORTH AMERICAN VERTICAL DATUM OF NAVD 88.
8. THE CONTRACTOR SHALL BE RESPONSIBLE FOR MANAGING CONSTRUCTION ACTIVITIES TO ENSURE THAT PUBLIC STREETS AND RIGHT-OF-WAYS ARE KEPT CLEAN OF MUD, DUST OR DEBRIS. DUST ABATEMENT SHALL BE MAINTAINED BY ADEQUATE WATERING OF THE SITE BY THE CONTRACTOR.
9. CLEAR AND GRUB WITHIN WORK LIMITS FOR ALL SURFACE VEGETATION, TREES, STUMPS, BRUSH, ROOTS, ETC. DO NOT DAMAGE OR REMOVE TRESS EXCEPT AS APPROVED BY THE ENGINEER OR AS SHOWN ON THE DRAWINGS. PROTECT ALL ROOTS TWO INCHES IN DIAMETER OR LARGER.
10. STRIP WORK LIMITS, REMOVING ALL ORGANIC MATTER WHICH CANNOT BE COMPACTED INTO A STABLE MASS. ALL TRESS, BRUSH, AND DEBRIS ASSOCIATED WITH CLEARING, STRIPPING OR GRADING SHALL BE REMOVED AND DISPOSED OFF SITE BY THE CONTRACTOR.
11. UNLESS OTHERWISE SHOWN ON THE DRAWINGS, STRAIGHT GRADES SHALL BE RUN BETWEEN ALL FINISH GRADE ELEVATIONS AND/OR FINISH CONTOUR LINES SHOWN. FINISH PAVEMENT GRADES AT TRANSITION TO EXISTING PAVEMENT SHALL MATCH EXISTING PAVEMENT GRADES OR SHALL BE FEATHERED PAST JOINTS WITH EXISTING PAVEMENT AS REQUIRED TO PROVIDE A SMOOTH, FREE DRAINAGE SURFACE.
12. ALL EXISTING AND CONSTRUCTED MANHOLES, CLEANOUTS, MONUMENTS, GAS VALVES, WATER VALVES, AND SIMILAR STRUCTURES SHALL BE ADJUSTED TO MATCH FINISH GRADE OF THE PAVEMENT, SIDEWALK, LANDSCAPED AREA, OR MEDIAN STRIP WHEREIN THEY LIE.

ADA NOTES

1. THE DESIGN PROFESSIONAL SIGNING THIS DOCUMENT REPRESENTS THAT TO THE BEST OF HIS/HER PROFESSIONAL JUDGEMENT, KNOWLEDGE, AND BELIEF THE DESIGN SPECIFICATIONS HEREIN COMPLY WITH THE AMERICANS WITH DISABILITIES ACT (ADA).
2. ALL GRADES/SLOPES SHOWN ON THIS PLAN WERE DESIGNED AT OR BELOW MAXIMUMS ALLOWED BY THE AMERICANS WITH DISABILITIES ACT (ADA). IT IS THE CONTRACTOR'S RESPONSIBILITY TO FAMILIARIZE THEMSELVES WITH THE AMERICANS WITH DISABILITIES ACT (ADA) ACCESSIBILITY GUIDELINES, AND THE ADA DESIGN MANUAL. IN THE EVENT THAT A DESIGN QUESTION SHOULD ARISE, OR A FIELD CONDITION PRESENT ITSELF THAT IS DIFFERENT FROM THOSE SHOWN ON THESE PLANS, WORK SHOULD CEASE AND THE ENGINEER SHOULD BE NOTIFIED SO THAT AN ACCEPTABLE SOLUTION CAN BE DETERMINED.
3. THE CONTRACTOR IS ADVISED TO CAREFULLY CHECK ALL THE PHASES OF WORK RELATING TO ADA ACCESSIBILITY FOR THIS PROJECT. SINCE THE CODE DOES NOT ALLOW FOR CONSTRUCTION TOLERANCE, ANY CONSTRUCTION THAT EXCEEDS MAXIMUM OR MINIMUM DIMENSIONS AND SLOPES AS REQUIRED BY ADA ARE SUBJECT TO REJECTION AND MAY BE REQUIRED TO BE REMOVED AND REPLACED AT THE CONTRACTOR'S EXPENSE.
4. SINCE THE CIVIL ENGINEER OR SURVEYOR CANNOT CONTROL THE EXACT METHODS OR MEANS USED BY THE GENERAL CONTRACTOR OR THEIR SUBCONTRACTORS DURING GRADING AND CONSTRUCTION OF THE PROJECT, THE CIVIL ENGINEER OR SURVEYOR ASSUMES NO RESPONSIBILITY FOR THE FINAL ACCEPTANCE OF AMERICANS WITH DISABILITIES ACT ACCESSIBILITY RELATED ITEMS BY THE CITY, ANY OTHER AUTHORITY, OR AFFECTED PARTIES.

NOTE

SITE GRADING SUBJECT TO CHANGE BASED ON OFF-SITE IMPROVEMENT INFORMATION FROM PROPERTY OWNER.

811 Know what's below. Call before you dig.

THE LOCATION OF EXISTING UNDERGROUND UTILITIES ARE SHOWN IN AN APPROXIMATE WAY ONLY. THE CONTRACTOR SHALL DETERMINE THE EXACT LOCATION OF ALL EXISTING UTILITIES BEFORE COMMENCING WORK. CONTRACTOR AGREES TO BE FULLY RESPONSIBLE FOR ANY AND ALL DAMAGES WHICH MIGHT BE OCCASIONED BY THE CONTRACTORS FAILURE TO EXACTLY LOCATE AND PRESERVE ANY AND ALL UNDERGROUND UTILITIES.

Bowman CONSULTING
© Bowman Consulting Group, Ltd.
5601 Democracy Dr., Ste 205
Plano, Texas 75024
Phone: (972) 497-2990
Fax: (512) 327-4062
www.bowman.com

REVISIONS

REVISION	DESCRIPTION	DATE
1		

GRADING & DRAINAGE PLAN

WHATABURGER
NEC 98TH ST. & VOLCANO RD.
ALBUQUERQUE, NM 87124

Kofi Addo-Nyarko
NEW MEXICO
25552
PROFESSIONAL ENGINEER
1/7/2022

DESIGN	DRAWN	CHKD
BB	BB	KAN

JOB No. 070426-01-001

SHEET
C3.0

PRELIMINARY NOT FOR CONSTRUCTION

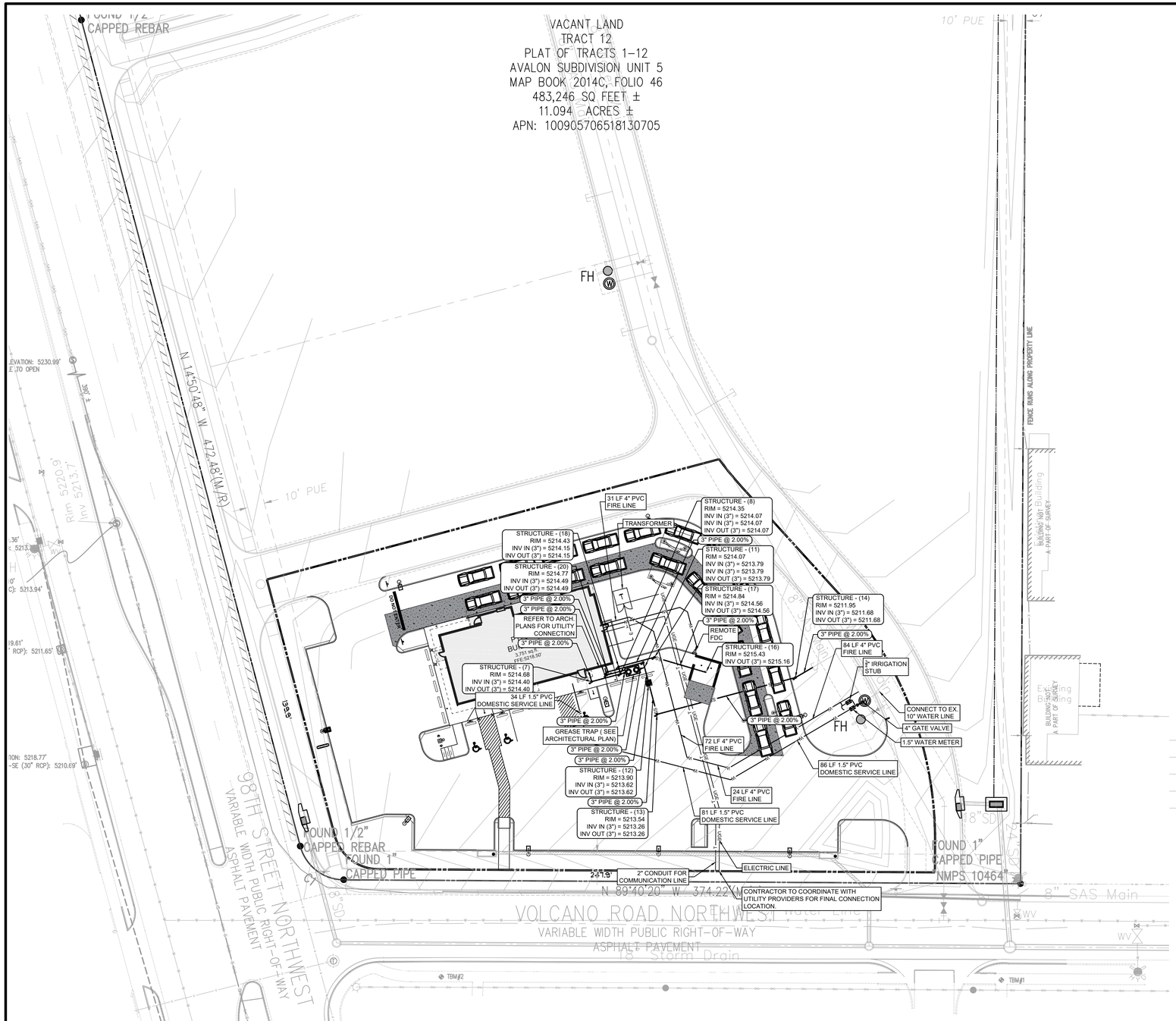

TBM#1
SET CHISELED X
NORTHING: 1483393.40
EASTING: 1493191.03
ELEVATION: 5205.67'

TBM#2
SET CHISELED X
NORTHING: 1483395.13
EASTING: 1492881.32
ELEVATION: 5215.90'

BENCHMARKS

TBM #1	TBM - SET CHISELED X (1483393.40, 1493191.03)	ELEV: 5205.67'
TBM #2	TBM - SET CHISELED X (1483395.13, 1492881.32)	ELEV: 5215.90'

UTILITY LEGEND

PROPERTY LINE
WATER LINE — W —
SANITARY LINE — SS —
ELECTRIC LINE — E — E —
GAS LINE — G —
FIRE HYDRANT
WATER METER
GATE VALVE
CLEANOUT
LIGHT POLE
TRANSFORMER

EXISTING LEGEND

FOUND MONUMENT (AS NOTED)
TEMPORARY BENCHMARK
TELEPHONE MANHOLE
SEWER MANHOLE
DRAINAGE MANHOLE
FIRE HYDRANT
WATER VALVE
DRAINAGE INLET
SIGN
(M) MEASURED/CALCULATED DIMENSION
(R) RECORD DIMENSION
N/F NOW OR FORMERLY
R/W RIGHT-OF-WAY
TBM TEMPORARY BENCHMARK
RCP REINFORCED CONCRETE PIPE
PVC POLYVINYL CHLORIDE PIPE
BOC BACK OF CURB
FL FLOW LINE
EA EDGE OF ASPHALT
TC TOP OF CONCRETE
TA TOP OF ASPHALT
TB TOP OF BANK
BB BOTTOM OF BANK
NG NATURAL GROUND
BUILDING OVERHANG
CENTERLINE
S — UNDERGROUND SEWER LINE
UNDERGROUND STORM DRAIN LINE
SUBJECT PROPERTY LINE

30 0 30 60
SCALE: 1 INCH = 30 FT

UTILITY NOTES

1. CONTRACTOR SHALL PROTECT ALL EXISTING UTILITIES AND IS RESPONSIBLE TO REPAIR ANY DAMAGE TO EXISTING UTILITIES DURING CONSTRUCTION AT NO COST TO THE OWNER.
2. ALL UTILITIES ARE SHOWN FROM INFORMATION GATHERED AND SHOULD NOT BE USED AS EXACT. CONTRACTOR SHALL VERIFY EXACT DEPTHS AND LOCATIONS PRIOR TO UTILITY INSTALLATION AND NOTIFY THE ENGINEER OF RECORD IF THERE ARE ANY DEVIATIONS ROM WHAT IS SHOWN ON PLANS.
3. CONTRACTOR SHALL CONTACT THE APPROPRIATE UTILITY COMPANY FOR INSTALLATION AND SPECIFICATION REQUIREMENTS.
4. ALL PIPE MATERIALS SHALL COMPLY WITH LOCAL REGULATIONS.
5. ALL TRENCHING AND BEDDING SHALL BE PER THE UTILITY TRENCH AND BEDDING DETAIL.
6. CONTRACTOR SHALL REFER TO ARCHITECTURAL PLANS FOR ALL BUILDING UTILITY TIE INS.
7. THE CONTRACTOR IS TO FIELD VERIFY THE EXACT LOCATIONS AND DEPTHS OF UTILITY LINES.
8. ALL CERTIFICATES AND SHOP DRAWINGS MUST BE SUBMITTED, REVIEWED, AND APPROVED PRIOR TO STARTING CONSTRUCTION.
9. CONTRACTOR TO PROVIDE AS-BUILTS OF ALL IMPROVEMENTS TO THE SITE. AS-BUILTS TO INCLUDE HORIZONTAL AND VERTICAL LOCATIONS OF ALL UNDERGROUND UTILITIES INCLUDING, BUT NOT LIMITED TO, PIPES, FITTINGS, STRUCTURES, AND OTHER APPURTENANCES. ELEVATIONS OF PIPES AT CROSSING POINTS MUST BE SUFFICIENT TO IDENTIFY MINIMUM SEPARATION OF UTILITIES AS DEFINED BY ENGINEER. IN ADDITION TO THE AFOREMENTIONED CRITERIA, AS-BUILTS MUST MEET ALL LOCAL AND JURISDICTIONAL REQUIREMENTS FOR CERTIFICATION OF CONSTRUCT.
10. UNDERGROUND UTILITIES TO BE FIELD VERIFIED IN RIGHT-OF-WAY WORK WITH EXISTING UTILITIES.
11. UTILITY CONNECTIONS ARE SHOWN TO WITHIN 5 FEET OF THE BUILDING. CONTRACTOR TO REFER TO BUILDING PLANS FOR EXACT CONNECTION POINTS ON BUILDING AND VERIFY THAT THERE ARE NO CONFLICTS PRIOR TO START OF CONSTRUCTION.

CONTRACTOR MUST REFER TO ARCHITECTURAL PLANS FOR EXACT BUILDING DIMENSIONS AND LOCATIONS OF ALL OUTSIDE DOORS AND BUILDING UTILITIES.

CONTRACTOR MUST COORDINATE ALL UTILITY CONNECTIONS SUCH AS ELECTRIC, GAS CABLE, TELEPHONE, WATER, SANITARY SEWER, STORM DRAINAGE WITH UTILITY PROVIDERS.

811 Know what's below. Call before you dig.

THE LOCATION OF EXISTING UNDERGROUND UTILITIES ARE SHOWN IN AN APPROXIMATE WAY ONLY. THE CONTRACTOR SHALL DETERMINE THE EXACT LOCATION OF ALL EXISTING UTILITIES BEFORE COMMENCING WORK. CONTRACTOR AGREES TO BE FULLY RESPONSIBLE FOR ANY AND ALL DAMAGES WHICH MIGHT BE OCCASIONED BY THE CONTRACTORS FAILURE TO EXACTLY LOCATE AND PRESERVE ANY AND ALL UNDERGROUND UTILITIES.

Bowman CONSULTING
© Bowman Consulting Group, Ltd.
5601 Democracy Dr., Ste 205
Plano, Texas 75024
Phone: (972) 497-2990
Fax: (512) 327-4062
www.bowman.com

REVISIONS

REVISION	DESCRIPTION	DATE
1		

UTILITY PLAN

WHATABURGER
NEC 98TH ST. & VOLCANO RD.
ALBUQUERQUE, NM 87124

Kofi Addo-Nyarko
NEW MEXICO
25552
PROFESSIONAL ENGINEER
1/7/2022

DESIGN	DRAWN	CHKD
BB	BB	KAN

JOB No. 070426-01-001

SHEET
C5.0

PRELIMINARY NOT FOR CONSTRUCTION

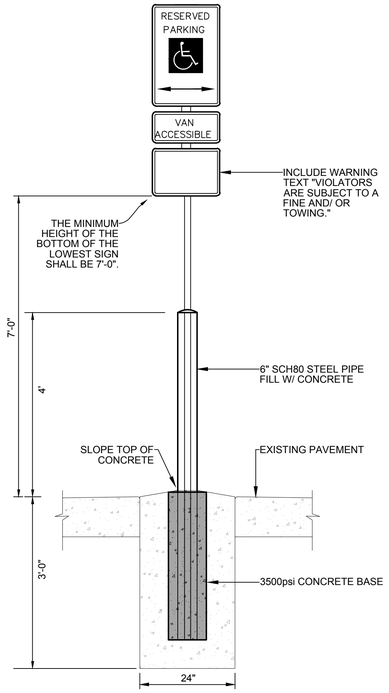

SIGN MOUNTING WITH BOLLARD
NTS

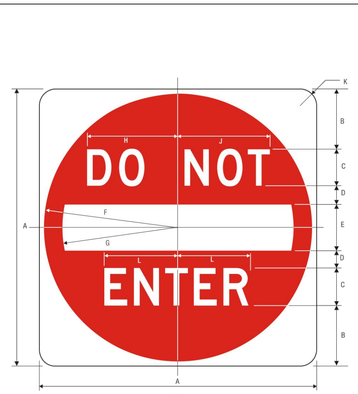

	A	B	C	D	E	F	G	H	J	K	L
C	30	6.5	4 D	2	5	14.5	12.5	9.75	10	1.875	7.875
	36	7.5	5 D	2.5	6	17.5	15	12	12.375	2.25	9.813
	48	11	6 D	3	8	23.5	20	14.5	15	3	11.75

COLORS: SYMBOL – RED (RETROREFLECTIVE)
LEGEND & BACKGROUND – WHITE (RETROREFLECTIVE)

1-73

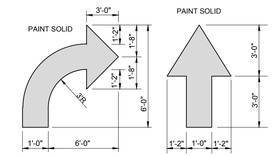

DIRECTIONAL ARROW
NOT TO SCALE

NOTES:
1. CONTRACTOR SHALL USE WHITE REFLECTIVE PAINT ON ASPHALT & YELLOW REFLECTIVE PAINT ON CONCRETE.

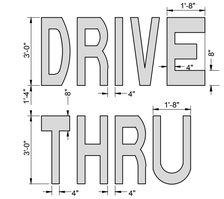

DRIVE-THRU GRAPHICS
NOT TO SCALE

NOTES:
1. CONTRACTOR SHALL USE WHITE REFLECTIVE PAINT ON ASPHALT & YELLOW REFLECTIVE PAINT ON CONCRETE.

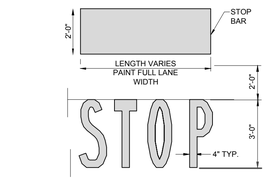

STOP LINE GRAPHIC
NOT TO SCALE

NOTES:
1. CONTRACTOR SHALL USE WHITE REFLECTIVE PAINT ON ASPHALT & YELLOW REFLECTIVE PAINT ON CONCRETE.
2. IF STOP SIGN IS PROPOSED, STOP LINE GRAPHIC IS NOT REQUIRED.

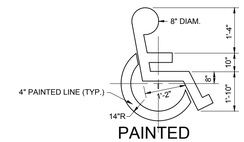

PAINTED ACCESSIBILITY SYMBOL
NOT TO SCALE

NOTES:
1. CONTRACTOR SHALL USE WHITE REFLECTIVE PAINT ON ASPHALT & YELLOW REFLECTIVE PAINT ON CONCRETE, UNLESS UPON VERIFICATION BY THE GENERAL CONTRACTOR IT IS DETERMINED THAT LOCAL, STATE, OR ADA CODES DIFFER, IN WHICH CASE THESE CODES SHALL GOVERN.

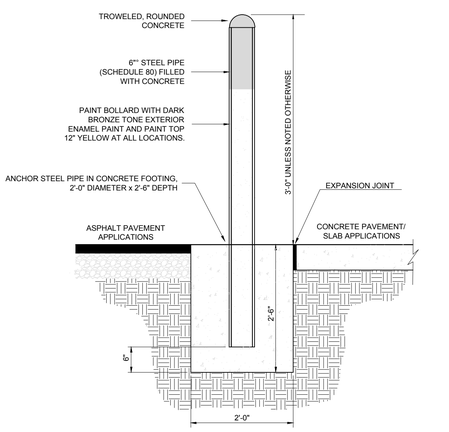

CONCRETE BOLLARD
NOT TO SCALE

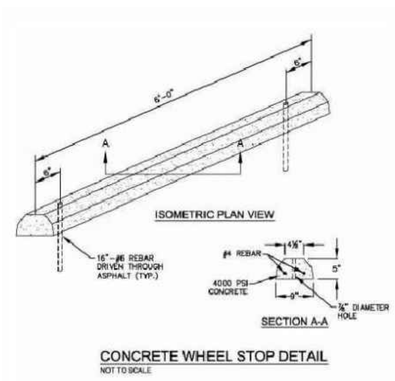

CONCRETE WHEEL STOP DETAIL
NOT TO SCALE

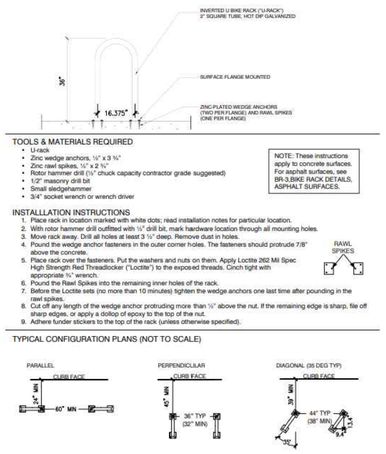

Bowman CONSULTING
© Bowman Consulting Group, Ltd.
5601 Democracy Dr.,
Suite 205
Plano, Texas 75024
Phone: (972) 497-2590
Fax: (512) 327-4062
www.bowman.com

REVISIONS

REVISION	DESCRIPTION	DATE
1		

CONSTRUCTION DETAILS

WHATABURGER
NEC 98TH ST. & VOLCANO RD.
ALBUQUERQUE, NM 87124

Kofi Addo-Nyarko
NEW MEXICO
25552
PROFESSIONAL ENGINEER
1/7/2022

DESIGN	DRAWN	CHKD
BB	BB	KAN

JOB No. 070426-01-001

SHEET
C6.0

PRELIMINARY NOT FOR CONSTRUCTION

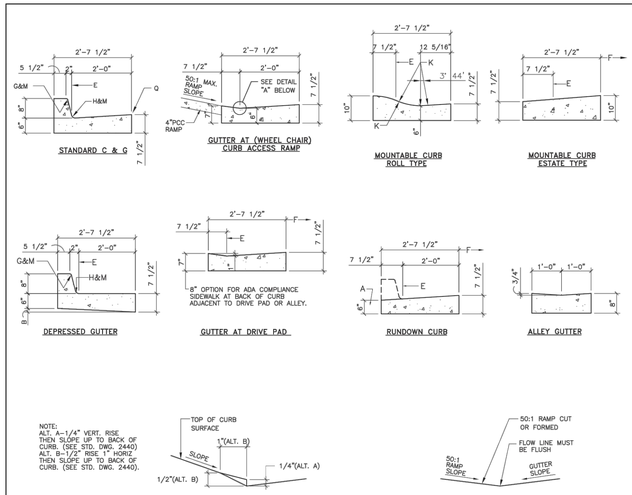

GENERAL NOTES:

1. CURB, GUTTER AND CUT–OFF WALL WILL BE CONSTRUCTED OF PORTLAND CEMENT CONCRETE (PCC).
2. FOR STANDARD AND MEDIAN C&G ADJACENT TO ASPHALT CONCRETE (AC) PAVEMENT, PROVIDE CONTRACTION JOINTS AT 12' MAX. SPACING, CONTRACTION JOINTS SHALL BE EITHER SAWED OR TOOLED A MININUM OF 1" DEEP AT FINISHED FACES. 1/2" EXPANSION JOINTS TO BE INSTALLED AT CURB RETURNS AND AT A MAXIMUM SPACING OF 200' BETWEEN CURB RETURNS AND SEPARATELY CONSTRUCTED DRIVEWAYS.
3. FOR ALL OTHER C & G CUT–OFF WALL PROVIDE CONTRACTION JOINTS AT 10' MAX SPACING, 1/2" EXP. JTS. AT CURB RETURNS & AT A MAXIMUM SPACING OF 100' BETWEEN CURB RETURNS & EACH SIDE OF SEPARATELY CONSTRUCTED DRIVEWAYS. CONTRACTION JOINTS SHALL BE EITHER SAWED OR TOOLED A MINIMUM OF 1" DEEP AT ALL FINISHED FACES. REINFORCEMENT SHALL NOT BE USED IN CUT–OFF WALLS.
4. FOR C & G CONSTRUCTED WITH PCC PAVEMENT, CONTRACTION JOINTS AND EXPANSION JOINTS SHALL BE THE SAME AS THE PAVEMENT JOINTS.
5. ALL EDGES SHALL BE EDGED WITH A 3/8"
6. STANDARD C & G SHALL BE USED FOR NEW CONSTRUCTION UNLESS OTHERWISE AUTHORIZED BY THE CITY ENGINEER.
7. REMOVE & REPLACE PAVEMENT 1" WIDE ADJACENT TO LIP OF GUTTER WHEN CONSTRUCTING C & G ADJACENT TO EXISTING AC PAVEMENT.
8. 1/4" ISOLATION JOINT SHALL BE PLACED BETWEEN SIDEWALK AND C & G WHEN CAST ADJACENT TO EACH OTHER.
9. ADA = AMERICANS WITH DISABILITY ACT.

CONSTRUCTION NOTES:

SEE COA DRAWING 2415B

REVISIONS	CITY OF ALBUQUERQUE
6/91 11/14/91 12/15/92 3/30/94	PAVING CURB AND GUTTER & CURB CUT DETAILS DWG. 2415A JANUARY 2003

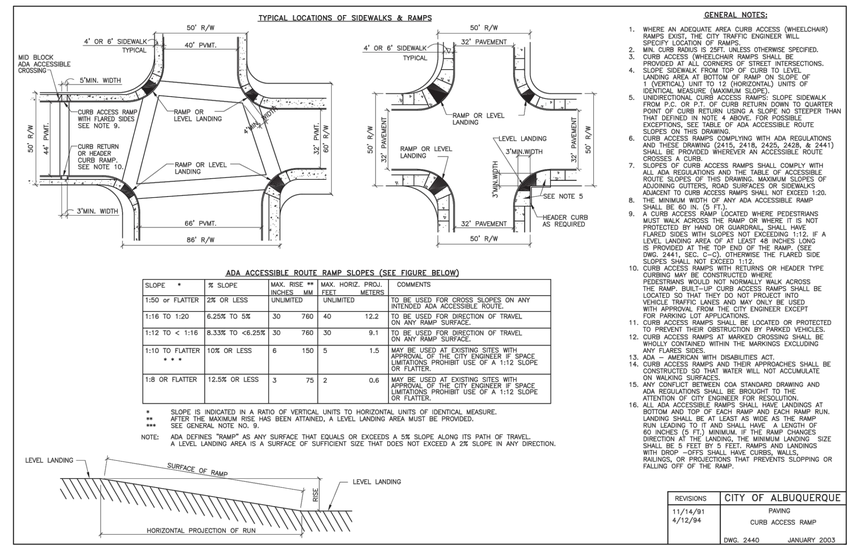

ADA ACCESSIBLE ROUTE RAMP SLOPES (SEE FIGURE BELOW)

SLOPE *	% SLOPE	MAX. RISE ** INCHES MM	MAX. HORIZ. PROJ. FEET METERS	COMMENTS
1:50 or FLATTER	2% OR LESS	UNLIMITED	UNLIMITED	TO BE USED FOR CROSS SLOPES ON ANY INTENDED ADA ACCESSIBLE ROUTE.
1:16 TO 1:20	6.25% TO 5%	30 760	40 12.2	TO BE USED FOR DIRECTION OF TRAVEL ON ANY RAMP SURFACE.
1:12 TO < 1:16	8.33% TO <6.25%	30 760	30 9.1	TO BE USED FOR DIRECTION OF TRAVEL ON ANY RAMP SURFACE.
1:10 TO FLATTER * * *	10% OR LESS	6 150	5 1.5	MAY BE USED AT EXISTING SITES WITH APPROVAL OF THE CITY ENGINEER IF SPACE LIMITATIONS PROHIBIT USE OF A 1:12 SLOPE OR FLATTER.
1:8 OR FLATTER	12.5% OR LESS	3 75	2 0.6	MAY BE USED AT EXISTING SITES WITH APPROVAL OF THE CITY ENGINEER IF SPACE LIMITATIONS PROHIBIT USE OF A 1:12 SLOPE OR FLATTER.

* SLOPE IS INDICATED IN A RATIO OF VERTICAL UNITS TO HORIZONTAL UNITS OF IDENTICAL MEASURE.
** AFTER THE MAXIMUM RISE HAS BEEN ATTAINED, A LEVEL LANDING AREA MUST BE PROVIDED.
*** SEE GENERAL NOTE NO. 9.

NOTE: ADA DEFINES "RAMP" AS ANY SURFACE THAT EQUALS OR EXCEEDS A 5% SLOPE ALONG ITS PATH OF TRAVEL. A LEVEL LANDING AREA IS A SURFACE OF SUFFICIENT SIZE THAT DOES NOT EXCEED A 2% SLOPE IN ANY DIRECTION.

GENERAL NOTES:

1. WHERE AN ADEQUATE AREA CURB ACCESS (WHEELCHAIR) RAMPS EXIST, THE CITY TRAFFIC ENGINEER WILL SPECIFY LOCATION OF RAMPS.
2. MIN. CURB RADIUS IS 25FT. UNLESS OTHERWISE SPECIFIED.
3. CURB ACCESS (WHEELCHAIR) RAMPS SHALL BE PROVIDED AT ALL CORNERS OF STREET INTERSECTIONS.
4. SLOPE SIDEWALK FROM TOP OF CURB TO LEVEL LANDING AREA AT BOTTOM OF RAMP ON SLOPE OF 1 (VERTICAL) UNIT TO 12 (HORIZONTAL) UNITS OF IDENTICAL MEASURE (MAXIMUM SLOPE).
5. UNIDIRECTIONAL CURB ACCESS RAMPS: SLOPE SIDEWALK FROM P.C. OR P.T. OF CURB RETURN DOWN TO QUARTER POINT OF CURB RETURN USING A SLOPE NO STEEPER THAN THAT DEFINED IN NOTE 4 ABOVE. FOR POSSIBLE EXCEPTIONS, SEE TABLE OF ADA ACCESSIBLE ROUTE SLOPES ON THIS DRAWING.
6. CURB ACCESS RAMPS COMPLYING WITH ADA REGULATIONS AND THESE DRAWING (2415, 2418, 2425, 2428, & 2441) SHALL BE PROVIDED WHEREVER AN ACCESSIBLE ROUTE CROSSES A CURB.
7. SLOPES OF CURB ACCESS RAMPS SHALL COMPLY WITH ALL ADA REGULATIONS AND THE TABLE OF ACCESSIBLE ROUTE SLOPES OF THIS DRAWING. MAXIMUM SLOPES OF ADJOINING GUTTERS, ROAD SURFACES OR SIDEWALKS ADJACENT TO CURB ACCESS RAMPS SHALL NOT EXCEED 1:20.
8. THE MINIMUM WIDTH OF ANY ADA ACCESSIBLE RAMP SHALL BE 60 IN. (5 FT.).
9. A CURB ACCESS RAMP LOCATED WHERE PEDESTRIANS MUST WALK ACROSS THE RAMP OR WHERE IT IS NOT PROTECTED BY HAND OR GUARDRAIL, SHALL HAVE FLARED SIDES WITH SLOPES NOT EXCEEDING 1:12. IF A LEVEL LANDING AREA OF AT LEAST 48 INCHES LONG IS PROVIDED AT THE TOP END OF THE RAMP. (SEE DWG. 2441, SEC. C–C), OTHERWISE THE FLARED SIDE SLOPES SHALL NOT EXCEED 1:12.
10. CURB ACCESS RAMPS WITH RETURNS OR HEADER TYPE CURBING MAY BE CONSTRUCTED WHERE PEDESTRIANS WOULD NOT NORMALLY WALK ACROSS THE RAMP. BUILT–UP CURB ACCESS RAMPS SHALL BE LOCATED SO THAT THEY DO NOT PROJECT INTO VEHICULAR TRAFFIC. LANDING AREA MAY ONLY BE USED WITH APPROVAL FROM THE CITY ENGINEER EXCEPT FOR PARKING LOT APPLICATIONS.
11. CURB ACCESS RAMPS SHALL BE LOCATED OR PROTECTED TO PREVENT THEIR OBSTRUCTION BY PARKED VEHICLES.
12. CURB ACCESS RAMPS AT MARKED CROSSING SHALL BE WHOLLY CONTAINED WITHIN THE MARKINGS EXCLUDING ANY FLARES SIDES.
13. ADA – AMERICAN WITH DISABILITIES ACT.
14. CURB ACCESS RAMPS AND THEIR APPROACHES SHALL BE CONSTRUCTED SO THAT WATER WILL NOT ACCUMULATE ON WALKING SURFACES.
15. ANY CONFLICT BETWEEN COA STANDARD DRAWING AND ADA REGULATIONS SHALL BE BROUGHT TO THE ATTENTION OF CITY ENGINEER FOR RESOLUTION.
16. ALL ADA ACCESSIBLE RAMPS SHALL HAVE LANDINGS AT BOTTOM AND TOP OF EACH RAMP AND EACH RAMP RUN. LANDING SHALL BE AT LEAST AS WIDE AS THE RAMP RUN LEADING TO IT AND SHALL HAVE A LENGTH OF 60 INCHES (5 FT.) MINIMUM. IF THE RAMP CHANGES DIRECTION AT THE LANDING, THE MINIMUM LANDING SIZE SHALL BE 5 FEET BY 5 FEET. RAMPS AND LANDINGS WITH DROP –OFFS SHALL HAVE CURBS, WALLS, RAILINGS, OR PROJECTIONS THAT PREVENTS SLOPPING OR FALLING OFF OF THE RAMP.

REVISIONS	CITY OF ALBUQUERQUE
11/14/91 4/12/94	PAVING CURB ACCESS RAMP DWG. 2440 JANUARY 2003

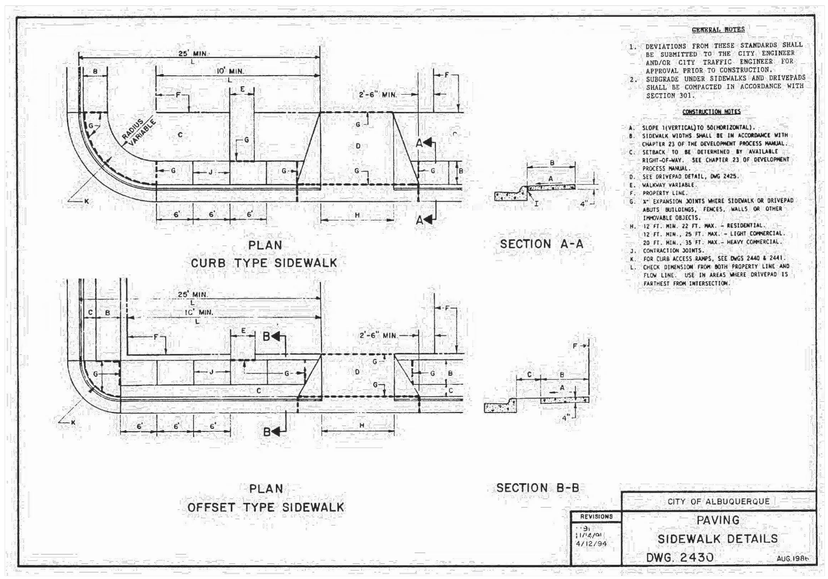

GENERAL NOTES

1. DEVIATIONS FROM THESE STANDARDS SHALL BE SUBMITTED TO THE CITY ENGINEER AND/OR CITY TRAFFIC ENGINEER FOR APPROVAL PRIOR TO CONSTRUCTION.
2. SUBGRADE UNDER SIDEWALKS AND DRIVEPADS SHALL BE COMPACTED IN ACCORDANCE WITH SECTION 301.

CONSTRUCTION NOTES

A. SLOPE 1(VERTICAL)TO 50(HORIZONTAL).
B. SIDEWALK WIDTHS SHALL BE IN ACCORDANCE WITH CHAPTER 23 OF THE DEVELOPMENT PROCESS MANUAL.
C. SETBACK TO BE DETERMINED BY AVAILABLE RIGHT-OF-WAY. SEE CHAPTER 23 OF DEVELOPMENT PROCESS MANUAL.
D. SEE DRIVEPAD DETAIL, DWG 2425.
E. WALKWAY VARIABLE.
F. PROPERTY LINE.
G. 1" EXPANSION JOINTS WHERE SIDEWALK OR DRIVEPAD ABUTS BUILDINGS, FENCES, WALLS OR OTHER IMMOVABLE OBJECTS.
H. 12 FT. MIN. 22 FT. MAX. – RESIDENTIAL. 12 FT. MIN., 25 FT. MAX. – LIGHT COMMERCIAL. 20 FT. MIN., 35 FT. MAX. – HEAVY COMMERCIAL.
J. CONTRACTION JOINTS.
K. FOR CURB ACCESS RAMPS, SEE DWGS 2440 & 2441.
L. CHECK DIMENSIONS FROM BOTH PROPERTY LINE AND FLOW LINE. USE IN AREAS WHERE DRIVEPAD IS FARTHEST FROM INTERSECTION.

REVISIONS	CITY OF ALBUQUERQUE
1/91 11/14/91 4/12/94	PAVING SIDEWALK DETAILS DWG. 2430 AUG.1981

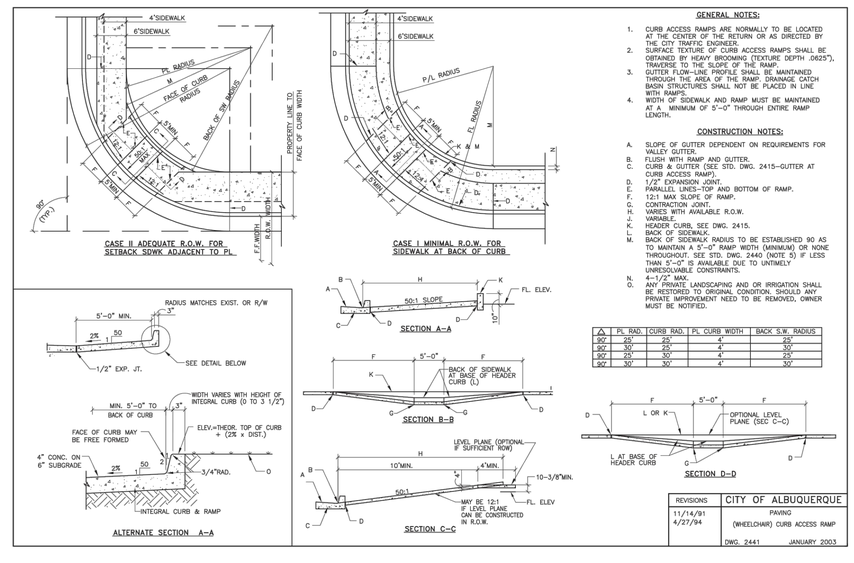

GENERAL NOTES:

1. CURB ACCESS RAMPS ARE NORMALLY TO BE LOCATED AT THE CENTER OF THE RETURN OR AS DIRECTED BY THE CITY TRAFFIC ENGINEER.
2. SURFACE TEXTURE OF CURB ACCESS RAMPS SHALL BE OBTAINED BY HEAVY BROOMING (TEXTURE DEPTH .0625"), TRAVERSE TO THE SLOPE OF THE RAMP.
3. GUTTER FLOW–LINE PROFILE SHALL BE MAINTAINED THROUGH THE AREA OF THE RAMP. DRAINAGE CATCH BASIN STRUCTURES SHALL NOT BE PLACED IN LINE WITH RAMPS.
4. WIDTH OF SIDEWALK AND RAMP MUST BE MAINTAINED AT A MINIMUM OF 5'–0" THROUGH ENTIRE RAMP LENGTH.

CONSTRUCTION NOTES:

A. SLOPE OF GUTTER DEPENDENT ON REQUIREMENTS FOR VALLEY GUTTER.
B. FLUSH WITH RAMP AND GUTTER.
C. CURB & GUTTER (SEE STD. DWG. 2415–GUTTER AT CURB ACCESS RAMP).
D. 1/2" EXPANSION JOINT.
E. PARALLEL LINES–TOP AND BOTTOM OF RAMP.
F. 12:1 MAX SLOPE OF RAMP.
G. CONTRACTION JOINT.
H. VARIES WITH AVAILABLE R.O.W.
J. VARIABLE.
K. HEADER CURB, SEE DWG. 2415.
L. BACK OF SIDEWALK.
M. BACK OF SIDEWALK RADIUS TO BE ESTABLISHED 90 AS TO MAINTAIN A 5'–0" RAMP WIDTH (MINIMUM) OR NONE THROUGHOUT. SEE STD. DWG. 2440 (NOTE 5) IF LESS THAN 5'–0" IS AVAILABLE DUE TO UNTIMELY UNRESOLVABLE CONSTRAINTS.
N. 4–1/2" MAX.
O. ANY PRIVATE LANDSCAPING AND OR IRRIGATION SHALL BE RESTORED TO ORIGINAL CONDITION. SHOULD ANY PRIVATE IMPROVEMENT NEED TO BE REMOVED, OWNER MUST BE NOTIFIED.

△	PL RAD.	CURB RAD.	PL CURB WIDTH	BACK S.W. RADIUS
90°	25'	25'	4'	25'
90°	30'	25'	4'	30'
90°	25'	30'	4'	25'
90°	30'	30'	4'	30'

REVISIONS	CITY OF ALBUQUERQUE
11/14/91 4/27/94	PAVING (WHEELCHAIR) CURB ACCESS RAMP DWG. 2441 JANUARY 2003

Bowman CONSULTING
© Bowman Consulting Group, Ltd.
5601 Democracy Dr.,
Suite 210
Plano, Texas 75024
Phone: (972) 497-2590
Fax: (512) 327-4062
www.bowman.com

REVISIONS

REVISION	DESCRIPTION	DATE
△		

CONSTRUCTION DETAILS

WHATABURGER
NEC 98TH ST. & VOLCANO RD.
ALBUQUERQUE, NM 87124

Kofi Addo-Nyarko
NEW MEXICO
25552
PROFESSIONAL ENGINEER
1/7/2022

DESIGN	DRAWN	CHKD
BB	BB	KAN

JOB No. 070426-01-001

SHEET
C6.1

PRELIMINARY NOT FOR CONSTRUCTION