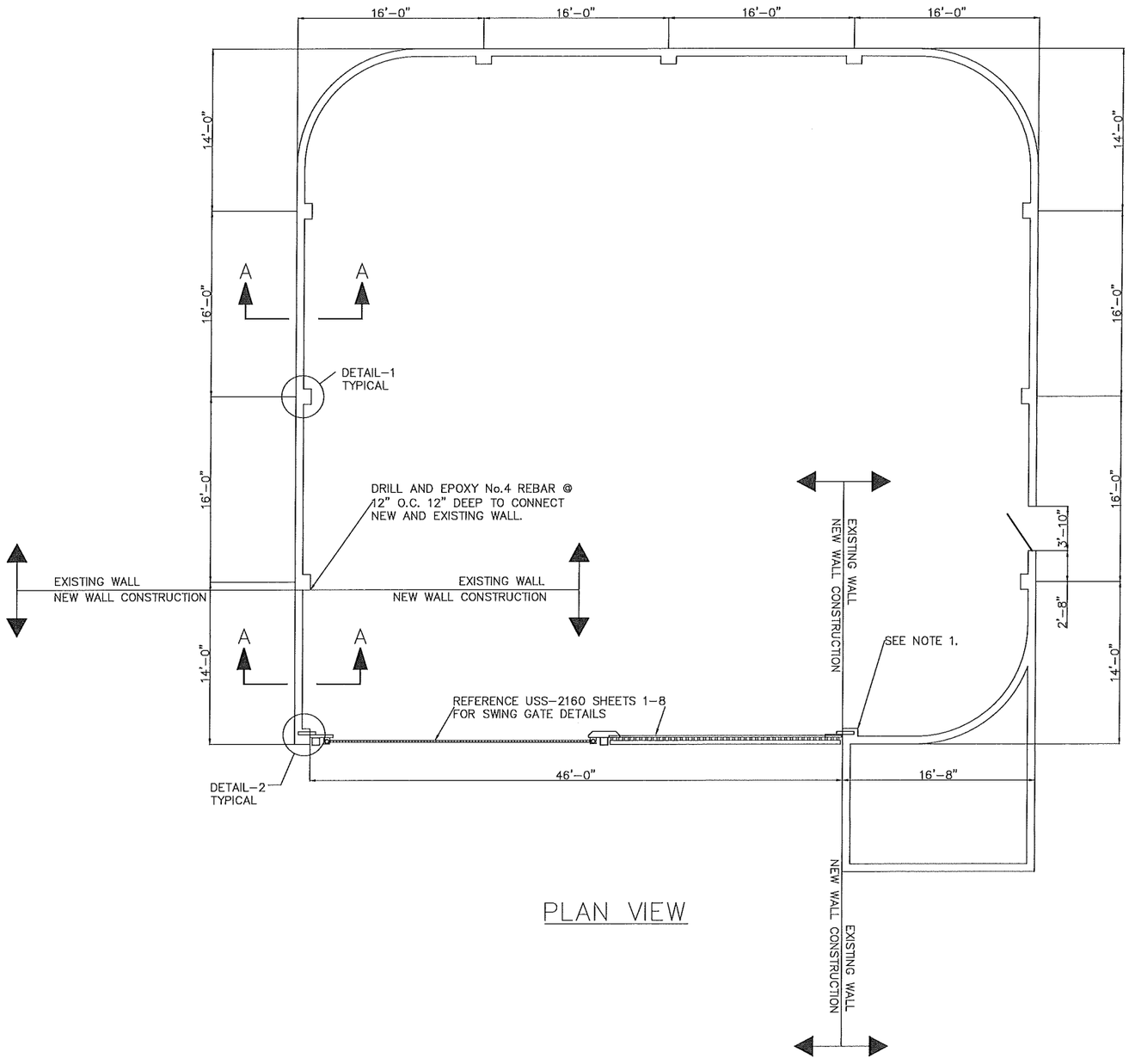

PLAN VIEW

NOTES:

1. REBUILD EXISTING PILASTER FROM TOP TO THE END OF CRACK (TOP 6-7 COURSES). FILL WITH CONCRETE
2. NEW WALL CONSTRUCTION TO MATCH COLOR AND SURFACE FINISH OF EXISTING WALL AS CLOSE AS FEASIBLE.

REVISION			
NO.	DATE	BY	
1	2/24/20	JS	NEW DRAWING
			DRN: CKD: APP:

PROPRIETARY STATEMENT

THIS DOCUMENT AND ALL PREVIOUS ISSUES ARE THE PROPERTY OF PUBLIC SERVICE COMPANY OF NEW MEXICO ("PNM") AND NEITHER RECEIPT NOR POSSESSION THEREOF INFERS OR TRANSFERS: ANY RIGHT IN OR LICENSE TO USE THIS DOCUMENT THE SUBJECT MATTER THEREOF OR ANY DESIGN OR TECHNICAL INFORMATION SHOWN THEREON OR ANY RIGHT TO REPRODUCE THIS DOCUMENT OR ANY PART THEREOF. NEITHER THIS DOCUMENT NOR ANY INFORMATION CONTAINED THEREIN MAY BE COPIED, REPRODUCED, OR OTHERWISE USED OR DISCLOSED TO ANY OTHER PARTY WITHOUT FIRST OBTAINING THE EXPRESS WRITTEN PERMISSION OF PNM. THIS DOCUMENT IS PROVIDED UNDER THE EXPRESS CONDITION THAT IT WILL BE HELD IN CONFIDENCE BY THE RECIPIENT, THAT IT IS SUBJECT TO RETURN UPON DEMAND, AND THAT IT WILL NOT BE USED IN ANY WAY DETRIMENTAL TO PNM.

PNM PUBLIC SERVICE COMPANY OF NEW MEXICO

ENCLOSING WALL DETAILS
PLOT PLAN
EASTRIDGE UNIT SUBSTATION

DR: JS	TR:	DATE: 2/24/20
CKD:	OK:	SCALE: 1"=5'-0"
APP:	ACAD FILE: USS2150	USS-2150S1
REV. NO. 1		

BILL OF MATERIAL	
MATERIAL	QUANTITY
#5 REBAR 60 KSI	APPROX. 265 LINEAR FEET
#2 REBAR 60 KSI	APPROX. 84 LINEAR FEET
CONCRETE 4,000 PSI IN 28 DAYS	APPROX. 3.5 CUBIC YDS.

REBAR SCHEDULE			
SIZE DIAM.	QUAN.	LENGTH	SHAPE
#5	2	14'-4"	STRAIGHT
#5	8	14'-0"	STRAIGHT
#2	28	3'-0"	TIES
#5	14	2'-3"	STRAIGHT
#5	20	3'-0"	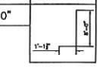

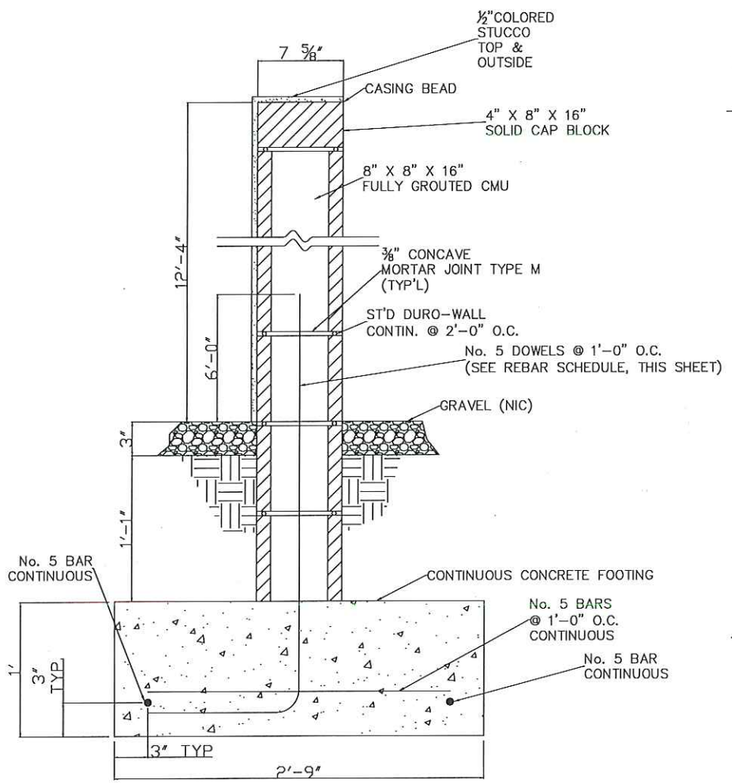

SECTION A-A

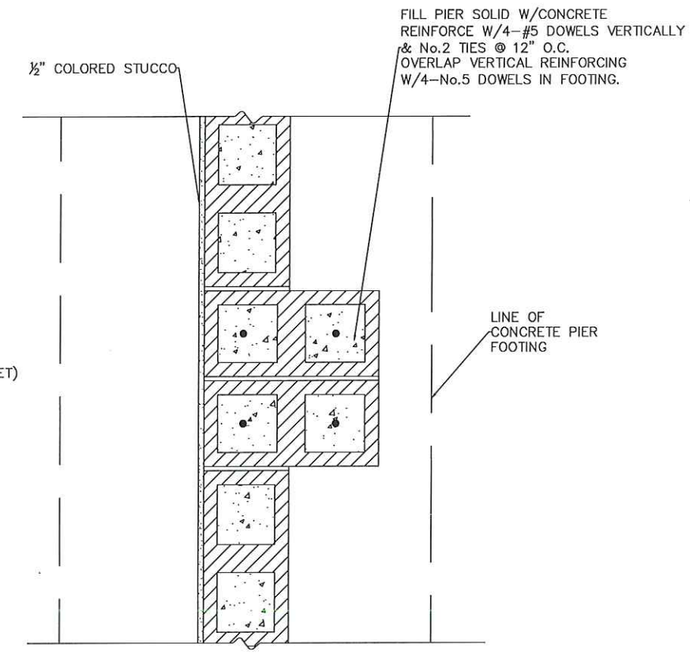

DETAIL-1

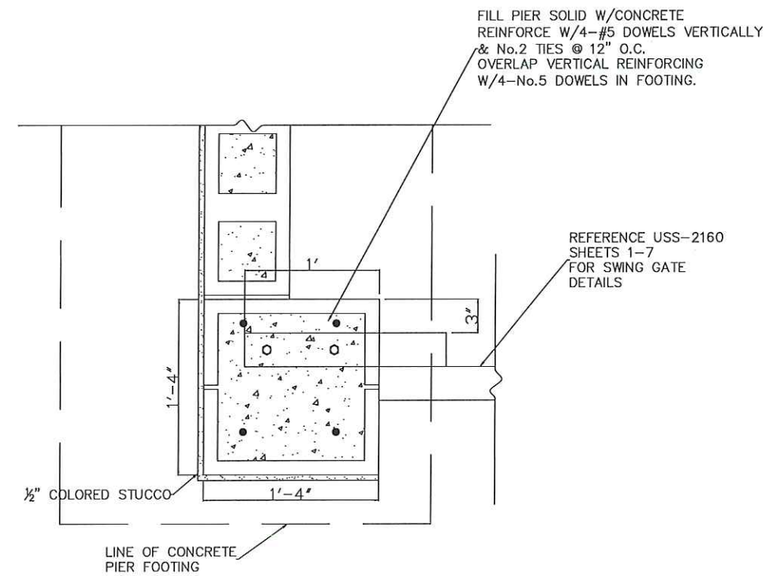

DETAIL-2

REVISION			
NO.	DATE	BY	
1	2/24/20	JS	NEW DRAWING
CHKD:	DKD:	APP:	

PROPRIETARY STATEMENT

THIS DOCUMENT AND ALL PREVIOUS ISSUES ARE THE PROPERTY OF PUBLIC SERVICE COMPANY OF NEW MEXICO ("PNM") AND NEITHER RECEIPT NOR POSSESSION THEREOF IMPERS OR TRANSFERS ANY RIGHT IN OR LICENSE TO USE THIS DOCUMENT THE SUBJECT MATTER THEREOF OR ANY DESIGN OR TECHNICAL INFORMATION SHOWN THEREON OR ANY RIGHT TO REPRODUCE THIS DOCUMENT OR ANY PART THEREOF. NEITHER THIS DOCUMENT NOR ANY INFORMATION CONTAINED THEREIN MAY BE COPIED, REPRODUCED, OR OTHERWISE USED OR DISCLOSED TO ANY OTHER PARTY WITHOUT FIRST OBTAINING THE EXPRESS WRITTEN PERMISSION OF PNM. THIS DOCUMENT IS PROVIDED UNDER THE EXPRESS CONDITION THAT IT WILL BE HELD IN CONFIDENCE BY THE RECIPIENT, THAT IT IS SUBJECT TO RETURN UPON DEMAND, AND THAT IT WILL NOT BE USED IN ANY WAY DETRIMENTAL TO PNM.

PNM PUBLIC SERVICE COMPANY OF NEW MEXICO

ENCLOSING WALL DETAILS
SECTION AND DETAIL VIEWS
EASTRIDGE UNIT SUBSTATION

DR: JS	TR:	DATE: 2/24/20
CKD:	OK:	SCALE: 2"=1'-0"
APP:	ACAD FILE: USS2150	USS-2150S2
REV. NO. 1		

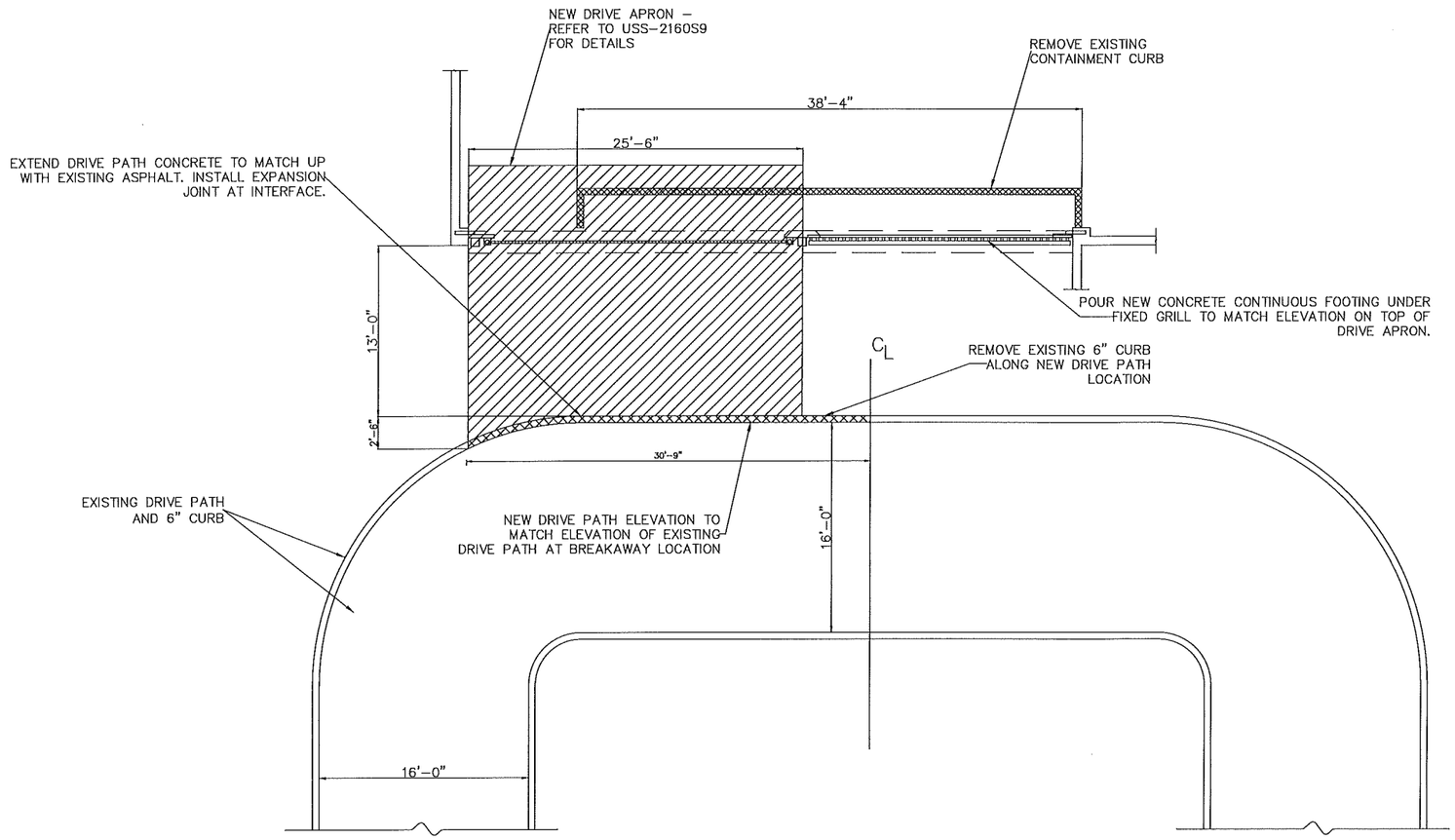

PLAN VIEW

NORTH

NOTES:

1. TOP OF CONCRETE ON DRIVE APRON TO BE AT LEAST 6" ABOVE GRAVEL GRADE ON INSIDE OF THE STATION.

CHRISTOPHER M. BUDD
NEW MEXICO
0917
12/31/
REGISTERED PROFESSIONAL ENGINEER

REMOVAL

NEW CONSTRUCTION

REVISION			
NO.	DATE	BY	
1	2/24/20	JS	NEW DRAWING
CHKD:	ORIG:	APP:	

PROPRIETARY STATEMENT

THIS DOCUMENT AND ALL PREVIOUS ISSUES ARE THE PROPERTY OF PUBLIC SERVICE COMPANY OF NEW MEXICO ("PNM") AND NEITHER RECEIPT NOR POSSESSION THEREOF OFFERS OR TRANSFERS: ANY RIGHT IN OR LICENSE TO USE THIS DOCUMENT THE SUBJECT MATTER THEREOF OR ANY DESIGN OR TECHNICAL INFORMATION SHOWN THEREON OR ANY RIGHT TO REPRODUCE THIS DOCUMENT OR ANY PART THEREOF. NEITHER THIS DOCUMENT NOR ANY INFORMATION CONTAINED THEREIN MAY BE COPIED, REPRODUCED, OR OTHERWISE USED OR DISCLOSED TO ANY OTHER PARTY WITHOUT FIRST OBTAINING THE EXPRESS WRITTEN PERMISSION OF PNM. THIS DOCUMENT IS PROVIDED UNDER THE EXPRESS CONDITION THAT IT WILL BE HELD IN CONFIDENCE BY THE RECIPIENT, THAT IT IS SUBJECT TO RETURN UPON DEMAND, AND THAT IT WILL NOT BE USED IN ANY WAY DETRIMENTAL TO PNM.

PNM PUBLIC SERVICE COMPANY OF NEW MEXICO

ENCLOSING WALL DETAILS
DRIVE APRON PLAN VIEW
EASTRIDGE UNIT SUBSTATION

DR: JS	TR:	DATE: 2/24/20
CKD:	OK:	SCALE: 1"=5'–0"
APP:	ACAD FILE: USS2150	USS–2150S3
REV. NO. 1		

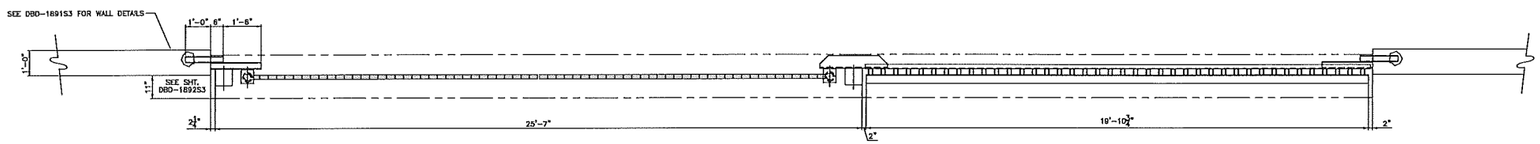

TOP VIEW SWING GRILL ASSEMBLY
SCALE: 3/8" = 1'-0"

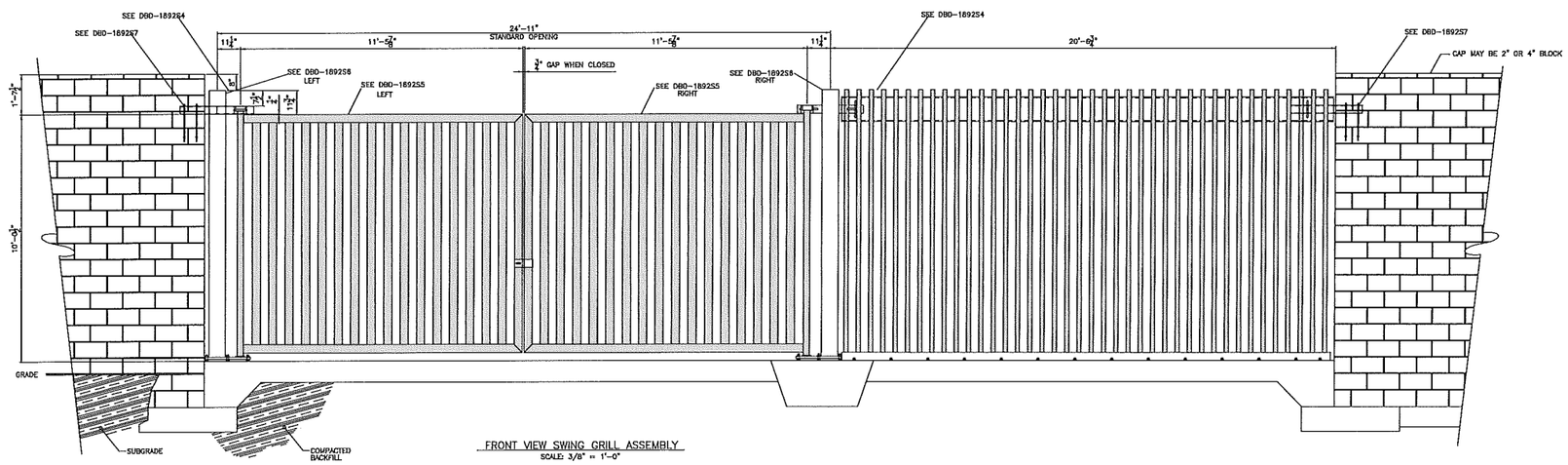

FRONT VIEW SWING GRILL ASSEMBLY
SCALE: 3/8" = 1'-0"

BILL OF MATERIALS					
ITEM #	ASSEMBLED ITEM MATERIALS	PIECE DESCRIPTION	QTY.	ITEM EXT. QTY.	SHEET #
SWING GATE ASSEMBLY:			1	2	S5
5A	TS 4"x2"x11 GA.	HORIZONTAL FRAME TUBING	2	4	S5
5B	TS 4"x2"x11 GA	VERTICAL FRAME TUBING	1	2	S5
5C	TS 4"x2"x11 GA	VERTICAL RIB	16	32	S5
5D	ID Ø 3.548, 3 1/2" STD. WEIGHT PIPE	HINGE PIPE	1	2	S5
5E	1/4" STEEL PLATE	GUSSET	1	2	S5
5F	3"x1-1/2", 5/16" U-BOLT	U-BOLT (LOCK ASSEMBLY)	1	1	S5
3A	1/4" STEEL PLATE	LOCK PLATE (LOCK ASSEMBLY)	1	1	S3
3B	3'X1"ø ROD W/ WELDED TAB AND COLLAR	STOP ROD	1	2	S3
5G	1/8" NPT GREASE NIPPLE	GREASE NIPPLE	1	2	S5
COLUMN ASSEMBLY:			1	2	S6
6A	8"x8"3/8" HSS	COLUMN SQUARE TUBING	1	2	S6
6B	1"xA36	COLUMN BASE PLATE	1	2	S6
6C	L 6"x4"x5/16"	HINGE ADJUSTER	1	1	S6
6D	IDø 3.348, 3-1/2" STD. WEIGHT PIPE	HINGE REST	1	2	S6
6E	ODø 3.5", 3" STD. WEIGHT PIPE	LOWER HINGE PIPE	1	2	S6
6F	1" STEEL PIPE	WEB	4	8	S6
6G	ODø 4.5", 4" STD. WEIGHT PIPE	HINGE	1	2	S6
6G	L 6"x4"x5/16" ANGLE	HINGE	1	2	S6
6J	1/2" BRASS PLATE	BRASS BEARING BUSHING	1	2	S6
6K	1/4" STEEL PLATE TO FIT	COLUMN TOP CAP	1	1	S6
5G	1/8" NPT GREASE NIPPLE	GREASE NIPPLE	1	2	S6
3C	(2) EA. 7/8" NUT	COLUMN ANCHOR BOLT		52	S3
3C	(2) EA. 7/8" MF LOCK NUT	COLUMN ANCHOR BOLT		52	S3
3C	1"x7/8"ø BOLD	COLUMN ANCHOR BOLT		40	S3

GRILL AND GATE NOTES:

1. FABRICATION SHALL BE IN ACCORDANCE WITH REQUIREMENTS AND TOLERANCES AS SPECIFIED IN AMERICAN INSTITUTE OF STEEL CONSTRUCTION (AISC). LATEST REVISION
2. WELDING SHALL BE IN ACCORDANCE WITH AMERICAN WELDING SOCIETY D1.1 LATEST REVISION
3. ALL PIPES SHALL CONFORM TO ASTM A-53 LATEST REVISION
4. ALL TUBULAR STEEL SHAPES SHALL CONFORM TO ASTM A-500 LATEST REVISION
5. ALL STEEL ROLLED SHAPES, PLATES AND RODS SHALL CONFORM TO ASTM A-36 LATEST REVISION
6. ALL STEEL BOLTS SHALL CONFORM TO ASTM A-307 LATEST REVISION
7. ALL EMBEDDED BOLTS SHALL BE GALVANIZED IN ACCORDANCE TO ASTM A-153
8. FABRICATOR SHALL SUBMIT COMPLETE INFORMATION ON PROPOSED COATING SYSTEM TO PNM FOR APPROVAL
9. ALL FINISHED STEEL COMPONENTS, ASSEMBLIES AND SUBASSEMBLIES SHALL BE DELIVERED WITH SHOP APPLIED EPOXY PRIMER
10. PRIMER SHALL BE APPLIED PER MANUFACTURES SPECIFICATIONS
11. TOP COAT COMPATIBLE WITH PRIMER SHALL BE APPLIED BY OTHERS
12. ALL SMALL LOOSE BOLTS, NUTS, WASHERS, RODS, AND MISCELLANEOUS ITEMS SHALL BE PACKAGED IN A WATER PROOF CONTAINER AND LABELED AS TO ITS CONTENTS
13. ALL MINOR STEEL COMPONENTS SHALL BE LABELED WITH APPROPRIATE ITEM NUMBER

GATE STOP NOTES:

1. PROPER ELEVATION SHALL HAVE 5/8" - 3/4" GAP BETWEEN GATE STOP LATCH AND THE TOP OF THE SWING GRILL FRAME.

NOTE:
SEE USS-2150S2 FOR WALL DETAILS.

REVISION		
NO.	DATE	BY

PROPRIETARY STATEMENT

THIS DOCUMENT AND ALL PREVIOUS ISSUES ARE THE PROPERTY OF PUBLIC SERVICE COMPANY OF NEW MEXICO ("PNM") AND NEITHER RECEIPT NOR POSSESSION THEREOF INFERS OR TRANSFERS: ANY RIGHT IN OR LICENSE TO USE THIS DOCUMENT THE SUBJECT MATTER THEREOF OR ANY DESIGN OR TECHNICAL INFORMATION SHOWN THEREON OR ANY RIGHT TO REPRODUCE. THIS DOCUMENT OR ANY PART THEREOF. NEITHER THIS DOCUMENT NOR ANY INFORMATION CONTAINED THEREIN MAY BE COPIED, REPRODUCED, OR OTHERWISE USED OR DISCLOSED TO ANY OTHER PARTY WITHOUT FIRST OBTAINING THE EXPRESS WRITTEN PERMISSION OF PNM. THIS DOCUMENT IS PROVIDED UNDER THE EXPRESS CONDITION THAT IT WILL BE HELD IN CONFIDENCE BY THE RECIPIENT, THAT IT IS SUBJECT TO RETURN UPON DEMAND, AND THAT IT WILL NOT BE USED IN ANY WAY DETRIMENTAL TO PNM.

PNM PUBLIC SERVICE COMPANY OF NEW MEXICO

TOP AND FRONT VIEWS
SWING GRILL ASSEMBLY
STANDARD INSTALLATION DETAILS

DR: JLS	TR:	DATE: 09/08/2020
CKD:	OK:	SCALE: AS NOTED
APP:	ACAD FILE: USS2160S1	USS-2160S1
REV. NO.		

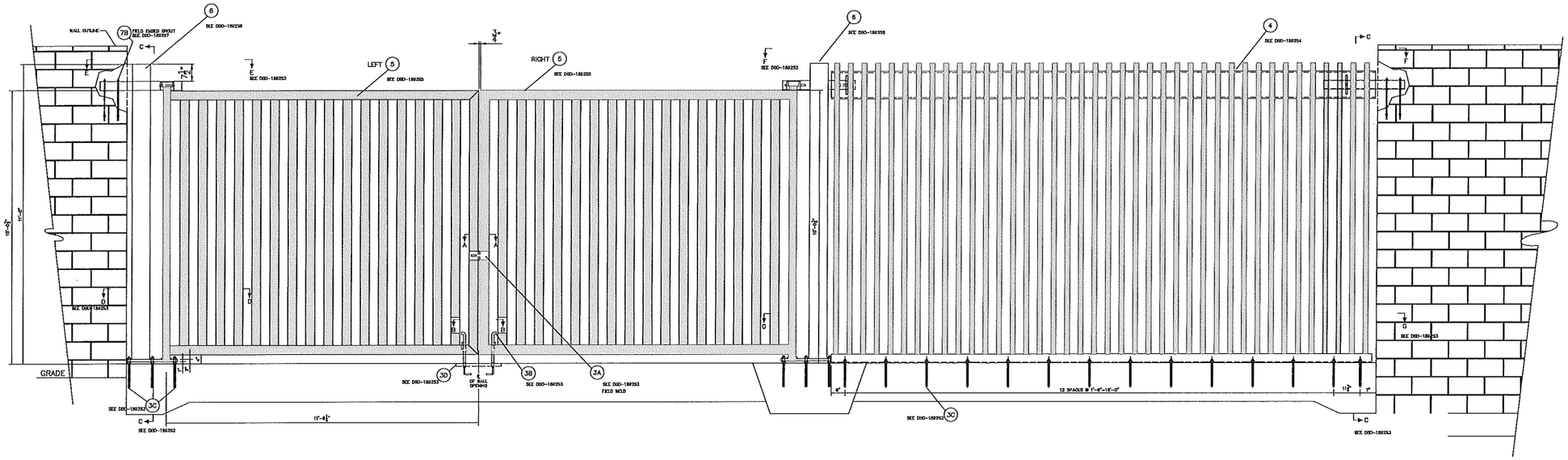

CONVERSION GRILL & SWING GATE ASSY
SCALE: 1/2" = 1'-0"
NOTE:
SEE DETAIL "A-A" DXD-189253 FOR DIFFERENCES IN DESIGN FOR LEFT & RIGHT GATES.

REVISION		
NO.	DATE	BY

PROPRIETARY STATEMENT

THIS DOCUMENT AND ALL PREVIOUS ISSUES ARE THE PROPERTY OF PUBLIC SERVICE COMPANY OF NEW MEXICO ("PNM") AND NEITHER RECEIPT NOR POSSESSION THEREOF INFERS OR TRANSFERS: ANY RIGHT IN OR LICENSE TO USE THIS DOCUMENT THE SUBJECT MATTER THEREOF OR ANY DESIGN OR TECHNICAL INFORMATION SHOWN THEREON OR ANY RIGHT TO REPRODUCE THIS DOCUMENT OR ANY PART THEREOF. NEITHER THIS DOCUMENT NOR ANY INFORMATION CONTAINED THEREIN MAY BE COPIED, REPRODUCED, OR OTHERWISE USED OR DISCLOSED TO ANY OTHER PARTY WITHOUT FIRST OBTAINING THE EXPRESS WRITTEN PERMISSION OF PNM. THIS DOCUMENT IS PROVIDED UNDER THE EXPRESS CONDITION THAT IT WILL BE HELD IN CONFIDENCE BY THE RECIPIENT, THAT IT IS SUBJECT TO RETURN UPON DEMAND, AND THAT IT WILL NOT BE USED IN ANY WAY DETRIMENTAL TO PNM.

PNM PUBLIC SERVICE COMPANY OF NEW MEXICO

FRONT VIEW
CONVERSION GRILL & SWING GATE ASSEM.
STANDARD INSTALLATION DETAILS

DR: JLS	TR:	DATE: 09/08/2020
CKD:	OK:	SCALE: AS NOTED
APP:	ACAD FILE: USS2160S2	USS-2160S2
REV. NO.		

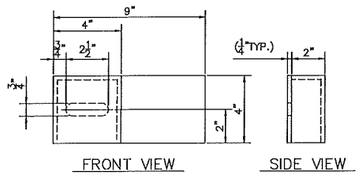

LOCK BOX PLATE (3A)
SCALE: 3" = 1'-0"
FIELD WELDED

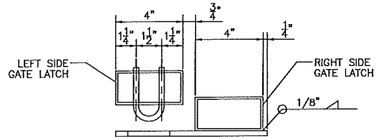

SECTION A-A
SCALE: 3" = 1'-0"
SEE SHT. DBD-1892S2

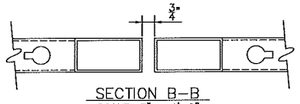

SECTION B-B
SCALE: 3" = 1'-0"
SEE SHT. DBD-1892S2

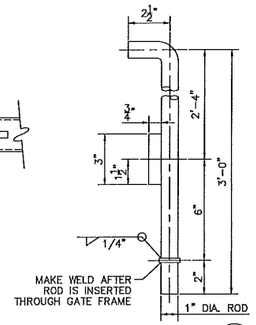

STOP ROD (3B)

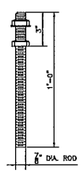

COLUMN EPOXY THREADDED ANCHOR BOLT (3C)
MIN. 8" EMBED

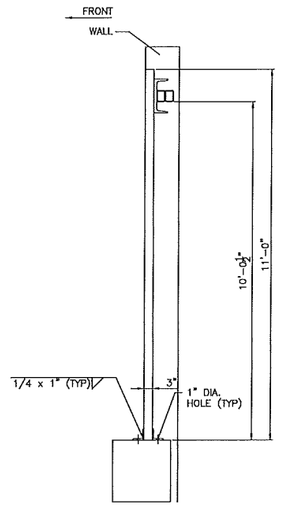

SECTION C-C
SCALE: 1/2" = 1'-0"
SEE SHT. DBD-1892S2

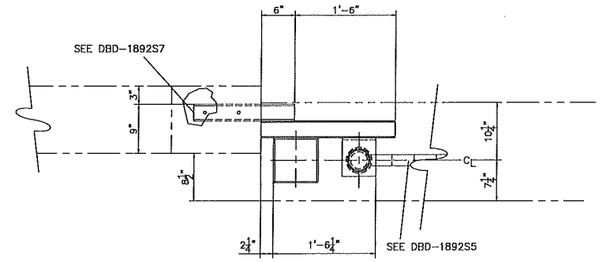

SECTION E-E
SCALE: 1" = 1'-0"
SEE DBD-1892S2

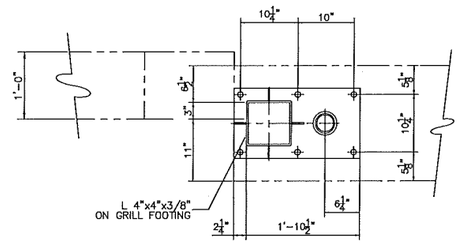

SECTION D-D
SCALE: 1" = 1'-0"
SEE DBD-1892S2

BILL OF MATERIALS					
ITEM #	ASSEMBLED ITEM MATERIALS	PIECE DESCRIPTION	QTY.	ITEM EXT. QTY.	SHEET #
	SWING GATE & COLUMN ASSEMBLY:				
3A	1/4" STEEL PLATE	LOCK PLATE (LOCK ASSEMBLY)	1	1	S3
3B	3'x1"ø ROD WITH WELDED TAB AND COLLAR	STOP ROD	1	2	S3
3C	7/8" NUT	COLUMN ANCHOR BOLT	–	52	S3
3C	7/8" FLAT WASHER	COLUMN ANCHOR BOLT	–	52	S3
3C	1'x7/8"ø BOLT	COLUMN ANCHOR BOLT	–	40	S3

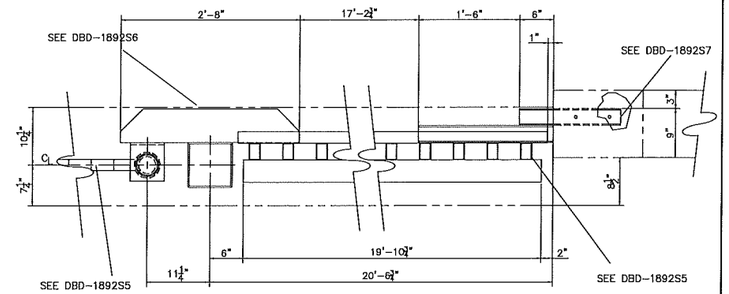

SECTION F-F
SCALE: 1" = 1'-0"
SEE DBD-1892S2

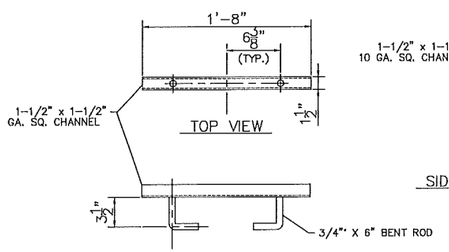

GATE STOP ASSEMBLY (CLOSED) (3D)
SCALE: 1-1/2" = 1'-0"

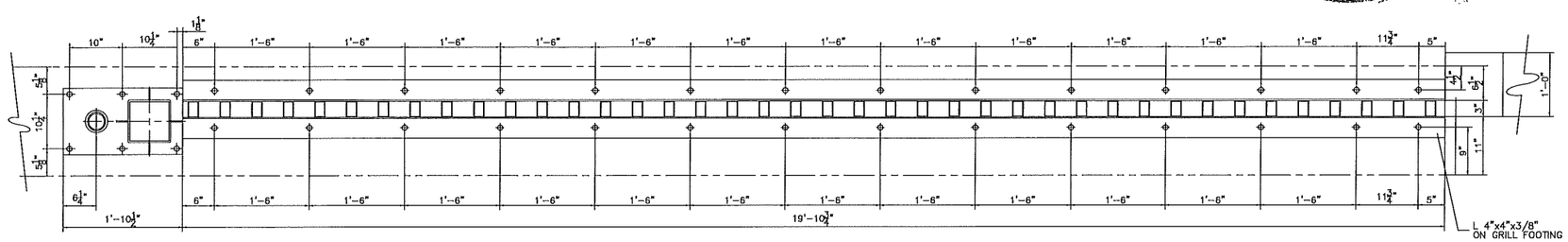

SECTION G-G
SCALE: 1" = 1'-0"
SEE DBD-1892S2

CHRISTOPHER M. BUDD
NEW MEXICO
0917
REGISTERED PROFESSIONAL ENGINEER

REVISION		
NO.	DATE	BY

PROPRIETARY STATEMENT

THIS DOCUMENT AND ALL PREVIOUS ISSUES ARE THE PROPERTY OF PUBLIC SERVICE COMPANY OF NEW MEXICO ("PNM") AND NEITHER RECEIPT NOR POSSESSION THEREOF INFERS OR TRANSFERS: ANY RIGHT IN OR LICENSE TO USE THIS DOCUMENT THE SUBJECT MATTER THEREOF OR ANY DESIGN OR TECHNICAL INFORMATION SHOWN THEREON OR ANY RIGHT TO REPRODUCE THIS DOCUMENT OR ANY PART THEREOF. NEITHER THIS DOCUMENT NOR ANY INFORMATION CONTAINED THEREIN MAY BE COPIED, REPRODUCED, OR OTHERWISE USED OR DISCLOSED TO ANY OTHER PARTY WITHOUT FIRST OBTAINING THE EXPRESS WRITTEN PERMISSION OF PNM. THIS DOCUMENT IS PROVIDED UNDER THE EXPRESS CONDITION THAT IT WILL BE HELD IN CONFIDENCE BY THE RECIPIENT, THAT IT IS SUBJECT TO RETURN UPON DEMAND, AND THAT IT WILL NOT BE USED IN ANY WAY DETRIMENTAL TO PNM.

PNM PUBLIC SERVICE COMPANY OF NEW MEXICO

SECTION VIEWS
SWING GRILL
STANDARD INSTALLATION DETAILS

DR: JLS	TR:	DATE: 09/08/2020
CKD:	OK:	SCALE: AS NOTED
APP:	ACAD FILE: USS2160S3	USS-2160S3
REV. NO.		

BILL OF MATERIALS					
ITEM #	ASSEMBLED ITEM MATERIALS	PIECE DESCRIPTION	QTY.	ITEM EXT. QTY.	SHEET #
	WING GRILL ASSEMBLY:		1	1	S4
4A	2"x3" 14 GA. STEEL TUBE	WING GRILL RIB		40	S4
4B	12"x3"x3/8" CHANNEL	ADJUSTABLE CHANNEL		1	S4
4C	4"X4"X3/8" ANGLE	BASE ANGLE		2	S4

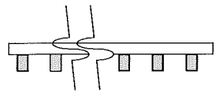

TOP VIEW (GRILL ASSY)

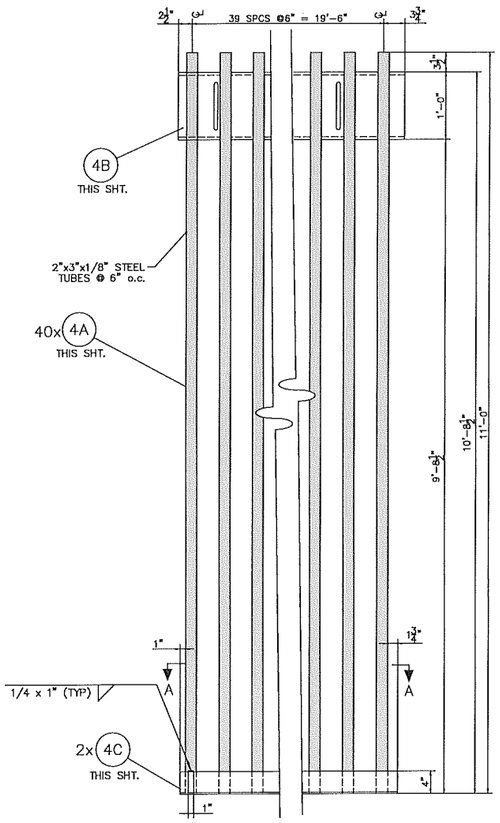

WING GRILL ASSY 4
SCALE: 1" = 1'-0"

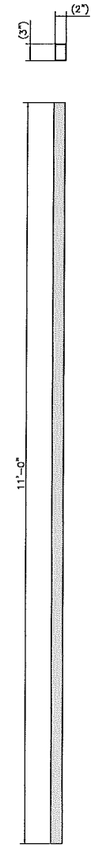

WING GRILL RIB 4A
1" = 1'-0"

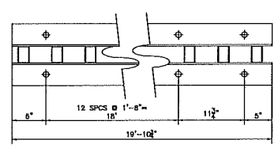

SECTION A--A
SCALE: 1" = 1'-0"

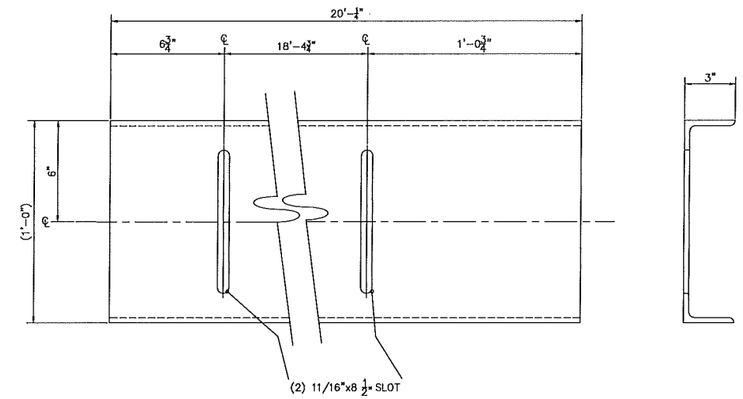

ADJUSTABLE CHANNEL 4B
C12 X 20.7 CHANNEL
SCALE: 3" = 1'-0"

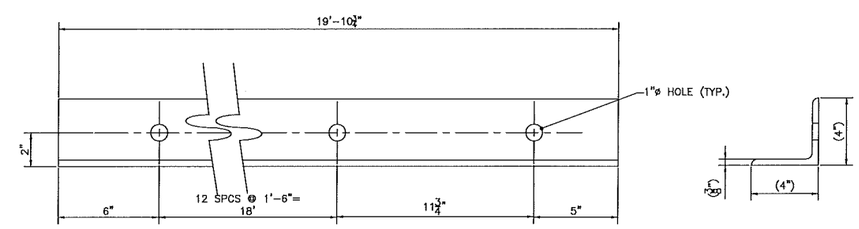

BASE ANGLE 4C
4x4x3/8" ANGLE
SCALE: 3" = 1'-0"

REVISION		
NO.	DATE	BY

PROPRIETARY STATEMENT

THIS DOCUMENT AND ALL PREVIOUS ISSUES ARE THE PROPERTY OF PUBLIC SERVICE COMPANY OF NEW MEXICO ("PNM") AND NEITHER RECEIPT NOR POSSESSION THEREOF INFERS OR TRANSFERS: ANY RIGHT IN OR LICENSE TO USE THIS DOCUMENT THE SUBJECT MATTER THEREOF OR ANY DESIGN OR TECHNICAL INFORMATION SHOWN THEREON OR ANY RIGHT TO REPRODUCE THIS DOCUMENT OR ANY PART THEREOF. NEITHER THIS DOCUMENT NOR ANY INFORMATION CONTAINED THEREIN MAY BE COPIED, REPRODUCED, OR OTHERWISE USED OR DISCLOSED TO ANY OTHER PARTY WITHOUT FIRST OBTAINING THE EXPRESS WRITTEN PERMISSION OF PNM. THIS DOCUMENT IS PROVIDED UNDER THE EXPRESS CONDITION THAT IT WILL BE HELD IN CONFIDENCE BY THE RECIPIENT, THAT IT IS SUBJECT TO RETURN UPON DEMAND, AND THAT IT WILL NOT BE USED IN ANY WAY DETRIMENTAL TO PNM.

PNM PUBLIC SERVICE COMPANY OF NEW MEXICO

SECTION AND DETAIL VIEWS
SWING GRILL ASSEMBLY & PIECE PARTS
STANDARD INSTALLATION DETAILS

DR: JLS	TR:	DATE: 09/08/2020
CKD:	OK:	SCALE: AS NOTED
APP:	ACAD FILE: USS2160S4	USS-2160S4
REV. NO.		

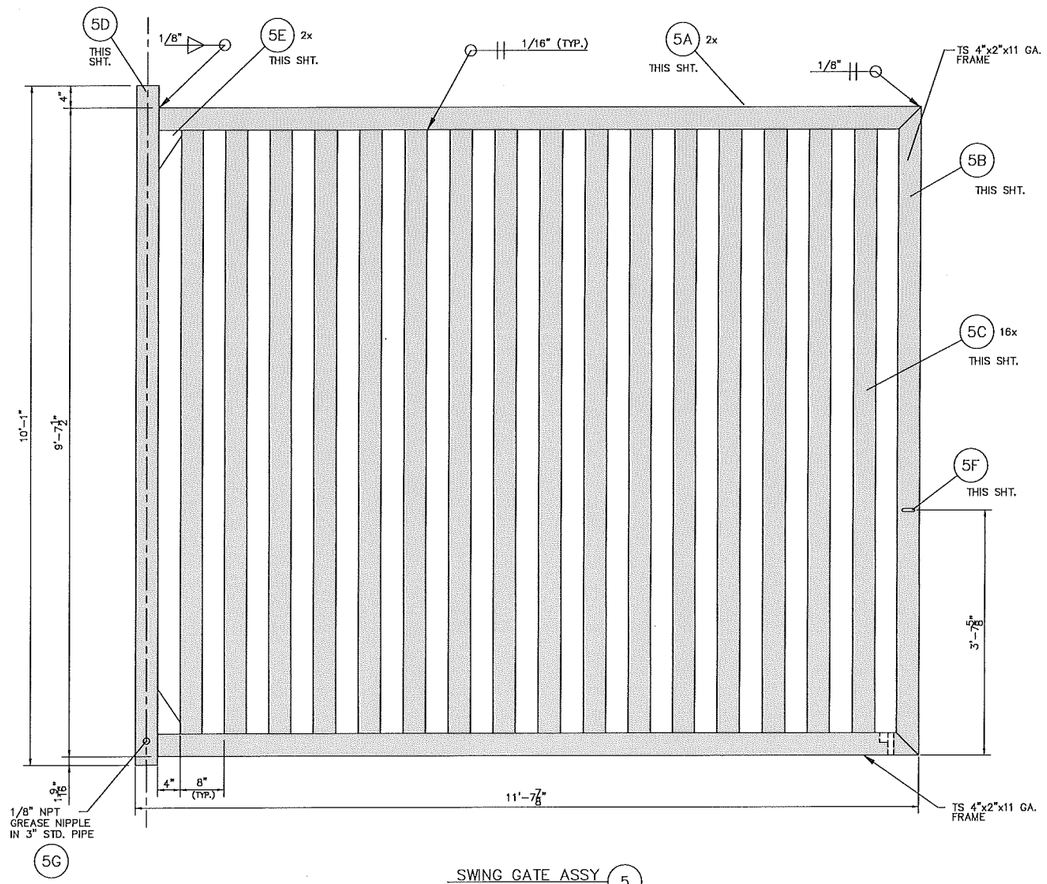

SWING GATE ASSY (5)
SCALE: 1" = 1"- 0"

BILL OF MATERIALS

ITEM #	ASSEMBLED ITEM MATERIALS	PIECE DESCRIPTION	QTY.	ITEM EXT. QTY.	SHEET #
	SWING GATE ASSEMBLY:		1	2	S5
5A	TS 4"x2"x11 GA.	HORIZONTAL FRAME TUBING	2	4	S5
5B	TS 4"x2"x11 GA	VERTICAL FRAME TUBING	1	2	S5
5C	TS 4"x2"x11 GA	VERTICAL RIB	16	32	S5
5D	ID Ø 3.548, 3 1/2" STD. WEIGHT PIPE	HINGE PIPE	1	2	S5
5E	1/4" STEEL PLATE	GUSSET	1	2	S5
5F	3"x1-1/2", 5/16" U-BOLT	U-BOLT (LOCK ASSEMBLY)	1	1	S5
5G	1/8" NPT GREASE NIPPLE	GREASE NIPPLE	1	2	S5

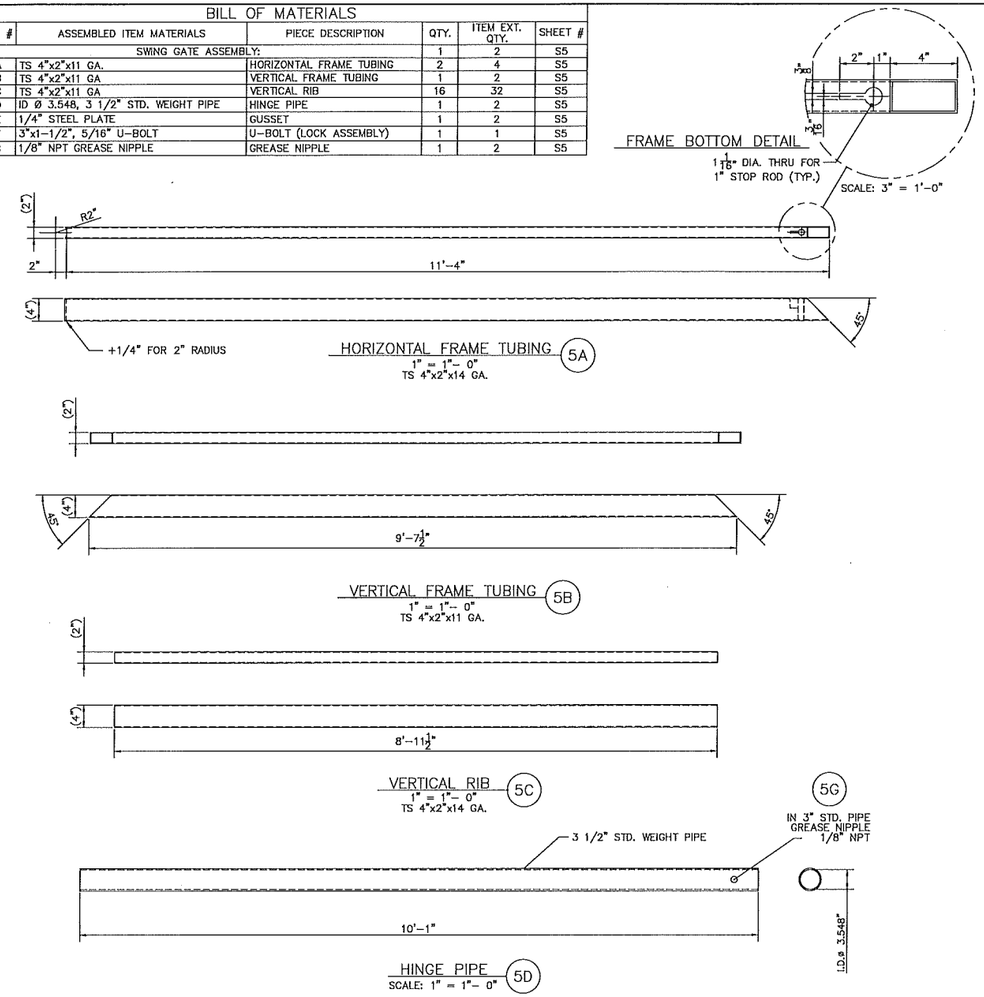

REVISION

NO.	DATE	BY

PROPRIETARY STATEMENT

THIS DOCUMENT AND ALL PREVIOUS ISSUES ARE THE PROPERTY OF PUBLIC SERVICE COMPANY OF NEW MEXICO ("PNM") AND NEITHER RECEIPT NOR POSSESSION THEREOF INFERS OR TRANSFERS: ANY RIGHT IN OR LICENSE TO USE THIS DOCUMENT THE SUBJECT MATTER THEREOF OR ANY DESIGN OR TECHNICAL INFORMATION SHOWN THEREON OR ANY RIGHT TO REPRODUCE THIS DOCUMENT OR ANY PART THEREOF. NEITHER THIS DOCUMENT NOR ANY INFORMATION CONTAINED THEREIN MAY BE COPIED, REPRODUCED, OR OTHERWISE USED OR DISCLOSED TO ANY OTHER PARTY WITHOUT FIRST OBTAINING THE EXPRESS WRITTEN PERMISSION OF PNM. THIS DOCUMENT IS PROVIDED UNDER THE EXPRESS CONDITION THAT IT WILL BE HELD IN CONFIDENCE BY THE RECIPIENT, THAT IT IS SUBJECT TO RETURN UPON DEMAND, AND THAT IT WILL NOT BE USED IN ANY WAY DETRIMENTAL TO PNM.

PNM PUBLIC SERVICE COMPANY OF NEW MEXICO

ELEVATION VIEW & DETAILS
SWING GATE ASSEMBLY & PIECE PARTS
STANDARD INSTALLATION & DETAILS

DR: JLS	TR:	DATE: 09/08/2020
CKD:	OK:	SCALE: AS NOTED
APP:	ACAD FILE: USS2160S5	USS-2160S5
REV. NO.		

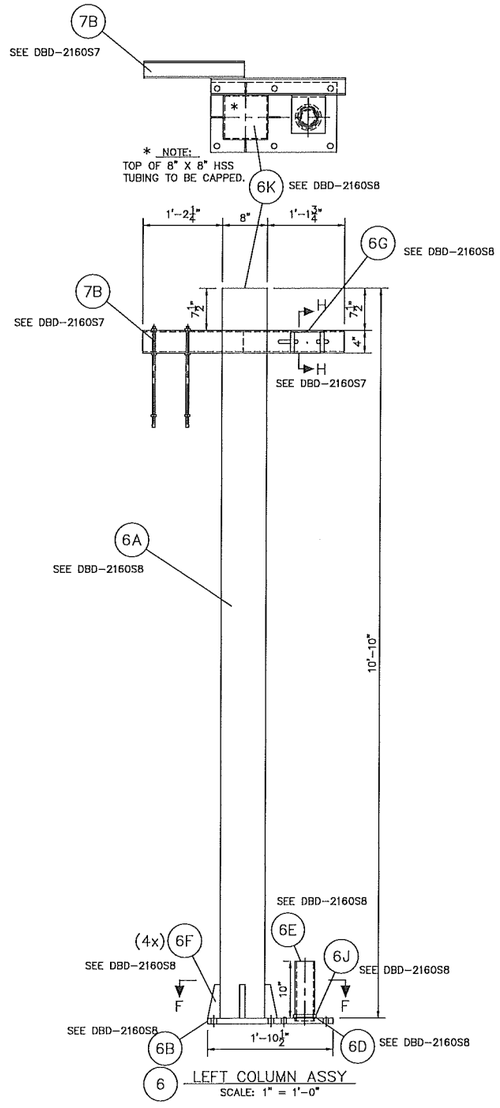

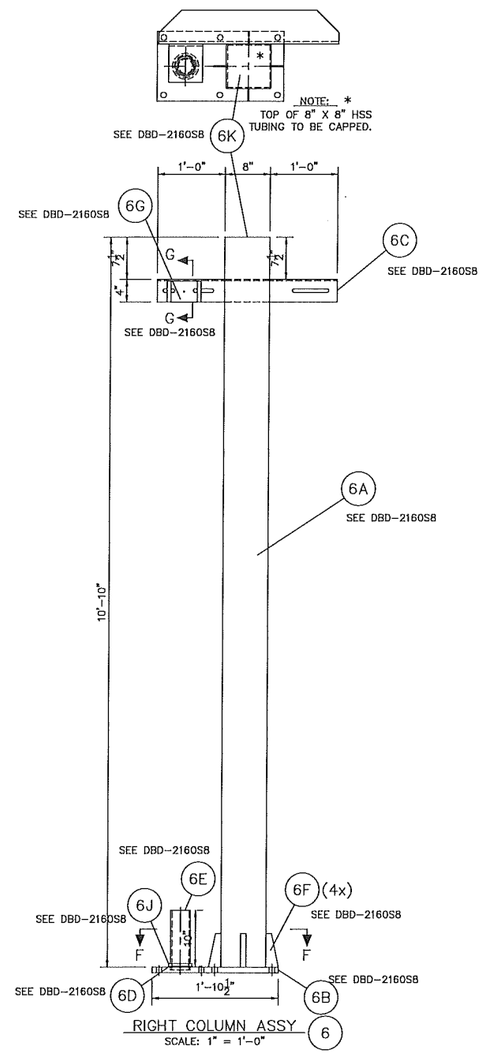

REVISION		
NO.	DATE	BY

PROPRIETARY STATEMENT

THIS DOCUMENT AND ALL PREVIOUS ISSUES ARE THE PROPERTY OF PUBLIC SERVICE COMPANY OF NEW MEXICO ("PNM") AND NEITHER RECEIPT NOR POSSESSION THEREOF INFERS OR TRANSFERS: ANY RIGHT IN OR LICENSE TO USE THIS DOCUMENT THE SUBJECT MATTER THEREOF OR ANY DESIGN OR TECHNICAL INFORMATION SHOWN THEREON OR ANY RIGHT TO REPRODUCE THIS DOCUMENT OR ANY PART THEREOF. NEITHER THIS DOCUMENT NOR ANY INFORMATION CONTAINED THEREIN MAY BE COPIED, REPRODUCED, OR OTHERWISE USED OR DISCLOSED TO ANY OTHER PARTY WITHOUT FIRST OBTAINING THE EXPRESS WRITTEN PERMISSION OF PNM. THIS DOCUMENT IS PROVIDED UNDER THE EXPRESS CONDITION THAT IT WILL BE HELD IN CONFIDENCE BY THE RECIPIENT, THAT IT IS SUBJECT TO RETURN UPON DEMAND, AND THAT IT WILL NOT BE USED IN ANY WAY DETRIMENTAL TO PNM.

PNM PUBLIC SERVICE COMPANY OF NEW MEXICO

PLAN & SECTION VIEWS
COLUMN ASSEMBLY & PIECE PARTS
STANDARD INSTALLATION DETAILS

DR: JLS	TR:	DATE: 09/08/2020
CKD:	OK:	SCALE: AS NOTED
APP:	ACAD FILE: USS2160S6	USS-2160S6
REV. NO.		

ITEM #	ASSEMBLED ITEM MATERIALS	PIECE DESCRIPTION	QTY.	ITEM EXT. QTY.	SHEET #
	GATE STOP ASSEMBLY:				
7D	2"x2" SQUARE STEEL POST	SQUARE POST	1	2	S7
7E	1/4" PLATE	GATE STOP	1	2	S7
7F	1/4" STEEL POST	GATE STOP WEIGHT	1	2	S7
7G	3/4" STEEL ROD	STOP	1	2	S7
7H	1"x3-1/2" BOLT W/ NUT AND WASHER	GATE STOP BOLT	1	2	S7

ITEM #	ASSEMBLED ITEM MATERIALS	PIECE DESCRIPTION	QTY.	ITEM EXT. QTY.	SHEET #
	TUBULAR EMBED ASSEMBLY:				
7A	TUBULAR EMBED ASSEMBLY	TUBE	1	2	S7
7B	TUBULAR EMBED ASSEMBLY	EMBED TUBE	1	2	S7
7C	TUBULAR EMBED ASSEMBLY	EMBED ANCHOR BOLT	2	4	S7
	5/8" X 4" GALV. HEX BOLT W/ NUT, 2 FLAT WASHERS & 1 LOCK WASHER		1	2	S7

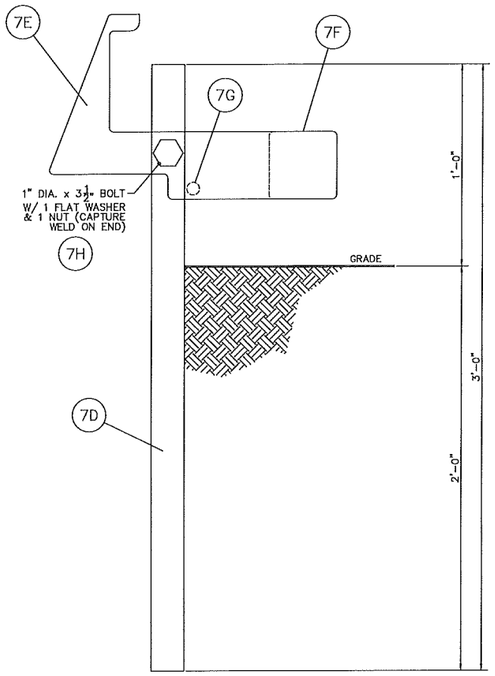

GATE STOP ASS'Y (7)
GATE STOP PAINTED ANSI YELLOW
SCALE: 3" = 1'-0"

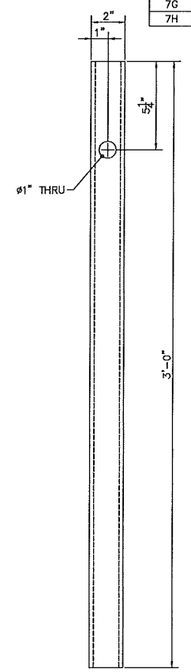

GATE STOP SQUARE POST (7D)
SCALE: 3" = 1'-0"

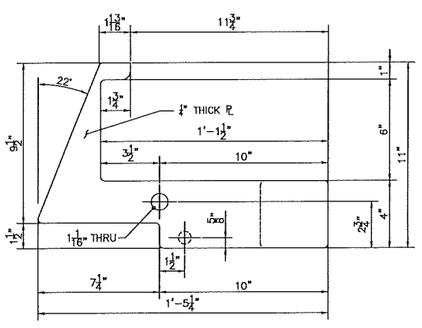

GATE STOP (7E)
NOTE: ALL FILLETS & ROUNDS TO BE 1/2"
SCALE: 3" = 1'-0"

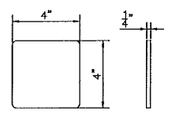

GATE STOP WEIGHT (7F)
NOTE: ALL RADII TO BE 1/4"
SCALE: 3" = 1'-0"

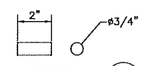

STOP (7G)
SCALE: 3" = 1'-0"

GATE STOP ASSEMBLY (OPEN)

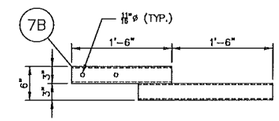

TOP VIEW TUBULAR EMBED ASSY
SCALE: 1" = 1'-0"

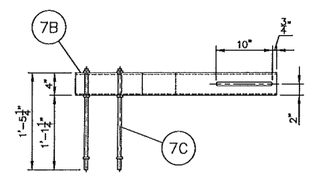

FRONT VIEW TUBULAR EMBED ASSY
SCALE: 1" = 1'-0"

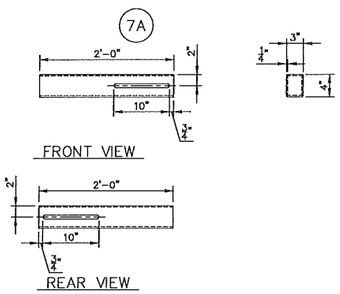

TUBE
SCALE: 1" = 1'-0"

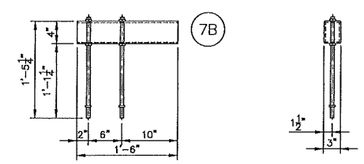

EMBED TUBE
SCALE: 1" = 1'-0"

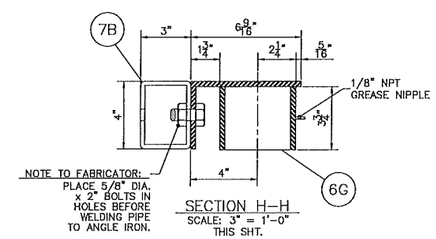

SECTION H-H
SCALE: 3" = 1'-0"
THIS SHT.

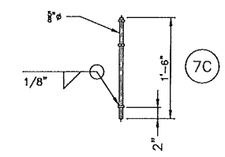

EMBED ANCHOR BOLT
SCALE: 1" = 1'-0"

TUBULAR EMBED ASSEMBLY

CHRISTOPHER M. BADA
NEW MEXICO
0917
REGISTERED PROFESSIONAL ENGINEER

REVISION		
NO.	DATE	BY

PROPRIETARY STATEMENT

THIS DOCUMENT AND ALL PREVIOUS ISSUES ARE THE PROPERTY OF PUBLIC SERVICE COMPANY OF NEW MEXICO ("PNM") AND NEITHER RECEIPT NOR POSSESSION THEREOF, REFERS OR TRANSFERS: ANY RIGHT IN OR LICENSE TO USE THIS DOCUMENT THE SUBJECT MATTER THEREOF OR ANY DESIGN OR TECHNICAL INFORMATION SHOWN THEREON OR ANY RIGHT TO REPRODUCE THIS DOCUMENT OR ANY PART THEREOF. NEITHER THIS DOCUMENT NOR ANY INFORMATION CONTAINED THEREIN MAY BE COPIED, REPRODUCED, OR OTHERWISE USED OR DISCLOSED TO ANY OTHER PARTY WITHOUT FIRST OBTAINING THE EXPRESS WRITTEN PERMISSION OF PNM. THIS DOCUMENT IS PROVIDED UNDER THE EXPRESS CONDITION THAT IT WILL BE HELD IN CONFIDENCE BY THE RECIPIENT, THAT IT IS SUBJECT TO RETURN UPON DEMAND, AND THAT IT WILL NOT BE USED IN ANY WAY DETRIMENTAL TO PNM.

PNM PUBLIC SERVICE COMPANY OF NEW MEXICO

PLAN & SECTION VIEWS
GATE STOP & TUBULAR EMBED
STANDARD INSTALLATION DETAILS

DR: JLS	TR:	DATE: 09/08/2020	
CKD:	OK:	SCALE: AS NOTED	
APP:	ACAD FILE: USS2160S7	USS-2160S7	
REV. NO.			

BILL OF MATERIALS					
COLUMN ASSEMBLY:			1	2	S6
6A	8"x8"3/8" HSS	COLUMN SQUARE TUBING	1	2	S6
6B	1"xA36	COLUMN BASE PLATE	1	2	S6
6C	L 6"x4"x5/16"	HINGE ADJUSTER		1	S6
6D	IDø 3.348, 3-1/2" STD. WEIGHT PIPE	HINGE REST	1	2	S6
6E	ODø 3.5", 3" STD. WEIGHT PIPE	LOWER HINGE PIPE	1	2	S6
6F	1" STEEL PIPE	WEB	4	8	S6
6G	ODø 4.5", 4" STD. WEIGHT PIPE	HINGE	1	2	S6
6G	L 6"x4"x5/16" ANGLE	HINGE	1	2	S6
6G	5/8"X2" GALV. BOLT	HINGE	1	2	S6
6G	5/8" GALV. NUT	HINGE	1	2	S6
6G	5/8" GALV. LOCKWASHER	HINGE	1	2	S6
6G	5/8" GALV. FLATWASHER	HINGE	2	4	S6
6J	1/2" BRASS PLATE	BRASS BEARING BUSHING	1	2	S6
6K	1/4" STEEL PLATE TO FIT	COLUMN TOP CAP	1	1	S6

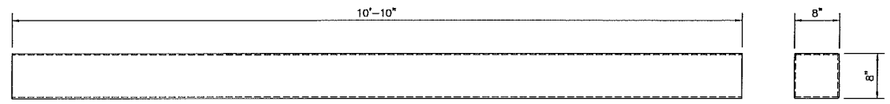

COLUMN SQUARE TUBING (6A)
8"x8"x3/8" HSS
SCALE: 1" = 1'-0"

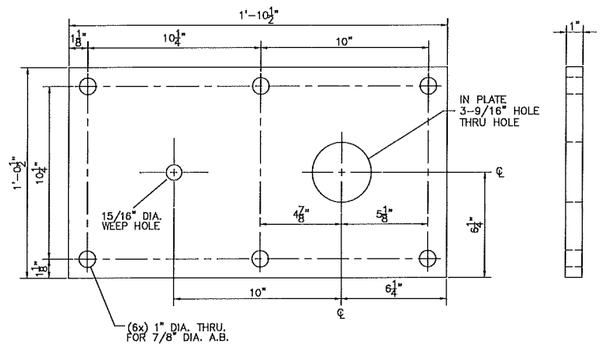

COLUMN BASE PLATE (6B)
SCALE: 3" = 1'-0"
1" THICK A36

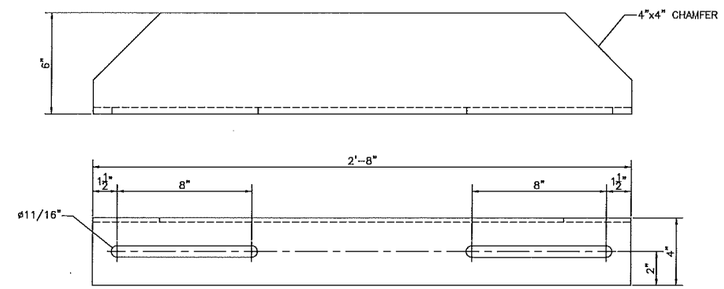

HINGE ADJUSTER (6C)
SCALE: 3" = 1'-0"
L 6"x4"x3/8"

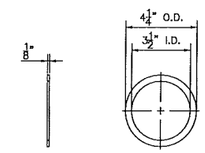

HINGE REST (6D)
SCALE: 3" = 1'-0"

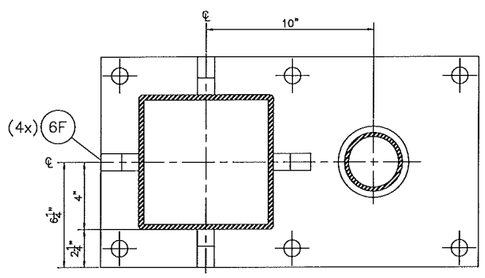

SECTION F-F
SCALE: 3" = 1'-0"

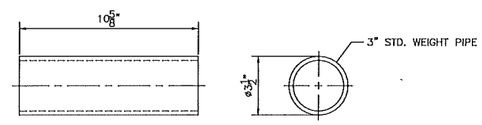

LOWER HINGE PIPE (6E)
SCALE: 3" = 1'-0"

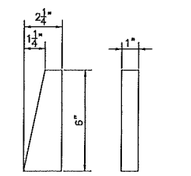

WEB (6F)
SCALE: 3" = 1'-0"

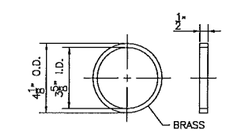

BRASS BEARING BUSHING (6J)
SCALE: 3" = 1'-0"

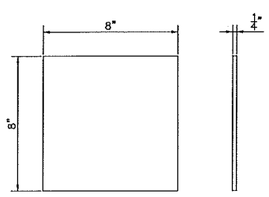

TOP CAP (6K)
SCALE: 3" = 1'-0"
1/4" THICK

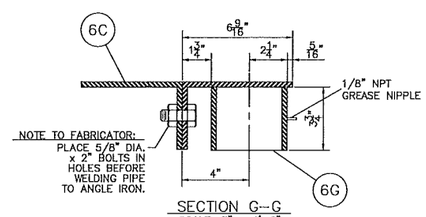

SECTION G-G
SCALE: 3" = 1'-0"
THIS SHT.

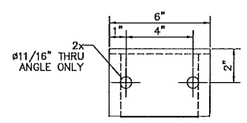

BACK VIEW (HINGE)

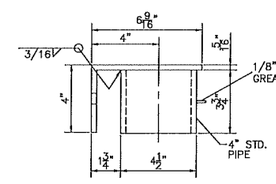

SIDE VIEW (HINGE) (6G)
SCALE: 3" = 1'-0"

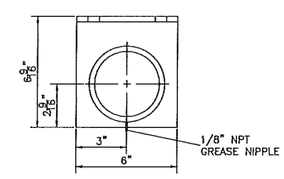

BOTTOM VIEW (HINGE)

REVISION		
NO.	DATE	BY

PROPRIETARY STATEMENT

THIS DOCUMENT AND ALL PREVIOUS ISSUES ARE THE PROPERTY OF PUBLIC SERVICE COMPANY OF NEW MEXICO ("PNM") AND NEITHER RECEIPT NOR POSSESSION THEREOF OFFERS OR TRANSFERS: ANY RIGHT IN OR LICENSE TO USE THIS DOCUMENT THE SUBJECT MATTER THEREOF OR ANY DESIGN OR TECHNICAL INFORMATION SHOWN THEREON OR ANY RIGHT TO REPRODUCE THIS DOCUMENT OR ANY PART THEREOF. NEITHER THIS DOCUMENT NOR ANY INFORMATION CONTAINED THEREIN MAY BE COPIED, REPRODUCED, OR OTHERWISE USED OR DISCLOSED TO ANY OTHER PARTY WITHOUT FIRST OBTAINING THE EXPRESS WRITTEN PERMISSION OF PNM. THIS DOCUMENT IS PROVIDED UNDER THE EXPRESS CONDITION THAT IT WILL BE HELD IN CONFIDENCE BY THE RECIPIENT, THAT IT IS SUBJECT TO RETURN UPON DEMAND, AND THAT IT WILL NOT BE USED IN ANY WAY DETRIMENTAL TO PNM.

PNM PUBLIC SERVICE COMPANY OF NEW MEXICO

PLAN & SECTION VIEWS
COLUMN ASSEMBLY PIECE PARTS
STANDARD INSTALLATION DETAILS

DR: JLS	TR:	DATE: 09/08/2020
CKD:	OK:	SCALE: AS NOTED
APP:	ACAD FILE: USS2160S8	USS-2160S8
REV. NO.		

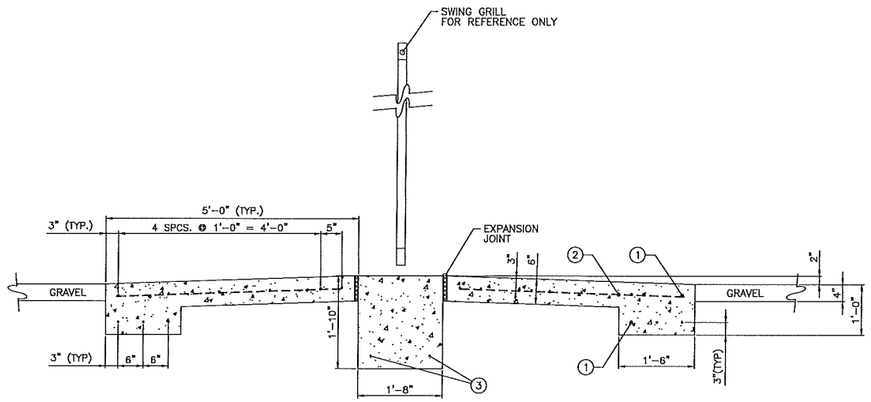

SECTION A–A
SCALE: 3/4" = 1'-0"

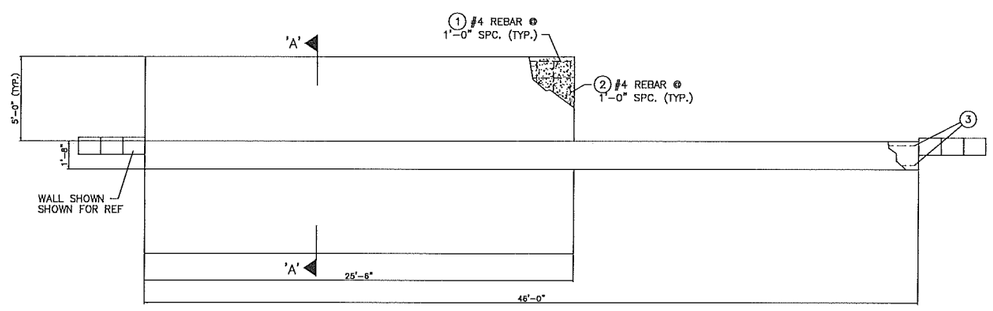

APRON TOP VIEW
SCALE: 1/4" = 1'-0"

REBAR SCHEDULE				
APRON:				
ITEM	QTY.	SIZE	LENGTH	SHAPE
1	18	#4 GRADE 60	25'	STRAIGHT
2	52	#4 GRADE 60	4'-6"	STRAIGHT
SWING GRILL:				
3	2	#4 GRADE 60	45'-6"	STRAIGHT

NOTE:

1. ALL REBAR TO BE GRADE 60
2. STRENGTH OF CONCRETE @ 28 DAYS TO BE 4000 PSI.
3. APRON TO BE SCORED AT CENTER
4. APRON TO BE SLOPED @ 1":30"

CONCRETE SCHEDULE		
ITEM	QTY.	DESCRIPTION
APRON	7 CU. YDS. BOTH SIDES	4000 PSI AT 28 DAYS PER PNM SPECIFICATIONS
SWING GRILL FOUNDATION	5.3	4000 PSI AT 28 DAYS PER PNM SPECIFICATIONS

NOTE:

1. ALL REBAR TO BE GRADE 60
2. STRENGTH OF CONCRETE @ 28 DAYS TO BE 4000 PSI.

REVISION		
NO.	DATE	BY

PROPRIETARY STATEMENT

THIS DOCUMENT AND ALL PREVIOUS ISSUES ARE THE PROPERTY OF PUBLIC SERVICE COMPANY OF NEW MEXICO ("PNM") AND NEITHER RECEIPT NOR POSSESSION THEREOF INFERS OR TRANSFERS: ANY RIGHT IN OR LICENSE TO USE THIS DOCUMENT THE SUBJECT MATTER THEREOF OR ANY DESIGN OR TECHNICAL INFORMATION SHOWN THEREON OR ANY RIGHT TO REPRODUCE THIS DOCUMENT OR ANY PART THEREOF. NEITHER THIS DOCUMENT NOR ANY INFORMATION CONTAINED THEREIN MAY BE COPIED, REPRODUCED, OR OTHERWISE USED OR DISCLOSED TO ANY OTHER PARTY WITHOUT FIRST OBTAINING THE EXPRESS WRITTEN PERMISSION OF PNM. THIS DOCUMENT IS PROVIDED UNDER THE EXPRESS CONDITION THAT IT WILL BE HELD IN CONFIDENCE BY THE RECIPIENT, THAT IT IS SUBJECT TO RETURN UPON DEMAND, AND THAT IT WILL NOT BE USED IN ANY WAY DETRIMENTAL TO PNM.

PNM PUBLIC SERVICE COMPANY OF NEW MEXICO

TOP AND SECTION VIEWS
DRIVE APRON DETAILS & ASSEMBLY
STANDARD INSTALLATION DETAILS

DR: JLS	TR:	DATE: 09/08/2020
CKD:	OK:	SCALE: AS NOTED
APP:	ACAD FILE: USS2160S9	USS–2160S9
REV. NO.		