DEVELOPMENT REVIEW BOARD

Parks and Recreation Department

PR-2021-005195
SI-2021-01747 – SITE PLAN
DEKKER/PERICH/SABATINI – WILL GLEASON agent for JC SIX LLC requests the aforementioned action(s) for all or a portion of: TRACT 6A-1, UNIT 1, JOURNAL CENTER PHASE 2 zoned MX-H, located on 7501 JEFFERSON ST NE between JEFFERSON ST and MASTHEAD ST NE containing approximately 5.1536 acre(s). (D-17)
PROPERTY OWNERS: JC SIX LLC
REQUEST: SITE PLAN APPROVAL REQUEST FOR MULTI-FAMILY APARTMENT HOME COMMUNITY

<u>11-10-2021</u>
Jefferson St NE is a Community Principal Arterial, and Masthead St NE and Tiburon St NE are Major Collectors, requiring street trees. The legend shows Berinda Ash for Tiburon St and Masthead St. Pursuant to 5-6(C)(4)(b), trees should be selected from the Official Albuquerque Plant Palette. Ash is only Conditionally Recommended due to high water use. The Parks and Recreation Department (PRD) is a partner with the Nature Conservancy who developed a Climate Ready Tree List for Albuquerque. PRD encourages developers to use this list for street trees (see insert below).

Climate-Ready Trees for Albuquerque

LOCATION TYPE 5
STREETSCAPES

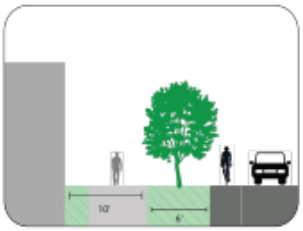

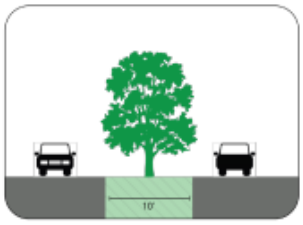

LOCATION CHARACTERISTICS

Follows "Right Tree in the Right Place"

Soil Volume: Sufficient

No Utility Conflicts

Building Setback: >10'

RECOMMENDED TREES

Arbutus xalapensis	Texas Madrone
Celtis reticulata	Netleaf Hackberry
Cercis canadensis var. *mexicana*	Mexican Redbud
Cercis reniformis	Oklahoma Redbud
Cercis canadensis var. *texensis*	Texas Redbud
Cercis occidentalis	Western Redbud
Cedrus deodara	Deodar Cedar
Chilopsis linearis	Desert Willow
Cotinus obovatus	American Smoketree
Crataegus ambigua	Russian Hawthorn
Forestiera neomexicana	New Mexico Privet
Gymnocladus dioica	Kentucky Coffeetree
Fraxinus cuspidata *	Fragrant Ash*
Lagerstroemia indica	Crape Myrtle
Leucaena retusa *	Golden-ball Lead-tree*
Maclura pomifera	Osage Orange
Parkinsonia x 'Desert Museum' *	Palo Verde hybrids*
Pistacia chinensis *	Chinese Pistache*
Prosopis glandulosa *	Honey Mesquite*
Quercus arizonica	Arizona White Oak
Quercus fusiformis	Escarpment Live Oak
Quercus gravesii	Chisos Red Oak
Quercus ilex	Holly Oak
Quercus muehlenbergii	Chinkapin Oak
Quercus oblongifolia	Blue Oak
Quercus suber *	Cork Oak*
Quercus buckleyi	Texas Red Oak
Sapindus saponaria var.drummondii *	Western Soapberry*
Sophora secundiflora *	Texas Mountain Laurel*
Rhus lanceolata	Prairie Flameleaf Sumac
Ulmus x 'Morton' *Accolade*™	Accolade Elm
Ulmus x 'Frontier'	Frontier Elm
Ulmus parvifolia *	Lacebark Elm*
Vitex agnus-castus	Chaste Tree
Zelkova serrata	Japanese Zelkova

* These species have further site specific needs outlined in Appendix A - Master List

DEVELOPMENT REVIEW BOARD

Parks and Recreation Department

Lists linked here:
Official Albuquerque Plant Palette: Official Albuquerque Plant Palette and Sizing List-2018-07-03.xlsx (cabq.gov)
CLIMATE-READY TREES FOR ALBUQUERQUE: NMFO Climate-Ready Trees Lists (nature.org)

TRAIL
The Parks and Recreation Department is looking into a multi-purpose trail in the arroyo and it may be requested as part of the infrastructure. The North Pino Arroyo Channel to the north is classified as a major arroyo and subject to 5-2(J)(3).
There is a potential for a trail connection to the North Diversions channel to the west, however, a project is not funded at this time. Is there a potential for the applicant to supply a trail with ped/bike access gate to the north of the property line? PRD would appreciate collaboration with this applicant on this.
The Site Plan shows a sidewalk connection – could this be a multi-purpose trail?

Related Citations:
IDO 5-2(J)(3)(b) Property owners shall dedicate public right-or-way as shown in the Facility Plan for Arroyos for trails and/or arroyos. Public right-of way for a trail and landscaping adjacent to an arroyo shall average 20 feet in width.

IDO 5-3(D)(4) Trails shall be dedicated on alignments that connect to any planned or existing trails on adjacent properties, as necessary to serve the residents, occupants, and users of the proposed development, and shall be constructed pursuant to the DPM.

IDO 5-3(E)(4) Bicycle Facilities along Streets Each street designated in the Metropolitan Transportation Plan and/or the Bikeways and Trails Facility Plan as an existing or proposed route to accommodate bicycles shall be incorporated into the development and shall be designed to comply with the standards of the DPM.

DPM Section 7-4(F)(2) Locations of Future Facilities 3. In locations not identified on the LRBS or the BTFP maps, bikeways and/or trails may be required if they connect or close a gap in the existing system.
12-01-2021, 12-15-2021, 01-05-2022, 05-16-2022
Please review tree list. Please discuss trail.

06-22-2022, 08-24-2022
Applicant notified the Parks & Recreation Department that AMAFCA would not permit a trail in their ROW at this time due to flood calculations.

DEVELOPMENT REVIEW BOARD

Parks and Recreation Department

09-21-2022

The applicant will grant an easement to the benefit of the Parks and Recreation Department on a portion of the property at the northeast corner for a future trail.

1. **Easement:**

   AMAFCA will not allow trail construction at this time (letter in record). The applicant agrees to a paper easement for the benefit of PRD at the northwest corner of the site, so a trail may be constructed in the future (exhibit in record). Said paper easement will be a Condition of Approval.

   Questions:

   a. Should the easement be noted on the Site Plan or Landscape Plan?
   b. The Infrastructure List still shows a 10-ft wide Asphalt Trail at the Pino Arroyo – I believe this should be removed?

2. **Other PRD comments:**

   a. The Landscape Plan shows a tree in the easement area (see inserts) – please remove and adjust trees out of easement area. (Perhaps keep one shade tree and move it over.)

Easement Exhibit:

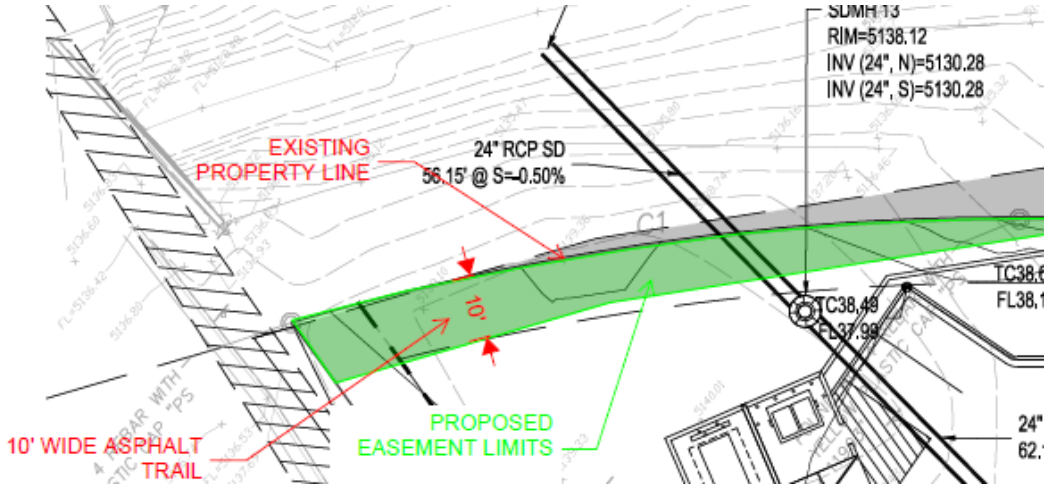

DEVELOPMENT REVIEW BOARD

Parks and Recreation Department

Landscape Plan:

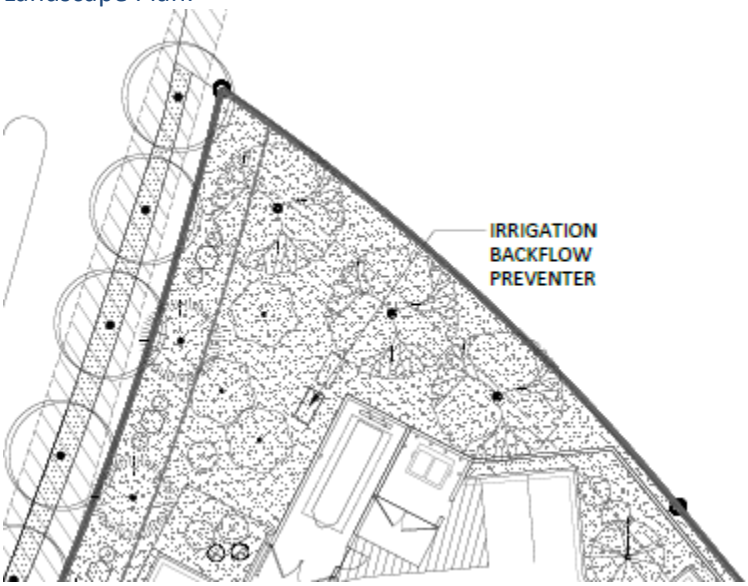

b. Please add a few shade trees in the northeast landscape area to shade patios and future trail:

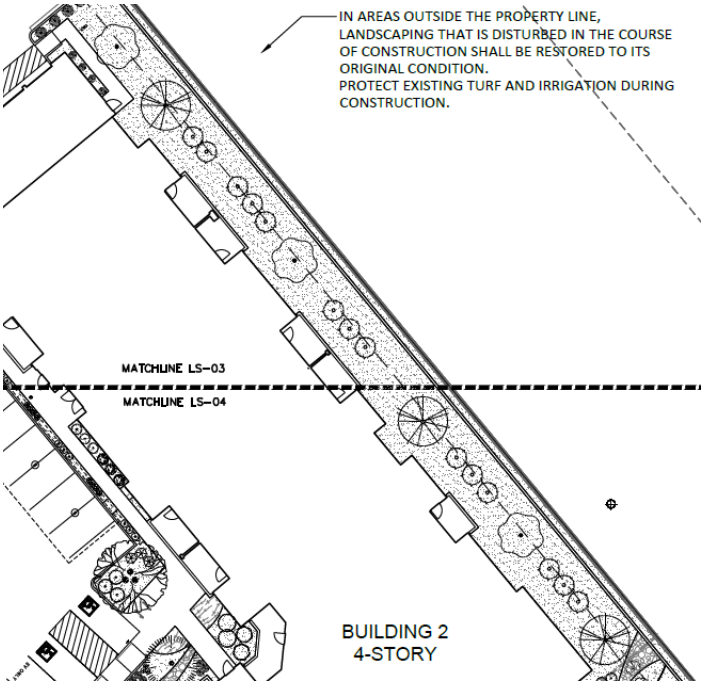

c. #24 is not in Keyed Notes?

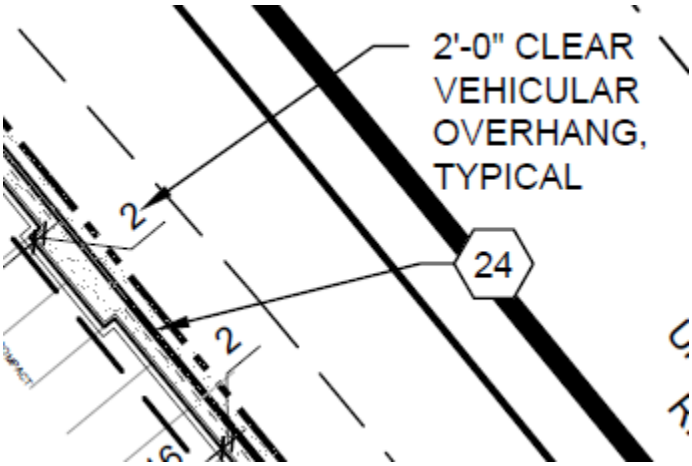

d. Please add note per regulation "IDO 5-6(C)(5)(e) Organic mulch is required as ground cover under trees within a 5-foot radius around the tree trunk, but not directly against the trunk. In these areas, weed barrier fabric is prohibited." On the Landscape Plans by the materials legend.