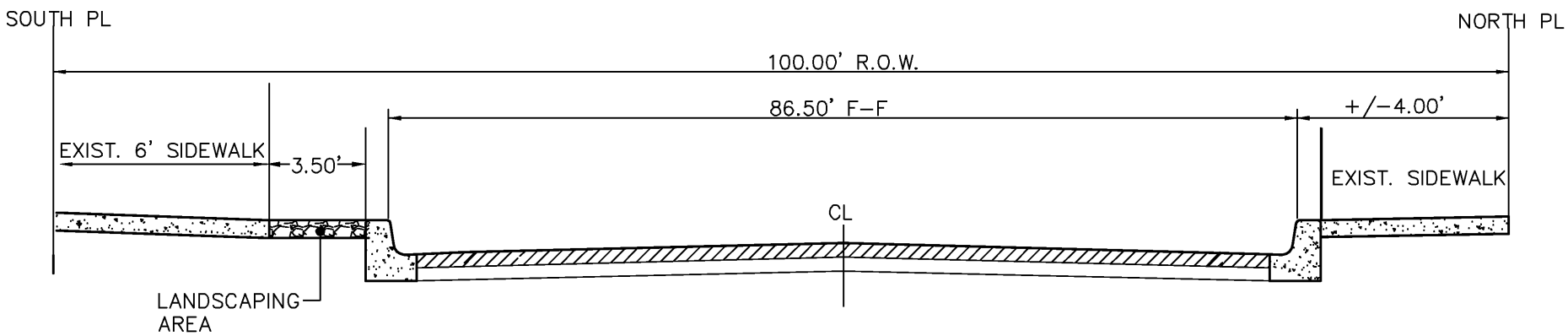

CANDELARIA ROAD, NE

100.00' R.O.W. AND STREET SECTION