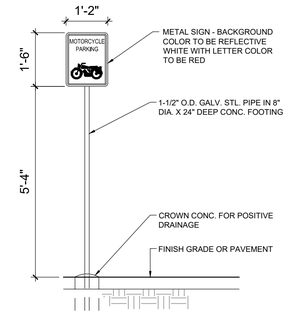

D3 MOTORCYCLE SIGN

SCALE: 1/2" = 1'-0"

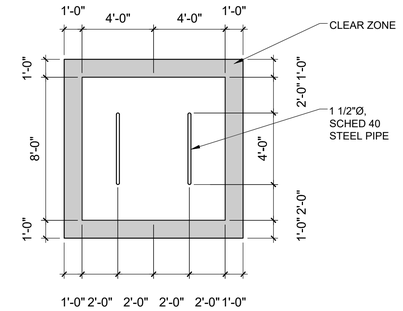

D4 BIKE PARKING

SCALE: 1/4" = 1'-0"

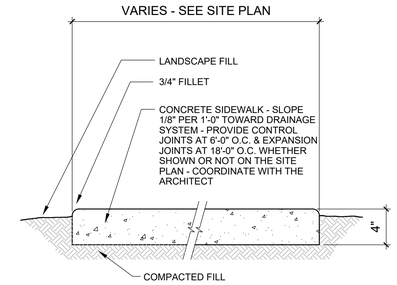

D5 SIDEWALK DETAIL

SCALE: 1 1/2" = 1'-0"

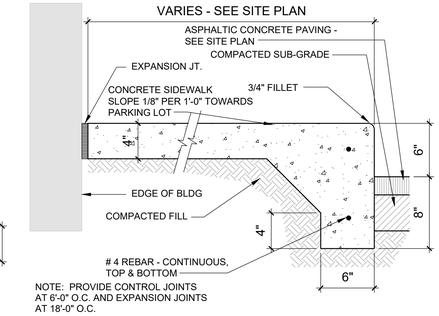

D6 SIDEWALK DETAIL

SCALE: 1 1/2" = 1'-0"

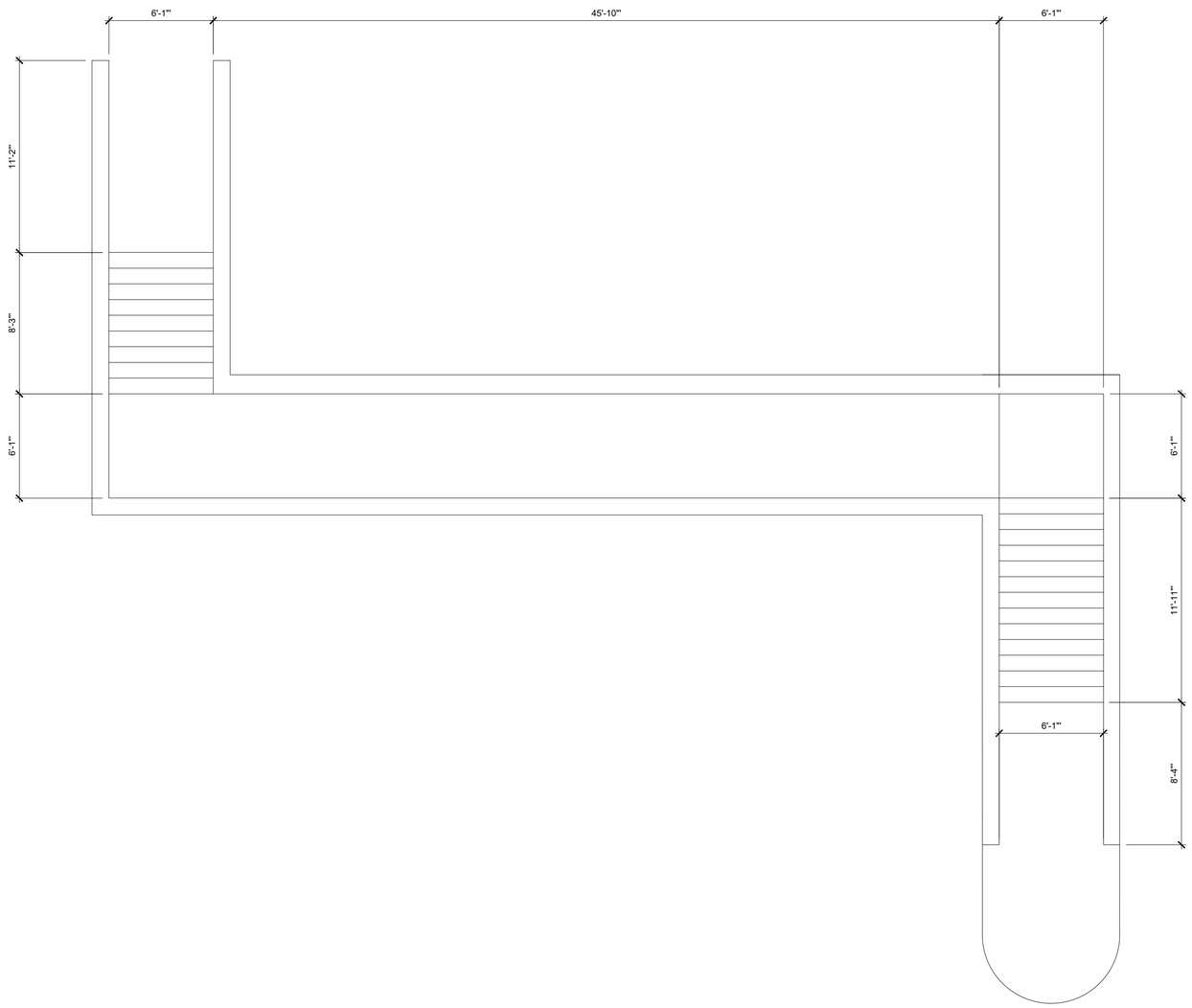

A1 ENLARGED STAIR PLAN

SCALE: 1/4" = 1'-0"

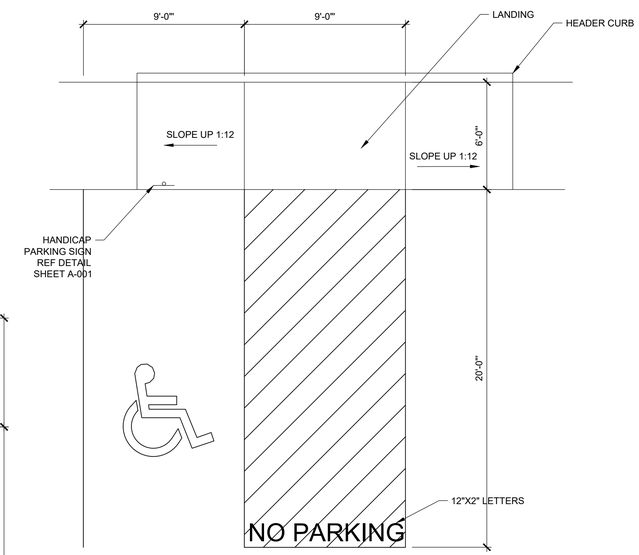

B5 TYPICAL HC PARKING STALL

SCALE: 1/4" = 1'-0"

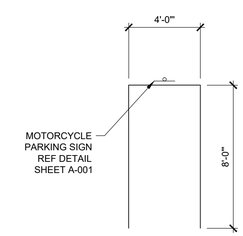

B6 TYPICAL MC PARKING

SCALE: 1/4" = 1'-0"

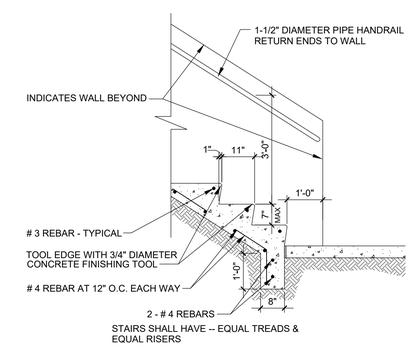

A5 STAIR DETAIL

SCALE: 1/2" = 1'-0"

SCOTT C. ANDERSON
& associates architects
7604 rio penasco nw
albuquerque, nm 87120
andersonscott@comcast.net
505.401.7575

TRANSPORT APARTMENTS
3000 TRANSPORT ST SE
ALBUQUERQUE, NM 87106

DRAWING TITLE

SITE DETAILS

SEAL: STATE OF NEW MEXICO — SCOTT C. ANDERSON No. 4341 10/19/2021 — REGISTERED ARCHITECT

DESIGNED	PROJECT NO
DRAWN	SCALE
CHECKED	DRAWING NO **A-002**
REVIEWED	
DATE 10/19/2021	____ OF ____