TESLA

SUPERCHARGING STATION

5161 LANG AVE NE (TESLA STATION)
ALBUQUERQUE, NM 87109
TRT18975

GPD GROUP
Professional Corporation
520 South Main Street, Suite 2531
Akron, OH 44311
330.572.2100 Fax 330.572.2101

TESLA
3600 DEER CREEK RD
PALO ALTO, CA 94304
(650) 681-5000

SITE LAYOUT

NOTE:
PROPERTY LINE AND RIGHT-OF-WAY BOUNDARIES ARE SHOWN FOR REFERENCE ONLY. REFER TO SURVEY BY OTHERS FOR EXACT LOCATION.

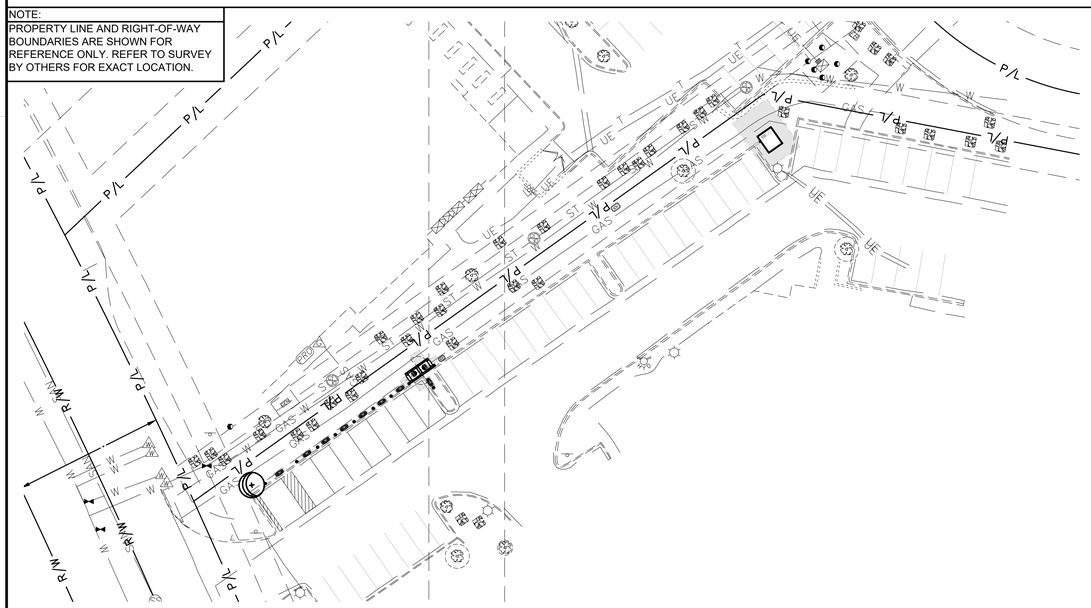

AERIAL MAP

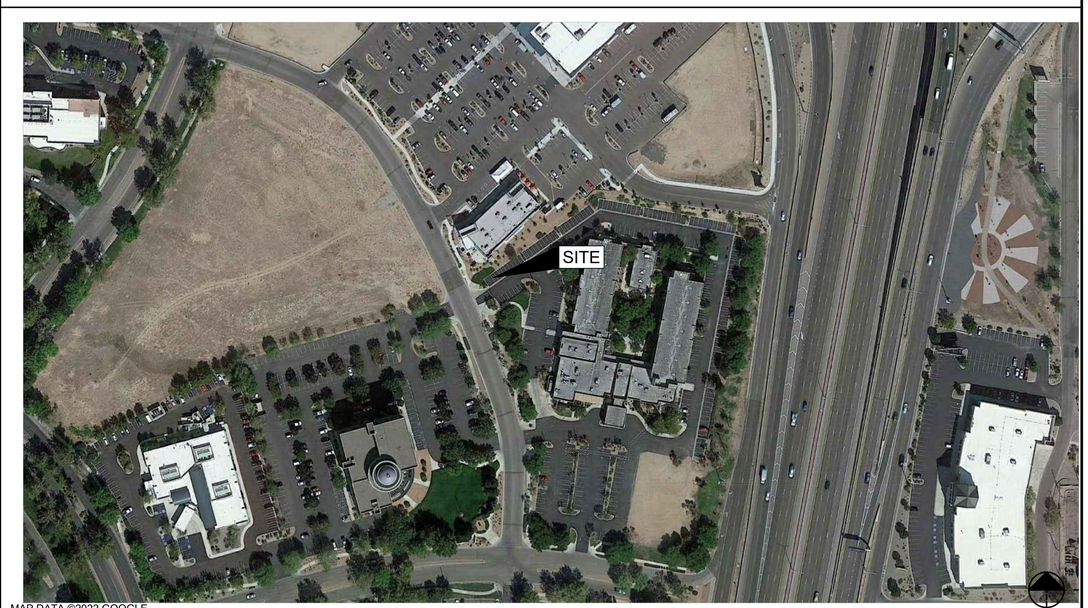

MAP DATA ©2022 GOOGLE

SITE INFORMATION

ADDRESS:
5161 LANG AVE NE
(TESLA STATION)
ALBUQUERQUE, NM 87109

POWER COMPANY:
PNM
CONTACT: DANIELLE MONTOYA
(480) 337-6589
DMONTOYA@BURNSMCD.COM

PROPERTY OWNER:
TITAN JOURNAL CENTER HOTEL LLC
CONTACT: MATT LAMMERS
(505) 515-2901

EQUIPMENT SUPPLIER:
TESLA, INC.
3500 DEER CREEK ROAD
PALO ALTO, CA 94304
(650) 681-5000

LATITUDE (NAVD88)
N 35°10'18.6"
35.171828°

LONGITUDE (NAVD88)
W 106°35'11.7"
-106.586589°

PERMITTING JURISDICTION:
CITY OF ALBUQUERQUE
CONTACT: RICK DE RYES
(505) 924-3860

COUNTY:
BERNALILLO

GPD GROUP PROFESSIONAL CORPORATION CONTACTS:

PROJECT MANAGER:
ZACHERY SHEETS, PE - OH# 77870
(330) 572-2148
ZSHEETS@GPDGROUP.COM

PROJECT COORDINATOR:
BRIAN GUTHRIDGE
(330) 572-2249
BGUTHRIDGE@GPDGROUP.COM

PERMIT COORDINATOR:
SARAH HONEYCUTT
(330) 572-3508
GPDCHARGEPERMITS@GPDGROUP.COM

UTILITY COORDINATOR
RICH VINEYARD
(216) 413-5953
RVINEYARD@GPDGROUP.COM

FLOOD HAZARD AREA NOTE

THE SITE IS LOCATED IN FLOOD ZONE "X" (AREA DETERMINED TO BE OUTSIDE THE 0.2% ANNUAL CHANCE FLOODPLAIN) PER FLOOD INSURANCE MAP NUMBER 35001C0137H, EFFECTIVE DATE - 08/16/2012.

APPLICABLE CODES

ALL WORK SHALL COMPLY WITH THE FOLLOWING APPLICABLE CODES:

2015 INTERNATIONAL BUILDING CODE
2017 NEW MEXICO ELECTRIC CODE W/ AMENDMENTS

IN THE EVENT OF CONFLICT, THE MOST RESTRICTIVE CODE SHALL PREVAIL.

New Mexico One Call, Inc.
811 or 800-321-2537

PROJECT DESCRIPTION

- INSTALL (2) V3 SUPERCHARGER CABINETS
- INSTALL (8) TESLA SUPERCHARGER POSTS
- INSTALL (1) UTILITY TRANSFORMER WITH INTEGRATED CT CABINET
- INSTALL (1) UTILITY METER
- INSTALL (2) 600A SERVICE ENTRANCE DISCONNECT ENCLOSURES

BEFORE SCALING & PLAN REPRODUCTION WARNING

CONTRACTORS SHALL VERIFY ALL PLANS, EXISTING DIMENSIONS, AND FIELD CONDITIONS ON THE JOB SITE AND SHALL IMMEDIATELY NOTIFY TESLA IN WRITING OF ANY DISCREPANCIES BEFORE PROCEEDING WITH THE WORK OR BE RESPONSIBLE FOR SAME.

DESIGN LOADING

LATERAL LOAD DESIGN DATA:
WIND DESIGN DATA (ASCE 7-10):

BASIC WIND SPEED (V_{ult}):	115 MPH
BASIC WIND SPEED (V_{asd})	89 MPH
IMPORTANCE FACTOR	1.0
EXPOSURE CATEGORY	C

SEISMIC DESIGN DATA (ASCE 7-10):

1.0 SEISMIC IMPORTANCE FACTOR (I)	1.0
RISK CATEGORY	II
SITE CLASS (ASSUMED)	D
MAPPED SPECTRAL RESPONSE	
SHORT PERIODS (Ss)	0.4420
1 SEC. PERIODS (S_1)	0.1340
SPECTRAL RESPONSE COEFF.	
SHORT PERIODS (S_{DS})	0.4262
1 SEC. PERIODS (S_{D1})	0.2023
SEISMIC DESIGN CATEGORY	D
FROST DEPTH:	20"

DRAWING INDEX

T-1	TITLE SHEET & PROJECT DATA
CIVIL	SHEET TITLE
GN-1	GENERAL NOTES
-	TOPOGRAPHIC SURVEY
C-1	DEMOLITION PLAN
C-2	SITE PLAN
C-3	CIVIL DETAILS
ELECTRICAL	SHEET TITLE
EN-1	ELECTRICAL GENERAL NOTES
E-1	ELECTRICAL EQUIPMENT PLAN
E-2	ONE-LINE DIAGRAM
E-3	ELECTRICAL DETAILS
-	TESLA DATASHEET

REFERENCED DOCUMENTS
SUPERCHARGER INSTALLATION MANUAL
SUPERCHARGER POST INSTALLATION MANUAL
UTILITY DESIGN DOCUMENTS
ELECTRICAL EQUIPMENT CUTSHEETS

REV.	DATE	DESCRIPTION
A	09.01.22	ISSUED FOR SITE SKETCH REVIEW
B	09.22.22	ISSUED FOR 90% REVIEW
C	10.06.22	SIGNED AND SEALED

LEONARDO A. SPERRA
NEW MEXICO
24262
PROFESSIONAL ENGINEER
10/06/22

5161 LANG AVE NE
(TESLA SUPERCHARGER)
TRT18975 - ALBUQUERQUE, NM 87109

TITLE SHEET & PROJECT DATA

ISSUED FOR:	
PERMIT	XXX
BID	XXX
CONSTRUCTION	XXX
RECORD	XXX

INSTALL MANAGER	DESIGNER
BETH SORENSEN	RDV

JOB NO.
2022141.67

T-1

Drawing Name: O:\2022\2022141\67 - TRT 18975 - Albuquerque, NM - North Journal Center\dwg\2022141.67 - Albuquerque,NM - CD90.dwg
October 6, 2022 2:40 PM - MLogan

GENERAL CONSTRUCTION NOTES

1. ALL WORK SHALL COMPLY WITH ALL STATE AND LOCAL CODES AND ANY OTHER REGULATING AUTHORITIES WHICH HAVE AUTHORITY OVER ANY PORTION OF THE WORK.
2. PRIOR TO COMMENCEMENT OF ANY WORK, THE CONTRACTOR SHALL VERIFY EXISTING CONDITIONS AND NOTIFY THE DESIGN PROFESSIONAL IN RESPONSIBLE CHARGE FROM TESLA OF ANY DISCREPANCIES. ANY WORK PERFORMED IN CONFLICT WITH THE CONTRACT DOCUMENTS SHALL BE CORRECTED AT THE CONTRACTORS SOLE EXPENSE.
3. CONTRACTOR INITIATED CHANGES SHALL BE SUBMITTED IN WRITING TO TESLA FOR APPROVAL BEFORE MAKING ANY CHANGES. DEVIATION FROM PLANS BEFORE WRITTEN APPROVAL FROM TESLA PLACES LIABILITY ON THE CONTRACTOR.
4. ALL EQUIPMENT SHALL BE MOUNTED AS SHOWN. WHERE DETAILS ARE NOT PROVIDED, CONTRACTOR SHALL USE BEST CONSTRUCTION PRACTICES.
5. ALL SURFACES SHALL BE PATCHED AND PAINTED AROUND NEW DEVICES AND EQUIPMENT TO MATCH EXISTING FINISHES.
6. ANY METAL SHAVINGS FROM SITE WORK SHALL BE CLEANED FROM ALL SURFACES WHERE OXIDIZED OR CONDUCTIVE METAL SHAVINGS MAY CAUSE RUST, ELECTRICAL SHORT CIRCUITS, OR OTHER DAMAGE.
7. APPROVALS FROM BUILDING INSPECTORS SHALL NOT CONSTITUTE AUTHORITY TO DEVIATE FROM THE DRAWINGS.
8. NEW PAVEMENT INSTALLED AS PART OF THIS PROJECT SHALL MATCH EXISTING PAVEMENT SECTION. EXISTING PAVEMENT DEPTHS SHALL BE MAINTAINED.
9. THE TOPOGRAPHIC SURVEY BY CLARK LAND SURVEYING, INC, DATED 06/18/2022 SHALL BE CONSIDERED PART OF THESE PLANS. THE G.C. IS RESPONSIBLE FOR LOCATING EXISTING CONDITION IMPROVEMENTS PER THESE PLANS.
10. THE LOCATIONS OF UNDERGROUND FACILITIES SHOWN ON THE PLAN ARE BASED ON FIELD SURVEYS. DUE TO THE LIMITATIONS IN TECHNOLOGY AND GROUND CONDITIONS, NOT ALL UNDERGROUND UTILITIES ARE ABLE TO BE LOCATED. IT SHALL BE THE CONTRACTOR'S FULL RESPONSIBILITY TO CONTACT THE VARIOUS UTILITY COMPANIES TO LOCATE THEIR FACILITIES PRIOR TO STARTING CONSTRUCTION.
11. ALL PROPERTY LINES, RIGHT OF WAYS, CENTERLINES, DIMENSIONS, GRADES, AND UTILITY LOCATIONS SHOWN ON THESE PLANS WERE BASED ON A TOPOGRAPHIC SURVEY. THE CONTRACTOR SHALL FIELD VERIFY ALL EXISTING CONDITIONS PRIOR TO CONSTRUCTION.
12. THE GENERAL CONTRACTOR SHALL VISIT THE SITE AND SHALL FAMILIARIZE THEMSELVES WITH ALL CONDITIONS AFFECTING THE PROPOSED WORK. ANY DISCREPANCIES SHALL BE BROUGHT TO THE ATTENTION OF TESLA PRIOR TO THE COMMENCEMENT OF WORK.
13. ALL WORK CARRIED OUT SHALL COMPLY WITH ALL APPLICABLE MUNICIPAL AND UTILITY COMPANY SPECIFICATIONS AND FEDERAL, STATE AND LOCAL JURISDICTION CODES, ORDINANCES AND APPLICABLE REGULATIONS.
14. UNLESS NOTED OTHERWISE, THE WORK SHALL INCLUDE FURNISHING MATERIALS, EQUIPMENT, APPURTENANCES, AND LABOR NECESSARY TO COMPLETE ALL INSTALLATIONS AS INDICATED ON THE DRAWINGS.
15. PLANS ARE NOT TO BE SCALED. THESE PLANS ARE INTENDED TO BE A DIAGRAMMATIC OUTLINE ONLY UNLESS OTHERWISE NOTED. DIMENSIONS SHOWN ARE TO FINISH SURFACES UNLESS OTHERWISE NOTED. SPACING BETWEEN EQUIPMENT IS THE MINIMUM REQUIRED CLEARANCE. THEREFORE, IT IS CRITICAL TO FIELD VERIFY DIMENSIONS, SHOULD THERE BE ANY QUESTIONS REGARDING THE CONTRACT DOCUMENTS, THE CONTRACTOR SHALL BE RESPONSIBLE FOR OBTAINING A CLARIFICATION FROM TESLA PRIOR TO PROCEEDING WITH THE WORK. DETAILS ARE INTENDED TO SHOW DESIGN INTENT. MODIFICATIONS MAY BE REQUIRED TO SUIT JOB DIMENSIONS OR CONDITIONS AND SUCH MODIFICATIONS SHALL BE INCLUDED AS PART OF WORK AND APPROVED BY TESLA PRIOR TO PROCEEDING WITH WORK.
16. THE CONTRACTOR SHALL INSTALL ALL EQUIPMENT AND MATERIALS IN ACCORDANCE WITH MANUFACTURER'S RECOMMENDATIONS UNLESS SPECIFICALLY STATED OTHERWISE.
17. IF THE SPECIFIED EQUIPMENT CANNOT BE INSTALLED AS SHOWN ON THESE DRAWINGS, THE CONTRACTOR SHALL PROPOSE AN ALTERNATIVE INSTALLATION SPACE FOR APPROVAL BY TESLA PRIOR TO PROCEEDING.
18. THE GENERAL CONTRACTOR SHALL COORDINATE WORK AND SCHEDULE WORK ACTIVITIES WITH OTHER DISCIPLINES.
19. CONSTRUCTION SHALL BE DONE IN A WORKMANLIKE MANNER BY COMPETENT EXPERIENCED WORKMAN IN ACCORDANCE WITH APPLICABLE CODES AND THE BEST ACCEPTED PRACTICE.
20. THE CONTRACTOR SHALL PROTECT EXISTING IMPROVEMENTS, PAVEMENTS, CURBS, LANDSCAPING AND STRUCTURES. ANY DAMAGED PART SHALL BE REPAIRED AT CONTRACTOR'S EXPENSE TO THE SATISFACTION OF THE OWNER.
21. THE CONTRACTOR SHALL CONTACT UTILITY LOCATING SERVICES PRIOR TO THE START OF CONSTRUCTION. ALL EXISTING ACTIVE SEWER, WATER, GAS, ELECTRIC, AND OTHER UTILITIES SHALL BE PROTECTED AT ALL TIMES.
22. INFORMATION SHOWN ON THESE DRAWINGS WAS OBTAINED FROM SITE VISITS AND/OR DRAWINGS PROVIDED BY THE SITE OWNER. CONTRACTORS SHALL NOTIFY TESLA OF ANY DISCREPANCIES PRIOR TO ORDERING MATERIAL OR PROCEEDING WITH CONSTRUCTION.
23. FIELD TESTING OF EARTHWORK COMPACTION AND CONCRETE CYLINDERS SHALL BE PERFORMED BY AN INDEPENDENT TESTING LAB. THIS WORK TO BE COORDINATED BY THE CONTRACTOR.
25. PRIOR TO THE START OF ANY DEMOLITION OR CONSTRUCTION ACTIVITIES, PROVIDE EROSION CONTROL MEASURES IN ACCORDANCE WITH STATE DOT, LOCAL PERMITTING AGENCY AND EPA REQUIREMENTS.
26. PROVIDE AND MAINTAIN ALL TEMPORARY FENCING, BARRICADES, WARNING SIGNALS AND SIMILAR DEVICES NECESSARY TO PROTECT AGAINST THEFT FROM PROPERTY DURING THE ENTIRE PERIOD OF CONSTRUCTION. REMOVE ALL SUCH DEVICES UPON COMPLETION OF THE WORK.
27. EXISTING UTILITIES: DO NOT INTERRUPT EXISTING UTILITIES SERVING FACILITIES OCCUPIED BY THE OWNER OR OTHERS, EXCEPT WHEN PERMITTED IN WRITING FROM TESLA.
28. GRANULAR BACKFILL: SHALL MEET THE FOLLOWING GRADATION PER THE TABLE BELOW:

SIEVE SIZE	TOTAL PERCENT PASSING
1 1/2 INCH (37.5 MM)	100
1 INCH (25.0 MM)	75 TO 100
3/4 INCH (19.00 MM)	80 TO 100
3/8 INCH (9.5 MM)	35 TO 75
NO. 4 (4.75 MM)	30 TO 60
NO. 30 (0.600 MM)	7 TO 30
NO. 200 (0.75 MM)	3 TO 15

29. GRANULAR BEDDING AND TRENCH BACKFILL: WELL-GRADED SAND MEETING THE GRADATION REQUIREMENTS OF ASTM D2487 (SW OR SW-SM).
30. UNSUITABLE MATERIAL: HIGH AND MODERATELY PLASTICS SILTS AND CLAYS (LL>45). MATERIAL CONTAINING REFUSE, FROZEN LUMPS, DEMOLISHED BITUMINOUS MATERIAL, VEGETATIVE MATTER, WOOD, STONES IN EXCESS OF 3 INCHES IN ANY DIMENSION, AND DEBRIS AS DETERMINED BY THE CONSTRUCTION MANAGER. TYPICAL THESE WILL BE SOILS CLASSIFIED BY ASTM AS PT, MH, CH, OH, ML, AND OL.
31. PERFORM ALL GRADING TO PROVIDE POSITIVE DRAINAGE AWAY FROM STRUCTURES AND SMOOTH, EVEN SURFACE DRAINAGE OF THE ENTIRE AREA WITHIN THE LIMITS OF CONSTRUCTION. GRADING SHALL BE COMPATIBLE WITH ALL SURROUNDING TOPOGRAPHY AND STRUCTURES.

GENERAL FOUNDATION NOTES

1. DETERMINATION OF FINAL BEARING ELEVATIONS, TOPSOIL AND EXCAVATION STRIPPING DEPTH, INSPECTION OF ALL SUBSOIL EXPOSED DURING STRIPPING, SITE GRADING, EXCAVATION OPERATIONS, APPROVAL OF FILL MATERIALS, DENSITY TESTING OF FILLS TO ENSURE PLACEMENT PER SPECIFICATION REQUIREMENTS, INSPECTION OF FOUNDATION BEARING SURFACES, AND VERIFICATION OF ALLOWABLE BEARING PRESSURES ARE THE TESTING LABORATORY'S RESPONSIBILITY.
2. ALL FOUNDATIONS ARE TO REST ON FIRM UNDISTURBED SOIL OR COMPACTED FILL FREE FROM ORGANIC MATTER. IF POOR SOIL CONDITIONS ARE ENCOUNTERED AT FOUNDATION DEPTHS SHOWN, NOTIFY OWNER'S REPRESENTATIVE BEFORE PROCEEDING WITH CONSTRUCTION.
3. CONTRACTOR SHALL COMPACT SUBGRADE. SEE FROST/NO FROST DESIGN NOTES THIS SHEET.
4. FOUNDATIONS HAVE BEEN DESIGNED BASED ON AN ASSUMED ALLOWABLE SOIL BEARING CAPACITY OF 1500 PSF UNLESS NOTED OTHERWISE.
5. NEW FOOTINGS PLACED ADJACENT TO EXISTING FOOTINGS SHALL BEAR AT THE SAME ELEVATION, UNLESS NOTED OTHERWISE.
6. STEP FOOTINGS AT A RATIO OF ONE (1) VERTICAL TO TWO (2) HORIZONTAL WITH A MAXIMUM VERTICAL STEP OF 2'-0" UNLESS NOTED OTHERWISE.
7. INUNDATION AND LONG TERM EXPOSURE OF BEARING SURFACES, WHICH WILL RESULT IN DETERIORATION OF BEARING FORMATIONS, SHALL BE PREVENTED. FOOTINGS SHALL BE PLACED IMMEDIATELY FOLLOWING FOOTING EXCAVATIONS AND BEARING SURFACE INSPECTION.
8. UTILITY LINES SHALL NOT BE PLACED THROUGH OR BELOW FOUNDATIONS WITHOUT THE APPROVAL OF THE ENGINEER OF RECORD.
9. GROUNDWATER ASSUMED TO BE BELOW EXCAVATION DEPTH. IF GROUNDWATER IS ENCOUNTERED DURING EXCAVATION ON SITE, CONTRACTOR SHALL PROVIDE FOR ANY SITE DRAINAGE AND DE-WATERING REQUIRED.
10. CONTRACTOR TO VERIFY LOCATION OF ALL EXISTING PUBLIC AND PRIVATE UTILITIES PRIOR TO EXCAVATION. IF NECESSARY, UTILITIES SHALL BE RELOCATED PRIOR TO FOUNDATION INSTALLATION.

CONCRETE

1. ALL CONCRETE CONSTRUCTION SHALL CONFORM TO ACI 301-10, "STANDARD SPECIFICATION FOR STRUCTURAL CONCRETE" AND ACI 302, 305 AND 306 UNLESS NOTED OTHERWISE.
2. ALL DETAILING, FABRICATION AND PLACING OF CONCRETE SHALL CONFORM TO ACI 318-14, "BUILDING CODE REQUIREMENTS FOR STRUCTURAL CONCRETE" AND THE LATEST ACI "MANUAL OF STANDARD PRACTICE FOR DETAIL REINFORCED CONCRETE STRUCTURES" UNLESS NOTED OTHERWISE.
3. SAFETY AND PERFORMANCE OF THE STRUCTURE ARE THE RESPONSIBILITY OF THE CONTRACTOR INSOFAR AS THEY ARE AFFECTED BY THE LOCATION AND DETAILS OF CONSTRUCTION JOINTS. SHOP DRAWINGS OF THE PROPOSED CONSTRUCTION JOINT LOCATIONS AND DETAILS ARE TO BE SUBMITTED TO THE ARCHITECT FOR APPROVAL.
4. MAXIMUM SIZE OF AGGREGATE SHALL NOT EXCEED SIZE SUITABLE FOR INSTALLATION METHOD UTILIZED OR 1/3 CLEAR DISTANCE BEHIND OR BETWEEN REINFORCING. MAXIMUM SIZE MAY BE INCREASED TO 2/3 CLEAR DISTANCE PROVIDED WORKABILITY AND METHODS OF CONSOLIDATION SUCH AS VIBRATING WILL PREVENT HONEYCOMBS OR VOIDS.
5. ALL CONCRETE UNLESS NOTED OTHERWISE SHALL DEVELOP A MINIMUM COMPRESSIVE STRENGTH IN 28 DAYS AS FOLLOWS: ALL CONCRETE - 4500 PSI. ALL CONCRETE EXPOSED TO WEATHER SHALL CONTAIN 6% (± 1%) AIR ENTRAINMENT.
6. REINFORCING BARS SHALL CONFORM TO ASTM A615, GRADE 60.
7. WELDED WIRE FABRIC REINFORCING SHALL CONFORM TO ASTM A1064 AND BE FURNISHED IN FLAT SHEETS AND INSTALLED ON CHAIRS OR PRECAST CONCRETE BLOCKS.
8. NO TACK WELDING OF REINFORCING IN THE FIELD IS PERMITTED.
9. PROVIDE CORNER BARS AT ALL LOCATIONS WHERE REINFORCEMENT CHANGES DIRECTION.
10. PROVIDE STRAIGHT AND DIAGONAL BARS AT EDGES OF ALL OPENINGS.
11. REINFORCING EMBEDMENT AND LAP SPLICES (INCHES) FOR 4500 PSI CONCRETE

	OTHER		TOP*	
BAR SIZE	ANCHORAGE	SPLICE	ANCHORAGE	SPLICE
# 3	15	19	19	24
# 4	19	25	25	33
# 5	24	31	31	41
# 6	29	37	37	49

* HORIZONTAL BARS WITH MORE THAN 12" OF CONCRETE BELOW BAR

12. NON-SHRINK GROUT SHALL MEET A MINIMUM 28-DAY COMPRESSIVE STRENGTH OF 6000 PSI.

CHARGING CABINET PRE-FABRICATED ASSEMBLY FOUNDATION & ALL CHARGING POST FOUNDATIONS - FROST DESIGN NOTES (BOTTOM OF FOUNDATION ABOVE FROST LEVEL):

1. CONCRETE FOUNDATIONS SHOULD BEAR DIRECTLY ON A PROPERLY COMPACTED FREE-DRAINING GRANULAR FILL CONSISTING OF NO. 57 STONE OR AN APPROVED EQUIVALENT.
2. GRANULAR FILL SHOULD EXTEND VERTICALLY TO THE MINIMUM RECOMMENDED REGIONAL FROST DEPTH AND LATERALLY 2/3D FROM THE FOUNDATION PERIMETER (EXCLUDING SIDE OF PERIMETER ADJACENT TO CURB). GRANULAR FILL SHOULD BE PLACED IN 8 INCH LOOSE LIFTS AND COMPACTED WITH A VIBRATORY COMPACTOR. THE COMPACTION EQUIPMENT SHOULD BE OPERATED OVER THE FULL WIDTH OF THE FOUNDATION UNDERCUT AREA UNTIL VISIBLE DEFORMATION OF THE BACKFILL CEASES. SEE SHEET T-1 FOR LOCAL FROST DEPTH.
3. GEOTEXTILE (FILTER FABRIC) SHOULD BE PLACED BETWEEN THE GRANULAR BACKFILL AND COHESIVE SOILS TO PRECLUDE THE INFILTRATION OF FINES. SPEC AS FOLLOWS:

   SEPARATION GEOTEXTILE: WOVEN GEOTEXTILE FABRIC, MANUFACTURED FOR SEPARATION APPLICATIONS, MADE FROM POLYOLEFINS OR POLYESTERS; WITH ELONGATION LESS THAN 50 PERCENT; COMPLYING WITH AASHTO M 288 AND THE FOLLOWING, MEASURED PER TEST METHODS REFERENCED:
   SURVIVABILITY: CLASS 2; AASHTO M 288.
   GRAB TENSILE STRENGTH: 247 LBF (1100 N); ASTM D 4632.
   SEWN SEAM STRENGTH: 222 LBF (990 N); ASTM D 4632.
   TEAR STRENGTH: 90 LBF (400 N); ASTM D 4533.
   PUNCTURE STRENGTH: 90 LBF (400 N); ASTM D 4833.
   APPARENT OPENING SIZE: NO. 60 (0.250-MM) SIEVE, MAXIMUM; ASTM D 4751.
   PERMITTIVITY: 0.02 PER SECOND, MINIMUM; ASTM D 4491.
   UV STABILITY: 50 PERCENT AFTER 500 HOURS' EXPOSURE; ASTM D 4355.

CHARGING CABINET PRE-FABRICATED ASSEMBLY FOUNDATION & ALL CHARGING POST FOUNDATIONS - NO FROST DESIGN NOTES (BOTTOM OF FOUNDATION BELOW FROST LEVEL)

1. CONCRETE FOUNDATIONS SHOULD BE SUPPORTED ON A 6 INCH COMPACTED LAYER OF APPROVED FREE-DRAINING GRANULAR MATERIAL.
2. APPROVED MATERIAL SHOULD BE COMPACTED OVER THE FULL WIDTH OF THE INFILL AREA UNTIL VISIBLE DEFORMATION OF THE BACKFILL CEASES.

STRUCTURAL STEEL

MATERIAL PROPERTIES:

PLATE: ASTM A36 UNO
PIPE: ASTM A53, TYPE E OR S, GRADE B (Fy = 35 KSI)
TUBE: ASTM A1085 GRADE A (Fy = 50 KSI)

1. DETAILING, FABRICATION, AND ERECTION SHALL CONFORM TO THE 2010 AISC (360-10) SPECIFICATIONS.
2. ALL WELDING SHALL BE DONE USING E-70XX ELECTRODES IN ACCORDANCE WITH AWS D1.1 SPECIFICATIONS.
3. FIELD VERIFY ALL CONDITIONS AT AND CONNECTIONS TO THE EXISTING CONSTRUCTION BEFORE FABRICATION.
4. ALL EXPOSED STRUCTURAL STEEL, ANCHOR RODS AND BOLTS SHALL BE HOT DIP GALVANIZED PER ASTM A123.
5. UNLESS NOTED OTHERWISE ON THE DRAWING, ALL ANCHOR RODS SHALL CONFORM TO ASTM F1554 Gr 55 WITH HEAVY HEXAGONAL NUT.
6. SUBMIT FABRICATION AND ERECTION DRAWINGS SHOWING ALL DETAILS, CONNECTIONS, MATERIAL DESIGNATIONS, AND TOP STEEL ELEVATIONS FOR APPROVAL. THE SHOP DRAWINGS WILL BE REVIEWED FOR GENERAL CONFORMANCE TO THE CONTRACT DRAWINGS. SUCH APPROVAL SHALL NOT RELIEVE THE FABRICATOR/CONTRACTOR OF THE RESPONSIBILITY FOR EITHER THE ACCURACY OF THE DETAILED DIMENSIONS IN THE SHOP AND ERECTION DRAWINGS OR THE GENERAL FIT-UP OF PARTS THAT ARE TO BE ASSEMBLED IN THE FIELD.

TRAFFIC CONTROL NOTES

1. DURING THE CONSTRUCTION PERIOD; SIDEWALKS, SHOULDERS, TRAVEL LANE(S), OR STREETS MAY HAVE TO BE TEMPORARILY CLOSED OR RESTRICTED FOR THE UNLOADING / LOADING OF EQUIPMENT OR AS A RESULT OF CONSTRUCTION ACTIVITIES THEMSELVES. IT IS THE CONTRACTOR'S RESPONSIBILITY TO COORDINATE DIRECTLY WITH THE LOCAL GOVERNING AUTHORITIES ON ANY SUCH CLOSURES AND MUST OBTAIN WRITTEN PERMISSION FROM THE APPROPRIATE AUTHORITIES PRIOR TO IMPLEMENTING SUCH CLOSURES OR RESTRICTIONS. ANY CLOSURE OR RESTRICTION MUST COMPLY WITH THE STATE MANUAL OF UNIFORM CONTROL DEVICES (MUTCD) FOR STREETS AND HIGHWAYS (LATEST EDITION AND REVISION), AND WITH ANY AND ALL ADDITIONAL APPLICABLE CITY, VILLAGE, OR COUNTY REQUIREMENTS. THE CONTRACTOR SHALL PREPARE AND SUBMIT A FORMAL TRAFFIC CONTROL / MOT PLAN TO THE LOCAL GOVERNING AUTHORITIES IF REQUESTED. ALL REQUIRED CONSTRUCTION TRAFFIC MAINTENANCE DEVICES SHALL BE PROVIDED, ERECTED AND MAINTAINED, AND ULTIMATELY REMOVED BY THE CONTRACTOR.
2. THE CONTRACTOR SHALL MAINTAIN SAFE AND SATISFACTORY ACCESS TO ALL ABUTTING PROPERTIES AND INTERSECTING STREET AT ALL TIMES DURING THE CONSTRUCTION OF THE IMPROVEMENTS ANTICIPATED. DRIVEWAYS MUST BE MAINTAINED AND ALL TRENCHES SHALL BE BACKFILLED AT THE END OF EACH WORK DAY. PER THE STATE MUTCD AND OTHER APPLICABLE APPROPRIATE GOVERNING REQUIREMENTS, THE CONTRACTOR SHALL PROVIDE ALL NECESSARY SAFEGUARDS SUCH AS BARRICADES, SATISFACTORY BARRIERS, CONES, SIGNAGE, BARRELS, MESSAGE BOARDS, LIGHTING, FLAGMEN, LAW ENFORCEMENT OFFICERS, ETC. TO AVOID DAMAGE AND / OR INJURY TO VEHICLES AND PERSONS TRAVERSING THE CONSTRUCTION AREA.

SPECIAL INSPECTIONS

1. TESLA SHALL BE RESPONSIBLE FOR SCHEDULING AND OVERSEEING OF ALL SPECIAL INSPECTIONS REQUIRED BY THE AUTHORITY HAVING JURISDICTION. SPECIAL INSPECTIONS MUST BE COMPLETED PRIOR TO FINAL INSPECTION APPROVAL.

PAVEMENT MARKING NOTES

1. ALL PAVEMENT MARKINGS TO BE WHITE PAVEMENT PAINT, UNLESS STATED OTHERWISE. ALL PAVEMENT MARKINGS WITHIN ADA AREAS SHALL BE PAINTED BLUE EXCEPT FOR COLORS DEFINED ON THE ADA PAVEMENT SYMBOL.
2. MARKING (STRIPING) PAINT FOR PARKING SPACES, TRAFFIC ARROWS, ADA PARKING AND SYMBOLS, ETC., PER LOCAL REQUIREMENTS AND AS FOLLOWS:
3. PAVEMENT MARKINGS PAINT SHALL BE WATER BASE FAST DRYING 100% ACRYLIC TYPE: WATER BASE TO MEET FEDERAL SPECIFICATION TTP-01952B. FOR COLD WEATHER APPLICATION PAINT PRODUCT SHALL BE IN ACCORDANCE WITH ASTM-D2369, D1394, D3723, D1475, D562 AND D711.
4. PROVIDE A NON-SLIP AGGREGATE ADDITIVE TO MARKING PAINT USED AT ADA ACCESS RAMPS.
5. APPLY 2 COATS WITHIN THE SAME DAY, UTILIZING STRAIGHT EDGES, YELLOW ON CONCRETE/WHITE ON ASPHALT EXCEPT WHEN MATCHING ADJACENT OR EXISTING COLOR WHEN THE PAVING IS AN EXPANSION OR SEGMENT OF A LARGER LOT.

EXISTING SLAB REINFORCEMENT INVESTIGATION/X-RAY

1. CONTRACTOR SHALL VERIFY POST TENSIONING AND REINFORCEMENT LOCATION IN EXISTING CONCRETE SLAB PRIOR TO DRILLING.

LANDSCAPE NOTES

1. SOD SHALL BE SELECTED PER ZONE AND MATCHED TO EXISTING SITE. SOD SHALL BE A FIRST GRADE CERTIFIED BLEND CONTAINING NO MORE THAN 30 PERCENT OF OTHER GRASSES AND CLOVERS, AND FREE FROM ALL NOXIOUS WEEDS.

   ZONES 3, 4 & 5: APPROVED BLUE GRASS BLEND
   ZONE 6: APPROVED FESCUE BLEND
   ZONES 7 & 8: APPROVED BERMUDA BLEND
   ZONES 9 & 10: APPROVED ST AUGUSTINE FLORATAM BLEND
2. ALL DISTURBED AND PROPOSED LANDSCAPE PLANTING BED AREAS SHALL BE RETURNED TO MATCH EXISTING CONDITIONS.
3. PLANT GUARANTEE: CONTRACTOR SHALL GUARANTEE ALL PLANTS FOR A PERIOD OF ONE (1) YEAR FROM DATE OF PROJECT ACCEPTANCE BY THE OWNER.
4. IRRIGATION RELOCATION: CONTRACTOR FIELD VERIFY IF EXISTING IRRIGATION IS PRESENT, DETERMINE POINT OF CONNECTION, SYSTEM PRESSURE, FIXTURE TYPES, AND POTENTIAL FOR EXPANSION. IF FOUND THAT THE EXISTING IRRIGATION SYSTEM IS CAPABLE OF EXPANSION AND REUSE THEN IT SHALL BE MODIFIED TO PROVIDE 100% COVERAGE OF THE LANDSCAPE AREA. IF THE EXISTING IRRIGATION SYSTEM IS NOT CAPABLE OF EXPANSION, CONTRACTOR TO INSTALL A NEW CONTROLLER, BOOSTER PUMP, AND OTHER APPARATUSES NEEDED FOR A COMPLETE IRRIGATION SYSTEM. IRRIGATED AREAS SHALL BE IRRIGATED BY DRIP IRRIGATION OR SIMILAR FIXTURES BY THE SAME SUPPLIER. CONTRACTOR SHALL ENSURE BUILDING WALLS AND WINDOWS WILL NOT BE DAMAGED OR STAINED BY IMPROPER IRRIGATION INSTALLATION OR POOR SELECTION OF FIXTURES. SYSTEM SHALL INCLUDE ALL SPRINKLER FIXTURES, DRIP TUBING, PIPING, VALVES, WIRING AND CONTROLS TO PROVIDE A COMPLETE FUNCTIONAL SYSTEM THAT SHALL COMPLY WITH CITY CODE. PRIOR TO UPDATING THE IRRIGATION SYSTEM, A CERTIFIED IRRIGATION DESIGNER SHALL PROVIDE SHOP DRAWINGS TO TESLA FOR APPROVAL. UPON APPROVAL OF SHOP DRAWINGS, THE UPDATED IRRIGATION SYSTEM SHALL BE APPROVED BY OWNER FOR FINAL ACCEPTANCE.

EXISTING LEGEND

— P/L —	APPARENT PROPERTY LINE		CATCH BASIN
— R/W —	APPARENT RIGHT OF WAY		CURB INLET
— C/L —	APPARENT CENTERLINE	st	STORM MANHOLE
— WM —	WATER MAIN	sa	SANITARY MANHOLE
— W —	WATER LINE	um	UNKNOWN MANHOLE
— IR —	IRRIGATION LINE	sa	SANITARY VALVE
— GAS —	GAS LINE	sep tnk	SEPTIC TANK
— ST —	STORM LINE		FIRE HYDRANT
— SAN —	SANITARY LINE	w	WATER METER
— OH —	OVERHEAD ELECTRIC	w	WATER VALVE
— E —	ELECTRIC MAIN	i	SPRINKLER HEAD
— UE —	ELECTRIC LINE	w	WATER MANHOLE
— L/P —	LIGHT POLE CONDUIT	g	GAS VALVE
	EXISTING BUILDING	g	GAS METER
	LIGHT POLE	g	GAS MANHOLE
	POWER POLE	gs	GAS SERVICE METER
	POWER/TELEPHONE POLE	t	TELEPHONE PEDESTAL
	LIGHT/TELEPHONE POLE	t	TELEPHONE MANHOLE
	TELEPHONE POLE	tv	CABLE TV PEDESTAL
	POWER/LIGHT POLE		BOLLARD
	POWER/LIGHT/TELE POLE		SIGN
	UNKNOWN POLE		LUMINESCENT SIGN
e	ELECTRIC METER	co	CLEANOUT
e	ELECTRIC MANHOLE		YARD LIGHT
	TRANSFORMER	g pmp	FLAG POLE
e	ELECTRIC PULLBOX	mb	GAS PUMP
			MAIL BOX

GPD GROUP
Professional Corporation
520 South Main Street, Suite 2531
Akron, OH 44311
330.572.2100 Fax 330.572.2101

TESLA
3600 DEER CREEK RD
PALO ALTO, CA 94304
(650) 681-5000

REV.	DATE	DESCRIPTION
A	09.01.22	ISSUED FOR SITE SKETCH REVIEW
B	09.22.22	ISSUED FOR 90% REVIEW
C	10.06.22	SIGNED AND SEALED

LEONARDO A. SFEBRA
NEW MEXICO
24262
PROFESSIONAL ENGINEER
10/06/22

5161 LANG AVE NE
(TESLA SUPERCHARGER)
TRT18975 - ALBUQUERQUE, NM 87109

GENERAL NOTES

ISSUED FOR:	
PERMIT	XXX
BID	XXX
CONSTRUCTION	XXX
RECORD	XXX

INSTALL MANAGER	DESIGNER
BETH SORENSEN	RDV

JOB NO.
2022141.67

GN-1

Drawing Name: O:\2022\2022141\67 - TRT 18975 - Albuquerque, NM - North Journal Center\dwg\2022141.67 - Albuquerque,NM - CD90.dwg
October 6, 2022 2:40 PM - MLogan

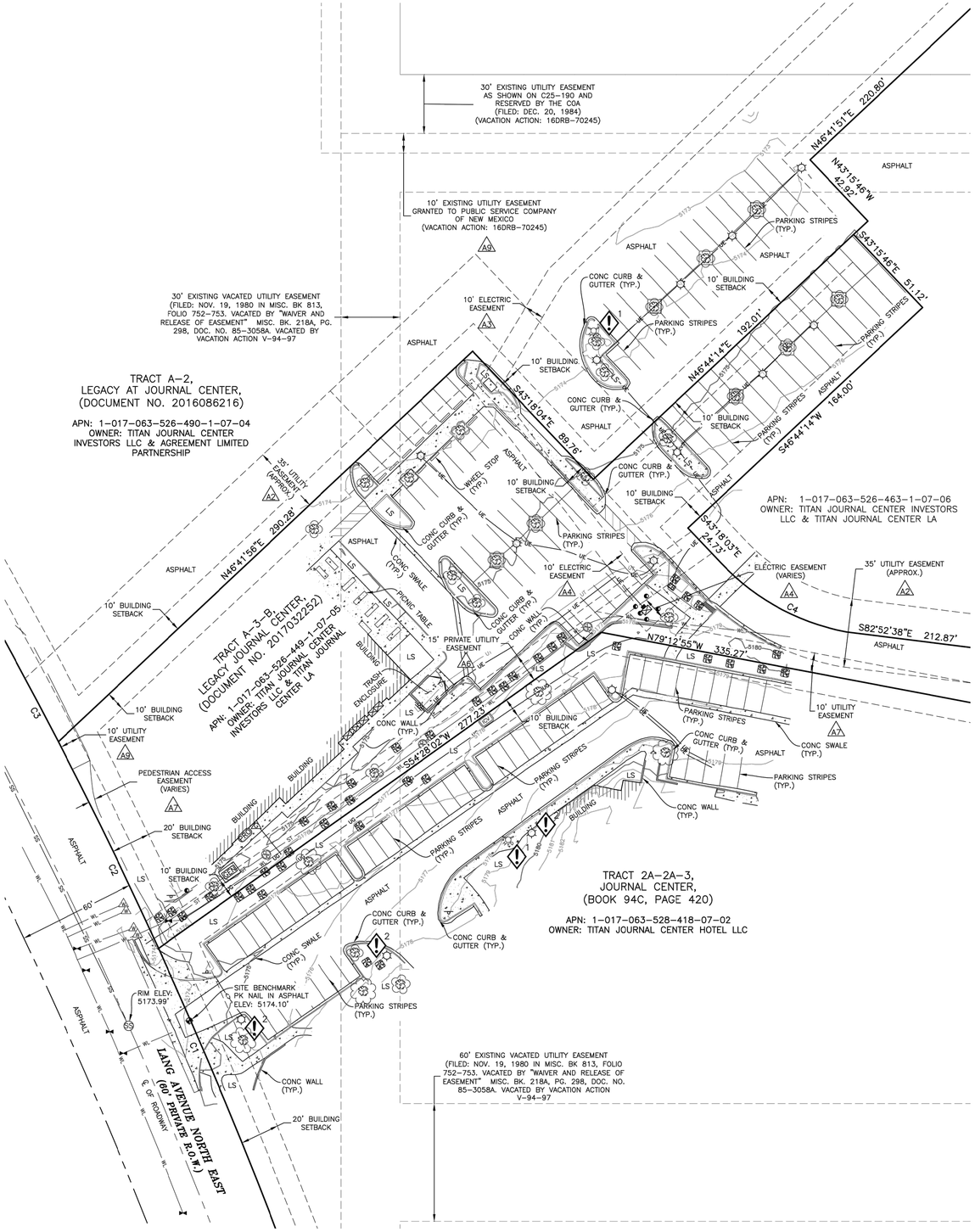

VICINITY MAP

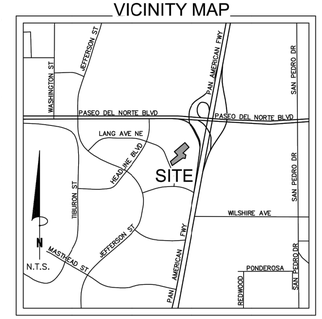

GRAPHIC SCALE

FOR REFERENCE ONLY
- NOT TO SCALE

LEGAL DESCRIPTION (FIRST CORPORATE SOLUTIONS: ORD-953969-Q8W5Y4):

TRACT A-3-B, LEGACY AT JOURNAL CENTER, AS PER PLAT RECORDED ON APRIL 04, 2017 IN DOCUMENT NO. 2017032252, IN THE OFFICIAL PUBLIC RECORDS OF BERNALILLO COUNTY, NEW MEXICO.

PER SPECIAL WARRANTY DEED RECORDED ON JUNE 18, 2015, IN DOCUMENT NO. 2015052292, IN THE OFFICIAL PUBLIC RECORDS OF BERNALILLO COUNTY, NEW MEXICO.

APN: 1-017-063-526-449-1-07-05

SCHEDULE B2 EXCEPTIONS (FIRST CORPORATE SOLUTIONS: ORD-953969-Q8W5Y4):

Item No.

- A1 Permanent Easement 12/18/1990 Document No. 9096239 –IS LOCATED ON THE SURVEY AREA, BLANKET IN NATURE.
- A2 Reciprocal Easement and Operating Agreement 10/07/2016 Document No. 2016095210 –IS LOCATED ON THE SURVEY AREA, BLANKET IN NATURE AND AS SHOWN HEREON.
- A3 Underground Easement 05/09/2017 Document No. 2017043507 –IS LOCATED ON THE SURVEY AREA, AS SHOWN HEREON.
- A4 Underground Easement 08/28/2017 Document No. 2017082878 –IS LOCATED ON THE SURVEY AREA, AS SHOWN HEREON.
- A5 Agreement 06/16/2021 Document No. 2021070890 –IS LOCATED ON THE SURVEY AREA, BLANKET IN NATURE.
- A6 Plat of Tract 04/04/2017 Document No. 2017032252 –IS LOCATED ON THE SURVEY AREA, BLANKET IN NATURE AND AS SHOWN HEREON.
- A7 Plat of Tract 09/09/2016 Document No. 2016086216 –IS LOCATED ON THE SURVEY AREA, BLANKET IN NATURE AND AS SHOWN HEREON.
- A8 Plat of Tract 05/06/2015 Document No. 2015037889 –IS LOCATED ON THE SURVEY AREA, BLANKET IN NATURE.
- A9 Plat of Tract 12/19/1994 Document No. 94146690 –IS LOCATED ON THE SURVEY AREA, BLANKET IN NATURE AND AS SHOWN HEREON.
- A10 Replat of Tract Document No. 85 7199. –IS LOCATED ON THE SURVEY AREA, BLANKET IN NATURE.

Items not listed above are determined non-survey related items and are not plotted hereon.

LEGAL DESCRIPTION (FIRST CORPORATE SOLUTIONS: ORD-953997-N8W1C0):

TRACT A-2, LEGACY AT JOURNAL CENTER, AS PER PLAT RECORDED ON SEPTEMBER 09, 2016 IN BOOK 2016C, PAGE 0112 AS DOCUMENT NO. 2016086216, IN THE OFFICIAL PUBLIC RECORDS OF BERNALILLO COUNTY, NEW MEXICO.

PER WARRANTY DEED RECORDED ON JUNE 16, 2021, IN DOCUMENT NO. 2021070889, IN THE OFFICIAL PUBLIC RECORDS OF BERNALILLO COUNTY, NEW MEXICO.

APN: 1-017-063-526-490-1-07-04

SCHEDULE B2 EXCEPTIONS (FIRST CORPORATE SOLUTIONS: ORD-953997-N8W1C0):

Item No.

- B1 Permanent Easement 12/18/1990 Document No. 9096239 –IS LOCATED ON THE SURVEY AREA, BLANKET IN NATURE.
- B2 Reciprocal Easement and Operating Agreement 10/07/2016 Document No. 2016095210 –IS LOCATED ON THE SURVEY AREA, SHOWN AS EXCEPTION NO. A2 HEREON.
- B3 Underground Easement 05/09/2017 Document No. 2017043508 –IS LOCATED ON THE SURVEY AREA, SHOWN AS EXCEPTION NO. A3 HEREON.
- B4 Agreement 06/16/2021 Document No. 2021070890 –IS LOCATED ON THE SURVEY AREA, BLANKET IN NATURE.
- B5 Plat of Tract 09/09/2016 Document No. 2016086216 –IS LOCATED ON THE SURVEY AREA, BLANKET IN NATURE AND AS SHOWN HEREON AS EXCEPTION A7.
- B6 Plat of Tract 05/06/2015 Document No. 2015037889 –IS LOCATED ON THE SURVEY AREA, BLANKET IN NATURE.
- B7 Plat of Tract 12/19/1994 Document No. 94146690 –IS LOCATED ON THE SURVEY AREA, BLANKET IN NATURE AND AS SHOWN HEREON AS EXCEPTION A9.
- B8 Replat of Tract Document No. 85 7199. –IS LOCATED ON THE SURVEY AREA, BLANKET IN NATURE.

Items not listed above are determined non-survey related items and are not plotted hereon.

LEGAL DESCRIPTION (FIRST CORPORATE SOLUTIONS: ORD-954020-F6W1X3):

TRACT 2A-2A-3, JOURNAL CENTER, AS PER PLAT RECORDED ON DECEMBER 19, 1994 IN PLAT BOOK 94C, PAGE 420, IN THE OFFICIAL PUBLIC RECORDS OF BERNALILLO COUNTY, NEW MEXICO.

PER WARRANTY DEED RECORDED ON APRIL 26, 2017, IN DOCUMENT NO. 2017038903, IN THE OFFICIAL PUBLIC RECORDS OF BERNALILLO COUNTY, NEW MEXICO.

APN: 1-017-063-528-418-07-02

SCHEDULE B2 EXCEPTIONS (FIRST CORPORATE SOLUTIONS: ORD-954020-F6W1X3):

Item No.

- C1 Permanent Easement 12/18/1990 Document No. 9096239 –IS LOCATED ON THE SURVEY AREA, BLANKET IN NATURE.
- C2 Permanent Easement 03/13/1996 Document No. 96028551 –IS NOT LOCATED ON THE SURVEY AREA.
- C3 Underground Easement 06/25/1996 Document No. 96070322 –IS NOT LOCATED ON THE SURVEY AREA.
- C4 Grant of Easement 12/20/2010 Document No. 2010130035 –IS LOCATED ON THE SURVEY AREA, NO MATHEMATICAL DESCRIPTION.
- C5 Plat of Tract 12/19/1994 Document No. 94146690 –IS LOCATED ON THE SURVEY AREA, BLANKET IN NATURE AND AS SHOWN HEREON AS EXCEPTION A9.
- C6 Replat of Tract Document No. 85 7199 –IS LOCATED ON THE SURVEY AREA, BLANKET IN NATURE.

Items not listed above are determined non-survey related items and are not plotted hereon.

LEGEND

- SITE BENCHMARK
- STORM CLEANOUT
- SANITARY MANHOLE
- FIRE HYDRANT
- WATER VALVE
- WATER METER
- IRRIGATION CONTROL VALVE
- ELECTRIC BOX
- LIGHT POLE
- ELECTRIC TRANSFORMER
- ELECTRIC CABINET
- GENERATOR
- GAS METER
- PROPANE TANK
- DECIDUOUS TREE
- SHRUB
- LS LANDSCAPED AREA
- BOLLARD
- SIGN
- FENCE GATE
- ST STORM LINE (UNDERGROUND)
- SS SANITARY LINE (UNDERGROUND)
- WL WATER LINE (UNDERGROUND)
- UG GAS LINE (UNDERGROUND)
- IRON FENCE
- TREE DRIP EDGE
- TRUNCATED DOMES
- CONCRETE AREA
- X EXCEPTION NUMBER
- X AREA OF CONCERN

NOTES:

1. This is a topographic map. This is not a boundary survey and is only intended to depict those topographic features or improvements shown. The property lines shown are record lines only and are shown for graphical reference only.
2. Any underground utilities shown have been located from field survey information. The surveyor makes no guarantee that the underground utilities shown comprise all such utilities in the area, either in service or abandoned. The surveyor further does not warrant that the underground utilities shown are in the exact location indicated although he does certify that they are located as accurately as possible from the information available. This site was located by standard RF and ground penetrating methods.
3. FEDERAL EMERGENCY MANAGEMENT AGENCY, FEMA FIRMette published May 31, 2022, referencing Flood Insurance Rate Map, Map Number 35001C0137H effective date August 16, 2012, indicates this parcel of land is located in Zone X (Area of minimal flood hazard).
4. This survey does not constitute a title search by Clark Land Surveying, Inc. to determine ownership or easements of record. For all information regarding easements, rights of way and title of record, Clark Land Surveying, Inc. relied upon a Service Report, prepared by First Corporate Solutions with an order number of ORD-953969-Q8W5YA, dated May 31, 2022, ORD-953997-N8W1C0, dated May 31, 2022, and ORD-954020-F6W1X3, dated May 31, 2022.
5. Elevations are based on NAVD 88 datum.
6. BENCHMARK: PK nail in asphalt, as shown. Elevation: 5174.10' (NAVD 88).
7. BASIS OF BEARINGS: Based upon New Mexico Central State Plane Coordinate System, NAD 83.
8. Field work for this survey was completed on May 31, 2022.
9. The owner names and tax parcel data shown hereon are based upon the public records available at the original date of this survey. Current ownership and tax parcel data should be verified for accuracy.
10. This site is zoned "NR-BP" (Non-Residential – Business Park) per City of Albuquerque Planning Department.
    Building Setbacks:
    Front: 20', Side: 10', Rear: 10'
    No zoning information provided by the client. Any Zoning setbacks shown hereon are the interpretation of the surveyor. For clarification of exact zoning designations and setback locations, please, contact the City of Albuquerque Planning and Department at 505-924-3860.

AREAS OF CONCERN:

1. Location of underground water line indeterminate.
2. Location of underground electric line indeterminate.

Surveyor can revise underground utilities shown hereon; if provided with as-built drawings, or utility maps.

SURVEYOR'S STATEMENT:

On the basis of my knowledge, information and belief, I hereby state and declare that this drawing was prepared under my direct supervision to the standard of care of surveyors practicing in the State of New Mexico. and that the information shown hereon is true and correct to the best of my knowledge and belief.

This statement is neither a warranty nor a guarantee, either expressed or implied.

DAVID P. ACOSTA NEW MEXICO 21082 PROFESSIONAL SURVEYOR

06/20/2022

David P. Acosta
New Mexico. Professional Land Surveyor No. 21082
For and on behalf of Clark Land Surveying, Inc.

CURVE	RADIUS	ARC LENGTH	DELTA ANGLE	RADIAL BEARING
C1	2441.90'	235.35'	5°31'20"	S71°01'52"W
C2	2441.93'	117.10'	2°44'51"	S65°30'34"W
C3	2441.93'	154.44'	3°37'25"	S62°45'42"W
C4	118.00'	73.94'	35°54'04"	N46°42'01"E

Clark Land Surveying, Inc
177 S. Tiffany Dr. • Pueblo West, Co. 81007 • 719.633.8533
www.clarkls.com

No.	Revisions Description	By	Date

SITE NAME:
Albuquerque, NM - Lang Ave NE

ENGINEERING DESIGN SURVEY

A PORTION OF THE PROPERTY SITUATED ALONG THE INTERSECTION OF THE NE CORNER OF LANG AVENUE AND JOURNAL CENTER BLVD, CITY OF ALBUQUERQUE, BERNALILLO COUNTY, STATE OF NEW MEXICO.

Project No. 221333

Drawn By: MEB
Checked By: DPA

Date: 06/18/2022
Sheet 1 of 1

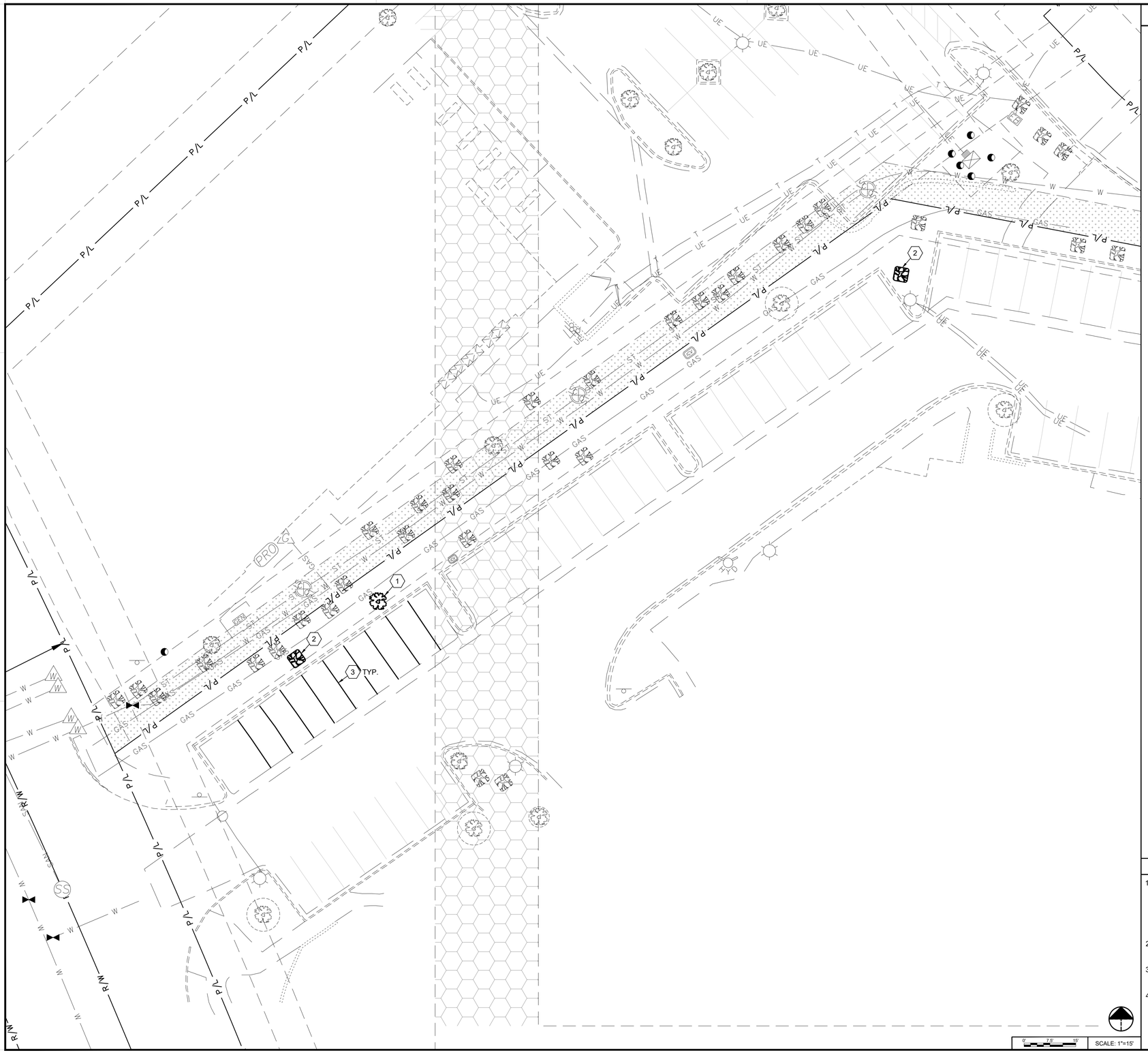

DEMOLITION KEYNOTES AND LEGEND (#)

1. EXISTING TREE TO BE REMOVED. CONTRACTOR SHALL VERIFY EXACT SIZE AND TYPE IN FIELD.
2. EXISTING LANDSCAPING TO BE REMOVED (SHRUB, PERENNIALS, GROUNDCOVER, ETC.). CONTRACTOR SHALL VERIFY EXACT SIZE AND TYPE IN FIELD.
3. EXISTING PAVEMENT MARKINGS TO BE REMOVED. CONTRACTOR SHALL REMOVE MARKINGS WITH SMALL HANDHELD GRINDERS, SCARIFIERS, BEAD BLASTING, SAND BLASTING, WATER BLASTING OR OTHER METHODS, WITH THE APPROVAL OF THE ENGINEER OF RECORD. TAKE CARE DURING MARKING REMOVAL TO NOT SCAR, DISCOLOR, OR OTHERWISE DAMAGE THE PAVEMENT SURFACE. DO NOT OVER PAINT OR USE OTHER METHODS OF COVERING MARKINGS IN LIEU OF REMOVAL. WATER BLASTING METHOD SHALL NOT BE USED DURING FREEZING WEATHER CONDITIONS.

XX L.F.± — DENOTES LIMITS OF SAWCUT

30' EXISTING VACATED UTILITY EASEMENT

10' EXISTING UTILITY EASEMENT

GENERAL SHEET NOTES

1. CONTRACTOR SHALL REMOVE EXISTING PAVEMENT AND/OR CURB USING CLEAN SAWCUTS TO INSTALL PROPOSED UNDERGROUND CONDUITS AND REPLACE PAVEMENT AND/OR CURB AFTER CONDUITS HAVE BEEN INSTALLED. SEE ELECTRICAL SHEETS FOR CONDUIT ROUTING, APPROXIMATE CONDUIT RUN LENGTHS AND TRENCH DETAIL. CONTRACTOR SHALL MEET OR EXCEED EXISTING PAVEMENT COMPOSITION AND THICKNESS. NOTIFY TESLA OF ANY DISCREPANCIES PRIOR TO PERFORMING WORK.
2. APPLY LIQUID ASPHALT AT ALL JOINTS BETWEEN CONCRETE AND ASPHALT AND WHERE PROPOSED ASPHALT MEETS EXISTING, INCLUDING SAW CUT JOINTS.
3. FOR TRAFFIC CONTROL PROCEDURES (IF APPLICABLE), SEE TRAFFIC CONTROL NOTES ON SHEET GN-1.
4. PROPERTY LINE AND RIGHT-OF-WAY BOUNDARIES ARE SHOWN FOR REFERENCE ONLY. REFER TO SURVEY BY CLARK LAND SURVEYING, INC, DATED 06/18/2022 FOR EXACT LOCATION.

GPD GROUP
Professional Corporation
520 South Main Street, Suite 2531
Akron, OH 44311
330.572.2100 Fax 330.572.2101

TESLA

3600 DEER CREEK RD
PALO ALTO, CA 94304
(650) 681-5000

REV.	DATE	DESCRIPTION
A	09.01.22	ISSUED FOR SITE SKETCH REVIEW
B	09.22.22	ISSUED FOR 90% REVIEW
C	10.06.22	SIGNED AND SEALED

LEONARDO A. SFERRA
NEW MEXICO
24262
PROFESSIONAL ENGINEER
10/06/22

5161 LANG AVE NE
(TESLA SUPERCHARGER)
TRT18975 - ALBUQUERQUE, NM 87109

DEMOLITION PLAN

ISSUED FOR:	
PERMIT	XXX
BID	XXX
CONSTRUCTION	XXX
RECORD	XXX

INSTALL MANAGER	DESIGNER
BETH SORENSEN	RDV

JOB NO.
2022141.67

C-1

Drawing Name: O:\2022\2022141\67 - TRT 18975 - Albuquerque, NM - North Journal Center\dwg\2022141.67 - Albuquerque,NM - CD90.dwg
October 6, 2022 2:40 PM - MLogan

CHARGING STALL DETAILS

SIGNAGE SCHEDULE

CABINET #	POST #	SIGN TYPE
1	1A	D
	1B	D
	1C	D
	1D	D
2	2A	D
	2B	D
	2C	D
	2D	V

PARKING STALL ANALYSIS

EXISTING STANDARD STALLS UTILIZED AS A RESULT OF THIS PROJECT	10
PROPOSED TESLA STALLS	8
PROPOSED STANDARD STALLS	0
NET STALL COUNT	-2

D

V

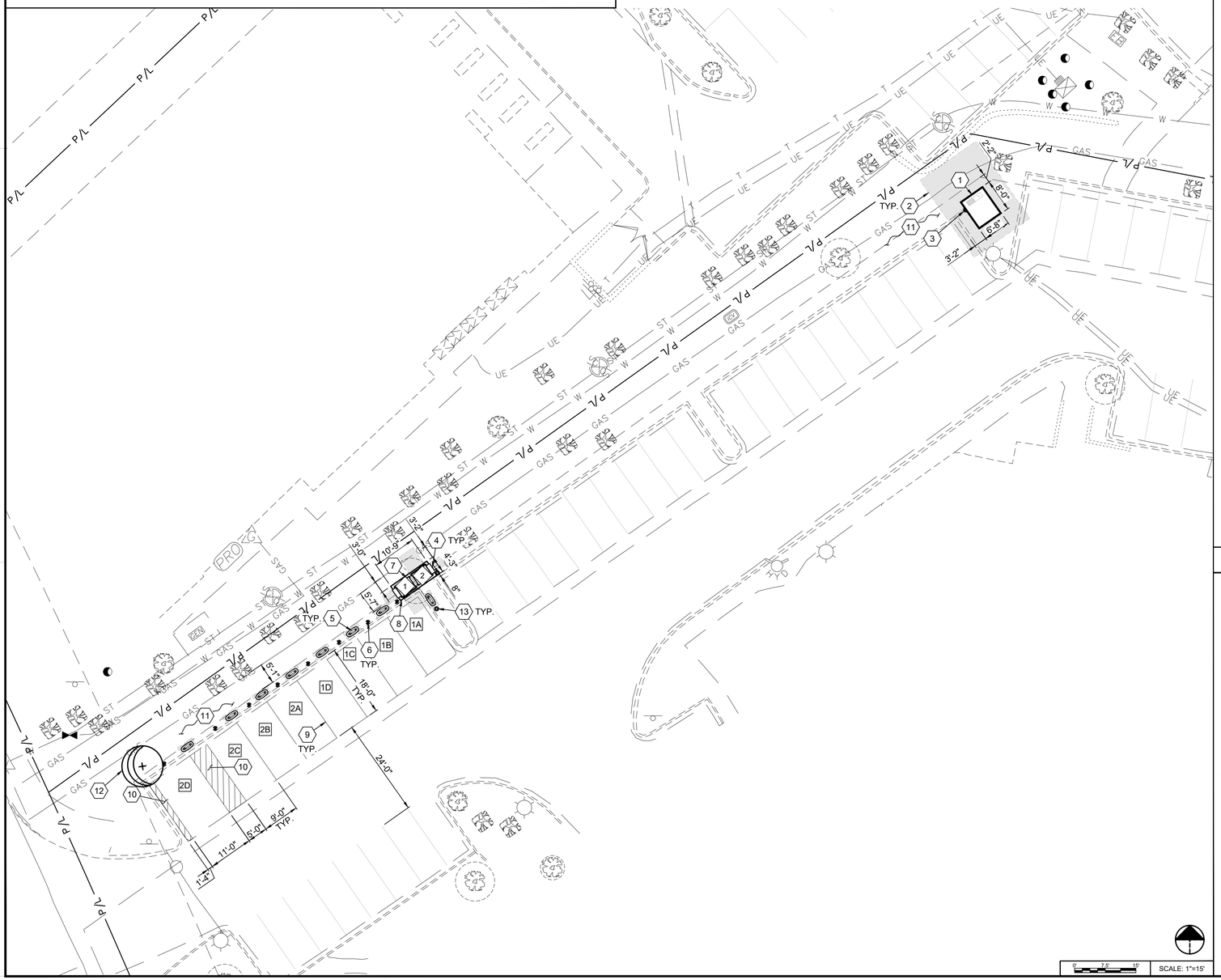

CONSTRUCTION KEYNOTES AND LEGEND (#)

1. PROPOSED PAD MOUNTED ELECTRICAL UTILITY TRANSFORMER (BY UTILITY). CONTRACTOR SHALL PROVIDE CONCRETE PAD PER UTILITY SPECIFICATIONS. COORDINATE FINAL LOCATION WITH UTILITY. SEE ELECTRICAL PLANS FOR PROPOSED ROUTING.
2. PROPOSED EQUIPMENT CLEAR SPACE (TYPICAL).
3. PROPOSED ELECTRIC METER MOUNTED TO TRANSFORMER PER ELECTRIC COMPANY SPECIFICATIONS AND DETAILS ON ELECTRICAL SHEETS.
4. PROPOSED SERVICE ENTRANCE DISCONNECTS MOUNTED TO THE SIDE OF EACH CHARGING CABINET (TOTAL OF 2). SEE ELECTRICAL SHEETS FOR SPECIFICATIONS OF EACH.
5. PROPOSED TESLA CHARGE POST WITH INDIVIDUAL PRECAST CONCRETE FOUNDATION (TYPICAL OF 8). SEE DETAILS ON SHEET C-3.
6. PROPOSED TESLA NON-ILLUMINATED PARKING SIGN MOUNTED ON BOLLARD (TYPICAL OF 8). SEE DETAILS ON SHEET C-4. SEE CHARGING POST SCHEDULE THIS SHEET FOR SIGN TYPE.
7. PROPOSED TESLA CHARGING CABINET (TYPICAL OF 2). SEE DETAILS ON SHEETS C-3.
8. PROPOSED CONCRETE PAD. SEE DETAIL ON SHEET C-3.
9. PROPOSED PAINTED 4" WIDE SOLID WHITE STRIPE. SEE PAVEMENT MARKING NOTES ON SHEET GN-1.
10. PROPOSED PAINTED 4" WIDE WHITE TRANSVERSE STRIPING. STRIPING SHALL BE 3'-0" O.C. SEE PAVEMENT MARKING NOTES ON SHEET GN-1 AND DETAIL ON SHEET C-3.
11. ALL DISTURBED AREAS NOT TO BE PAVED SHALL BE RESTORED TO MATCH PER LANDSCAPE/IRRIGATION NOTES ON SHEET GN-1.
12. PROPOSED TREE TO MATCH EXISTING IN SIZE AND TYPE (TYPICAL OF 1). SEE DETAIL ON SHEET C-3.
13. PROPOSED DETERRENT BOLLARD (TYPICAL OF 2). SEE DETAILS ON SHEET C-3.

GENERAL SHEET NOTES

1. CONTRACTOR SHALL REMOVE EXISTING PAVEMENT AND/OR CURB USING CLEAN SAWCUTS TO INSTALL PROPOSED UNDERGROUND CONDUITS AND REPLACE PAVEMENT AND/OR CURB AFTER CONDUITS HAVE BEEN INSTALLED. SEE ELECTRICAL SHEETS FOR CONDUIT ROUTING, APPROXIMATE CONDUIT RUN LENGTHS AND TRENCH DETAIL. CONTRACTOR SHALL MEET OR EXCEED EXISTING PAVEMENT COMPOSITION AND THICKNESS. NOTIFY TESLA OF ANY DISCREPANCIES PRIOR TO PERFORMING WORK.
2. APPLY LIQUID ASPHALT AT ALL JOINTS BETWEEN CONCRETE AND ASPHALT AND WHERE PROPOSED ASPHALT MEETS EXISTING, INCLUDING SAW CUT JOINTS.
3. PROPERTY LINE AND RIGHT-OF-WAY BOUNDARIES ARE SHOWN FOR REFERENCE ONLY. REFER TO SURVEY OR DESIGN DRAWINGS BY CLARK LAND SURVEYING, INC, DATED 06/18/2022 FOR EXACT LOCATION.
4. SEE CLARK SURVEY FOR ALL APPLICABLE BENCHMARKS.
5. THE CONTRACTOR SHALL FIELD VERIFY ALL EXISTING SLOPES AND GRADES PRIOR TO CONSTRUCTION. FINAL GRADES SHALL BE DETERMINED IN FIELD BY THE CONTRACTOR AND APPROVED BY THE CONSTRUCTION MANAGER.
6. THE CONTRACTOR SHALL ENSURE POSITIVE DRAINAGE TOWARDS THE NEAREST EXISTING DRAINAGE STRUCTURE AND ENSURE NO PONDING OCCURS ON SITE.
7. CONTRACTOR SHALL ENSURE SLOPES OF PARKING STALL 2D AND ADJACENT TRANSVERSE STRIPED AREA CONFORM WITH ADA SLOPE REQUIREMENTS. NO SLOPE SHALL EXCEED 2% IN ANY DIRECTION WITHIN PARKING STALL 2D AND ADJACENT TRANSVERSE STRIPED AREA. CONTRACTOR SHALL REMOVE AND RE-GRADE PAVEMENT AS REQUIRED TO ACHIEVE NECESSARY SLOPES PER AHJ ACCESSIBILITY REGULATIONS. CONTRACTOR SHALL INSTALL FINAL PAVEMENT MARKINGS IN ACCORDANCE WITH THE CURRENT AHJ'S REGULATIONS.

GPD GROUP
Professional Corporation
520 South Main Street, Suite 2531
Akron, OH 44311
330.572.2100 Fax 330.572.2101

TESLA

3600 DEER CREEK RD
PALO ALTO, CA 94304
(650) 681-5000

REV.	DATE	DESCRIPTION
A	09.01.22	ISSUED FOR SITE SKETCH REVIEW
B	09.22.22	ISSUED FOR 90% REVIEW
C	10.06.22	SIGNED AND SEALED

LEONARDO A. SPESSA
NEW MEXICO
24262
PROFESSIONAL ENGINEER
10/06/22

5161 LANG AVE NE
(TESLA SUPERCHARGER)
TRT18975 - ALBUQUERQUE, NM 87109

SITE PLAN

ISSUED FOR:	
PERMIT	XXX
BID	XXX
CONSTRUCTION	XXX
RECORD	XXX

INSTALL MANAGER	DESIGNER
BETH SORENSEN	RDV

JOB NO.
2022141.67

C-2

Drawing Name: O:\2022\2022141\67 - TRT 18975 - Albuquerque, NM - North Journal Center\dwg\2022141.67 - Albuquerque,NM - CD90.dwg
October 6, 2022 2:40 PM - MLogan

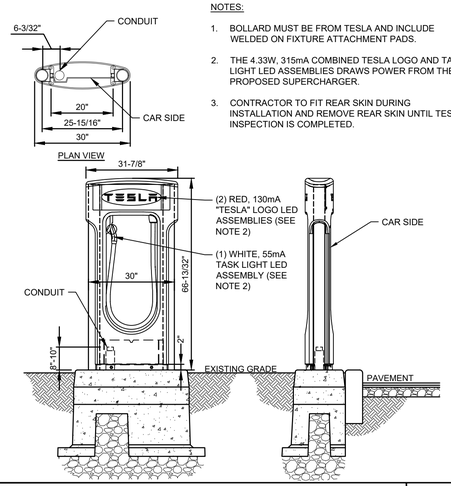

NOTES:

1. BOLLARD MUST BE FROM TESLA AND INCLUDE WELDED ON FIXTURE ATTACHMENT PADS.
2. THE 4.33W, 315mA COMBINED TESLA LOGO AND TASK LIGHT LED ASSEMBLIES DRAWS POWER FROM THE PROPOSED SUPERCHARGER.
3. CONTRACTOR TO FIT REAR SKIN DURING INSTALLATION AND REMOVE REAR SKIN UNTIL TESLA INSPECTION IS COMPLETED.

TESLA SUPERCHARGING POST FOUNDATION | N.T.S | 11

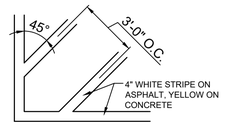

NOTES:
1. REFER TO PAVEMENT MARKING NOTES ON SHEET GN-1 FOR ADDITIONAL SPECIFICATIONS.

TRANSVERSE STRIPING DETAIL | N.T.S | 7

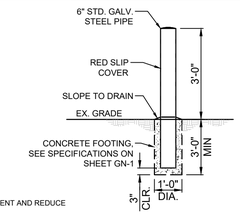

NOTE:

DETERRENT BOLLARD IS INTENDED TO PROVIDE A VISUAL DETERRENT AND REDUCE POTENTIAL IMPACT ON EQUIPMENT.

DETERRENT BOLLARD DETAIL | N.T.S | 8

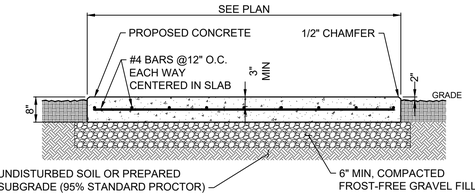

CONCRETE PAD NOTES & CONCRETE SPECIFICATIONS:

1. FOUNDATION AREA SHALL BE EXCAVATED TO THE DEPTH AND DIMENSIONS SHOWN ON THE PLANS. OTHER UNSUITABLE MATERIAL SHALL BE REMOVED AND LEGALLY DISPOSED OF OFF-SITE. THE SUBGRADE SHALL BE ROLLED WITH A 1-TON, VIBRATORY, WALK-BEHIND ROLLER AT A SPEED OF LESS THAN 2 FPS, 6 PASSES MINIMUM, TO PROVIDE UNYIELDING SURFACE.
2. UNDERCUT SOFT OR "WEAVING" AREAS A MINIMUM OF 12 INCHES DEEP. BACKFILL UNDERCUT AREA WITH FILL MEETING THE SPECIFICATIONS OF STRUCTURAL FILL.
3. CONCRETE TO HAVE A MINIMUM 28 DAY COMPRESSIVE STRENGTH (f'c)=4500 psi.
4. REINFORCING BAR TO BE ASTM A615 GRADE 60.
5. ALL REINFORCING TO HAVE MINIMUM CONCRETE COVER PER ACI SPECIFICATIONS.
6. ALL CONCRETE MATERIALS AND WORKMANSHIP SHALL CONFORM TO ACI 318-14 AND APPLICABLE STATE BUILDING CODE.
7. PAD SHALL BE A MINIMUM OF 8" IN THICKNESS. THICKNESS OF PAD SHALL INCREASE AS THE PERIMETER SOIL SURFACE SLOPES TO MAINTAIN A MINIMUM OF 6" OF SOIL COVER TO THE BOTTOM OF THE PAD.

CONCRETE PAD DETAIL | N.T.S | 4

NOTE:
1. TESLA PROVIDED TEMPLATE PLATE TO BE USED TO LAYOUT CHARGING CABINET ANCHORING BOLT LOCATIONS AND CONDUIT STUB UP LOCATIONS.
2. BOLT HOLES FOR REFERENCE ONLY.
3. USE DOTTIE DUCT SEAL COMPOUND PC 6130 (CAT NO LHD1) TO SEAL ENDS OF CONDUIT (TYP. ALL CONDUITS FOR CHARGING CABINETS AND CHARGE POSTS)
4. USE BELL FITTINGS ON ALL AC AND DC CONDUIT STUBS
5. SEE DETAIL THIS SHEET FOR FOUNDATION DETAIL IF APPLICABLE

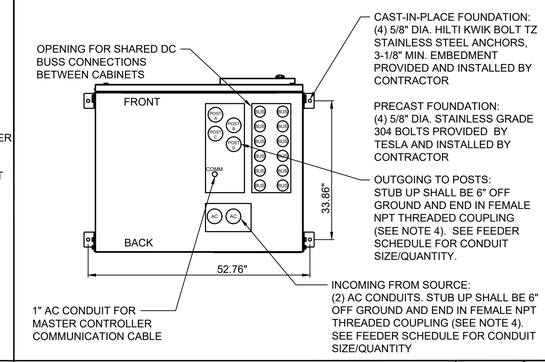

TESLA CHARGING CABINET ANCHOR BOLT PLAN | N.T.S | 1

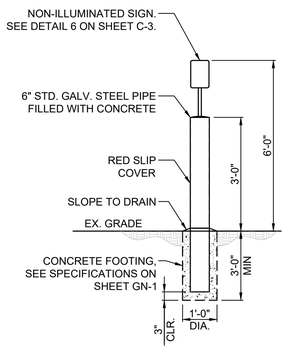

NOTE:

DETERRENT BOLLARD IS INTENDED TO PROVIDE A VISUAL DETERRENT AND REDUCE POTENTIAL IMPACT ON EQUIPMENT.

DETERRENT BOLLARD WITH SIGN DETAIL | N.T.S | 12

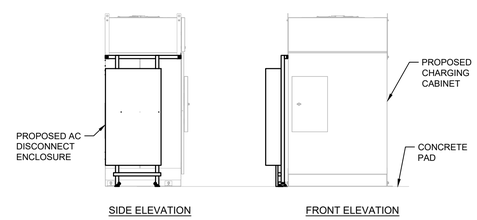

NOTES:
1. CONTRACTOR TO VERIFY LATEST MOUNT DESIGN AND SPECIFICATIONS WITH TESLA INSTALLATION GUIDE PRIOR TO CONSTRUCTION.

AC DISCONNECT ENCLOSURE MOUNTED TO CABINET DETAIL | N.T.S | 9

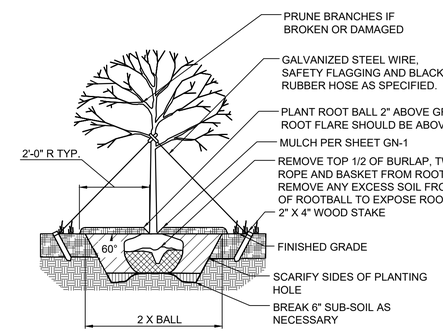

GENERAL NOTES:

WHEN BACKFILLING PLANT PIT, PLACE PLANTING SOIL IN TWO LIFTS. AFTER FIRST LIFT, PUDDLE SOIL IN WITH WATER TO REMOVE ALL AIR POCKETS. PLACE SECOND LIFT AND REPEAT. CONTINUE TO PUDDLE AND FILL AS NECESSARY.

TREE PLANTING DETAIL | N.T.S | 5

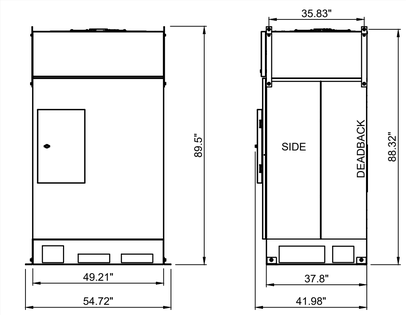

TESLA CHARGING CABINET

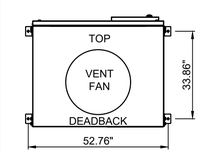

ENCLOSURE: INGRESS PROTECTION IP66
WEIGHT: 1110 kg, 2448 lbs.
COMPLIANCE: UL 2202

NOTES:
1. CABINET SHOULD BE LIFTED USING ROOF MOUNTED EYE HOOKS. A FORKLIFT OR PALLET JACK CAN ALSO BE USED TO MOVE CABINET IF DONE PROPERLY.
2. VERIFY CABINET PART# AND ASSOCIATED DIMENSIONS PRIOR TO CONSTRUCTION

TESLA CHARGING CABINET DIMENSIONS | N.T.S | 2

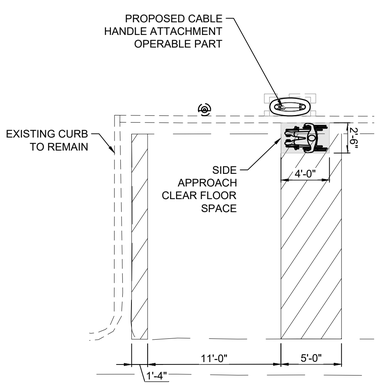

ACCESSIBLE SIDE REACH PLAN | N.T.S | 13

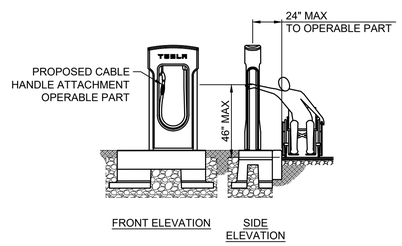

THIS ELEVATION IS A REFERENCE TO THE 2010 ADA STANDARDS FOR ACCESSIBLE DESIGN; SEE SECTION 308, FIGURE 308.3.2(b), OBSTRUCTED SIDE REACH, 46" MAX REACH HEIGHT.

ACCESSIBLE SIDE REACH ELEVATION | N.T.S | 10

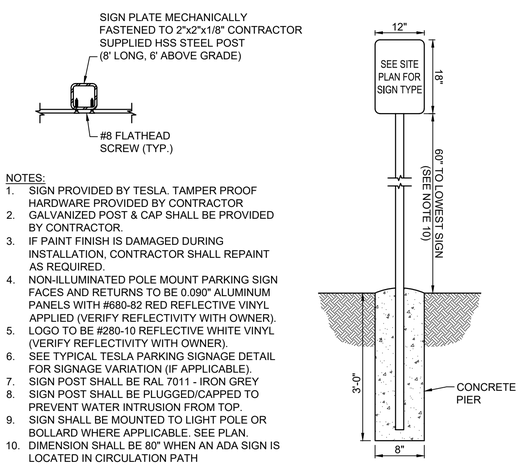

NOTES:
1. SIGN PROVIDED BY TESLA. TAMPER PROOF HARDWARE PROVIDED BY CONTRACTOR
2. GALVANIZED POST & CAP SHALL BE PROVIDED BY CONTRACTOR.
3. IF PAINT FINISH IS DAMAGED DURING INSTALLATION, CONTRACTOR SHALL REPAINT AS REQUIRED.
4. NON-ILLUMINATED POLE MOUNT PARKING SIGN FACES AND RETURNS TO BE 0.090" ALUMINUM PANELS WITH #680-82 RED REFLECTIVE VINYL APPLIED (VERIFY REFLECTIVITY WITH OWNER).
5. LOGO TO BE #280-10 REFLECTIVE WHITE VINYL (VERIFY REFLECTIVITY WITH OWNER).
6. SEE TYPICAL TESLA PARKING SIGNAGE DETAIL FOR SIGNAGE VARIATION (IF APPLICABLE).
7. SIGN POST SHALL BE RAL 7011 - IRON GREY
8. SIGN POST SHALL BE PLUGGED/CAPPED TO PREVENT WATER INTRUSION FROM TOP.
9. SIGN SHALL BE MOUNTED TO LIGHT POLE OR BOLLARD WHERE APPLICABLE. SEE PLAN.
10. DIMENSION SHALL BE 80" WHEN AN ADA SIGN IS LOCATED IN CIRCULATION PATH

TYPICAL PARKING SIGN DETAIL | N.T.S | 6

NOTES:

1. CHARGING CABINET SHALL BE ANCHORED TO CAST-IN-PLACE FOUNDATION WITH (4) 5/8" DIA. HILTI KWIK BOLT TZ STAINLESS STEEL ANCHORS, 3-1/8" MIN. EMBEDMENT. PROVIDED AND INSTALLED BY CONTRACTOR. PROVIDE 8" MIN. EDGE DISTANCE AND 8" MIN. BOLT SPACING.
2. CHARGING CABINET BASE TEMPLATE SHOWN FOR REFERENCE ONLY. CONTRACTOR SHALL COORDINATE WITH TESLA FOR EXACT DIMENSIONS AND SPECIFICATIONS.

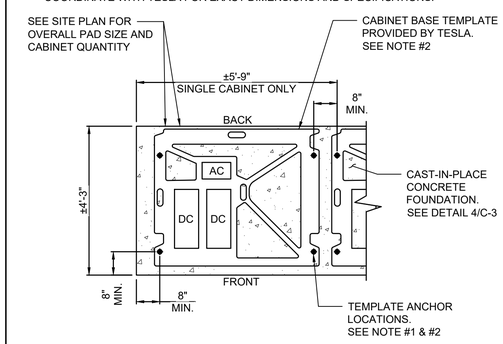

PLAN VIEW

CHARGING CABINET FOUNDATION TEMPLATE DETAIL | N.T.S | 3

GPD GROUP
Professional Corporation
520 South Main Street, Suite 2531
Akron, OH 44311
330.572.2100 Fax 330.572.2101

TESLA
3600 DEER CREEK RD
PALO ALTO, CA 94304
(650) 681-5000

REV.	DATE	DESCRIPTION
A	09.01.22	ISSUED FOR SITE SKETCH REVIEW
B	09.22.22	ISSUED FOR 90% REVIEW
C	10.06.22	SIGNED AND SEALED

LEONARDO A. SIERRA
NEW MEXICO
24262
PROFESSIONAL ENGINEER
10/06/22

5161 LANG AVE NE
(TESLA SUPERCHARGER)
TRT18975 - ALBUQUERQUE, NM 87109

CIVIL DETAILS

ISSUED FOR:	
PERMIT	XXX
BID	XXX
CONSTRUCTION	XXX
RECORD	XXX

INSTALL MANAGER	DESIGNER
BETH SORENSEN	RDV

JOB NO.
2022141.67

C-3

Drawing Name: O:\2022\2022141\67 - TRT 18975 - Albuquerque, NM - North Journal Center\dwg\2022141.67 - Albuquerque.NM - CD\90 Plans.dwg
October 6, 2022 2:40 PM - MLogan

GENERAL ELECTRICAL SPECIFICATIONS

1. THE FOLLOWING ARE ABBREVIATED SPECIFICATIONS. ALL ITEMS NECESSARY FOR A COMPLETE AND OPERABLE JOB (TO THE SATISFACTION OF OWNER) WHETHER SHOWN OR IMPLIED SHALL BE HELD AS THE RESPONSIBILITY OF THE CONTRACTOR

2. IMPORTANT NOTE: "CONTRACTOR" REFERENCED IN THESE SPECIFICATIONS SHALL INDICATE WORK BY ELECTRICAL CONTRACTOR OR ANY OF HIS SUBCONTRACTORS UNLESS NOTED OTHERWISE.

3. DRAWINGS ARE DIAGRAMMATIC AND INDICATE GENERAL ARRANGEMENT ONLY. COORDINATE INSTALLATION WITH OTHER TRADES TO VERIFY THE ACTUAL SPACE CONDITIONS THAT ARE TO BE MAINTAINED. NO ADDITIONAL PAYMENT WILL BE APPROVED FOR FAILURE TO COMPLY.

4. ALL SYMBOLS AND ABBREVIATIONS USED ON THE DRAWINGS ARE CONSIDERED CONSTRUCTION STANDARDS. IF THE CONTRACTOR HAS QUESTIONS REGARDING THEIR EXACT MEANING, THE ENGINEER SHALL BE NOTIFIED FOR CLARIFICATION BEFORE PROCEEDING WITH THE WORK.

5. CONTRACTOR SHALL NOT SCALE ELECTRICAL DRAWINGS. REFER TO SITE PLANS AND ELEVATIONS FOR EXACT LOCATIONS OF ALL EQUIPMENT AND CONFIRM WITH CONSTRUCTION MANAGER ANY SIZES AND LOCATIONS WHEN NEEDED.

6. CONTRACTOR'S SCOPE OF WORK SHALL INCLUDE ALL ITEMS DEFINED IN THE CONTRACT DOCUMENTS. THE CONTRACT DOCUMENTS INCLUDE, BUT ARE NOT LIMITED TO THE FOLLOWING: THE CONTRACT, SPECIFICATIONS, AND CONSTRUCTION DRAWINGS. CONTRACTOR SHALL PROVIDE ALL LABOR, MATERIAL, AND EQUIPMENT NECESSARY TO INSTALL ALL ELECTRICAL EQUIPMENT, CONDUIT, WIRING ETC. AS SHOWN OR IMPLIED ON THE DRAWINGS AND TO PROVIDE A COMPLETE OPERATIVE SYSTEM TO THE SATISFACTION OF OWNER.

7. CONTRACTOR SHALL PROVIDE ON-SITE SUPERVISION AT ALL TIMES WHILE THE WORK IS BEING PERFORMED AND SHALL DIRECT ALL WORK, USING HIS BEST SKILL AND ATTENTION. HE SHALL BE SOLELY RESPONSIBLE FOR ALL CONSTRUCTION MEANS, METHODS, TECHNIQUES, PROCEDURES AND SEQUENCES FOR COORDINATING ALL PORTIONS OF THE WORK UNDER THE CONTRACT.

8. INSTALLATION OF ALL ELECTRICAL EQUIPMENT, DEVICES, CONDUITS, ETC. MUST BE COORDINATED WITH ALL OTHER TRADES. COORDINATE SHUTDOWN TIMES AND WORKING HOURS WITH BUILDING OWNER, INCLUDING OFF HOURS, WEEKEND, AND HOLIDAY WORK AS REQUIRED.

9. ANY DISCREPANCIES FOUND WITHIN THE CONTRACT DOCUMENTS SHALL BE REPORTED TO THE OWNER IN WRITING PRIOR TO THE AWARD OF THE CONTRACT AND AN ADDENDUM WILL BE ISSUED TO COVER SAME.

10. GUARANTEE - CONTRACTOR SHALL FURNISH OWNER WITH A WRITTEN GUARANTEE TO PROMPTLY REMEDY ALL DEFECTS OF WORK OR MATERIALS WITHOUT CHARGE FOR A PERIOD OF ONE YEAR AFTER FINAL ACCEPTANCE AND INSPECTION.

11. MATERIALS - ALL MATERIALS AND EQUIPMENT SHALL BE NEW, IN ORIGINAL CONTAINERS/WRAPPINGS, SHALL BE SPECIFICATION GRADE, AND LABELED OR LISTED BY U.L. OR AN ACCREDITED TESTING ORGANIZATION AS REQUIRED BY LOCAL INSPECTORS.

12. CONTRACTOR SHALL PROVIDE ADEQUATE AND REQUIRED LIABILITY INSURANCE FOR PROTECTION AGAINST PUBLIC LOSS AND ANY/ALL PROPERTY DAMAGE FOR THE DURATION OF WORK

13. ALL EQUIPMENT SHALL BE DESIGNED TO OPERATE ON VOLTAGE AND PHASE SPECIFIED. CONTRACTOR FURNISHING EQUIPMENT OTHER THAN INDICATED SHALL BE RESPONSIBLE FOR ANY CHANGES IN CONDUCTORS, RACEWAYS, SWITCHES, MAIN FEEDERS, AND APPURTENANCES AND PAY ALL ASSOCIATED COSTS. REQUIREMENTS FOR ANY INCREASE IN CAPACITIES SHALL BE REVIEWED BY ENGINEER.

14. CONTRACTOR SHALL CONFIRM WITH LOCAL UTILITY COMPANY ANY/ALL REQUIREMENTS SUCH AS THE: LUG SIZE RESTRICTIONS, CONDUIT ENTRY, SIZE OF TRANSFORMERS, SCHEDULED DOWNTIME FOR THE OWNERS' CONFIRMATION, ETC. ANY/ALL CONFLICTS SHALL BE BROUGHT TO THE ATTENTION OF THE CONSTRUCTION MANAGER, PRIOR TO BEGINNING ANY WORK.

LICENSES, CERTIFICATIONS OF INSPECTION

1. CONTRACTOR SHALL BE RESPONSIBLE FOR NOTIFICATION OF ALL GOVERNING AGENCIES THAT REQUIRE SITE INSPECTION OF THE WORK AND/OR SIMPLY NOTIFICATION. THE CONTRACTOR SHALL OBTAIN AND PAY FOR PERMITS, LICENSES AND INSPECTIONS NECESSARY FOR PERFORMANCE OF THE WORK.

2. CONTRACTOR AND ALL OF HIS SUBCONTRACTORS THAT PERFORM ANY WORK ON THIS PROJECT SHALL BE CURRENTLY LICENSED BY ALL AGENCIES WHICH GOVERN OVER THE LAND(S) ON WHICH CONSTRUCTION IS TO TAKE PLACE. CONTRACTOR SHALL SECURE ALL PERMITS AND INSPECTIONS AS REQUIRED, ALL COSTS SHALL BE BORNE BY CONTRACTOR.

3. THE CONTRACTOR SHALL SECURE AND PAY FOR ALL PERMITS, LICENSES AND INSPECTIONS INCIDENTAL TO WORK UNDER THIS CONTRACT. WHEN THE WORK IS COMPLETED, THE REQUIRED CERTIFICATES OF APPROVAL SHALL BE FURNISHED TO THE BUILDING OWNER. CONTRACTOR MUST BE LICENSED IN THE STATE, COUNTY AND CITY OF THE PROJECT SITE.

CODES AND ORDINANCES

1. ALL WORK SHALL BE DONE IN STRICT ACCORDANCE WITH LATEST EDITION OF NEC AND ALL APPLICABLE CODES AND ORDINANCES, INCLUDING SUCH AS PERTAIN TO THE SAFETY AND HEALTH RELATIONS. CODES AND ORDINANCES SHALL TAKE PRECEDENCE OVER THE DRAWINGS AND SPECIFICATIONS ONLY IN CASE OF CONFLICT AND SHALL INCLUDE BUT NOT BE LIMITED TO:

A. UL - UNDERWRITERS LABORATORIES
B. NEC - NATIONAL ELECTRICAL CODE
C. NEMA - NATIONAL ELECTRICAL MANUFACTURERS ASSOC.
D. OSHA - OCCUPATIONAL SAFETY AND HEALTH ACT
E. SBC - STANDARD BUILDING CODE
F. NFPA - NATIONAL FIRE CODES

POST CONSTRUCTION AND PROJECT CLOSEOUT DOCUMENTATION

1. AS-BUILT REQUIREMENTS: DO NOT USE RECORD DOCUMENTS FOR CONSTRUCTION PURPOSES. TO PROTECT RECORD DOCUMENTS FROM DETERIORATION AND LOSS, STORE IN A SECURE, FIRE-RESISTANT LOCATION. PROVIDE ACCESS TO RECORD DOCUMENTS FOR THE OWNER'S REFERENCE DURING NORMAL WORKING HOURS. MAINTAIN A CLEAN, UNDAMAGED SET OF BLUE OR BLACK LINE PRINTS OF CONTRACT DRAWINGS AND SHOP DRAWINGS. MARK THE SET TO SHOW THE ACTUAL INSTALLATION WHERE THE INSTALLATION VARIES SUBSTANTIALLY FROM THE WORK AS ORIGINALLY SHOWN. MARK DRAWINGS THAT ARE MOST CAPABLE OF SHOWING CONDITIONS FULLY AND ACCURATELY. WHERE SHOP DRAWINGS ARE USED, RECORD A CROSS-REFERENCE AT THE CORRESPONDING LOCATION ON THE CONTRACT DRAWINGS. GIVE PARTICULAR ATTENTION TO CONCEALED ELEMENTS THAT WOULD BE DIFFICULT TO MEASURE AND RECORD AT A LATER DATE. MARK RECORD SETS WITH RED ERASABLE PENCIL. USE OTHER COLORS TO DISTINGUISH BETWEEN VARIATIONS IN SEPARATE CATEGORIES OF THE WORK. MARK NEW INFORMATION THAT IS IMPORTANT TO THE OWNER BUT WAS NOT SHOWN ON THE CONTRACT DRAWINGS, DETAILS OR SHOP DRAWINGS. NOTE RELATED CHANGE ORDER NUMBERS WHERE APPLICABLE. NOTE RELATED RECORD DRAWING INFORMATION AND PRODUCT DATA. UPON COMPLETION OF THE WORK, SUBMIT ONE (1) COMPLETE SET OF RECORD DOCUMENTS TO THE CONSTRUCTION MANAGER FOR THE OWNER'S RECORDS. CONTRACTOR SHALL SUBMIT AS-BUILT SET OF PLANS TO THE ENGINEER WITHIN 7 DAYS OF COMPLETION OF CONSTRUCTION.

EXISTING CONDITIONS AND DEMOLITION

1. ALL ELECTRICAL DEMOLITION WORK, INCLUDING MATERIAL REMOVAL FROM THE SITE, SHALL BE THE RESPONSIBILITY OF THIS CONTRACTOR. BEFORE PROCEEDING WITH THE DEMOLITION WORK, THE CONTRACTOR SHALL OBTAIN FROM THE BUILDING OWNER A LIST OF ANY REMOVED ITEMS TO BE SALVAGED. ALL OTHER REMOVED MATERIALS AND EQUIPMENT SHALL BE PROPERLY DISCARDED OFF THE PREMISES.

2. CONTRACTOR SHALL BE RESPONSIBLE FOR ANY DAMAGE TO EXISTING PROPERTY RESULTING FROM THE CONSTRUCTION ACTIVITIES. CONTRACTOR SHALL REMOVE ALL DEBRIS FROM THE SITE AT THE COMPLETION OF WORK.

3. EXISTING UTILITIES AND CONDITIONS ARE SHOWN FROM FIELD DATA AND EXISTING DOCUMENTS AND ARE NOT NECESSARILY COMPLETE OR ACCURATE. ALL FIELD CONDITIONS SHALL BE VERIFIED BY CONTRACTOR BEFORE START OF CONSTRUCTION.

4. CONTRACTOR SHALL BE RESPONSIBLE TO LOCATE, EXPOSE, AND DETERMINE IF CONFLICTS EXIST WITH THE PROPOSED IMPROVEMENTS. CONTRACTOR SHALL NOTIFY THE OWNER IN ORDER TO RESOLVE ANY CONFLICTS. EXISTING ELECTRICAL CONDUIT, WIRING, ETC. DAMAGED DURING RENOVATION SHALL BE REPLACED IN LIKE KIND AND CHARACTER, AND AT THE EXISTING UTILITY LINES, DRAIN OR FIELD TILE DAMAGED SHALL BE REPAIRED OR REPLACED, AS NEEDED, IN LIKE KIND AND CHARACTER. IT SHALL BE THE RESPONSIBILITY OF THE CONTRACTOR TO LOCATE ALL EXISTING CONDUITS, CONTROL WIRING, ETC., WHETHER SHOWN HEREON OR NOT, AND TO PROTECT THEM FROM DAMAGE. THE CONTRACTOR SHALL BEAR ALL EXPENSES FOR REPAIR OR REPLACEMENT OF PROPERTY DAMAGED IN CONJUNCTION WITH THE EXECUTION OF WORK.

5. THE CONTRACTOR SHALL NOTIFY THE OWNER OF ANY CONFLICTS OR DISCREPANCIES IN THE CONTRACT DOCUMENTS OR FIELD CONDITIONS PRIOR TO EXECUTING THE WORK IN QUESTION. THE CONTRACTOR SHALL NOTIFY THE CONSTRUCTION MANAGER IF DETAILS ARE CONSIDERED UNSOUND, UNSAFE, NOT WATERPROOF, OR NOT WITHIN CUSTOMARY TRADE PRACTICE. IF WORK IS PERFORMED, IT WILL BE ASSUMED THAT THERE IS NO OBJECTION TO THE DETAIL. DETAILS ARE INTENDED TO SHOW THE END RESULT OF THE DESIGN. MINOR MODIFICATIONS MAY BE REQUIRED TO SUIT JOB CONDITIONS, AND SHALL BE INCLUDED AS PART OF THE WORK.

6. SITE VISIT - CONTRACTOR SHALL VISIT THE SITE AND FAMILIARIZE HIMSELF WITH ALL CONDITIONS AFFECTING HIS WORK. NO EXTRAS WILL BE PERMITTED FOR LACK OF KNOWLEDGE OF EXISTING CONDITIONS. QUANTITIES OF MATERIALS SHALL BE PER CONTRACTOR'S MEASUREMENTS.

BASIC ELECTRICAL MATERIALS AND METHODS

1. WHERE STRUCTURAL OPENINGS ARE NOT AVAILABLE, THE CONTRACTOR SHALL CORE DRILL OR CUT CHASES IN WALLS AND FLOORS AS REQUIRED. ALL NEW OPENINGS SHALL BE COORDINATED WITH THE ENGINEER. ALL PENETRATIONS OF THE BUILDING WALLS, CEILING AND FLOORS, THE CONTRACTOR SHALL SEAL WITH QUALITY CAULK, FIRE RATED AND WATERTIGHT, SUBMITTED FOR APPROVAL BY THE OWNER.

2. TRASH REMOVAL: CONTRACTOR SHALL REMOVE ALL TRASH CREATED BY HIMSELF OR HIS SUBCONTRACTORS DUE TO DEMOLITION OR CONSTRUCTION. THE CONTRACTOR SHALL ALSO REMOVE TRASH CREATED BY OTHER SUBCONTRACTORS INCLUDING CABLE REELS, CARDBOARD BOXES AND PACKING. PROMPTLY CLEAN-UP ALL SOILING, DEBRIS AND OTHER UNSIGHTLY OR HAZARDOUS CONDITIONS, CAUSED BY WORK OR DELIVERIES UNDER THIS CONTRACT, FROM THE BUILDING GROUNDS, ENTRIES, CORRIDORS, STAIRWAYS, ELEVATORS OR OTHER PUBLIC AREAS. ALL SHALL BE REMOVED FROM THE SITE IN A TIMELY FASHION TO A LEGAL DISPOSAL FACILITY.

3. SIGNAGE: CONTRACTOR SHALL MAINTAIN SECURITY AROUND PERIMETER OF CONSTRUCTION SITE DURING ALL HOURS BY INSTALLING A TEMPORARY RIBBON FOR INTERIOR WORK TO IDENTIFY CONSTRUCTION AREAS AS REQUIRED. SIGNAGE SHALL BE POSTED WITH NOTIFICATIONS OF "NO TRESPASSING" AND "CONSTRUCTION AREA".

4. CHECK ACCURACY OF ALL DIMENSIONS IN THE FIELD. UNLESS SPECIFICALLY NOTED, DO NOT FABRICATE ANY MATERIALS OFF SITE, NOR DO ANY CONSTRUCTION UNTIL THE ACCURACY OF DRAWING DIMENSIONS HAVE BEEN VERIFIED AGAINST ACTUAL FIELD DIMENSIONS.

5. CONTRACTOR SHALL BE RESPONSIBLE FOR ALL NECESSARY CUTTING, SUBSEQUENT PATCHING, AND REQUIRED FLASHING FOR ALL ITEMS NECESSARY FOR ELECTRICAL PART OF THE CONTRACT. PATCH, PAINT, AND REPAIR ANY AREA DAMAGED TO THE SATISFACTION OF THE BUILDING OWNER.

6. THE EXACT LOCATIONS OF ALL ELECTRICAL DEVICES, EQUIPMENT AND CONDUIT, AS SHOWN ON THE DRAWING, IS APPROXIMATE. WHEN NOT SHOWN IN DETAIL, THE EXACT LOCATION OR ROUTING SHALL BE DETERMINED BY THE CONTRACTOR, SUBJECT TO THE APPROVAL OF OWNER.

7. THE CONTRACTOR SHALL PROVIDE ALL NECESSARY BLOCKING, BACKING, FRAMING, HANGERS OR OTHER SUPPORT FOR THE MOUNTING AND SUPPORT OF ALL ITEMS REQUIRING THE SAME AS REQUIRED BY N.E.C.

8. TRENCHING AND BACK FILL: CONTRACTOR SHALL PROVIDE FOR ALL UNDERGROUND INSTALLED CONDUIT AND/OR CABLES INCLUDING EXCAVATION AND BACKFILLING AND COMPACTION.

9. WHEN DIRECTIONAL BORING IS REQUIRED, CONTRACTOR SHALL INSTALL A LOOSE TONING WIRE WITHIN INSTALLED CONDUIT TO ALLOW FOR IDENTIFICATION OF UNDERGROUND CONDUITS.

10. ALL BOLTS SHALL BE STAINLESS STEEL.

11. FOR UNDERGROUND RACEWAYS, PROVIDE ADDITIONAL SLACK IN CONDUCTORS AND CONDUIT EXPANSION JOINTS IN ORDER TO ALLOW FOR EARTH MOVEMENT FROM SETTLEMENT, FROST, ETC. IN ORDER TO PREVENT DAMAGE TO THE CONDUCTORS OR TO THE EQUIPMENT CONNECTED TO THE RACEWAYS PER THE NEC.

ELECTRICAL EQUIPMENT

1. ALL EQUIPMENT SHALL BE DESIGNED TO OPERATE ON VOLTAGE AND PHASE SPECIFIED. CONTRACTOR FURNISHING EQUIPMENT OTHER THAN INDICATED SHALL BE RESPONSIBLE FOR ANY CHANGES IN CONDUCTORS, RACEWAYS, SWITCHES, MAIN FEEDERS, AND APPURTENANCES AND PAY ALL ASSOCIATED COSTS. REQUIREMENTS FOR ANY INCREASE IN CAPACITIES SHALL BE REVIEWED BY ENGINEER.

2. ALL ELECTRICAL EQUIPMENT SHALL BE LABELED, LISTED, OR CERTIFIED BY A NATIONALLY RECOGNIZED TESTING LABORATORY ACCREDITED BY THE UNITED STATES OCCUPATIONAL SAFETY HEALTH ADMINISTRATION.

FIRESTOPPING AND SEALING ELECTRICAL PENETRATIONS

1. CONTRACTOR SHALL FURNISH AND INSTALL FIRESTOPPING FOR SEALING AROUND ELECTRICAL PENETRATIONS THROUGH FIRE OR SMOKE BARRIERS, AND FLOORS.

2. PROVIDE SHOP DRAWINGS OF EACH CONDITION REQUIRING PENETRATION SEALS AND THE PROPOSED UL SYSTEMS MATERIALS, ANCHORAGE, METHODS OF INSTALLATION, AND ACTUAL ADJACENT CONSTRUCTION. SUBMITTAL PACKAGE SHALL ALSO INCLUDE A COPY OF THE UL ILLUSTRATION OF EACH PROPOSED SYSTEM INDICATING MANUFACTURER APPROVED MODIFICATIONS (IF APPLICABLE) AND THE MANUFACTURER'S SPECIFICATIONS, RECOMMENDATIONS, INSTALLATION INSTRUCTIONS, AND MAINTENANCE INSTRUCTIONS.

3. FIRESTOPPING MATERIALS SHALL BE INTUMESCENT SAFETY BARRIERS DESIGNED TO BLOCK THE SPREAD OF FIRE AND SMOKE THROUGH PENETRATIONS CREATED BY ELECTRICAL INSTALLATIONS IN FIRE RATED WALLS AND FLOORS. MATERIALS SHALL BE FLAME, TOXIC FUME, AND WATER RESISTANT AND SHALL HAVE A MINIMUM 3 HOUR FIRE RATING. FIRE RATING SHALL BE DEFINED BY TESTS CONDUCTED BY ASTM, UL OR OTHER TESTING AND INSPECTION AGENCIES ACCEPTABLE TO AUTHORITIES HAVING JURISDICTION.

4. PROVIDE MATERIALS BY THE FOLLOWING MANUFACTURERS TO SUIT THE APPLICATION: SPECIFIED TECHNOLOGIES, INC (STI), SOMERVILLE, NJ; TREMCO, INC., BEACHWOOD, OH; OR 3M INC., MINNEAPOLIS, MN

FAULT CURRENT, COORDINATION STUDY, AND ARC FLASH

1. CONTRACTOR SHALL CONDUCT A FAULT CURRENT CALCULATION ON ALL EQUIPMENT AND MARK AS REQUIRED PER THE N.E.C.

2. CONTRACTOR SHALL PROVIDE AN ARC-FLASH STUDY AND LABEL ALL EQUIPMENT AS REQUIRED PER THE N.E.C.

GROUNDING AND BONDING FOR ELECTRICAL SYSTEMS

1. ALL RACEWAYS AND EQUIPMENT SHALL BE GROUNDED IN ACCORDANCE WITH THE N.E.C. AND ANY LOCAL CODES.

2. ALL CONDUITS SHALL CONTAIN A CODE SIZE GROUNDING CONDUCTOR.

3. EQUIPMENT GROUNDING CONDUCTORS SHALL BE INSULATED WITH GREEN-COLORED INSULATION.

4. GROUNDING ELECTRODE CONDUCTORS SHALL BE STRANDED CABLE.

5. MATERIALS AND CONNECTION COMPONENTS FOR GROUNDING AND BONDING SHALL BE MANUFACTURED BY ERICO, THOMAS & BETTS, OR BURNDY.

6. GROUND-FAULT PROTECTION OF EQUIPMENT SHALL BE PROVIDED FOR SERVICE DISCONNECTS RATED 1000A OR MORE. THE GROUND-FAULT PROTECTION SYSTEM SHALL BE PERFORMANCE TESTED WHEN FIRST INSTALLED ON SITE. THE TEST SHALL BE CONDUCTED IN ACCORDANCE WITH INSTRUCTIONS THAT SHALL BE PROVIDED WITH THE EQUIPMENT. A WRITTEN RECORD OF THIS TEST SHALL BE MADE AND SHALL BE AVAILABLE TO THE AUTHORITY HAVING JURISDICTION.

7. ALL HARDWARE SHALL BE STAINLESS STEEL 3/8" DIAMETER OR LARGER. ALL HARDWARE 18-8 STAINLESS STEEL INCLUDING LOCK WASHERS, COAT ALL SURFACES WITH AN ANTI-OXIDANT COMPOUND BEFORE MATING.

8. FOR GROUND BOND TO STEEL ONLY: INSERT A CADMIUM FLAT WASHER BETWEEN LUG AND STEEL, COAT ALL SURFACES WITH AN ANTI-OXIDANT COMPOUND BEFORE MATING.

9. NUT & WASHER SHALL BE PLACED ON THE FRONT SIDE OF THE GROUND BAR AND BOLTED ON THE BACK SIDE. INSTALL BLACK HEAT-SHRINKING TUBE, ON ALL GROUND TERMINATIONS. THE INTENT IS TO WEATHERPROOF THE COMPRESSION CONNECTION.

10. ENSURE THE WIRE INSULATION TERMINATION IS WITHIN 1/8" OF THE BARREL (NO SHINERS).

11. ALL GROUNDING HARDWARE SUPPLIED AND INSTALLED BY CONTRACTOR.

ELECTRICAL IDENTIFICATION

1. PROVIDE NAMEPLATES FOR ALL MAJOR ELECTRICAL EQUIPMENT AND ON EQUIPMENT AS DIRECTED BY OWNER.

2. PROVIDE ALL FEEDERS AND BRANCH CIRCUIT WIRING WITH COLOR CODED VINYL TAPE WRAPPED A MINIMUM OF 1.5 TIMES AROUND CIRCUMFERENCE OF JACKET/SHIELDING TO DESIGNATE PHASE.

3. COLOR CODING OF CONDUCTORS SHALL BE PER NEC REQUIREMENTS.

4. CONTRACTOR SHALL PLACE TWO LENGTHS OF WARNING TAPE AT A DEPTH OF 12" BELOW GROUND AND DIRECTLY ABOVE ELECTRICAL SERVICE CONDUITS. CAUTIONS TAPE TO READ "CAUTION BURIED ELECTRIC"

CONDUCTORS AND CABLES

1. WIRING - ALL CONDUCTORS SHALL BE EQUAL TO OR BETTER THAN MINIMUM #12 AWG FOR POWER, #14 AWG FOR CONTROL WITH 98% CONDUCTIVITY STRANDED COPPER, 600V, COLOR CODED, UNLESS NOTED ALUMINUM (AL). REFER TO "ALUMINUM CONDUCTOR REQUIREMENTS" THIS SHEET. PROVIDE 75°C RATED CONDUCTORS FOR AMPACITIES ABOVE 100A AND 60°C RATED CONDUCTORS FOR AMPACITIES OF 100 AMPS OR LESS. PROVIDE SOLID OR STRANDED FOR #10 AWG AND SMALLER, STRANDED FOR #8 AWG AND LARGER. UNLESS NOTED OTHERWISE ON DRAWINGS.

2. WIRE SIZE OF BRANCH CIRCUITS SHALL BE ADJUSTED TO COMPENSATE FOR VOLTAGE DROP BASED UPON ACTUAL CONDUIT ROUTING. CONTRACTOR SHALL MAINTAIN VOLTAGE DROP AS RECOMMENDED BY N.E.C. (NOT TO EXCEED 3%).

3. PROVIDE A SEPARATE NEUTRAL FOR EACH BRANCH CIRCUIT, FEEDER, ETC. NEUTRALS ARE NOT PERMITTED TO BE SHARED.

4. CONNECTORS FOR POWER CONDUCTORS: CONTRACTOR SHALL USE PRESSURE TYPE INSULATED TWIST-ON CONNECTORS FOR NO. 10 AWG AND SMALLER. USE SOLDERLESS MECHANICAL TERMINAL LUGS FOR NO. 8 AWG AND LARGER.

5. ALL CONNECTIONS SHALL BE MADE WITH A PROTECTIVE COATING OF AN ANTI-OXIDE COMPOUND SUCH AS "NO-OXIDE A" BY DEARBORNE CHEMICAL CO. COAT ALL WIRE SURFACES BEFORE CONNECTING. EXPOSED COPPER SURFACES, INCLUDING GROUND BARS, SHALL BE TREATED - NO SUBSTITUTIONS.

6. CABLES - MC CABLE IS NOT PERMITTED.

7. PROVIDE WIRE AND CABLE MANUFACTURED BY ONE OF THE FOLLOWING: AMERICAN INSULATED WIRE CORPORATION; NEXANS; CERROWIRE; SOUTHWIRE; OR ENCORE WIRE.

8. PROVIDE CONNECTORS MANUFACTURED BY ONE OF THE FOLLOWING: AMP INCORPORATED; GENERAL SIGNAL, O-Z/GEDNEY UNIT; SQUARE D COMPANY, ANDERSON; ILSCO; OR BURNDY.

ALUMINUM CONDUCTOR REQUIREMENTS

1. ALUMINUM CONDUCTOR GRADE SHALL BE MINIMUM AA-8000 OR THE NEWEST ALUMINUM CONDUCTOR SPECIFICATION BEING USED BY THE INDUSTRY.

2. THE CONTRACTOR SHALL ABIDE BY ALL ARTICLES RELATED TO ALUMINUM CONDUCTORS IN THE LATEST ISSUE OF THE NEC.

3. ALUMINUM CONDUCTORS SHALL ONLY BE TERMINATED USING ALUMINUM RATED CONNECTIONS. CONTRACTOR SHALL VERIFY TERMINATIONS ON EACH DEVICE OR EQUIPMENT BEFORE START OF WORK FOR RATED ALUMINUM CONNECTORS.

4. ALL ALUMINUM (AI) CONDUCTORS TO RECEIVE ANTI-OXIDATIVE COATING DURING INSTALLATION. ALL OTHER CONDUCTORS ARE COPPER UNLESS NOTED OTHERWISE.

5. THE CONTRACTOR SHALL ABIDE BY ALL ALUMINUM WIRING INSTALLATION STANDARDS AS REQUIRED BY THE NEIS (NATIONAL ELECTRICAL INSTALLATION STANDARDS) PUBLISHED BY THE NECA (NATIONAL ELECTRICAL CONTRACTORS ASSOCIATION). THE CONTRACTOR SHALL ABIDE BY ALL STANDARDS IN THE NECA / AA - 2006, WHICH DEFINES MINIMUM STANDARDS OF QUALITY AND WORKMANSHIP. A SUMMARY OF SOME OF THE REQUIREMENTS FOLLOW:

A. TERMINATE WITH COMPRESSION CONNECTORS, NO RING CUTS OF THE INSULATION, CRIMP ONLY WITH A CRIMP TOOL AND THE CORRECT DIE AS REQUIRED BY THE MANUFACTURER.
B. ALL CONDUCTORS TO RECEIVE ANTI-OXIDATIVE COATING DURING INSTALLATION.
C. TERMINATING WITH A SET SCREW CONNECTOR, THE SCREW SHALL BE TIGHTENED USING ONLY A TORQUE WRENCH.
D. NECA / AA RECOMMENDS BELLVILLE WASHERS WHEN CONNECTING ALUMINUM CONDUCTORS TO COPPER BUS BARS. ABIDE BY ALL NECA / AA RECOMMENDATIONS.
E. DO NOT USE PIN CONNECTORS (WIRE ADAPTERS) UNLESS ABSOLUTELY NECESSARY. USE ALL / ANY OTHER OPTIONS, AND IF REQUIRED, PROVE TO ENGINEER BEFORE INSTALLING. IF USED, FOLLOW U.L. GUIDE FOR WIRE CONNECTORS (ZMOW), AND PROVIDE THE SPECIAL TOOLS REQUIRED BY THE MANUFACTURER. DIE-LESS CRIMPERS WILL NOT BE ACCEPTED.

RACEWAY AND BOXES

1. RACEWAYS: UNLESS NOTED OTHERWISE, ALL EXPOSED CONDUIT SHALL BE R.G.S. AND COVERED 6" BELOW FINISHED GRADE TO BE PVC, HDPE, OR LFNC. SEE NOTES A & B BELOW. PROVIDE WEATHERPROOF FLEX CONNECTIONS WHERE REQUIRED. CONTRACTOR SHALL PROVIDE JUNCTION AND/OR PULL BOXES WHERE SHOWN ON THE DRAWINGS, OR AS REQUIRED, WHETHER SHOWN ON THE DRAWINGS OR NOT, AND SIZED PER N.E.C. PROVIDE NON-METALLIC ENCLOSURE WITH OPEN BOTTOM AND GASKETED COVER MANUFACTURED BY QUAZITE OR EQUIVALENT WITH DRIVE-OVER COVER ABLE TO WITHSTAND OCCASIONAL NON-DELIBERATE LIGHT VEHICULAR TRAFFIC. LABEL COVER TO SUIT INSTALLATION (I.E. "POWER" "COMMUNICATIONS", "LIGHTING", ETC.) AND INSTALL PER MANUFACTURER'S RECOMMENDATIONS.

A. OUTDOOR:
- ABOVE GRADE: R.G.S.
- BELOW GRADE: SCH 40 PVC, SCH 40 HDPE, OR NON-METALLIC FLEXIBLE CONDUIT LISTED FOR DIRECT BURIAL. ALL UNDERGROUND CONDUIT SHALL BE 90°C WET RATED AND INSTALLED 24" MIN. BELOW GRADE. VERIFY APPROVED USE OF HDPE WITH AHJ PRIOR TO ROUGH-IN AND INSTALL PER NEC & MFR RECOMMENDATIONS.

B. PARKING GARAGES:
- RGS: 8'-0" OR LESS ABOVE GRADE OR PARKING GARAGE FLOOR LEVEL
- EMT: 8'-0" MINIMUM ABOVE PARKING GARAGE FLOOR LEVEL AND WHERE NOT SUBJECT TO DAMAGE. CONTRACTOR SHALL VERIFY WITH ELECTRICAL INSPECTOR IF EMT IS APPROVED AT THIS PROJECT PRIOR TO ROUGH-IN.

2. ALL WIRING SHALL BE INSTALLED IN CONDUIT. ALL CONDUIT SHALL BE A MINIMUM OF 3/4".

3. CONTRACTOR SHALL PLUG AND CAP EACH END OF SPARE AND EMPTY CONDUITS AND PROVIDE TWO SEPARATE PULL STRINGS - 200 LBS TEST POLYETHYLENE CORD. CONTRACTOR SHALL PROVIDE MANUFACTURED LONG RADIUS BENDS FOR ALL CONDUITS. RGS CONDUITS WHEN SPECIFIED, SHALL MEET UL-6 FOR GALVANIZED STEEL. ALL FITTINGS SHALL BE SUITABLE FOR USE WITH THREADED RIGID CONDUIT. COAT ALL THREADS WITH 'BRITE ZINC' OR 'GOLD GALV'.

4. OUTLET BOXES SHALL BE CAST ALLOY WITH THREADED HUBS IN WET/DAMP LOCATIONS AND SPECIAL ENCLOSURES FOR OTHER CLASSIFIED AREAS.

5. PROVIDE METAL CONDUIT AND TUBING MANUFACTURED BY ONE OF THE FOLLOWING: ALFLEX CORPORATION; ANAMET INCORPORATED, ANACONDA METAL HOSE; ANIXTER BROTHERS INCORPORATED; CAROL CABLE COMPANY INCORPORATED; ELECTRI-FLEX COMPANY; GRINNELL COMPANY, ALLIED TUBE AND CONDUIT DIVISION; MONOGRAM COMPANY, AFC; REPUBLIC CONDUIT; OR WHEATLAND TUBE COMPANY.

6. PROVIDE NONMETALLIC CONDUIT AND TUBING MANUFACTURED BY ONE OF THE FOLLOWING: ANAMET INCORPORATED, ANACONDA METAL HOSE; CANTEX INDUSTRIES, HARSCO CORPORATION; CONDUX INTERNATIONAL, ELECTRICAL PRODUCTS; HUBBELL INCORPORATED, RACO, INCORPORATED; THOMAS & BETTS CORPORATION, CARLON ELECTRICAL PRODUCTS; OR O-Z/GEDNEY, UNIT OF GENERAL SIGNAL.

7. PROVIDE CONDUIT BODIES AND FITTINGS MANUFACTURED BY ONE OF THE FOLLOWING: CROUSE-HINDS, DIVISION OF COOPER INDUSTRIES; EMERSON ELECTRIC COMPANY, APPLETON ELECTRIC COMPANY; HUBBELL INCORPORATED, KILLARK ELECTRIC MANUFACTURING COMPANY; THOMAS & BETTS CORPORATION, CARLON ELECTRICAL PRODUCTS; OR O-Z/GEDNEY, UNIT OF GENERAL SIGNAL.

8. PROVIDE METAL WIREWAYS MANUFACTURED BY ONE OF THE FOLLOWING: HOFFMAN ENGINEERING COMPANY; KEYSTONE/REES, INCORPORATED; OR SQUARE D COMPANY.

9. PROVIDE BOXES, ENCLOSURES, AND CABINETS MANUFACTURED BY ONE OF THE FOLLOWING: CROUSE-HINDS, DIVISION OF COOPER INDUSTRIES; HOFFMAN ENGINEERING COMPANY, FEDERAL-HOFFMAN INCORPORATED; HUBBELL INCORPORATED, RACO INCORPORATED; THOMAS & BETTS, CARLON ELECTRICAL PRODUCTS; O-Z/GEDNEY, UNIT OF GENERAL SIGNAL; ROBROY INDUSTRIES INCORPORATED, ELECTRICAL DIVISION; OR SCOTT FETZER COMPANY, ADALET-PLM.

SAFETY SWITCHES

1. ALL DISCONNECT SWITCHES SHALL BE HEAVY-DUTY CONSTRUCTION WITH LOCKABLE HANDLES SIZED AS NOTED ON THE DRAWINGS AND/OR RISER DIAGRAM. PROVIDE NEMA ENCLOSURE AS REQUIRED BY EXPOSURE TYPE. ALL FUSIBLE SWITCHES SHALL BE PROVIDED WITH DUAL ELEMENT FUSES SIZED PER THE EQUIPMENT MANUFACTURER'S RECOMMENDATION.

FUSES

1. FUSES SHALL BE DUAL ELEMENT, TIME DELAY CURRENT LIMITING. CONTRACTOR SHALL COORDINATE FUSE SIZES WITH EQUIPMENT MANUFACTURER'S REQUIREMENTS AND PER THE N.E.C. PROVIDE FUSES MANUFACTURED FROM ONE OF THE FOLLOWING: COOPER BUSSMAN, INCORPORATED; EAGLE ELECTRIC MANUFACTURING COMPANY INCORPORATED, COOPER INDUSTRIES INCORPORATED; FERRAZ SHAWMUT INCORPORATED.

GPD GROUP
Professional Corporation
520 South Main Street, Suite 2531
Akron, OH 44311
330.572.2100 Fax 330.572.2101

TESLA
3500 DEER CREEK RD
PALO ALTO, CA 94304
(650) 681-5000

REV.	DATE	DESCRIPTION
A	09.01.22	ISSUED FOR SITE SKETCH REVIEW
B	09.22.22	ISSUED FOR 90% REVIEW
C	10.06.22	SIGNED AND SEALED

STEVEN P. SCHAUB
NEW MEXICO
21768
PROFESSIONAL ENGINEER
10/06/22

5161 LANG AVE NE
(TESLA SUPERCHARGER)
TRT18975 - ALBUQUERQUE, NM 87109

ELECTRICAL GENERAL NOTES

ISSUED FOR:	
PERMIT	XXX
BID	XXX
CONSTRUCTION	XXX
RECORD	XXX

INSTALL MANAGER	DESIGNER
BETH SORENSEN	RDV

JOB NO.
2022141.67

EN-1

Drawing Name: O:\2022\2022141\67 - TRT 18975 - Albuquerque, NM - North Journal Center\dwg\2022141.67 - Albuquerque,NM - CD90.dwg
October 6, 2022 2:40 PM - MLogan

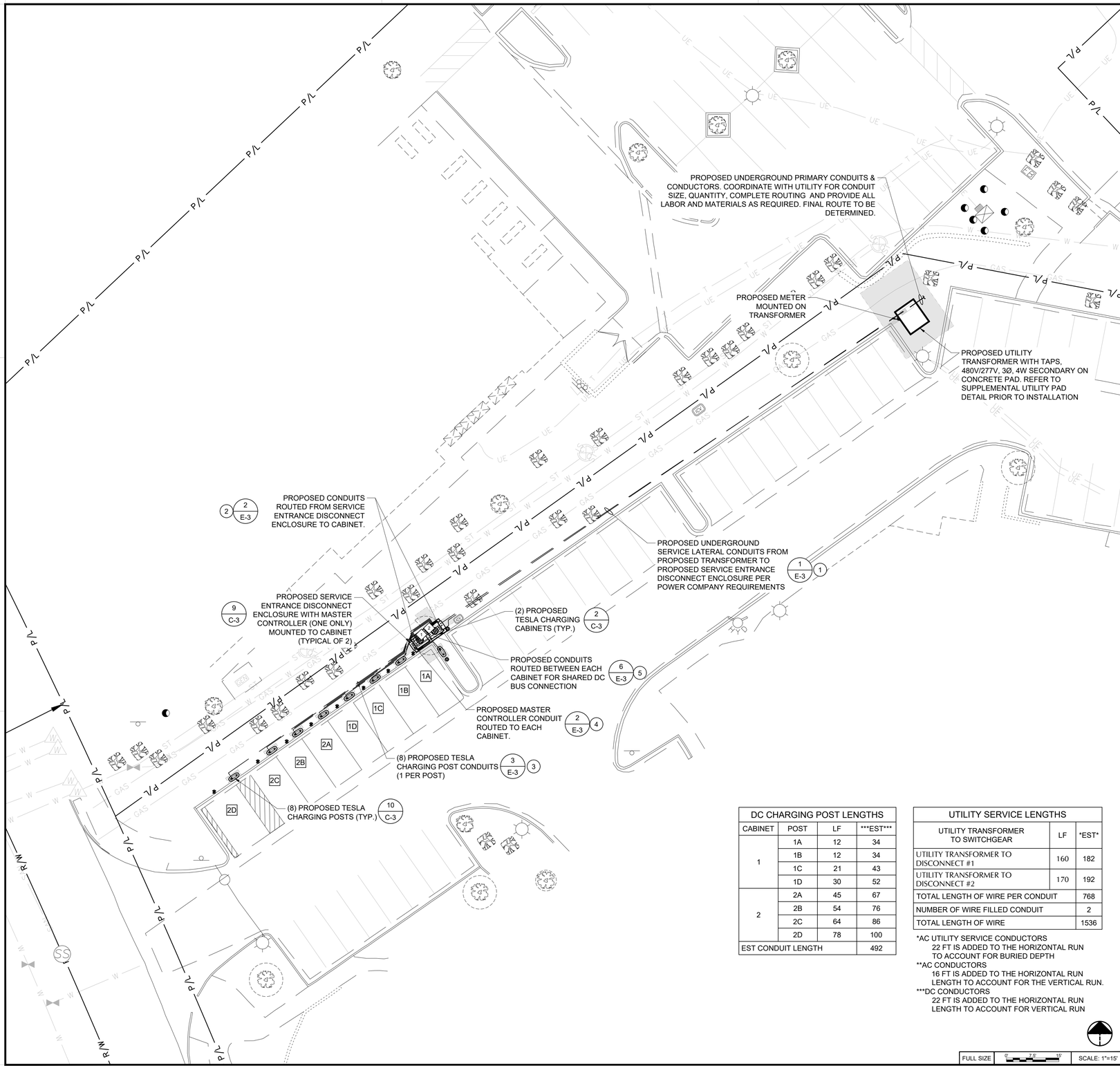

GENERAL SHEET NOTES

1. " # " DENOTES FEEDER REFERENCE. REFER TO SHEET E-2 FOR FEEDER/CIRCUIT SCHEDULE.
2. CONTRACTOR SHALL REFER TO CIVIL SHEETS FOR EXISTING LANDSCAPING TO REMAIN AND PROPOSED LANDSCAPING.
3. CONTRACTOR SHALL HAND DIG AROUND ALL EXISTING UTILITIES.
4. CONDUIT ELBOWS SHALL BE SIZED PER NEC. CONTRACTOR SHALL VERIFY MANUFACTURER ALLOWABLE FILL AND MINIMUM CONDUCTOR BENDING RADIUS. SEE FEEDER SCHEDULE FOR CONDUIT & CONDUCTOR SPECIFICATIONS.
5. ALL CONDUITS ACCESSIBLE TO THE PUBLIC OR WHICH CAN BE DAMAGED SHALL BE RIGID GALVANIZED STEEL.
6. PROPERTY LINE AND RIGHT-OF-WAY BOUNDARIES ARE SHOWN FOR REFERENCE ONLY. REFER TO SURVEY BY OTHERS FOR EXACT LOCATION.
7. UTILITY EQUIPMENT INSTALLATIONS AND PREP WORK SHALL BE COORDINATED WITH THE APPROPRIATE UTILITY ENGINEER TO ENSURE ACCURACY OF INSTALLATION.
8. ALL PROPOSED CONDUITS MUST MEET MINIMUM DEPTH REQUIREMENTS AS OUTLINED IN TRENCH DETAILS, AS WELL AS MAINTAIN A MINIMUM OF 18" CLEAR OF ALL EXISTING OBSTRUCTIONS INCLUDING (BUT NOT LIMITED TO) STORM PIPES, SANITARY PIPES, WATER LINES AND OTHER UNDERGROUND UTILITIES.
9. FOR TRAFFIC CONTROL PROCEDURES (IF APPLICABLE), SEE TRAFFIC CONTROL NOTES ON SHEET GN-1.

ELECTRICAL SCOPE OF WORK RESPONSIBILITIES

SCOPE	BY UTILITY	BY CONTRACTOR
PROVIDE PRIMARY SIDE TRENCHING		X
PROVIDE & INSTALL PRIMARY SIDE CONDUITS W/ PULLWIRE		X
PROVIDE & INSTALL PRIMARY SIDE CONDUCTORS	X	
PROVIDE & INSTALL UTILITY TRANSFORMER PAD		X
PROVIDE UTILITY TRANSFORMER	X	
INSTALL UTILITY TRANSFORMER	X	
INSTALL CONNECTIONS AT UTILITY TRANSFORMER (PRIMARY)	X	
INSTALL CONNECTIONS AT UTILITY TRANSFORMER (SECONDARY)	X	
PROVIDE METER BASE	X	
INSTALL METER BASE		X
PROVIDE METER	X	
INSTALL METER	X	
PROVIDE CTs	X	
INSTALL CTs (INSIDE TRANSFORMER)	X	
PROVIDE SECONDARY SIDE TRENCHING		X
PROVIDE & INSTALL SECONDARY SIDE CONDUITS W/ PULLWIRE		X
PROVIDE & INSTALL SECONDARY SIDE CONDUCTORS		X
PROVIDE ROAD CUTS / ROAD BORES		X
PROVIDE & INSTALL PAVEMENT REPLACEMENT		X

NOTE: SCOPE SHOWN ABOVE WAS PROVIDED BY PNM. FIELD VERIFY PRIOR TO CONSTRUCTION.

DC CHARGING POST LENGTHS

CABINET	POST	LF	***EST***
1	1A	12	34
	1B	12	34
	1C	21	43
	1D	30	52
2	2A	45	67
	2B	54	76
	2C	64	86
	2D	78	100
EST CONDUIT LENGTH			492

UTILITY SERVICE LENGTHS

UTILITY TRANSFORMER TO SWITCHGEAR	LF	*EST*
UTILITY TRANSFORMER TO DISCONNECT #1	160	182
UTILITY TRANSFORMER TO DISCONNECT #2	170	192
TOTAL LENGTH OF WIRE PER CONDUIT		768
NUMBER OF WIRE FILLED CONDUIT		2
TOTAL LENGTH OF WIRE		1536

*AC UTILITY SERVICE CONDUCTORS
22 FT IS ADDED TO THE HORIZONTAL RUN TO ACCOUNT FOR BURIED DEPTH
**AC CONDUCTORS
16 FT IS ADDED TO THE HORIZONTAL RUN LENGTH TO ACCOUNT FOR THE VERTICAL RUN.
***DC CONDUCTORS
22 FT IS ADDED TO THE HORIZONTAL RUN LENGTH TO ACCOUNT FOR VERTICAL RUN

POWER COMPANY CONTACTS

PNM
ATTN: DANIELLE MONTOYA
(480) 337-6589
DMONTOYA@BURNSMCD.COM

GPD GROUP
Professional Corporation
520 South Main Street, Suite 2531
Akron, OH 44311
330.572.2100 Fax 330.572.2101

TESLA
3600 DEER CREEK RD
PALO ALTO, CA 94304
(650) 681-5000

REV.	DATE	DESCRIPTION
A	09.01.22	ISSUED FOR SITE SKETCH REVIEW
B	09.22.22	ISSUED FOR 90% REVIEW
C	10.06.22	SIGNED AND SEALED

STEVEN P. SCHAUB
NEW MEXICO
21768
PROFESSIONAL ENGINEER
10/06/22

5161 LANG AVE NE
(TESLA SUPERCHARGER)
TRT18975 - ALBUQUERQUE, NM 87109

ELECTRICAL EQUIPMENT PLAN

ISSUED FOR:	
PERMIT	XXX
BID	XXX
CONSTRUCTION	XXX
RECORD	XXX

INSTALL MANAGER	DESIGNER
BETH SORENSEN	RDV

JOB NO.
2022141.67

E-1

Drawing Name: O:\2022\2022141\67 - TRT 18975 - Albuquerque, NM - North Journal Center\dwg\2022141.67 - Albuquerque,NM - CD90.dwg
October 6, 2022 2:40 PM - MLogan

SERVICE LOAD SUMMARY
S.E. DISCONNECT #1 CONNECTED LOAD: 465A
S.E. DISCONNECT #2 CONNECTED LOAD: 1A
S.E. DISCONNECT #3 CONNECTED LOAD: 465A
TOTAL SERVICE LOAD: 931A x 1.25 = 1164A

SECONDARY CONDUCTOR CALC.
(4) SETS OF 500 MCM AL @ 75° = 1240A

AVAILABLE FAULT CURRENT (AMPS)	
1	45,100
2	28,900
3	27,950

NOTE: FAULT CURRENT CALCULATIONS PERFORMED USING INFINITE BUS CALCULATION WITH AN ASSUMED 750kVA TRANSFORMER IMPEDANCE OF 2%.

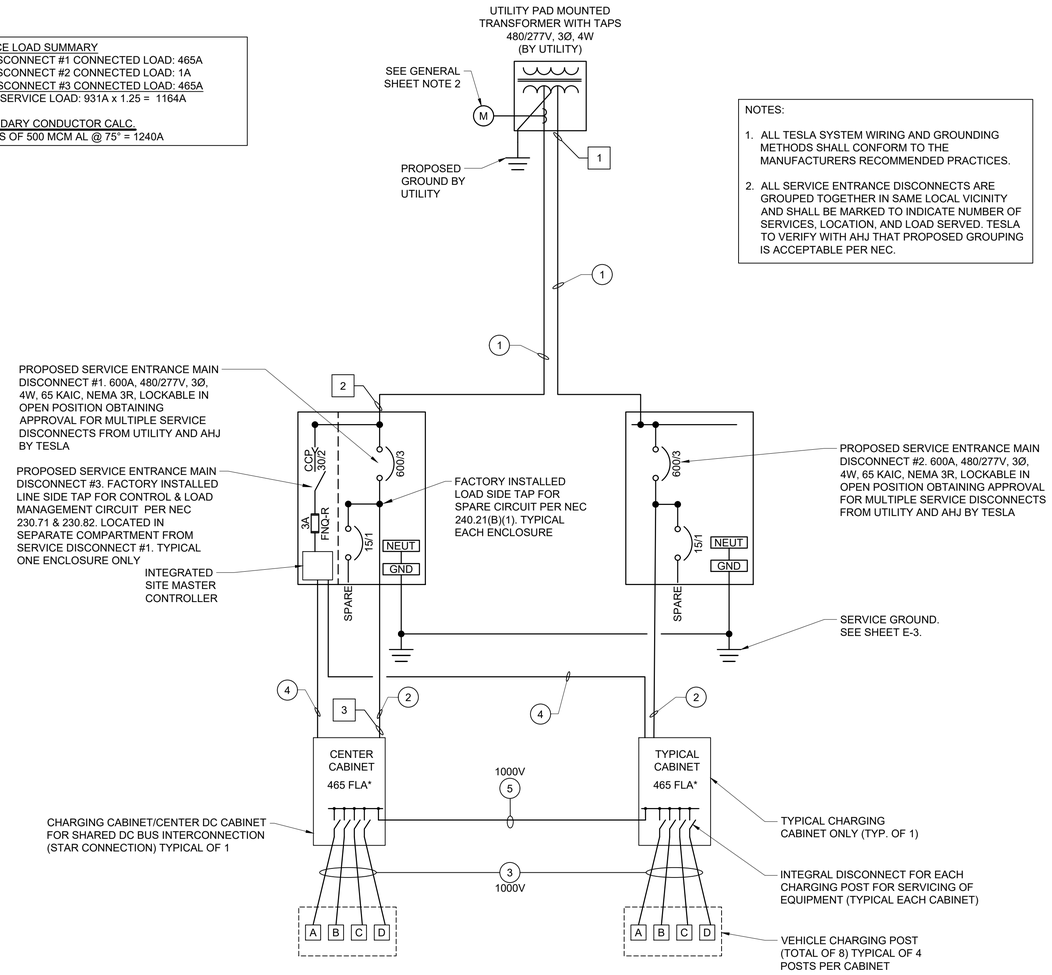

NOTES:

1. ALL TESLA SYSTEM WIRING AND GROUNDING METHODS SHALL CONFORM TO THE MANUFACTURERS RECOMMENDED PRACTICES.
2. ALL SERVICE ENTRANCE DISCONNECTS ARE GROUPED TOGETHER IN SAME LOCAL VICINITY AND SHALL BE MARKED TO INDICATE NUMBER OF SERVICES, LOCATION, AND LOAD SERVED. TESLA TO VERIFY WITH AHJ THAT PROPOSED GROUPING IS ACCEPTABLE PER NEC.

*OCPD FOR CHARGING CABINETS IS CALCULATED AS FOLLOWS:
465A AC INPUT TO CABINET x 1.25 = 581.25A ==> 600A REQUIRED

FEEDER/CIRCUIT SCHEDULE	
NO	CONFIGURATION
1	(2) SETS - EACH IN 4" CONDUIT (3) 500 MCM Al (1) 500 MCM Al NEUT VERIFY W/ UTILITY BEFORE CONSTRUCTION.
2	(2) SETS - EACH IN 4" CONDUIT (3) 500 MCM Al (1) 500 MCM Al NEUT (1) #1 AWG Cu GND OR #2/0 AWG Al GND
3	(1) SET - EACH IN 4" CONDUIT (4) 350 MCM Al (TWO +, TWO -) (1) #1 AWG Cu GND OR #2/0 AWG Al GND (1) 1000V, CLASS 1, COMM CABLE
4	OUTDOOR RATED/SHIELDED CAT5e OR CAT6 COMMUNICATION CABLE IN 1" CONDUIT.
5	(2) SETS - EACH IN 3" CONDUIT. (2) 600 MCM Al (ONE +, ONE -) (1) #3/0 AWG Al DC MID (1) #1/0 AWG Cu GND (1) #3/0 AWG Al DC MID DISC. 36" LONG IN EA. CABINET, NOT ROUTED IN CONDUIT

NOTE:
1. ALL AC CONDUCTORS SHALL BE XHHW-2, 600V RATED, U.N.O.
2. ALL DC CONDUCTORS SHALL BE XHHW-2, 1000V RATED, U.N.O.
3. FOR APPROVED COPPER/ALUMINUM EQUIPMENT GROUNDING CONDUCTOR EQUIVALENTS, SEE TABLE BELOW. ALL ALUMINUM EQUIPMENT GROUND CONDUCTORS SHALL BE TERMINATED IN OUTDOOR ENCLOSURES LISTED AND IDENTIFIED FOR THE ENVIRONMENT PER NEC 2020, ARTICLE 250.64(A)(2).
4. SEE "RACEWAY AND BOXES" NOTES ON SHEET EN-1 FOR CONDUIT USE TYPES FOR ABOVE AND BELOW GRADE APPLICATIONS.

MINIMUM EQUIPMENT GROUNDING CONDUCTOR SIZE		
AMPERE RATING OR SETTING OF OCPD IN CIRCUIT AHEAD OF EQUIPMENT	COPPER SIZE	ALUMINUM SIZE
15	12	12
20	12	10
60	10	8
100	8	6
200	6	4
300	4	2
400	3	1
500	2	1/0
600	1	2/0
800	1/0	3/0
1000	2/0	4/0
1200	3/0	250
1600	4/0	350
2000	250	400
2500	350	600
3000	400	600
4000	500	750

BREAKER SETTINGS								
BREAKER USE	BREAKER SIZE	LONG TIME PICKUP	LONG TIME DELAY	SHORT TIME PICKUP	SHORT TIME DELAY	INST	GND FAULT PICKUP	GND FAULT DELAY
MCB EATON PD3	600A	X	X	X	X	5	X	X
MCB EATON LGH	600A	X	X	X	X	5	X	X
MCB SQUARE D LJ	600A	600A	0.5	X	X	5	X	X
MCB SQUARE D LI	600A	X	X	X	X	LO	X	X
MCB ABB T5	600A	MAX (600A)	X	X	X	MIN (3000A)	X	X

NOTE: CONTRACTOR SHALL VERIFY BREAKER MAKE/MODEL AND SET PER THE ABOVE TABLE. NOTIFY TESLA IMMEDIATELY OF ANY DISCREPANCIES.

TESLA V3 CHARGING CABINET & POST ELECTRICAL SPECS							
CHARGE POST MODEL	AC INPUT VOLTAGE TO CABINET	kVA INPUT TO CABINET	AC INPUT CURRENT TO CABINET	DC OUTPUT VOLTAGE TO CHARGE POST	DC OUTPUT CURRENT TO CHARGE POST	DC SHARED BUS CURRENT	SHORT CIRCUIT CURRENT RATING
V3	380V-480V	387kVA	465A	0V - 500V	350A	640A	85 KAIC

GENERAL SHEET NOTES

1. NEUTRAL MUST BE INCLUDED FOR PROPER OPERATION OF TESLA SUPERCHARGERS.
2. PROPOSED UTILITY CTs SHALL BE LOCATED IN UTILITY APPROVED CT COMPARTMENTS MOUNTED IN TRANSFORMER. PROPOSED METER SHALL BE MOUNTED ON TRANSFORMER.
3. ALL CONDUIT FURNISHED AND INSTALLED BY CONTRACTOR.
4. ALL WIRING FURNISHED BY TESLA AND INSTALLED BY CONTRACTOR UNLESS NOTED OTHERWISE. SEE SHEET E-1 FOR UTILITY/CONTRACTOR SCOPE OF WORK.
5. THE TESLA PROVIDED CHARGING CABINETS AND THE CHARGING POSTS USED ON THIS PROJECT COMPLY WITH THE FOLLOWING STANDARDS:
   - TUV CERTIFIED TO UL 2202
6. ALL ELECTRICAL EQUIPMENT SHALL BE LABELED, LISTED, OR CERTIFIED BY A NATIONALLY RECOGNIZED TESTING LABORATORY ACCREDITED BY THE UNITED STATES OCCUPATIONAL SAFETY HEALTH ADMINISTRATION.
7. REFER TO THIS SHEET FOR FAULT CURRENT CALCULATIONS. CONTRACTOR SHALL MARK ON ALL EQUIPMENT AS REQUIRED PER N.E.C.
8. REFER TO SHEET E-3 FOR ARC FLASH LABEL DETAILS. CONTRACTOR SHALL LABEL ALL EQUIPMENT AS REQUIRED PER N.E.C.

GPD GROUP
Professional Corporation
520 South Main Street, Suite 2531
Akron, OH 44311
330.572.2100 Fax 330.572.2101

TESLA
3600 DEER CREEK RD
PALO ALTO, CA 94304
(650) 681-5000

REV.	DATE	DESCRIPTION
A	09.01.22	ISSUED FOR SITE SKETCH REVIEW
B	09.22.22	ISSUED FOR 90% REVIEW
C	10.06.22	SIGNED AND SEALED

STEVEN P. SCHAUB
NEW MEXICO
21768
PROFESSIONAL ENGINEER
10/06/22

5161 LANG AVE NE
(TESLA SUPERCHARGER)
TRT18975 - ALBUQUERQUE, NM 87109

ONE-LINE DIAGRAM

ISSUED FOR:	
PERMIT	XXX
BID	XXX
CONSTRUCTION	XXX
RECORD	XXX

INSTALL MANAGER	DESIGNER
BETH SORENSEN	RDV

JOB NO.
2022141.67

E-2

Drawing Name: O:\2022\2022141\67 - TRT 18975 - Albuquerque, NM - North Journal Center\dwg\2022141.67 - Albuquerque,NM - CD0B.dwg
October 6, 2022 2:40 PM - MLogan

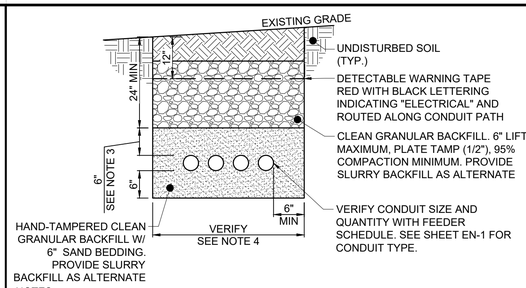

NOTES:

1. ANY EXCAVATION LEFT OPEN SHOULD BE SECURELY FENCED OFF. ALL TRENCHING SHALL BE ACCORDING TO THE LATEST OSHA STANDARDS.
2. ANY PAVEMENT DAMAGE DURING CONSTRUCTION SHALL BE REPAIRED OR REPLACED BY THE CONTRACTOR TO PRE-CONSTRUCTION CONDITIONS OR BETTER.
3. CONTRACTOR SHALL INSTALL CONDUITS BELOW LOCAL FROST LINE. SHOULD FIELD CONDITIONS VARY, CONTRACTOR SHALL COORDINATE WITH TESLA CONTACT LISTED ON SHEET T-1.
4. VERIFY WIDTH OF TRENCH REQUIRED. REFER TO SITE ELECTRICAL DRAWING FOR APPROXIMATE ROUTING.
5. THE CONTRACTOR SHALL FURNISH FLOWABLE FILL WITH A 28 DAY COMPRESSIVE STRENGTH RANGING FROM 50 PSI TO 100 PSI PER THE STATE DEPARTMENT OF TRANSPORTATION'S CONSTRUCTION AND MATERIAL SPECIFICATIONS, CURRENT EDITION, LATEST REVISION.
6. DC BUS CONDUITS ARE NOT TO BE STACKED UNDER ANY CIRCUMSTANCES.

DC BUS CIRCUIT TRENCH | N.T.S | 6

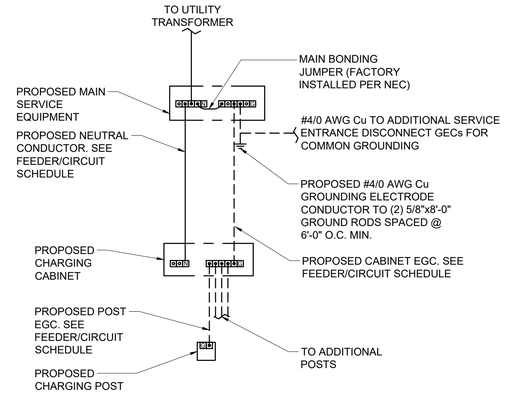

TYPICAL GROUNDING DIAGRAM | N.T.S | 4

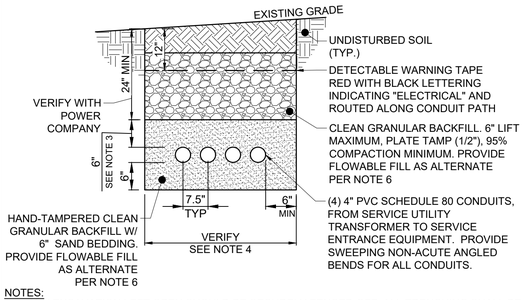

NOTES:

1. ANY EXCAVATION LEFT OPEN SHOULD BE SECURELY FENCED OFF. ALL TRENCHING SHALL BE ACCORDING TO THE LATEST OSHA STANDARDS.
2. ANY PAVEMENT DAMAGE DURING CONSTRUCTION SHALL BE REPAIRED OR REPLACED BY THE CONTRACTOR TO PRE-CONSTRUCTION CONDITIONS OR BETTER.
3. CONTRACTOR SHALL INSTALL CONDUITS BELOW LOCAL FROST LINE. SHOULD FIELD CONDITIONS VARY, CONTRACTOR SHALL COORDINATE WITH TESLA CONTACT LISTED ON SHEET T-1.
4. VERIFY WIDTH OF TRENCH REQUIRED. REFER TO SITE ELECTRICAL DRAWING FOR ROUTING.
5. VERIFY ALL REQUIREMENTS WITH POWER COMPANY
6. THE CONTRACTOR SHALL FURNISH FLOWABLE FILL WITH A 28 DAY COMPRESSIVE STRENGTH RANGING FROM 50 PSI TO 100 PSI PER THE STATE DEPARTMENT OF TRANSPORTATION'S CONSTRUCTION AND MATERIAL SPECIFICATIONS, CURRENT EDITION, LATEST REVISION.

SECONDARY FEEDERS TRENCH DETAIL | N.T.S | 1

DETAIL NOT USED | N.T.S | 9

DANGER

NO SAFE PPE EXISTS

ENERGIZED WORK PROHIBITED

FLASH PROTECTION		SHOCK PROTECTION	
Working Distance:	18 in	Shock risk when cover is removed	480 VAC
Glove Class:	00		
Arc Flash Boundary:	292 in		
PPE:	NO SAFE PPE		
Min. Arc Rating:	NO SAFE PPE	Limited Approach	42 in
DO NOT WORK ON LIVE!		Restricted Approach	12 in

Bus: INCOMING SECTION-MAIN Prot: MaxTripTime @2.0s

INCOMING UTILITY SECTION

WARNING

Arc Flash and Shock Risk

Appropriate PPE Required

FLASH PROTECTION		SHOCK PROTECTION	
Working Distance:	18 in	Shock risk when cover is removed	480 VAC
Glove Class:	00		
Arc Flash Boundary:	25 in		
PPE:	CAT 2		
Min. Arc Rating:	8 cal/cm^2	Limited Approach	42 in
		Restricted Approach	12 in

Bus: CHARGING CABINETS Prot: 600A BREAKER

CHARGING CABINETS

NOTES:

1. FOR ANY QUESTIONS OR CLARIFICATIONS REGARDING LABELS, CONTACT TESLA.
2. ARC FLASH INCIDENT ENERGY ANALYSIS COMPLETED PER NFPA 70E 2018.
3. ARC FLASH CALCULATIONS PER IEEE 1584, 2018.
4. LABELS SHALL BE PRINTED WITH PERMANENT INK ON WEATHERPROOF LABELS WITH SELF STICKING ADHESIVE.
5. INSTALL LABELS PER NEC SECTION 110.16.
6. FOR EACH SWITCHGEAR SECTION, CONTRACTOR SHALL PROVIDE (1) APPLICABLE LABEL ON EXTERIOR DOOR AND (1) APPLICABLE LABEL ON INTERIOR FRONT FACING SECTION. CONTRACTOR SHALL FIELD VERIFY SPECIFIC LOCATION FOR LABEL PLACEMENT(S).
7. CONTRACTOR SHALL PROVIDE LABELS WITH ANY ADDITIONAL INFORMATION AS REQUIRED BY LOCAL JURISDICTION, STATE AND FEDERAL CODES AND LAWS.

ARC FLASH LABELS | N.T.S | 10

DETAIL NOT USED | N.T.S | 7

DETAIL NOT USED | N.T.S | 5

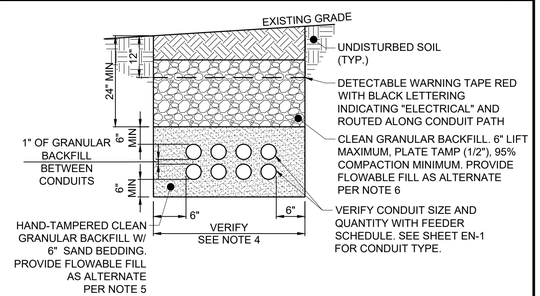

NOTES:

1. ANY EXCAVATION LEFT OPEN SHOULD BE SECURELY FENCED OFF. ALL TRENCHING SHALL BE ACCORDING TO THE LATEST OSHA STANDARDS.
2. ANY PAVEMENT DAMAGE DURING CONSTRUCTION SHALL BE REPAIRED OR REPLACED BY THE CONTRACTOR TO PRE-CONSTRUCTION CONDITIONS OR BETTER.
3. CONTRACTOR SHALL INSTALL CONDUITS BELOW LOCAL FROST LINE. SHOULD FIELD CONDITIONS VARY, CONTRACTOR SHALL COORDINATE WITH TESLA CONTACT LISTED ON SHEET T-1.
4. VERIFY WIDTH OF TRENCH REQUIRED. REFER TO SITE ELECTRICAL DRAWING FOR APPROXIMATE ROUTING.
5. THE CONTRACTOR SHALL FURNISH FLOWABLE FILL WITH A 28 DAY COMPRESSIVE STRENGTH RANGING FROM 50 PSI TO 100 PSI PER THE STATE DEPARTMENT OF TRANSPORTATION'S CONSTRUCTION AND MATERIAL SPECIFICATIONS, CURRENT EDITION, LATEST REVISION.

TYPICAL TRENCH DETAIL | N.T.S | 2

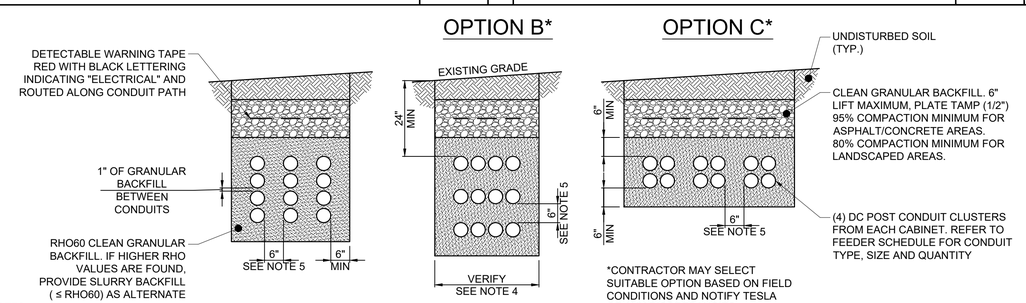

*CONTRACTOR MAY SELECT SUITABLE OPTION BASED ON FIELD CONDITIONS AND NOTIFY TESLA OF ANY DISCREPANCIES.

NOTES:

1. ANY EXCAVATION LEFT OPEN SHOULD BE SECURELY FENCED OFF. ALL TRENCHING SHALL BE ACCORDING TO THE LATEST OSHA STANDARDS.
2. ANY PAVEMENT DAMAGED DURING CONSTRUCTION SHALL BE REPAIRED OR REPLACED BY THE CONTRACTOR TO PRE-CONSTRUCTION CONDITIONS OR BETTER.
3. CONTRACTOR SHALL INSTALL CONDUITS BELOW LOCAL FROST LINE. SHOULD FIELD CONDITIONS VARY, CONTRACTOR SHALL COORDINATE WITH TESLA CONTACT LISTED ON SHEET T-1.
4. FIELD VERIFY WIDTH OF TRENCH REQUIRED. REFER TO SITE ELECTRICAL DRAWING FOR ROUTING.
5. DC POST CONDUIT DUCT BANK DESIGN BY TESLA BASED ON RHO60 SOIL TYPE & BACKFILL. CONTRACTOR SHALL FIELD VERIFY RHO VALUE AND PROVIDE SLURRY BACKFILL (≤ RHO60) IF VALUES HIGHER THAN RHO60 ARE FOUND.
6. THIS DETAIL REQUIRED FOR USE WITH 350MCM Al DC CONDUCTORS ONLY. WHEN INSTALLING 600 MCM Al DC CONDUCTORS, USE REQUIREMENTS DETAILED IN TYPICAL TRENCH DETAIL, THIS SHEET.

DC POST CONDUIT TRENCH DETAIL | N.T.S | 3

DETAIL NOT USED | N.T.S | 8

GPD GROUP
Professional Corporation
520 South Main Street, Suite 2531
Akron, OH 44311
330.572.2100 Fax 330.572.2101

TESLA
3600 DEER CREEK RD
PALO ALTO, CA 94304
(650) 681-5000

REV.	DATE	DESCRIPTION
A	09.01.22	ISSUED FOR SITE SKETCH REVIEW
B	09.22.22	ISSUED FOR 90% REVIEW
C	10.06.22	SIGNED AND SEALED

STEVEN P. SCHAUB
NEW MEXICO
21768
PROFESSIONAL ENGINEER
10/06/22

5161 LANG AVE NE
(TESLA SUPERCHARGER)
TRT18975 - ALBUQUERQUE, NM 87109

ELECTRICAL DETAILS

ISSUED FOR:	
PERMIT	XXX
BID	XXX
CONSTRUCTION	XXX
RECORD	XXX

INSTALL MANAGER	DESIGNER
BETH SORENSEN	RDV

JOB NO.
2022141.67

E-3

Drawing Name: O:\2022\2022141\67 - TRT 18975 - Albuquerque, NM - North Journal Center\dwg\2022141.67 - Albuquerque,NM - CD90.dwg
October 6, 2022 2:40 PM - MLogan

V3 SUPERCHARGER DATASHEET

V3 Supercharger Cabinet

AC INPUT (Electrical)		Input (V_{AC})	480	440	415	400	380
	Peak AC Input Power	Power (kVA)	387	354	334	322	306
	AC Input Voltage	380 V_{AC} – 480 V_{AC} (-5%, +10%), 4-wire 3AC+N					
	AC Input current	465 A_{AC} Max.					
	Frequency	50 Hz / 60 Hz					
	Power Factor	≥ 0.99					
	Current THD	< 3%					
	Voltage THD	< 2%					
AC INPUT (Mechanical)	Conductor Sizes	L1, L2, L3, N: 150 – 400 mm², 250 MCM – 750 MCM					
		PE: 10 – 70 mm², #8 AWG - 2/0					
	Conductor Material Type	L1, L2, L3, N: Cu, Al PE: Cu					
	Mfr. Termination Temp Rating	90° C					
SHARED DC BUS (ELECTRICAL)		Input (VAC)	480	440	415	400	380
	Max Rated DC Bus Power	Power (kW)	575	575	575	575	575
	Max Rated DC Bus Current	Current (A_{DC})	640	640	640	640	640
	DC Bus Voltage Range	880 - 1000 V_{DC}					
SHARED DC BUS (MECHNICAL)	Conductor Sizes	V+, V- (2x/pole): 150 – 300 mm², 250 MCM – 600 MCM					
		Mid: 16 – 150 mm², 6 AWG – 250 MCM					
		PE: 10 – 70 mm², #8 AWG - 2/0					
	Conductor Material Type	V+, V-, Mid: Cu, Al PE: Cu					
	Conductor Voltage Rating	1000 V					
	Mfr. Termination Temp Rating	90° C					
DC POST (ELETRICAL)	Max. Rated Post Power	250 kW					
	Post Rated Voltage Range	0-500 V_{DC}					
	Post Rated Current @T_a=35° C	Tesla Handle: 350 A_{DC}, CCS2 & GB Handle: 450 A_{DC}					
	Number of Charge Posts	1 - 4					
	Max Voltage Drop	10 V_{DC}					
DC POST (MECHANICAL)	Conductor Size	V+, V- (2x/pole): 350 MCM or 185 mm² AL (certified equipment wiring)					
		PE: 10 – 70 mm², #8 AWG - 2/0					
	Conductor Material Type	V+,V-: Al, Cu PE: Cu					
	Conductor Voltage Rating	1000 V					
	Mfr. Termination Temp Rating	90°C					
SYSTEM	Efficiency	96%					
PROTECTION	AC Input side: Class 1	DC Output side: Isolated DC Output					
	Over Voltage/Current/Temperature, Surge Protection, Isolation Monitoring						
	Short-Circuit Protection	External Electronic Trip Circuit Breaker					
	Short Circuit Current Rating	85 kA RMS symmetrical					
ENVIRONMENTAL	Operating Temperature	-30°C to 50°C, -22°F to 122°F					
	Ingress Protection	IP66 (Cabinet), IP2X (Cooling)					
	Ventilation Requirements	Ventilation Not Required					
NOISE	Typical noise at 1m	35 dB(A)					
STANDARDS	UL 2202, CSA C22.2#107.1, FCC, ICES-003-B, IEC 61851-1, EN 61000-6-2 EN 55011, GB/T 18487.1, GB/T 27930, NB/T 33008.1, NB/T 33001						
LAYOUT	Max. Distance to Charge Post	100 m, 340 ft.					
WEIGHT	Supercharger Cabinet Weight	4 Post Cabinet: 1110 kg (2448 lbs)					
		3 Post Cabinet: 1039kg (2291 lbs)					
DIMENSIONS	Depth, Width, Height	1000, 1250, 2200 mm; 39 12/32, 49 7/8, 86 20/32 in.					
MOUNTING	Per-anchor min. Shear Strength	4 kN					
	Per-anchor min. Tension Strength	11 kN					

V3 Supercharger Charge Post

POST INPUT/OUPUT (ELECTRICAL)	Max. Rated Post Power	250 kW
	Post Rated Voltage Range	0 - 500 V_{DC}
	Post Rated Current @Ta=35° C	Tesla Handle: 350 A_{DC}, CCS2 & GB Handle: 450 A_{DC}
DC INPUT (MECHANICAL)	Power Conductors	V+, V- (2x/pole): 350 MCM or 185 mm² AL (certified equipment wiring)
	PE Conductor	PE: 25 – 50 mm², 3 AWG – 2/0
	Conductor Material Type	V+, V- : Al, Cu PE: Al, Cu
	Conductor Voltage Rating	1000 V
	Mfr. Termination Temp Rating	90° C
PROTECTION	Over Current/Temperature, Uneven Current Split	
ENVIRONMENTAL	Operating Temperature	-40°C to 50°C, -40°F to 122°F
	Ingress Protection	IP44
STANDARDS	UL 2202, CSA 22.2#107.1-16, FCC, ICES-003, EN 61000-6-2, EN 61000-6-4, IEC 61851-1, IEC 61851-23, GB/T 18487.1, GB/T 27930, GB/T 20234.1, GB/T 20234.3, GB/T 34658	
LAYOUT	Max. Distance to Cabinet	100 m, 340 ft.
WEIGHT	Charge Post Weight	64 kg, 140 lbs.
DIMENSIONS	Depth, Width, Height	250, 810, 1687 mm; 9 27/32, 31 7/8, 66 13/32 in.
MOUNTING	Per-anchor min. Shear Strength	1 kN
	Per-anchor min. Tension Strength	11 kN

TESLA
3600 DEER CREEK RD
PALO ALTO, CA 94304
(650) 681-5000

REV.	DATE	DESCRIPTION
A	09.01.22	ISSUED FOR SITE SKETCH REVIEW
B	09.22.22	ISSUED FOR 90% REVIEW
C	10.06.22	SIGNED AND SEALED

FOR REFERENCE ONLY

5161 LANG AVE NE
(TESLA SUPERCHARGER)
TRT18975 - ALBUQUERQUE, NM 87109

TESLA DATASHEET

ISSUED FOR:	
PERMIT	XXX
BID	XXX
CONSTRUCTION	XXX
RECORD	XXX

INSTALL MANAGER	DESIGNER
BETH SORENSEN	RDV

JOB NO.
2022141.67

-

Drawing Name: O:\2022\2022141\67 - TRT 18975 - Albuquerque, NM - North Journal Center\dwg\2022141.67 - Albuquerque,NM - CD00.dwg
Plotted by: MLogan
October 6, 2022 2:40 PM - MLogan