CITY OF ALBUQUERQUE

LOCATION MAP

SCALE IN FEET

0 1000 2000

N W E S

CIVIL PLAN ABBREVIATIONS:

AC	ACRE	CJ	CONTROL JOINT	EOF	EMERGENCY OVERFLOW	GL	GUTTER LINE	IPS	IRON PIPE SIZE	NWL	NORMAL WATER LEVEL	RCP	REINFORCED CONCRETE PIPE	THRU	THROUGH
ADA	AMERICANS WITH DISABILITIES ACT	CL	CENTERLINE	EQ	EQUAL	GPM	GALLONS PER MINUTE	J-BOX	JUNCTION BOX	OC	ON CENTER	RD	ROOF DRAIN	TNFH	TOP NUT OF FIRE HYDRANT
ADD	ADDENDUM	CMP	CORRUGATED METAL PIPE	EX	EXISTING	GV	GATE VALVE	JT	JOINT	OCEW	ON CENTER EACH WAY	REBAR	REINFORCING BAR	TRANS	TRANSFORMER
AFF	ABOVE FINISHED FLOOR	CO	CLEANOUT	FDC	FIRE DEPARTMENT CONNECTION	HDPE	HIGH DENSITY POLYETHYLENE	LF	LINEAR FEET	OH	OVERHEAD	REM	REMOVE	TV	TELEVISION
AGG	AGGREGATE	CONC	CONCRETE	FDN	FOUNDATION	HD	HEAVY DUTY	LIN	LINEAR	OHD	OVERHEAD DOOR	ROW	RIGHT OF WAY	T/W	TOP OF WALL
APPROX	APPROXIMATE	CONST	CONSTRUCTION	FES	FLARED END SECTION	HH	HANDHOLE	LPS	LOW PRESSURE STEAM	OZ	OUNCE	R/W	RIGHT OF WAY	TYP	TYPICAL
ARCH	ARCHITECT, ARCHITECTURAL	CONT	CONTINUOUS	FFE	FINISHED FLOOR ELEVATION	HORIZ	HORIZONTAL	LS	LUMP SUM	PED	PEDESTAL, PEDESTRIAN	SAN	SANITARY	UT	UTILITY, UNDERGROUND
BFE	BASEMENT FLOOR ELEVATION	CY	CUBIC YARD	FPM	FEET PER MINUTE	HR	HOUR	LSO	LOWEST STRUCTURAL OPENING	PERF	PERFORATED	SCH	SCHEDULE		TELEPHONE
BIT	BITUMINOUS	C&G	CURB AND GUTTER	FPS	FEET PER SECOND	HWL	HIGH WATER LEVEL	MAX	MAXIMUM	PL	PROPERTY LINE	SF	SQUARE FOOT	VCP	VITRIFIED CLAY PIPE
CAD	COMPUTER-AIDED DESIGN	DEMO	DEMOLITION	FT	FOOT, FEET	HWY	HIGHWAY	MB	MAIL BOX	PP	POLYPROPYLENE	SPEC	SPECIFICATION	W/O	WITHOUT
CB	CATCH BASIN	DIA	DIAMETER	FTG	FOOTING	HYD	HYDRANT	MECH	MECHANICAL	PSI	POUNDS PER SQUARE INCH	SQ	SQUARE	W/	WITH
CFS	CUBIC FEET PER SECOND	DIM	DIMENSION	GA	GAUGE	I	INVERT	MH	MANHOLE	PVC	POLYVINYL CHLORIDE	STA	STATION	YD	YARD
CF	CUBIC FOOT	DS	DOWNSPOUT	GAL	GALLON	ID	INSIDE DIAMETER	MIN	MINIMUM	PVMT	PAVEMENT	SY	SQUARE YARD	YR	YEAR
CI	CAST IRON	EA	EACH	GALV	GALVANIZED	IN	INCH	MISC	MISCELLANEOUS	QTY	QUANTITY	T/C	TOP OF CURB		
CIP	CAST IRON PIPE	ELEC	ELECTRICAL	GC	GENERAL CONTRACTOR	INV	INVERT	NO	NUMBER	R	RIM	TEL	TELEPHONE		
CIPC	CAST IN PLACE CONCRETE	ELEV	ELEVATION	GFE	GARAGE FLOOR ELEVATION	IP	IRON PIPE	NTS	NOT TO SCALE	RAD	RADIUS	TEMP	TEMPORARY		

PROJECT BACKGROUND - IDO ZONE DISTRICT NR-LM, WITHIN CPO-10 NORTH I-25 OVERLAY

1. Clarify in detail how all Use Specific standards for Self-Storage, Light/Heavy Vehicle & Equipment sales, rental, fueling, and repair are being met. See IDO 4-3 and reference each use specific-standards and how they are met.
ISG Response: Please see the applications sections of the IDO copied below with our responses to each requirement on how the proposed site is compliant.

4-3(D)(17) Heavy Vehicle and Equipment Sales, Rental, Fueling, and Repair

i. 4-3(D)(17)(a) This use must comply with stormwater quality requirements found in the DPM.
ISG Response: This use complies with stormwater quality requirements found in the DPM. The grading and drainage plans along with stormwater design for this project has been approved by city staff.

ii. 4-3(D)(17)(b) The lot must be graded and surfaced pursuant to DPM standards and shall be maintained in a level and serviceable condition.
ISG Response: We have created a site grading and erosion control plan and will acquire all applicable permits needed and grad the site to development standards.

iii. 4-3(D)(17)(c) This use must be screened as required by Subsection 14-16-5- 6(G)(4) (Outdoor Storage Areas for Vehicles, Equipment, and Materials). The Planning Director may require a taller wall, fence, or vegetative screen to provide an adequate buffer for an abutting Residential zone district or lot containing a residential use in any Mixed-use zone district from the reasonably anticipated visual or noise impacts of this use.
ISG Response: Not applicable as no adjacent site contains a residential use.

iv. 4-3(D)(17)(d) For fueling station canopies, all under-canopy lighting shall be recessed so that no light lens projects below the canopy ceiling. The canopy fascia shall not be internally illuminated.
ISG Response: No fueling station canopies are proposed on this project.

v. 4-3(D)(17)(e) Vehicle repair, servicing, and maintenance shall be conducted within fully enclosed portions of a building.
ISG Response: No vehicle repair, servicing or maintenance are proposed as a use on this project.

vi. 4-3(D)(17)(f) Any building that contains vehicle repair, servicing, and maintenance is prohibited within 25 feet in any direction of any Residential zone district or lot containing a residential use in any Mixed-use zone district.
ISG Response: This site is over 25-ft of any residential use in any direction.

vii. 4-3(D)(17)(g) If located within 330 feet of any Residential zone district, this use shall require a Conditional Use Approval pursuant to Subsections 14-16-5-2(E) and 14-16-6-6(A).
ISG Response: This is not appliable as the closest residential property is a little over 500-ft away from the closest edge of the subject site.

viii. 4-3(D)(17)(h) This use is prohibited within 330 feet in any direction of Major Public Open Space.
ISG Response: Not applicable as the site is not within 330-ft of any major public open space.

ix. 4-3(D)(17)(i) A cumulative impacts analysis may be required at the time of application submittal for projects within the Railroad and Spur Small Area, pursuant to Subsections 14-16-5-2(E) (Cumulative Impacts) and 14-16-6-4(H) (Cumulative Impacts Analysis Requirements).
ISG Response: Not applicable as the site is not within this area.

4-3(D)(29) Self-storage

i. 4-3(D)(29)(a) All storage shall be within fully enclosed portions of a building.
ISG Response: Site programs with this requirement as all buildings provide fully enclosed storage units.

ii. 4-3(D)(29)(b) Security fencing shall not include razor wire or barbed wire.
ISG Response: Fencing does not include razor wire or barbed wire.

iii. 4-3(D)(29)(c) Abutting any Residential zone district or lot containing a residential use in any Mixed-use zone district, an opaque wall or fence at least 6 feet and no more than 8 feet high or a landscape buffer at least 50 feet wide shall be provided along the abutting lot line.
ISG Response: This is not appliable as the closest residential property is a little over 500-ft away from the closest edge of the subject site.

iv. 4-3(D)(29)(d) Within 100 feet in any direction of any Residential zone district or lot containing a residential use in any Mixed-use zone district, public access to any storage units is prohibited between 10:00 P.M. and 7:00 A.M.
ISG Response: This is not appliable as the closest residential property is a little over 500-ft away from the closest edge of the subject site.

v. 4-3(D)(29)€ Within 200 feet in any direction of any Residential zone district, internal lighting that is visible from the property line shall not exceed the maximum light trespass values listed in Table 5-8-3 for lighting designation Lz1 during the outdoor lighting curfew.
ISG Response: This is not appliable as the closest residential property is a little over 500-ft away from the closest edge of the subject site.

vi. 4-3(D)(29)(f) In the MX-L, MX-M, MX-H, and MX-FB zone districts, and on lots in the NR-C zone district within a UC-AC-MS-PT area, access to individual storage units shall be through interior corridors; direct access to individual units from outdoor areas is not allowed.
ISG Response: This is not applicable as the property is zoned NR-LM.

vii. 4-3(D)(29)(g) In the NR-C zone district outside of UC-AC-MS-PT areas, exterior doors to individual storage units shall not face any abutting street frontage, or, if the site is located on a corner lot, shall not face the primary street frontage.
ISG Response: This is not applicable as the property is zoned NR-LM.

2. An outdoor seating area is required for a primary building(s) more than 30,000 s.f
ISG Response: This is located in the NE corner of the proposed 3-story building shown on Sheet C3-10.

PROJECT ADDRESS:

8200 JEFFERSON STREET NE
ALBUQUERQUE, NM

SITE SUMMARY

ZONING:	NR-LM
HEAVY VEHICLE AND EQUIPMENT RENTAL AREA:	4,603 SF
SELF-STORAGE BUILDING SELF-STORAGE AREA:	117,826 SF
U-BOX BUILDING SELF-STORAGE AREA:	23,367 SF
MINI-STORAGE BUILDING SELF-STORAGE AREA:	9,425 SF

PARKING REQUIREMENTS (PER ALBUQUERQUE IDO)

TYPE	UNIT / AREA	STALLS REQUIRED	STALLS PROVIDED
HEAVY VEHICLE AND EQUIPMENT RENTAL:	1 / 1,000 SF GFA	5 SPACES (4,603 / 1000 = 4.6)	5
SELF-STORAGE AREA:	1 / 3,000 SF GFA	50 SPACES (150,618 / 3,000 = 50.2)	50
ADA (ACCESSIBLE):		3 SPACES FOR 51-75 SPACES	3
BICYCLE:	3 SPACES OR 10% OF REQ. OFF-STREET PARKING SPACES, WHICHEVER IS GREATER (55 * 10% = 5.5)		3
MOTORCYCLE:	3 SPACES FOR 51-100 REQ. OFF-STREET PARKING SPACES		6
	TOTAL:	55	55

SETBACKS

	BUILDING
FRONT YARD	15'-0"
SIDE YARD	5'-0"
REAR YARD	15'-0"

PROJECT GENERAL NOTES

1. ALL WORK SHALL CONFORM TO THE CONTRACT DOCUMENTS, WHICH INCLUDE, BUT ARE NOT LIMITED TO, THE OWNER - CONTRACTOR AGREEMENT, THE PROJECT MANUAL (WHICH INCLUDES GENERAL SUPPLEMENTARY CONDITIONS AND SPECIFICATIONS), DRAWINGS OF ALL DISCIPLINES AND ALL ADDENDA, MODIFICATIONS AND CLARIFICATIONS ISSUED BY THE ARCHITECT/ENGINEER.
2. CONTRACT DOCUMENTS SHALL BE ISSUED TO ALL SUBCONTRACTORS BY THE GENERAL CONTRACTOR IN COMPLETE SETS IN ORDER TO ACHIEVE THE FULL EXTENT AND COMPLETE COORDINATION OF ALL WORK.
3. WRITTEN DIMENSIONS TAKE PRECEDENCE OVER SCALED DIMENSIONS. NOTIFY ARCHITECT/ENGINEER OF ANY DISCREPANCIES OR CONDITIONS REQUIRING INFORMATION OR CLARIFICATION BEFORE PROCEEDING WITH THE WORK.
4. FIELD VERIFY ALL EXISTING CONDITIONS AND DIMENSIONS. NOTIFY ARCHITECT/ENGINEER OF ANY DISCREPANCIES OR CONDITIONS REQUIRING INFORMATION OR CLARIFICATION BEFORE PROCEEDING WITH THE WORK.
5. DETAILS SHOWN ARE INTENDED TO BE INDICATIVE OF THE PROFILES AND TYPE OF DETAILING REQUIRED THROUGHOUT THE WORK. DETAILS NOT SHOWN ARE SIMILAR IN CHARACTER TO DETAILS SHOWN. WHERE SPECIFIC DIMENSIONS, DETAILS OR DESIGN INTENT CANNOT BE DETERMINED, NOTIFY ARCHITECT/ENGINEER BEFORE PROCEEDING WITH THE WORK.
6. ALL MANUFACTURED ARTICLES, MATERIALS AND EQUIPMENT SHALL BE APPLIED, INSTALLED, CONNECTED, ERECTED, CLEANED AND CONDITIONED ACCORDING TO MANUFACTURERS' INSTRUCTIONS. IN CASE OF DISCREPANCIES BETWEEN MANUFACTURERS' INSTRUCTIONS AND THE CONTRACT DOCUMENTS, NOTIFY ARCHITECT/ENGINEER BEFORE PROCEEDING WITH THE WORK.
7. ALL DISSIMILAR METALS SHALL BE EFFECTIVELY ISOLATED FROM EACH OTHER TO AVOID GALVANIC CORROSION.
8. THE LOCATION AND TYPE OF ALL INPLACE UTILITIES SHOWN ON THE PLANS ARE FOR GENERAL INFORMATION ONLY AND ARE ACCURATE AND COMPLETE TO THE BEST OF THE KNOWLEDGE OF I & S GROUP, INC. (ISG). NO WARRANTY OR GUARANTEE IS IMPLIED. THE CONTRACTOR SHALL VERIFY THE SIZES, LOCATIONS AND ELEVATIONS OF ALL INPLACE UTILITIES PRIOR TO CONSTRUCTION. CONTRACTOR SHALL IMMEDIATELY NOTIFY ENGINEER OF ANY DISCREPANCIES OR VARIATIONS FROM PLAN.
9. THE CONTRACTOR IS TO CONTACT "NEW MEXICO ONE CALL" FOR UTILITY LOCATIONS, MINIMUM 2 BUSINESS DAYS PRIOR TO ANY EXCAVATION / CONSTRUCTION (811).

SPECIFICATIONS REFERENCE

ALL CONSTRUCTION SHALL COMPLY WITH THE CITY OF ALBUQUERQUE REQUIREMENTS.

PROJECT DATUM

HORIZONTAL COORDINATES HAVE BEEN REFERENCED TO THE NORTH AMERICAN DATUM OF 1983 (NAD83), ON THE NEW MEXICO STATE PLANE, CENTRAL ZONE IN U.S. SURVEY FEET AS MEASURED ALONG THE NORTHWEST LINE OF THE SUBJECT PROPERTY WHICH BEARS N 17°16'54" E PER GPS COORDINATE OBSERVATIONS.
LATITUDE = 35°10'35.9250"
LONGITUDE = -106°35'34.8662"
CONVERGENCE ANGLE = 00°11'51.4113"

ELEVATIONS HAVE BEEN REFERENCED TO THE NORTH AMERICAN VERTICAL DATUM OF 1988 (NAVD 88). ELEVATIONS ESTABLISHED WITH GPS STATIC OBSERVATIONS WITH ORIGINATING BENCHMARK CITY OF ALBUQUERQUE VETICAL CONTROL MONUMENT G-442.

RTK GPS METHODS WERE USED TO ESTABLISH HORIZONTAL AND VERTICAL COORDINATES FOR THIS PROJECT.

TOPOGRAPHIC SURVEY

THIS PROJECT'S TOPOGRAPHIC SURVEY CONSISTS OF DATA COLLECTED IN NOVEMBER 2021 BY BLEW & ASSOCIATES, PA (479-443-4506)

B.M. ELEVATION= 5127.87
ALUMINIUM CAP "NM DOT" (ADJACENT TO PASEO DEL NORTE IN SW CORNER OF LOT)
N: 1519065.87 / E: 1538067.67

LEGEND

EXISTING

CITY LIMITS
SECTION LINE
QUARTER SECTION LINE
RIGHT OF WAY LINE
PROPERTY / LOTLINE
EASEMENT LINE
ACCESS CONTROL
WATER EDGE
WETLAND BOUNDARY
WETLAND / MARSH
FENCE LINE
CULVERT
STORM SEWER
SANITARY SEWER
SANITARY SEWER FORCEMAIN
WATER
GAS
OVERHEAD ELECTRIC
UNDERGROUND ELECTRIC
UNDERGROUND TELEPHONE
UNDERGROUND TV
OVERHEAD UTILITY
UNDERGROUND UTILITY
UNDERGROUND FIBER OPTIC
CONTOUR (MAJOR)
CONTOUR (MINOR)
DECIDUOUS TREE
CONIFEROUS TREE
TREE LINE
MANHOLE/STRUCTURE
CATCH BASIN
HYDRANT
VALVE
CURB STOP
POWER POLE
UTILITY PEDESTAL / CABINET

PROPOSED

LOT LINE
RIGHT OF WAY
EASEMENT
CULVERT
STORM SEWER
STORM SEWER (PIPE WIDTH)
SANITARY SEWER
SANITARY SEWER (PIPE WIDTH)
WATER
GAS
OVERHEAD ELECTRIC
UNDERGROUND ELECTRIC
UNDERGROUND TV
CONTOUR
MANHOLE (STORM, SANITARY)
CATCH BASIN
HYDRANT
VALVE

CIVIL SHEET INDEX

SHEET INDEX

C0-10 SITE DATA
C0-20 SITE DETAILS
C0-21 SITE DETAILS
C0-22 SITE DETAILS
C1-10 SWPPP NOTES
C1-20 SWPPP DETAILS
C1-30 PRE-CONSTRUCTION SWPPP
C1-40 PROPOSED SWPPP
C2-10 EXISTING SITE AND REMOVAL PLAN
C3-10 SITE PLAN
C3-20 UTILITY PLAN
C3-21 UTILITY PROFILES AND SCHEDULES
C4-10 GRADING PLAN
C4-11 DETAILED GRADING PLAN
C4-12 DETAILED GRADING PLAN
C4-13 DETAILED GRADING PLAN
C5-10 ALTERNATIVE RESTORATION PLAN
C5-11 ALTERNATIVE PLANTING PLAN
C5-30 PLANTING NOTES AND DETAILS
C6-10 SITE PHOTOMETRIC

SHEET NOTES:

REVISIONS:

NO.	DATE	INITIALS	NOTES
1	10/30/2024	ARA	CITY SUBMITTAL #1
2	08/26/2025	ARA	CITY SUBMITTAL #2
3			
4			
5			
6			
7			
8			

PROFESSIONAL SEAL:

RYAN J. ANDERSON
NEW MEXICO
28792
PROFESSIONAL ENGINEER

08/26/2025

ISG

THIS DOCUMENT IS THE PROPERTY OF I & S GROUP, INC. AND MAY NOT BE USED, COPIED OR DUPLICATED WITHOUT PRIOR WRITTEN CONSENT.

SHEET NOT VALID UNLESS THIS TEXT IS COLOR.

PROJECT

U-HAUL
PR-2023-008710

ALBUQUERQUE NEW MEXICO

SITE ADDRESS:
U-Haul Moving & Storage
8200 JEFFERSON ST

SHEET CONTENTS:

SITE DATA

824071

DRAWN:	GBV	**C0-10**
CHECKED:	ARA	
DATE:	--/--/--	

C0-TITLE

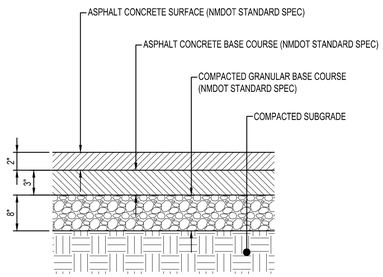

HEAVY DUTY
ASPHALT PAVEMENT
NTS

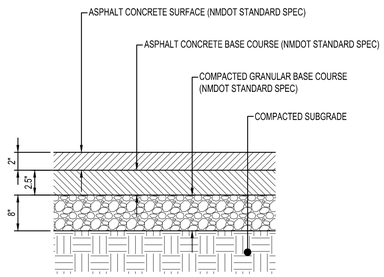

STANDARD
ASPHALT PAVEMENT
NTS

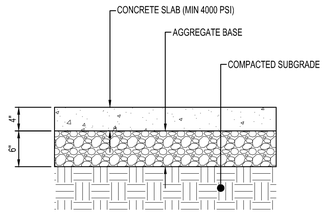

CONCRETE SIDEWALK
NTS

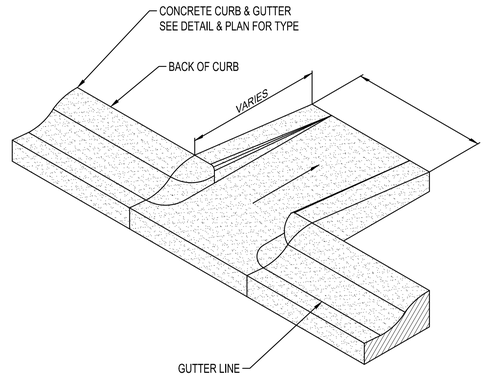

FLUME CURB CUT
NTS

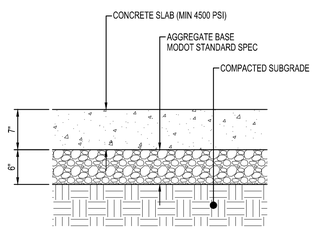

STANDARD
CONCRETE PAVEMENT
NTS

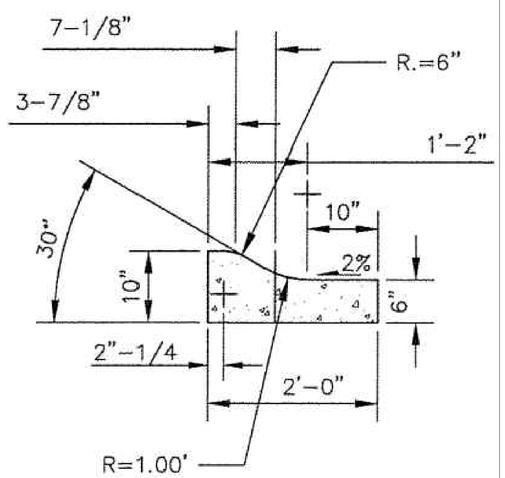

4" CONCRETE ROLLED CURB
NTS

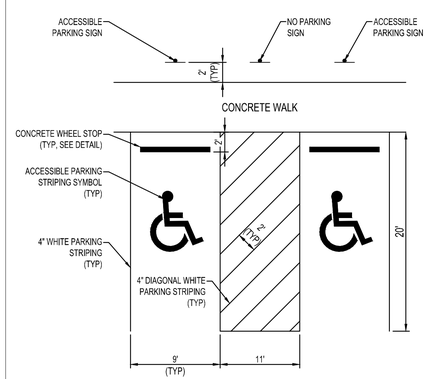

ACCESSIBLE PARKING AREA
NTS

SHEET NOTES:

REVISIONS:

NO.	DATE	INITIALS	NOTES
1	10/30/2024	ARA	CITY SUBMITTAL #1
2	08/26/2025	ARA	CITY SUBMITTAL #2
3			
4			
5			
6			
7			
8			

PROFESSIONAL SEAL:

RYAN J. ANDERSON
NEW MEXICO
28792
PROFESSIONAL ENGINEER

08/26/2025

ISG

THIS DOCUMENT IS THE PROPERTY OF I & S GROUP, INC. AND MAY NOT BE USED, COPIED OR DUPLICATED WITHOUT PRIOR WRITTEN CONSENT.

SHEET NOT VALID UNLESS THIS TEXT IS COLOR.

PROJECT

U-HAUL

PR-2023-008710

ALBUQUERQUE NEW MEXICO

SITE ADDRESS:
U-Haul Moving & Storage
8200 JEFFERSON ST

SHEET CONTENTS:

SITE DETAILS

824071

DRAWN:	GBV	**C0-20**
CHECKED:	ARA	
DATE:	--/--/--	

C0-DETAILS

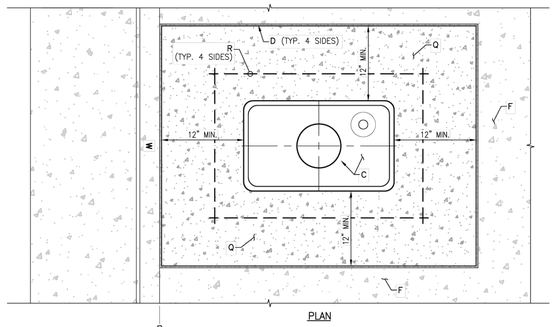

PLAN

SERVICE LINE FOR 1-1/2" TO 2" METER

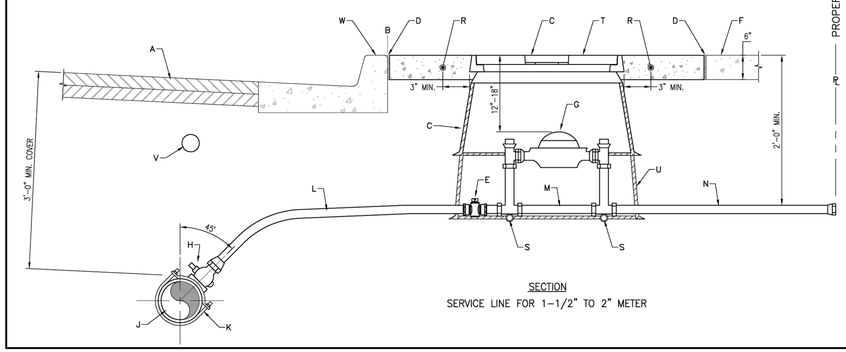

SECTION

SERVICE LINE FOR 1-1/2" TO 2" METER

PROPERTY LINE

GENERAL NOTES

1. METER BOX LOCATION TO CONFORM TO STANDARD DRAWING 2361.
2. THE (PRIVATE) TAILPIECE IS TO BE INSTALLED BY THE CONTRACTOR AND IS TO BE OWNED AND MAINTAINED BY THE CUSTOMER PER WATER AUTHORITY ORDINANCE.

CONSTRUCTION NOTES

A. STREET SURFACE
B. BACK OF CURB
C. METER BOX, COVER AND LID, SEE DRAWING 2367. COVER FLUSH WITH SURFACE AND CENTERED OVER METER REGISTER
D. 1/2" EXPANSION JOINT
E. CURB STOP, LOCATE INSIDE METER BOX.
F. SIDEWALK OR DRIVEPAD
G. METER. TOP OF METER TO BE 12" TO 18" BELOW COVER.
H. CORP STOP
J. MAIN WATER LINE
K. TAPPING SADDLE
L. COPPER SERVICE LINE
M. COPPER SETTER. PROVIDE WITH DUAL CHECK VALVE IN PRESSURE ZONES 0W, 1W, 1E, AND FOR PRIVATE WELLS. SEE SPECIFICATION SECTION 802.3.9 FOR PRIVATE WELL PROVISIONS.
N. TAILPIECE 3 FT LONG, APPROVED COPPER TUBING WITH A CLEAN CUT AT END AND WITH A TEMPORARY PLUG. DUAL CHECK VALVE SHALL BE INSTALLED IN WATER ZONES 0W, 1W, 1E AND FOR PRIVATE WELLS. SEE SPECIFICATION SECTION 802.3.9 FOR PRIVATE WELL PROVISIONS.
Q. CONCRETE PAD REQUIRED IN ALL AREAS PER SECTION 101. EXTERIOR CONCRETE, f'c = 3000 psi AT 28 DAYS.
R. #4 REBAR CONTINUOUS ALL AROUND METER BOX.
S. STABILIZER BAR. 1/2" X 12" LONG GALVANIZED STEEL PIPE.
T. METER BOX LID SHALL BE FLUSH WITH SURROUNDING SIDEWALK.
U. METER BOX EXTENSION AS REQUIRED.
V. ELECTRONIC MARKER DEVICE (EMD). SEE STANDARD SPECIFICATION SECTION 170.
W. 3" TALL "W" STAMP ON CURB WHERE SERVICE LINE CROSSES.

REVISIONS	WATER AUTHORITY
JAN. 2011	WATER 1-1/2" TO 2" METERED SERVICE LINE INSTALLATION DWG. 2363 MAY 2019

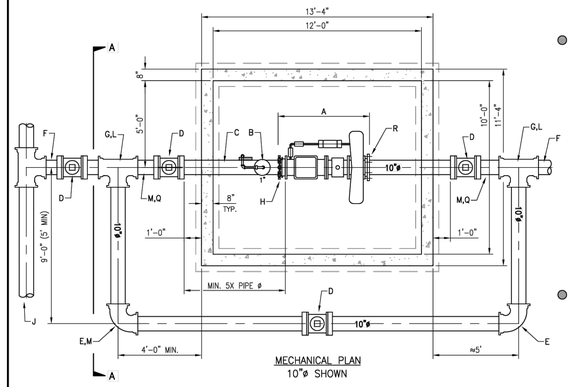

MECHANICAL PLAN

10"ø SHOWN

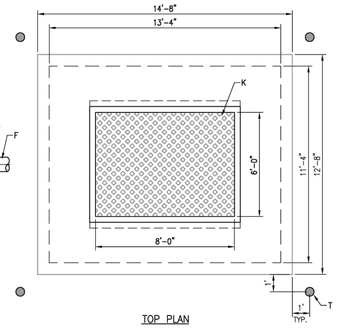

TOP PLAN

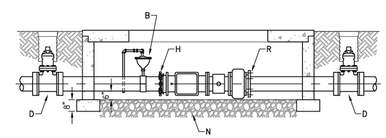

LONGITUDINAL SECTION

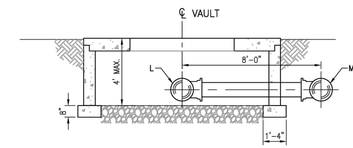

SECTION A-A

GENERAL NOTES

1. THIS IS A TYPICAL STANDARD DETAIL TO BE USED AS REFERENCE. THE ENGINEER IS RESPONSIBLE FOR DESIGNING AND PUBLISHING DIMENSIONED AND SCALED DETAILS SPECIFIC TO A PROJECT, USING THE NECESSARY CALCULATIONS AND DEVELOPING SPECIFICATIONS TO SUPPORT THE DESIGN AND THE ENGINEER-STAMPED CONTRACT DOCUMENTS.
2. VAULT NOT TO BE PLACED IN TRAFFIC AREAS.
3. THE MAXIMUM DEPTH IS 4 FT FROM FINISH FLOOR TO ROOF HATCH. IF NEW VAULT IS CONSTRUCTED AROUND EXISTING PIPING THAT IS AT GREATER DEPTH, EXCAVATE AND BRING PIPING UP THE CORRECT GRADE USING VERTICAL BENDS.
4. PRECAST CONCRETE VAULT MAY BE USED IN LIEU OF CMU. CONSTRUCTION WITH WATER AUTHORITY APPROVAL. SUBMIT DETAILS FOR REVIEW.
5. COMPRESSIVE STRENGTH OF ALL CONCRETE SHALL BE 3000 PSI PER EXTERIOR CONCRETE SPEC SEC. 101.
6. COMPACT SUBGRADE UNDER AND 12" EITHER SIDE OF FOOTING TO 95% MAXIMUM DENSITY, PER ASTM D-1557 TO 6" MIN. DEPTH.
7. NO BYPASS IS TO BE INSTALLED FOR IRRIGATION WATER USES. (PARKS, MEDIANS, LANDSCAPING, ETC.)
8. DO NOT CONSTRUCT DRAIN POCKETS WHEN CONSTRUCTING IN SHALLOW GROUNDWATER CONDITIONS. ENGINEER SHALL PROVIDE A WATERPROOF MANHOLE OR VAULT DESIGN FOR APPROVAL BY THE WATER AUTHORITY PRIOR TO INSTALLATION.
9. FILL PIPE PENETRATION VOIDS WITH NON-SHRINK GROUT OR WATER AUTHORITY APPROVED EQUAL.

CONSTRUCTION NOTES

A. METER LAY LENGTH, VARIES WITH METER SIZE AND MAY INCLUDE BY-PASS, CHECK VALVE AND STRAINER. METER ASSEMBLY TO BE PROVIDED AND INSTALLED BY THE WATER AUTHORITY.
B. 1" SADDLE TAP, 1" GATE VALVE AND 1" AIR RELEASE VALVE. AIR RELEASE VALVE SHALL BE APCO MODEL NO. 200A OR APPROVED EQUAL.
C. D.I. SPOOL (FLxPE) LENGTH AS REQUIRED. MINIMUM LENGTH SHALL BE 5 TIMES THE PIPE DIAMETER.
D. GATE VALVE (MJ) WITH MEGALUGS AND VALVE BOX PER STANDARD DRAWING 2326.
E. 90° ELBOW (MJ) WITH MEGALUGS
F. MAIN SERVICE LINE MUST BE DUCTILE IRON PIPE FROM MAIN DISTRIBUTION LINE THROUGH METER VAULT PIPING ASSEMBLY.
G. MJ TEE WITH MEGALUGS
H. MEGA-FLANGE FLANGE ADAPTER, SERIES 2100 AS MANUFACTURED BY EBAA IRON SALES, OR APPROVED EQUAL.
J. MAIN DISTRIBUTION LINE
K. 4'-0" x 6'-0" ALUMINUM FLOOR DOOR, WITH SPRING OPEN ASSIST HINGE, BILCO TYPE JD OR APPROVED EQUAL.
L. ROLL TEE UP AS REQUIRED
M. ROLL 90° ELBOW DOWN AS REQUIRED
N. 3/4" GRAVEL FILL PER ASTM C33, NO. 57 GRAVEL, 12" DEPTH
O. D.I. PIPE (FLxPE) LENGTH AS REQUIRED
R. FLANGE COUPLING ADAPTER (FCA)
T. 6" CONCRETE FILLED GUARD POST, TYPICAL OF 4 WHEN REQUIRED BY OWNER. SEE STANDARD DWG 2322

REVISIONS	WATER AUTHORITY
APR. 2015	WATER LARGE DIAMETER METER VAULT 8" TO 12" SERVICE DWG. 2371 AUG. 2019

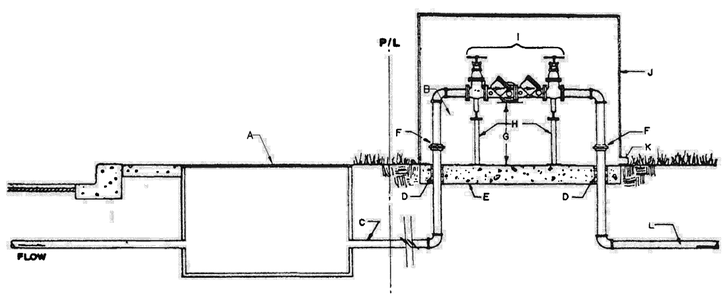

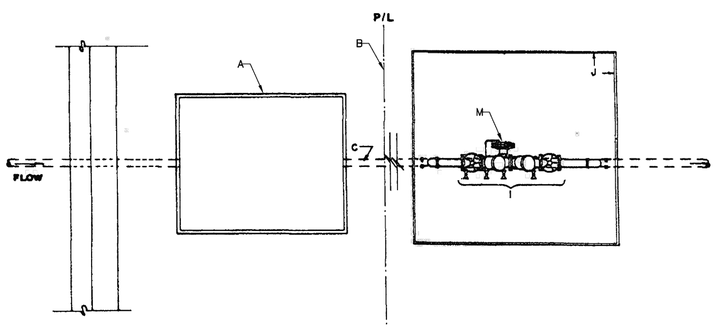

PLAN

GENERAL NOTES:

1. HORIZONTAL RPBA INSTALLATION REQUIRED.
2. ABOVE GRADE RPBA INSTALLATION REQUIRED.
3. WATER LINE PRESSURE AND TEMPERATURE MUST NOT EXCEED RATED CAPACITY OF RPBA.
4. PROTECT FROM FREEZING WITH POSITIVE HEAT SOURCE AND INSULATION.
5. MINIMUM RPBA SIZE MUST BE THE BUILDING SERVICE LINE SIZE.
6. DO NOT INSTALL IN FLOOD PRONE AREAS OR IN STORM RETENTION OR DETENTION BASINS.
7. INSTALL WATER HAMMER ARRESTORS & THERMO EXPANSION PROTECTION, AS NECESSARY.
8. METALLIC RISER PIPING REQUIRED.
9. JOINTS TO BE ADEQUATELY RESTRAINED.
10. DEVIATIONS FROM THESE SPECIFICATIONS MUST HAVE PRIOR WRITTEN APPROVAL FROM THE WATER AUTHORITY CROSS CONNECTION OFFICE.
11. THE INSTALLATION OF A BACKFLOW ASSEMBLY MAY CREATE A CLOSED LOOP SYSTEM. THE CUSTOMER IS RESPONSIBLE FOR COMPLIANCE WITH CURRENT PLUMBING CODES WHICH MAY REQUIRE INSTALLATION OF (PRIVATE) PRESSURE RELIEF DEVICES AND/OR EXPANSION TANKS.

CONSTRUCTION NOTES:

A. METER BOX PER STANDARD DRAWING 2362 OR 2363.
B. PROPERTY LINE.
C. SERVICE LINE WITHOUT TAPS OR TEES BETWEEN THE METER AND THE BACKFLOW PREVENTION ASSEMBLY.
D. ADEQUATE SLEEVE & INSULATION. INSULATION SHALL BE (AT MINIMUM) 1" THICK.
E. MINIMUM 4" CONCRETE (3000 PSI) SLAB.
F. UNIONS OR FLANGED FITTINGS INSTALLED A MINIMUM OF 4" ABOVE GRADE.
G. 36" MAXIMUM, 12" MINIMUM (FROM LOWEST POINT OF ASSEMBLY TO TOP OF CONCRETE SLAB).
H. PROVIDE ADJUSTABLE METALLIC SUPPORTS ON UNITS 2.5" AND GREATER DIAMETER (TYPICAL).
I. USC APPROVED RPBA, AS SHOWN
J. PROTECTIVE ENCLOSURE, SEE STANDARD DRAWING 2389 FOR DESIGN CRITERIA.
K. DRAIN: SIZE DRAIN TO HANDLE FULL DISCHARGE OF RELIEF VALVE. DRAIN TO DAYLIGHT. SCREEN RECOMMENDED TO PREVENT RODENT AND INSECT ENTRY.
L. BUILDING SERVICE LINE.
M. RELIEF VALVE.

REVISIONS	WATER AUTHORITY
	WATER REDUCED PRESSURE PRINCIPLE BACKFLOW PREVENTION ASSEMBLY (RPBA) DWG. 2385 JANUARY 2011

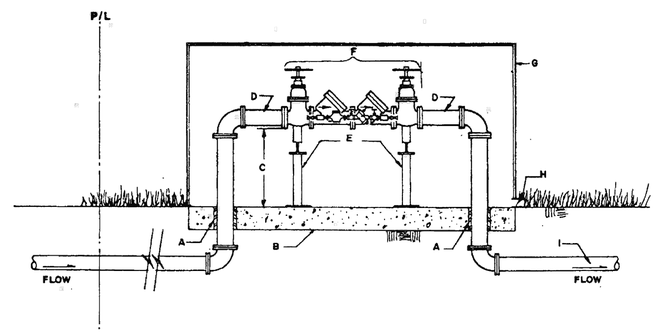

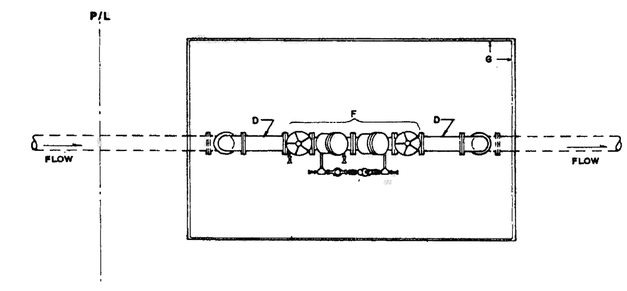

PLAN

GENERAL NOTES:

1. SEE MANUAL OF PROCEDURES FOR THE TYPE OF BACKFLOW PREVENTION ASSEMBLY REQUIRED ON PRIVATE FIRE PROTECTION SYSTEMS.
2. HORIZONTAL DCDA INSTALLATION REQUIRED.
3. PROTECT FROM FREEZING WITH A POSITIVE HEAT SOURCE AND INSULATION.
4. MINIMUM DCDA SIZE MUST BE THE BUILDING SERVICE LINE SIZE.
5. METALLIC RISER PIPING REQUIRED.
6. ABOVE GRADE DCDA INSTALLATION REQUIRED.
7. FLANGED FITTINGS REQUIRED. JOINTS TO BE ADEQUATELY RESTRAINED.
8. WATER LINE PRESSURE AND TEMPERATURE MUST NOT EXCEED THE CAPACITY OF DCDA.
9. INSTALL WATER HAMMER ARRESTORS & THERMO EXPANSION PROTECTION, AS NECESSARY.
10. DEVIATIONS FROM THESE SPECIFICATIONS MUST HAVE PRIOR WRITTEN APPROVAL FROM THE WATER AUTHORITY CROSS CONNECTION OFFICE.
11. THE INSTALLATION OF A BACKFLOW ASSEMBLY MAY CREATE A CLOSED LOOP SYSTEM. THE CUSTOMER IS RESPONSIBLE FOR COMPLIANCE WITH CURRENT PLUMBING CODES WHICH MAY REQUIRE INSTALLATION OF (PRIVATE) PRESSURE RELIEF DEVICES AND/OR EXPANSION TANKS.

CONSTRUCTION NOTES:

A. ADEQUATE SLEEVE & INSULATION. INSULATION SHALL BE (AT MINIMUM) 1" THICK.
B. MINIMUM 4" CONCRETE (3000 PSI) SLAB.
C. 36" MAXIMUM, 12" MINIMUM (FROM LOWEST POINT OF ASSEMBLY TO TOP OF CONCRETE SLAB).
D. PIPE SPOOL (OPTIONAL).
E. PROVIDE ADJUSTABLE METALLIC SUPPORTS..
F. USC APPROVED DCDA, AS SHOWN.
G. PROTECTIVE ENCLOSURE, SEE STANDARD DRAWING 2389 FOR DESIGN CRITERIA.
H. DRAIN: DRAIN TO DAYLIGHT. SCREEN RECOMMENDED TO PREVENT RODENT OR INSECT ENTRY.
I. BUILDING SERVICE LINE.

REVISIONS	WATER AUTHORITY
	WATER DOUBLE CHECK-DETECTOR CHECK ASSEMBLY (DCDA) DWG. 2387 JANUARY 2011

SHEET NOTES:

REVISIONS:

NO.	DATE	INITIALS	NOTES
1	10/30/2024	ARA	CITY SUBMITTAL #1
2	08/26/2025	ARA	CITY SUBMITTAL #2
3			
4			
5			
6			
7			
8			

PROFESSIONAL SEAL:

RYAN J. ANDERSON
NEW MEXICO
28792
PROFESSIONAL ENGINEER

08/26/2025

ISG

THIS DOCUMENT IS THE PROPERTY OF I & S GROUP, INC. AND MAY NOT BE USED, COPIED OR DUPLICATED WITHOUT PRIOR WRITTEN CONSENT.

SHEET NOT VALID UNLESS THIS TEXT IS COLOR.

PROJECT

U-HAUL

PR-2023-008710

ALBUQUERQUE NEW MEXICO

SITE ADDRESS:

U-Haul Moving & Storage
8200 JEFFERSON ST

SHEET CONTENTS:

SITE DETAILS

824071

DRAWN:	GBV	C0-21
CHECKED:	ARA	
DATE:	--/--/--	

C0-DETAILS

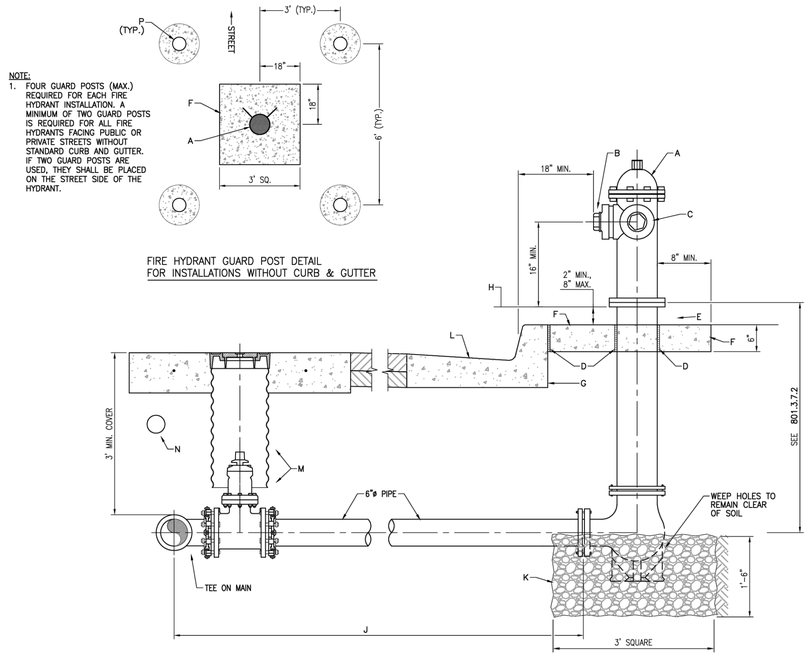

NOTE:
1. FOUR GUARD POSTS (MAX.) REQUIRED FOR EACH FIRE HYDRANT INSTALLATION. A MINIMUM OF TWO GUARD POSTS IS REQUIRED FOR ALL FIRE HYDRANTS FACING PUBLIC OR PRIVATE STREETS WITHOUT STANDARD CURB AND GUTTER. IF TWO GUARD POSTS ARE USED, THEY SHALL BE PLACED ON THE STREET SIDE OF THE HYDRANT.

FIRE HYDRANT GUARD POST DETAIL
FOR INSTALLATIONS WITHOUT CURB & GUTTER

SECTION

GENERAL NOTES

1. NO OBSTRUCTIONS WILL BE PERMITTED WITHIN 3'-0" OF FIRE HYDRANT.
2. HYDRANT LEG SHALL BE VALVED.
3. CONTRACTOR SHALL BE RESPONSIBLE FOR SETTING THE TOP FLANGE OF THE FIRE HYDRANT TO THE CONTROLLED ELEVATION LINE.
4. FOR FIRE HYDRANT LOCATIONS, SEE STANDARD DRAWING 2347.
5. WHEN NEW OR EXISTING SIDEWALK ABUTS CURB, RECONSTRUCT SIDEWALK PER STANDARD DRAWINGS 2430 AND 2431.
6. PUMPER NOZZLE TO BE SET FACING THE TRAVELED WAY, UNLESS OTHERWISE NOTED ON PLANS.
7. HYDRANTS INSTALLED IN SIDEWALK AREAS SHALL MAINTAIN A FIVE FOOT CLEAR PEDESTRIAN PATH PER ADA STANDARD.
8. BEFORE THE WORK WILL BE ACCEPTED, FIRE HYDRANT GPS COORDINATES SHALL BE PROVIDED ON THE RECORD DRAWINGS. GPS COORDINATES OBTAINED BY A PROFESSIONAL SURVEYOR LICENSED IN THE STATE OF NEW MEXICO SHALL BE TAKEN AT THE FLANGE. USE THE NAD 1983 NM STATE PLANE CENTRAL ZONE FOR X AND Y COORDINATES AND NAVD 1988 FOR Z COORDINATE.
9. HYDRANTS INSTALLED WITHOUT STANDARD CURB AND GUTTER SHALL BE PROTECTED WITH STATIONARY POSTS/BOLLARDS. SEE DETAIL ON THIS SHEET.

CONSTRUCTION NOTES

A. FIRE HYDRANT PER SPECIFICATIONS
B. PUMPER NOZZLE 4 1/2"
C. HOSE NOZZLE 2 1/2"
D. 1/2" EXPANSION JOINT MATERIAL
E. MATCH SIDEWALK SLOPE, OR SLOPE 1/4" PER FOOT.
F. 3'x3'x6" SQUARE CONCRETE PAD, TO BE CONSTRUCTED AROUND FIRE HYDRANT'S CENTER LINE WHEN NOT LOCATED WITHIN SIDEWALK OR CONCRETE AREA. CONCRETE PER SEC. 101 EXTERIOR CONCRETE, f'c=3000 psi @ 28 DAYS.
G. BACK OF CURB
H. CONTROLLED ELEVATION LINE, LEVEL IN ALL DIRECTIONS.
J. USE OF RESTRAINED JOINTS IS MANDATORY. ALL FIRE HYDRANT LEG PIPING AND FITTINGS INCLUDING TEE ON MAIN SHALL BE RESTRAINED JOINT.
K. 3'x3'x18" GRAVEL DRAIN POCKET WITH CLEAN GRAVEL, ASTM C33, NO. 57. LINE DRAIN POCKET WITH GEOTEXTILE FABRIC NMDOT CLASS 3.
L. STANDARD CURB AND GUTTER. IF NO CURB AND GUTTER IS PRESENT, BOLLAROS ARE REQUIRED. FOR OTHER TYPES OF CURB AND GUTTER, SPECIAL DESIGN IS REQUIRED.
M. INSTALL FIRE HYDRANT ISOLATION GATE VALVE AT TEE ON MAIN. INSTALL VALVE BOX PER STANDARD DRAWING 2326.
N. ELECTRONIC MARKER DEVICE (EMD), SEE STANDARD SPECIFICATION SECTION 170.
P. STATIONARY GUARD POST PER STANDARD DRAWING 2322

REVISIONS	WATER AUTHORITY
DEC. 2014 MAY 2013	WATER FIRE HYDRANT INSTALLATION DWG. 2340 APR. 2019

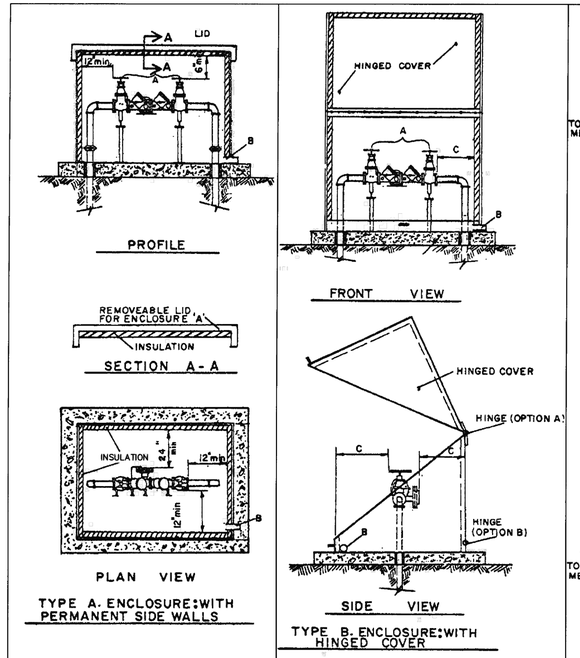

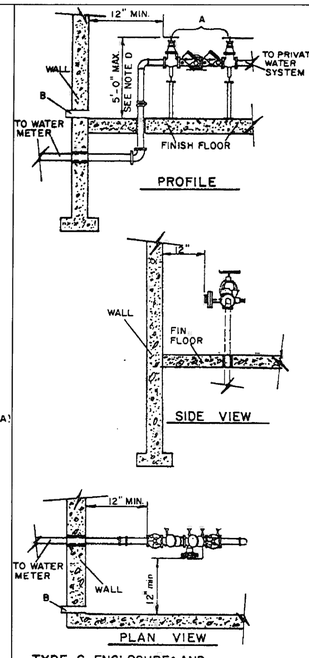

GENERAL NOTES:
1. ENCLOSURE DESIGN: CONSTRUCTION AND MAINTENANCE IS THE RESPONSIBILITY OF THE CONSUMER. THE DESIGN ENCLOSURES MUST MEET THESE MINIMUM SPECIFICATIONS. CONSUMER MAY SELECT THE USE OF TYPE A., B. OR C. ENCLOSURE.
2. INSTALLATION MUST BE PROTECTED FROM FREEZING.
3. ENCLOSURES MUST BE INSTALLED AND MAINTAINED SO THAT UNITS ARE SAFELY & READILY ACCESSIBLE FOR TESTING, MAINTENANCE & REPAIRS.
4. FOR TYPE B. ENCLOSURE, THE HINGE MAY BE LOCATED AT OPTION A. OR B. AS SHOWN.
5. ALTERNATE DESIGNS MAY BE USED WITH PRIOR WRITTEN APPROVAL FROM THE WATER AUTHORITY CROSS CONNECTION OFFICE.
6. IF FLOOR DRAIN IS USED, FLOOR SLAB SHALL BE SLOPED TOWARD DRAIN HOLE.

CONSTRUCTION NOTES:
A. USC APPROVED RPBA, DCVA, DCDA OR PVB.
B. DRAIN: DRAIN OF ADEQUATE SIZE TO ALLOW FOR PROPER DRAINAGE. SHIELD IS RECOMMENDED FOR SIDE DISCHARGING RELIEF VALVES. FOR TYPE C. ENCLOSURE, SWING CHECK IS RECOMMENDED WHEN DRAINING TO DAYLIGHT.
C. ADEQUATE CLEARANCES REQUIRED FOR TESTING, MAINTENANCE & REPAIR.
D. 5' MAXIMUM FROM HANDWHEEL TO FINISH FLOOR, AS SHOWN. UNITS INSTALLED HIGHER THAN 5', CONSUMER MUST PROVIDE PERMANENT ACCESS PLATFORM/LADDER.

REVISIONS	WATER AUTHORITY
	WATER ENCLOSURES DWG. 2389 JANUARY 2011

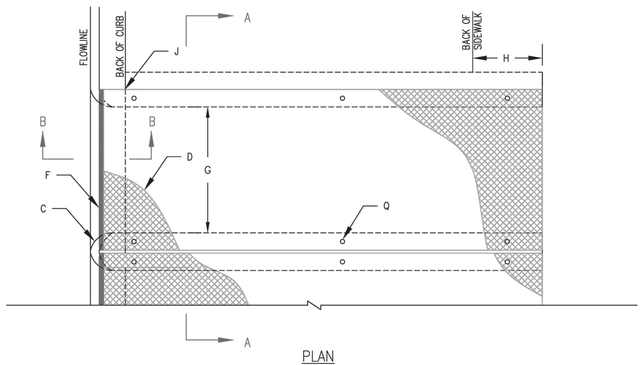

PLAN
SINGLE OR MULTIPLE CULVERT

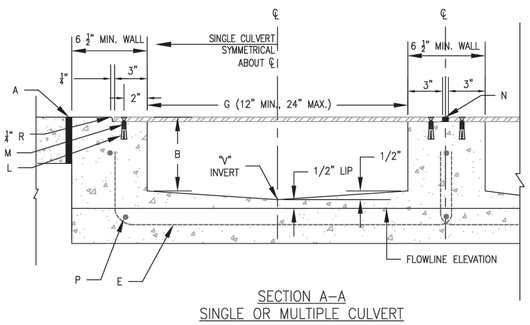

SECTION A–A
SINGLE OR MULTIPLE CULVERT

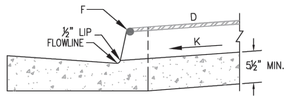

SECTION B–B
SINGLE OR MULTIPLE CULVERT

GENERAL NOTES

1. PLACING OF DRAIN THRU EXISTING SIDEWALK AND CURB & GUTTER REQUIRES THAT THE ENTIRE SIDEWALK AND CURB AND GUTTER STONES BE REMOVED AND REPLACED AS DETAILED HEREIN.
2. THE CULVERT SHALL BE POURED MONOLITHICALLY WITH NEW GUTTER.
3. THE INVERT SHALL BE TROWELED TO PRODUCE A HARD POLISHED SURFACE OF MAXIMUM DENSITY AND SMOOTHNESS. INVERT SHALL BE V-SHAPED TO WITHIN 3" OF OUTLET, THEN WARPED PARALLEL TO FLOWLINE AT THE OUTLET, UNLESS OTHERWISE SHOWN.
4. LENGTH OF EACH PLATE SHALL BE SUCH THAT THE WEIGHT WILL NOT EXCEED 300 LBS. CLEAN SURFACE OF PLATE AND PAINT WITH ONE SHOP COAT RED OXIDE AND TWO FINISH COATS ALUMINUM PAINT (AASHTO M 69).
5. THE CITY WILL NOT ASSUME RESPONSIBILITY FOR MAINTENANCE OF ANY SIDEWALK CULVERT INSTALLED BY OR FOR PRIVATE PROPERTY OWNERS.
6. CULVERT MUST BE PERPENDICULAR TO THE CURB.

CONSTRUCTION NOTES

A. INSTALL 1/2" EXPANSION JOINT.
B. 7" DEPTH WHEN USED IN CONJUNCTION WITH 8" CURB; 5" DEPTH WHEN USED WITH 6" CURB.
C. 3" RADIUS (TYPICAL).
D. 3/8" CHECKERED STEEL PLATE (PAINT PER NOTE 4, ABOVE).
E. NO. 3 REBAR ⟷, SPACE AT 18" O.C. MAXIMUM, 1 1/2" MINIMUM FROM FACE OF CONCRETE. STAGGER FOR MULTIPLE CULVERTS.
F. WELD 3/4" STEEL ROD TO PLATE, FULL LENGTH OF PLATE; GRIND ENDS FLUSH TO THE FACE OF CURB.
G. DRAIN WIDTH PER PLAN (12" MINIMUM, 24" MAXIMUM).
H. EXTEND CULVERT AND STEEL PLATE 1-FOOT BEYOND BACK OF SIDEWALK, UNLESS RESTRICTED BY PROPERTY LINE.
J. IF SIDEWALK IS NOT AT BACK OF CURB, EXTEND CULVERT AND STEEL PLATE TO FACE OF CURB.
K. SLOPE 1/4" PER FOOT (MINIMUM).
L. FOR SECURING PLATE USE POWERS® 3/8-16 CARBON STEEL FLANGED DROPIN ANCHOR OR APPROVED EQUAL. INSTALL USING SETTING TOOL AND MANUFACTURER'S INSTRUCTIONS AT MAX 24" O.C. A MINIMUM OF 2 PER SIDE AND WITHIN 6" OF EACH END.
M. 3/8-16X1" COUNTERSUNK, STAINLESS STEEL, MACHINE SCREW. COVER HEAD WITH 2-PART EPOXY.
N. FILL VOID BETWEEN PLATES WITH NP-1 SEALANT OR CITY APPROVED EQUIVALENT.
P. NO. 3 REBAR, CONTINUOUS.
Q. HOLE DIAMETER AT BOTTOM OF COUNTERSUNK HOLE OF STEEL PLATE TO BE 1/2" DIAMETER.

REVISIONS	CITY OF ALBUQUERQUE
	DRAINAGE SIDEWALK CULVERT PLAN, AND SECTIONS A–A AND B–B DWG. 2236 JUNE 2019

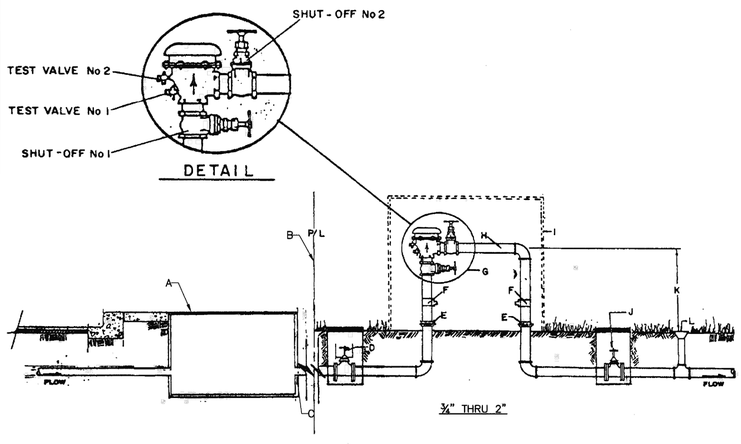

GENERAL NOTES:
1. PVB'S UNAPPROVED FOR CONTAINMENT PROTECTION, EXCEPT FOR LAWN IRRIGATION SYSTEMS.
2. DO NOT INSTALL IN FLOOD PRONE AREAS OR IN STORM RETENTION OR DETENTION BASINS.
3. DO NOT INSTALL PVB'S > 5' ABOVE GROUND LEVEL.
4. PROTECT PVB'S FROM FREEZING WITH A POSITIVE HEAT SOURCE.
5. HORIZONTAL INSTALLATION REQUIRED AS SHOWN.
6. JOINTS TO BE ADEQUATELY RESTRAINED.
7. METALLIC RISER PIPING REQUIRED.
8. THE INSTALLATION OF A BACKFLOW ASSEMBLY MAY CREATE A CLOSED LOOP SYSTEM. THE CUSTOMER IS RESPONSIBLE FOR COMPLIANCE WITH CURRENT PLUMBING CODES WHICH MAY REQUIRE INSTALLATION OF (PRIVATE) PRESSURE RELIEF DEVICES AND/OR EXPANSION TANKS.

CONSTRUCTION NOTES:
A. METER BOX PER STANDARD DRAWING 2362 OR 2363.
B. PROPERTY LINE.
C. SERVICE LINE WITHOUT TAPS OR TEES BETWEEN THE METER AND THE BACKFLOW PREVENTION ASSEMBLY.
D. ISOLATION VALVE (GATE VALVE OR BALL VALVE).
E. UNIONS, MINIMUM 4" ABOVE GRADE.
F. TEE WITH DRAIN PLUG OR BALL DRAIN VALVE, MINIMUM 6" ABOVE GRADE.
G. USC APPROVED PVB, AS SHOWN.
H. SPOOL, 12" MAXIMUM LENGTH.
I. ENCLOSURE, OPTIONAL. SEE WATER STANDARD DRAWING 2389 FOR DESIGN CRITERIA IF ENCLOSURE IS USED.
J. CONTROL VALVE (ELECTRIC OR MANUAL), OPTIONAL.
K. 12" MINIMUM ABOVE ALL DOWNSTREAM PIPING & OUTLETS.
L. SPRINKLER.

REVISIONS	WATER AUTHORITY
	LANDSCAPE PRESSURE VACUUM BREAKER (PVB) DWG. 2388 JANUARY 2011

SHEET NOTES:

REVISIONS:

NO.	DATE	INITIALS	NOTES
1	10/30/2024	ARA	CITY SUBMITTAL #1
2	08/26/2025	ARA	CITY SUBMITTAL #2
3			
4			
5			
6			
7			
8			

PROFESSIONAL SEAL:

RYAN J. ANDERSON
NEW MEXICO
28792
PROFESSIONAL ENGINEER

08/26/2025

ISG

THIS DOCUMENT IS THE PROPERTY OF I & S GROUP, INC. AND MAY NOT BE USED, COPIED OR DUPLICATED WITHOUT PRIOR WRITTEN CONSENT.

SHEET NOT VALID UNLESS THIS TEXT IS COLOR.

PROJECT

U-HAUL

PR-2023-008710

ALBUQUERQUE NEW MEXICO

SITE ADDRESS:
U-Haul Moving & Storage
8200 JEFFERSON ST

SHEET CONTENTS:

SITE DETAILS

824071

DRAWN:	GBV	CO-22
CHECKED:	ARA	
DATE:	--/--/--	

CO-DETAILS

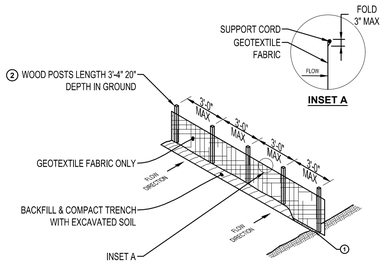

TYPICAL SILT FENCE

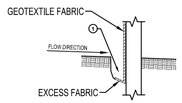

TRENCH

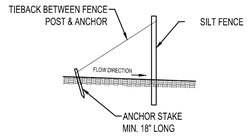

TIE BACK
(WHEN ADDITIONAL SUPPORT IS NEEDED)

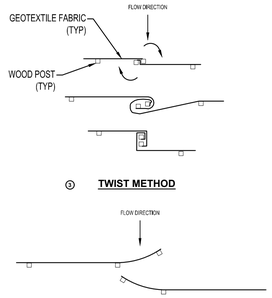

NOTES:

ATTACH FABRIC TO THE POSTS WITH WIRE STAPLES OR WOODEN LATH & NAILS.

ADDITIONAL POST DEPTH OR TIE BACKS MAY BE REQUIRED IN UNSTABLE SOILS.

8'-0" POST SPACING ALLOWED IF A WOVEN GEOTEXTILE FABRIC IS USED.

① TRENCH SHALL BE A MINIMUM OF 4" WIDE & 6" DEEP TO BURY & ANCHOR THE GEOTEXTILE FABRIC. FOLD MATERIAL TO FIT TRENCH, BACKFILL, & COMPACT TRENCH WITH EXCAVATED SOIL.

② WOOD POST SHALL BE A MINIMUM SIZE OF 1 7/8" x 1 7/8" OF OAK OR HICKORY.

③ CONSTRUCT SILT FENCE FROM A CONTINUOUS ROLL IF POSSIBLE BY CUTTING LENGTHS TO AVOID JOINTS. IF A JOINT IS NECESSARY USE ONE OF THE FOLLOWING TWO METHODS.

A. TWIST METHOD - OVERLAP THE END POSTS & TWIST, OR ROTATE AT LEAST 180°.

B. HOOK METHOD - HOOK END OF EACH SILT FENCE LENGTH.

SILT FENCE
NTS

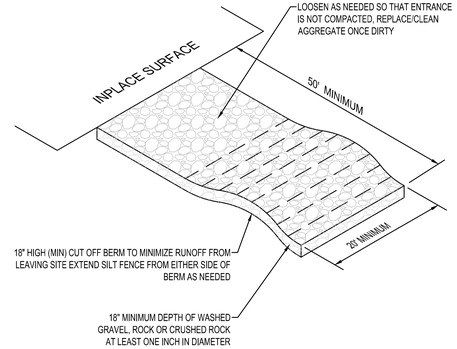

ROCK TRACKING PAD
NTS

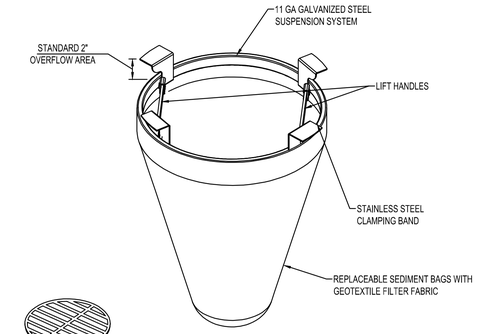

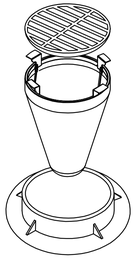

NOTES:

FOR SPECIFICATIONS AND MAINTENANCE GUIDELINES VISIT WWW.INLETFILTERS.COM

INSTALLATION:

REMOVE GRATE

DROP FLEXSTORM INLET FILTER ONTO LOAD BEARING LIP OF CASTING OR CONCRETE STRUCTURE

REPLACE GRATE

MATERIALS:

FRAMING - 11 GAUGE STEEL; CORROSION RESISTANT

SEDIMENT BAG - WOVEN GEOTEXTILE FABRIC; 2 CUBIC FOOT TYP VOLUME; STAINLESS STEEL LOCKING BAND SECURING BAG TO FRAME

ROUND FILTER INLET PROTECTION
NTS

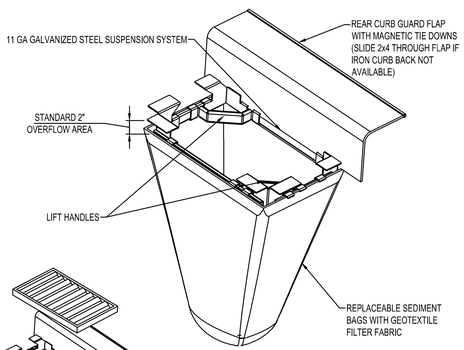

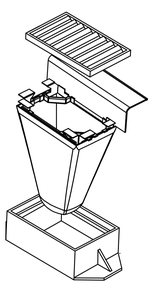

NOTES:

FOR SPECIFICATIONS AND MAINTENANCE GUIDELINES VISIT WWW.INLETFILTERS.COM

INSTALLATION:

REMOVE GRATE

DROP FLEXSTORM INLET FILTER ONTO LOAD BEARING LIP OF CASTING OR CONCRETE STRUCTURE

REPLACE GRATE

MATERIALS:

FRAMING - 11 GAUGE STEEL; CORROSION RESISTANT

SEDIMENT BAG - WOVEN GEOTEXTILE FABRIC; 2 CUBIC FOOT TYP VOLUME; STAINLESS STEEL LOCKING BAND SECURING BAG TO FRAME

CURB BOX FILTER INLET PROTECTION
NTS

N

0 40 80

SCALE IN FEET

SHEET NOTES:

REVISIONS:

NO.	DATE	INITIALS	NOTES
1	10/30/2024	ARA	CITY SUBMITTAL #1
2	08/26/2025	ARA	CITY SUBMITTAL #2
3			
4			
5			
6			
7			
8			

PROFESSIONAL SEAL:

RYAN J. ANDERSON
NEW MEXICO
28792
PROFESSIONAL ENGINEER

08/26/2025

ISG

THIS DOCUMENT IS THE PROPERTY OF I & S GROUP, INC. AND MAY NOT BE USED, COPIED OR DUPLICATED WITHOUT PRIOR WRITTEN CONSENT.

SHEET NOT VALID UNLESS THIS TEXT IS COLOR.

PROJECT

U-HAUL

PR-2023-008710

ALBUQUERQUE NEW MEXICO

SITE ADDRESS:

U-Haul Moving & Storage
8200 JEFFERSON ST

SHEET CONTENTS:

SWPPP DETAILS

824071

DRAWN:	GBV	C1-20
CHECKED:	ARA	
DATE:	--/--/--	

C1-SWPPP

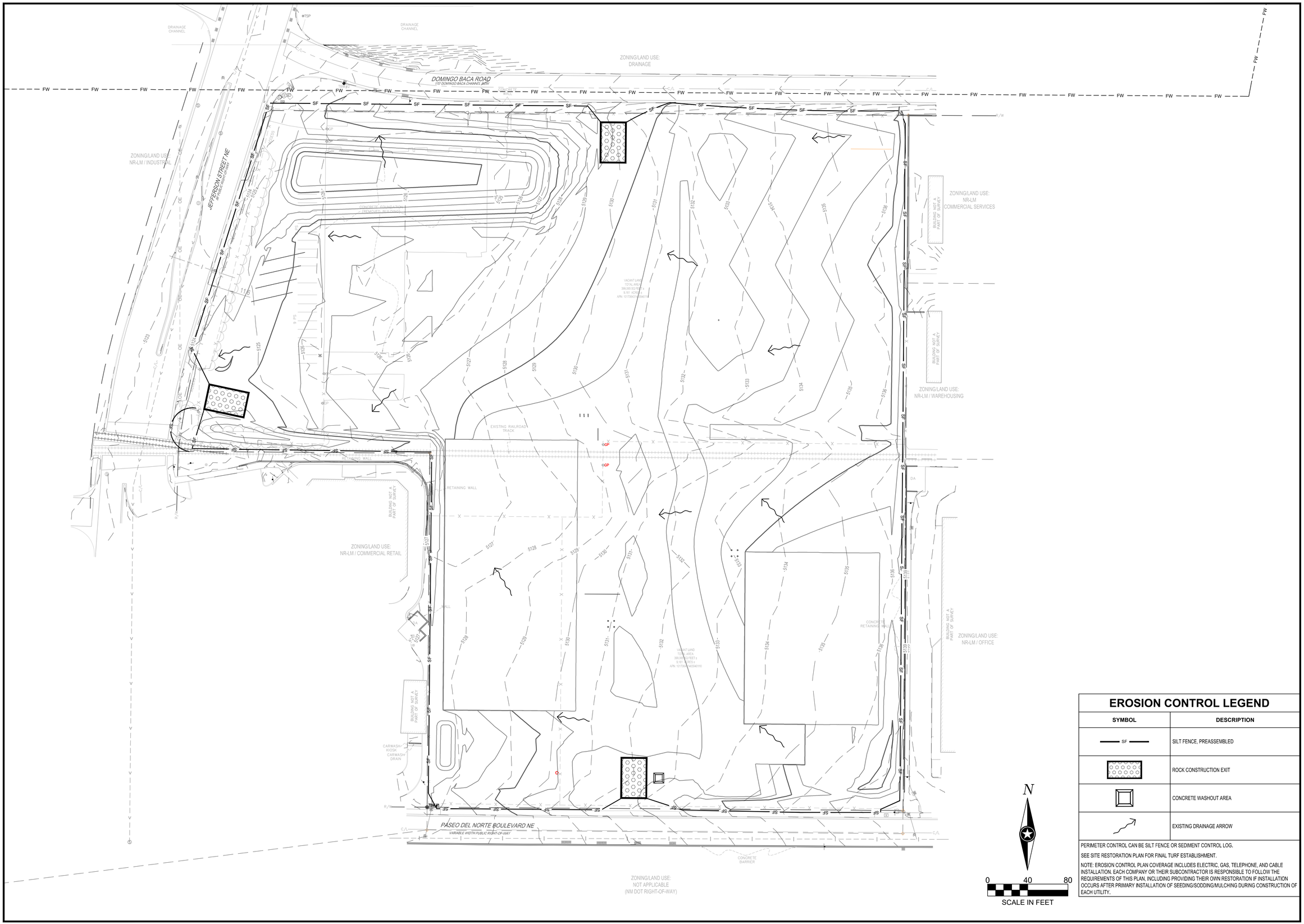

EROSION CONTROL LEGEND

SYMBOL	DESCRIPTION
SF	SILT FENCE, PREASSEMBLED
	ROCK CONSTRUCTION EXIT
	CONCRETE WASHOUT AREA
	EXISTING DRAINAGE ARROW

PERIMETER CONTROL CAN BE SILT FENCE OR SEDIMENT CONTROL LOG.

SEE SITE RESTORATION PLAN FOR FINAL TURF ESTABLISHMENT.

NOTE: EROSION CONTROL PLAN COVERAGE INCLUDES ELECTRIC, GAS, TELEPHONE, AND CABLE INSTALLATION. EACH COMPANY OR THEIR SUBCONTRACTOR IS RESPONSIBLE TO FOLLOW THE REQUIREMENTS OF THIS PLAN, INCLUDING PROVIDING THEIR OWN RESTORATION IF INSTALLATION OCCURS AFTER PRIMARY INSTALLATION OF SEEDING/SODDING/MULCHING DURING CONSTRUCTION OF EACH UTILITY.

SHEET NOTES:

REVISIONS:

NO.	DATE	INITIALS	NOTES
1	10/30/2024	ARA	CITY SUBMITTAL #1
2	08/26/2025	ARA	CITY SUBMITTAL #3
3			
4			
5			
6			
7			
8			

PROFESSIONAL SEAL:

RYAN J. ANDERSON
NEW MEXICO
28792
PROFESSIONAL ENGINEER

08/26/2025

ISG

THIS DOCUMENT IS THE PROPERTY OF I & S GROUP, INC. AND MAY NOT BE USED, COPIED OR DUPLICATED WITHOUT PRIOR WRITTEN CONSENT.

SHEET NOT VALID UNLESS THIS TEXT IS COLOR.

PROJECT

U-HAUL

PR-2023-008710

ALBUQUERQUE NEW MEXICO

SITE ADDRESS:

U-Haul Moving & Storage
8200 JEFFERSON ST

SHEET CONTENTS:

PRE-CONSTRUCTION SWPPP

824071

DRAWN:	GBV	C1-30
CHECKED:	ARA	
DATE:	--/--/--	

C1-SWPPP

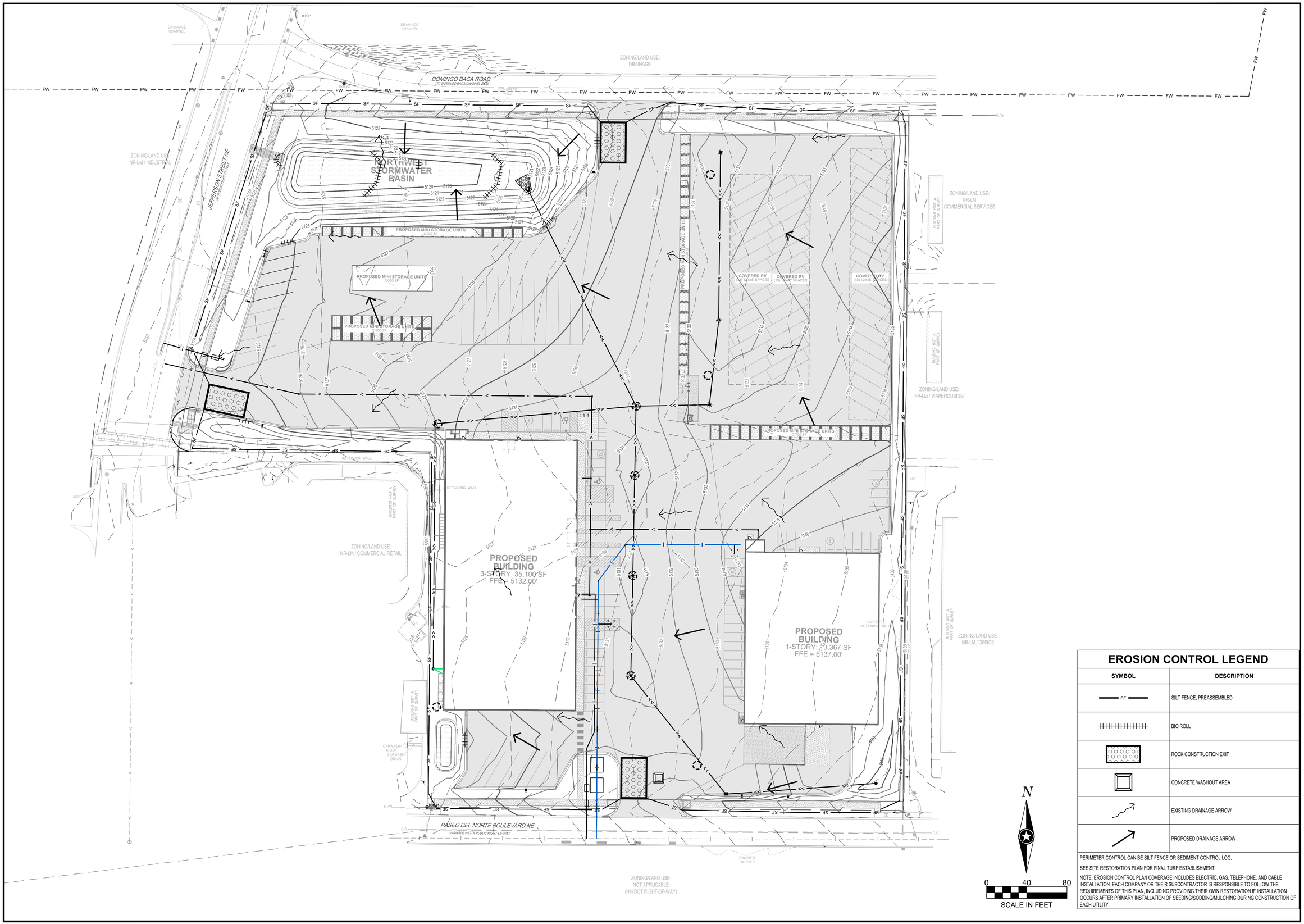

EROSION CONTROL LEGEND

SYMBOL	DESCRIPTION
SF	SILT FENCE, PREASSEMBLED
	BIO ROLL
	ROCK CONSTRUCTION EXIT
	CONCRETE WASHOUT AREA
	EXISTING DRAINAGE ARROW
	PROPOSED DRAINAGE ARROW

PERIMETER CONTROL CAN BE SILT FENCE OR SEDIMENT CONTROL LOG.

SEE SITE RESTORATION PLAN FOR FINAL TURF ESTABLISHMENT.

NOTE: EROSION CONTROL PLAN COVERAGE INCLUDES ELECTRIC, GAS, TELEPHONE, AND CABLE INSTALLATION. EACH COMPANY OR THEIR SUBCONTRACTOR IS RESPONSIBLE TO FOLLOW THE REQUIREMENTS OF THIS PLAN, INCLUDING PROVIDING THEIR OWN RESTORATION IF INSTALLATION OCCURS AFTER PRIMARY INSTALLATION OF SEEDING/SODDING/MULCHING DURING CONSTRUCTION OF EACH UTILITY.

SHEET NOTES:

REVISIONS:

NO.	DATE	INITIALS	NOTES
1	10/30/2024	ARA	CITY SUBMITTAL #1
2	08/26/2025	ARA	CITY SUBMITTAL #2
3			
4			
5			
6			
7			
8			

PROFESSIONAL SEAL:

RYAN J. ANDERSON
NEW MEXICO
28792
PROFESSIONAL ENGINEER

08/26/2025

ISG

THIS DOCUMENT IS THE PROPERTY OF I & S GROUP, INC. AND MAY NOT BE USED, COPIED OR DUPLICATED WITHOUT PRIOR WRITTEN CONSENT.

SHEET NOT VALID UNLESS THIS TEXT IS COLOR.

PROJECT

U-HAUL

PR-2023-008710

ALBUQUERQUE NEW MEXICO

SITE ADDRESS:

U-Haul Moving & Storage
8200 JEFFERSON ST

SHEET CONTENTS:

PROPOSED SWPPP

824071

DRAWN:	GBV	C1-40
CHECKED:	ARA	
DATE:	--/--/--	

C1-SWPPP

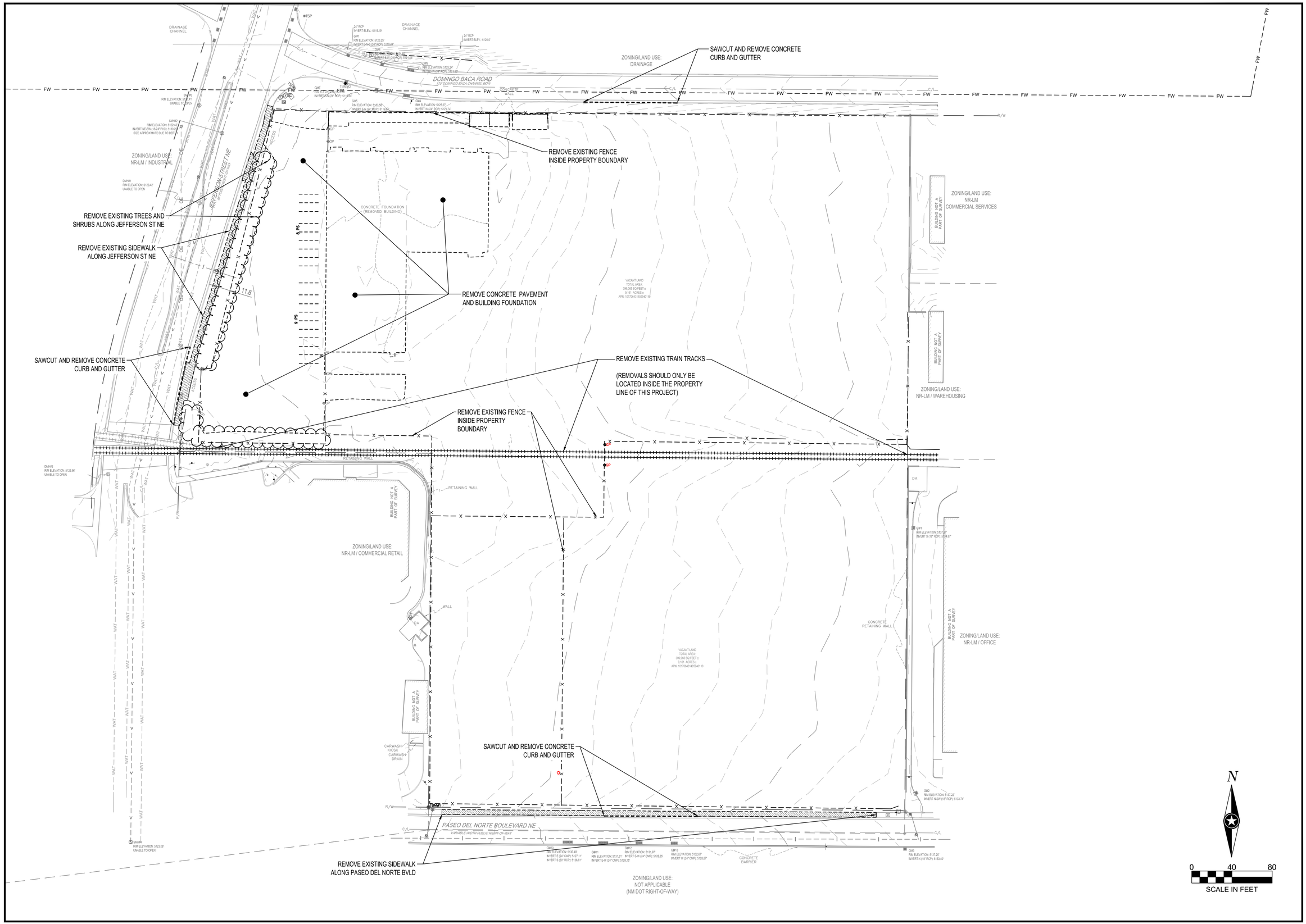

SHEET NOTES:

REVISIONS:

NO.	DATE	INITIALS	NOTES
1	10/30/2024	ARA	CITY SUBMITTAL #1
2	08/26/2025	ARA	CITY SUBMITTAL #2
3			
4			
5			
6			
7			
8			

PROFESSIONAL SEAL:

RYAN J. ANDERSON
NEW MEXICO
28792
PROFESSIONAL ENGINEER

08/26/2025

ISG

THIS DOCUMENT IS THE PROPERTY OF I & S GROUP, INC. AND MAY NOT BE USED, COPIED OR DUPLICATED WITHOUT PRIOR WRITTEN CONSENT.

SHEET NOT VALID UNLESS THIS TEXT IS COLOR.

PROJECT

U-HAUL

PR-2023-008710

ALBUQUERQUE NEW MEXICO

SITE ADDRESS:

U-Haul Moving & Storage
8200 JEFFERSON ST

SHEET CONTENTS:

EXISTING SITE AND REMOVAL PLAN

824071

DRAWN:	GBV	C2-10
CHECKED:	ARA	
DATE:	--/--/--	

C2-EXISTING

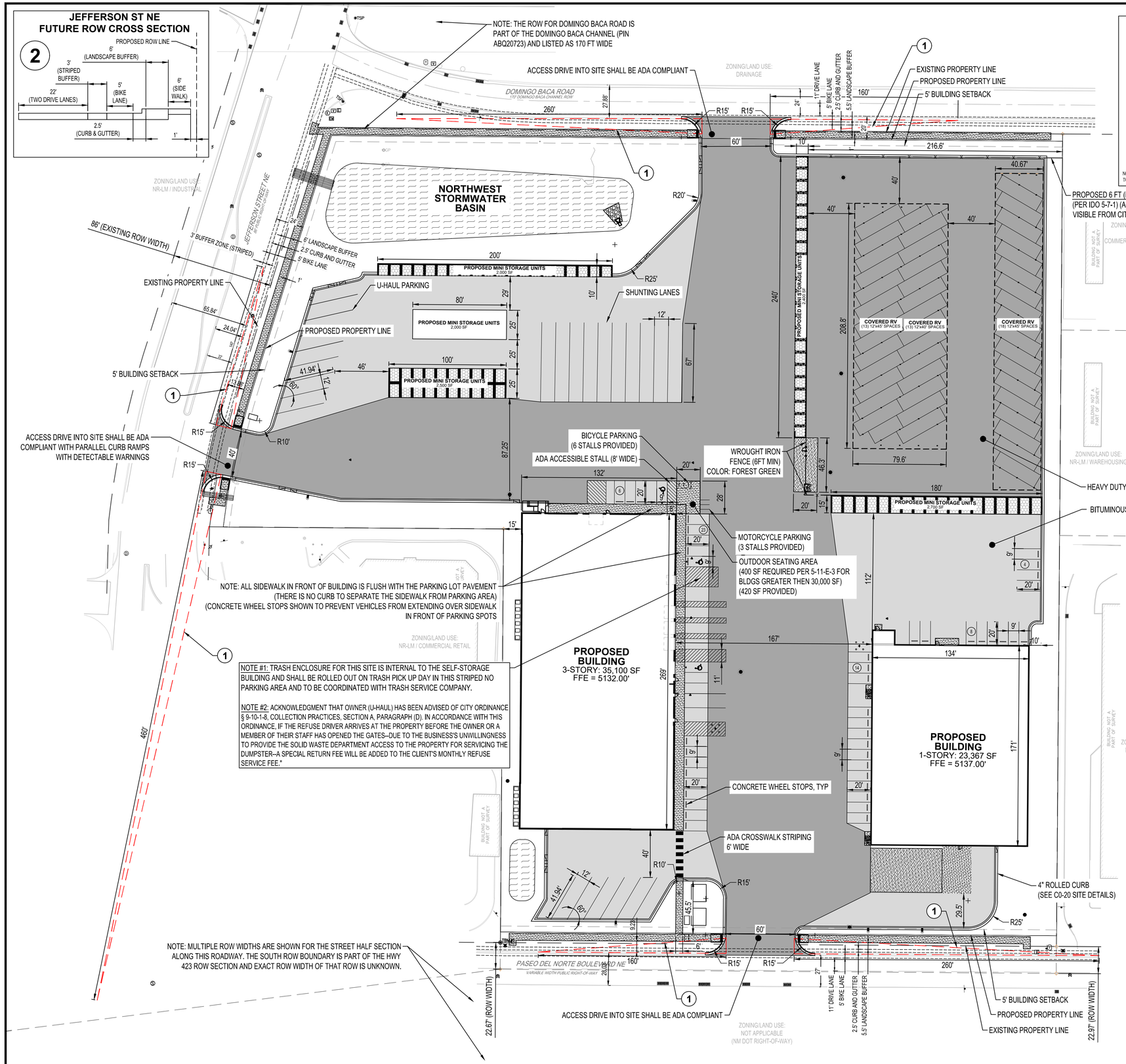

DOMINGO BACA ROAD FUTURE ROW CROSS SECTION

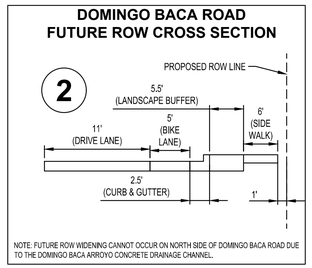

NOTE: FUTURE ROW WIDENING CANNOT OCCUR ON NORTH SIDE OF DOMINGO BACA ROAD DUE TO THE DOMINGO BACA ARROYO CONCRETE DRAINAGE CHANNEL.

PAVEMENT LEGEND

SYMBOL	DESCRIPTION
	BITUMINOUS PAVEMENT (4.5" ACC OVER 6" AGGREGATE BASE)
	HEAVY DUTY BITUMINOUS PAVEMENT (5" ACC OVER 6" AGGREGATE BASE)
	HEAVY DUTY CONCRETE PAVEMENT

SITE SUMMARY

ZONING:	NR-LM
HEAVY VEHICLE AND EQUIPMENT RENTAL AREA:	4,603 SF
SELF-STORAGE BUILDING SELF-STORAGE AREA:	117,826 SF
U-BOX BUILDING SELF-STORAGE AREA:	23,367 SF
MINI-STORAGE BUILDING SELF-STORAGE AREA:	9,425 SF

PARKING REQUIREMENTS (PER ALBUQUERQUE IDO)

TYPE	UNIT / AREA	STALLS REQUIRED	STALLS PROVIDED
HEAVY VEHICLE AND EQUIPMENT RENTAL:	1 / 1,000 SF GFA	5 SPACES (4,603 / 1000 = 4.6)	5
SELF-STORAGE AREA:	1 / 3,000 SF GFA	50 SPACES (150,618 / 3,000 = 50.2)	50
ADA (ACCESSIBLE):		3 SPACES FOR 51-75 SPACES	3
BICYCLE:	3 SPACES OR 10% OF REQ. OFF-STREET PARKING SPACES, WHICHEVER IS GREATER (55 * 10% = 5.5)		3
MOTORCYCLE:	3 SPACES FOR 51-100 REQ. OFF-STREET PARKING SPACES		6
	TOTAL:	55	55

SETBACKS

	BUILDING
FRONT YARD	15'-0"
SIDE YARD	5'-0"
REAR YARD	15'-0"

KEY NOTES

1. LANDSCAPING AND SIGNAGE WILL NOT INTERFERE WITH CLEAR SIGHT REQUIREMENTS. SIGNS, WALLS, TREES, AND SHRUBBERY BETWEEN 3 AND 8 FEET TALL (AS MEASURED FROM THE GUTTER PAN) WILL NOT BE ACCEPTABLE IN THE CLEAR SIGHT TRIANGLE
2. FUTURE ROW WIDENING SHOWN ON SITE PLAN FOR FUTURE PLANNING PURPOSES FOR ROW WIDENING ONLY AND CONSTRUCTION OF BIKE LANES AND NEW CURB AND GUTTER ALONG THE ADJACENT ROADWAYS ARE NOT PART OF THE CONSTRUCTION OF THIS PROJECT.

PASEO DEL NORTE BVLD NE FUTURE ROW CROSS SECTION

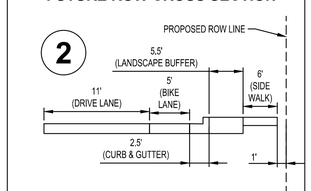

NOTE: FUTURE ROW WIDENING CANNOT OCCUR ON SOUTH SIDE OF PASEO DEL NORTE BVLD NE DUE TO THE EXISTING HWY 423 INFRASTRUCTURE ABUTTING THIS FRONTAGE ROAD.

N

0 40 80

SCALE IN FEET

SHEET NOTES:

REVISIONS:

NO.	DATE	INITIALS	NOTES
1	10/30/2024	ARA	CITY SUBMITTAL #1
2	08/26/2025	ARA	CITY SUBMITTAL #2
3			
4			
5			
6			
7			
8			

PROFESSIONAL SEAL:

RYAN J. ANDERSON
NEW MEXICO
28792
PROFESSIONAL ENGINEER

08/26/2025

ISG

THIS DOCUMENT IS THE PROPERTY OF I & S GROUP, INC. AND MAY NOT BE USED, COPIED OR DUPLICATED WITHOUT PRIOR WRITTEN CONSENT.

SHEET NOT VALID UNLESS THIS TEXT IS COLOR.

PROJECT

U-HAUL

PR-2023-008710

ALBUQUERQUE NEW MEXICO

SITE ADDRESS:

U-Haul Moving & Storage
8200 JEFFERSON ST

SHEET CONTENTS:

SITE PLAN

824071

DRAWN:	GBV	C3-10
CHECKED:	ARA	
DATE:	--/--/--	

SITE

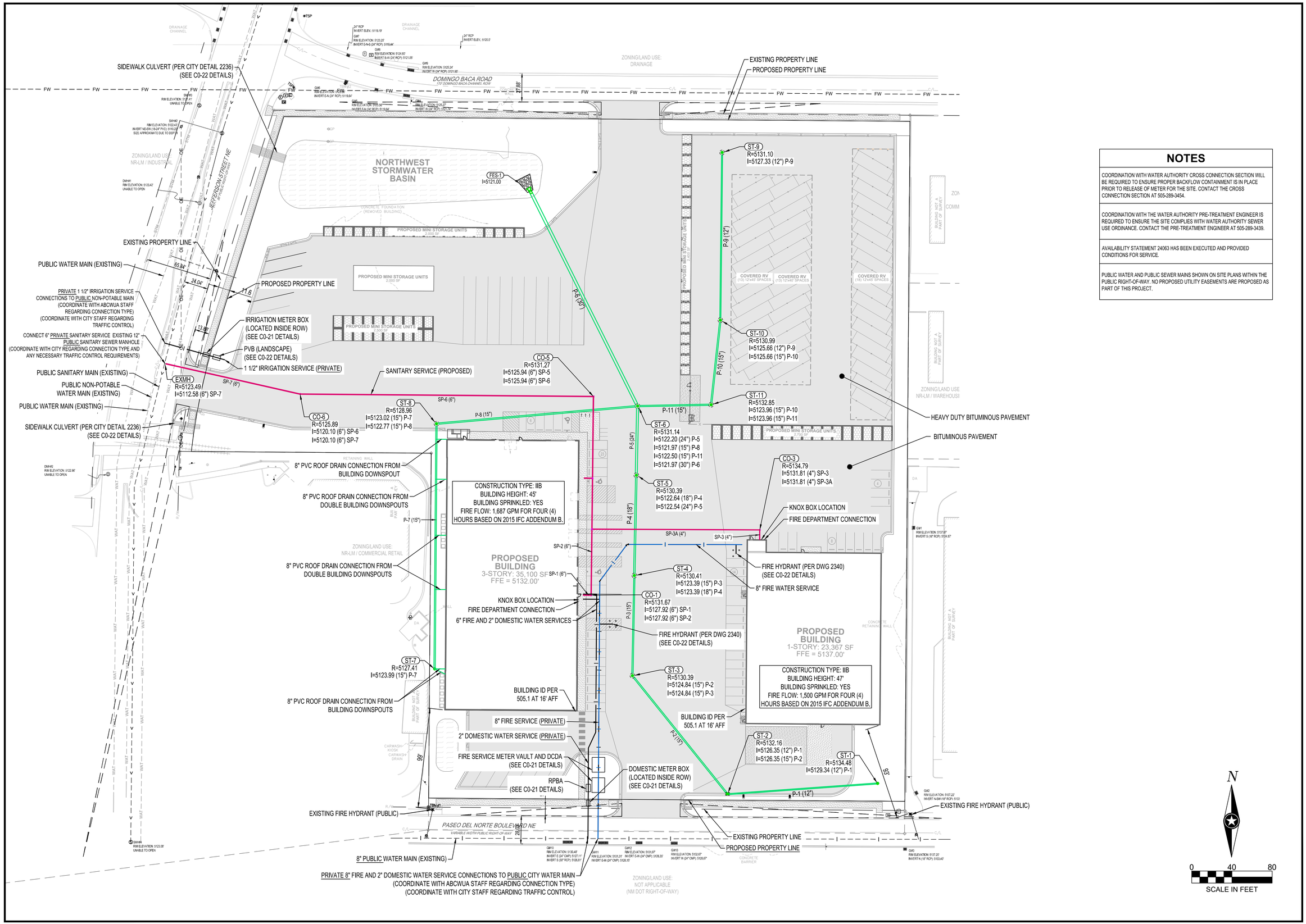

NOTES

COORDINATION WITH WATER AUTHORITY CROSS CONNECTION SECTION WILL BE REQUIRED TO ENSURE PROPER BACKFLOW CONTAINMENT IS IN PLACE PRIOR TO RELEASE OF METER FOR THE SITE. CONTACT THE CROSS CONNECTION SECTION AT 505-289-3454.

COORDINATION WITH THE WATER AUTHORITY PRE-TREATMENT ENGINEER IS REQUIRED TO ENSURE THE SITE COMPLIES WITH WATER AUTHORITY SEWER USE ORDINANCE. CONTACT THE PRE-TREATMENT ENGINEER AT 505-289-3439.

AVAILABILITY STATEMENT 24063 HAS BEEN EXECUTED AND PROVIDED CONDITIONS FOR SERVICE.

PUBLIC WATER AND PUBLIC SEWER MAINS SHOWN ON SITE PLANS WITHIN THE PUBLIC RIGHT-OF-WAY. NO PROPOSED UTILITY EASEMENTS ARE PROPOSED AS PART OF THIS PROJECT.

SHEET NOTES:

REVISIONS:

NO.	DATE	INITIALS	NOTES
1	10/30/2024	ARA	CITY SUBMITTAL #1
2	06/26/2025	ARA	CITY SUBMITTAL #2
3			
4			
5			
6			
7			
8			

PROFESSIONAL SEAL:

RYAN J. ANDERSON
NEW MEXICO
28792
PROFESSIONAL ENGINEER

08/26/2025

ISG

THIS DOCUMENT IS THE PROPERTY OF I & S GROUP, INC. AND MAY NOT BE USED, COPIED OR DUPLICATED WITHOUT PRIOR WRITTEN CONSENT.

SHEET NOT VALID UNLESS THIS TEXT IS COLOR.

PROJECT

U-HAUL

PR-2023-008710

ALBUQUERQUE NEW MEXICO

SITE ADDRESS:

U-Haul Moving & Storage
8200 JEFFERSON ST

SHEET CONTENTS:

UTILITY PLAN

824071

DRAWN:	GBV	**C3-20**
CHECKED:	ARA	
DATE:	--/--/--	

UTILITY

STORM DRAIN PIPE SCHEDULE

PIPE NO.	DRAIN FROM	INLET ELEVATION	DRAIN TO	OUTLET ELEVATION	PIPE SIZE (IN)	MATERIAL	PIPE CLASS	PIPE GRADE	PIPE LENGTH (FT)
P-1	ST-1	5129.34	ST-2	5126.35	12	HDPE	HDPE	2.00%	150
P-2	ST-2	5126.35	ST-3	5124.84	15	HDPE	HDPE	1.00%	151
P-3	ST-3	5124.84	ST-4	5123.39	15	HDPE	HDPE	1.45%	100
P-4	ST-4	5123.39	ST-5	5122.64	18	HDPE	HDPE	0.75%	100
P-5	ST-5	5122.54	ST-6	5122.20	24	HDPE	HDPE	0.50%	69
P-6	ST-6	5121.97	FES-1	5121.00	30	HDPE	HDPE	0.40%	243
P-7	ST-7	5123.99	ST-8	5123.02	15	HDPE	HDPE	0.40%	244
P-8	ST-8	5122.77	ST-6	5121.97	15	HDPE	HDPE	0.40%	201
P-9	ST-9	5127.33	ST-10	5125.66	12	HDPE	HDPE	1.00%	167
P-10	ST-10	5125.66	ST-11	5123.96	15	HDPE	HDPE	2.00%	85
P-11	ST-11	5123.96	ST-6	5122.50	15	HDPE	HDPE	2.00%	73

SANITARY SEWER PIPE SCHEDULE

PIPE NO.	DRAIN FROM	INLET ELEVATION	DRAIN TO	OUTLET ELEVATION	PIPE SIZE	MATERIAL	PIPE CLASS	PIPE GRADE	PIPE LENGTH (FT)
SP-1	SS BLDG 1	5128.00	CO-1	5127.92	6"	PVC	SDR-35	1.00%	8
SP-2	CO-1	5127.92	CO-2	5127.26	6"	PVC	SDR-35	1.00%	66
SP-3	U-BOX	5132.00	CO-3	5131.81	4"	PVC	SCH 40	2.00%	10
SP-3A	CO-3	5131.81	CO-2	5126.53	4"	PVC	SCH 40	3.16%	167
SP-4	CO-2	5127.26	CO-4	5126.76	6"	PVC	SDR-35	1.00%	51
SP-4A	SS BLDG 2	5126.00	CO-4	5125.52	6"	PVC	SDR-35	5.84%	8
SP-5	CO-4	5126.76	CO-5	5125.94	6"	PVC	SDR-35	1.00%	81
SP-6	CO-5	5125.94	CO-6	5120.10	6"	PVC	SDR-35	2.00%	292
SP-7	CO-6	5120.10	EXMH	5112.58	6"	PVC	SDR-35	5.45%	138

STORM DRAIN STRUCTURE SCHEDULE

STRUCTURE NO.	STRUCTURE TYPE	STRUCTURE SIZE (IN)	STRUCTURE MATERIAL	CASTING	PAY HEIGHT (LN FT)	* TOP OF CASTING ELEVATION	OUTLET INVERT	OUTLET PIPE
FES-1	HDPE Flared End Section	15 in HDPE	HDPE	??? ??? ???	500.00	5124.25	???	
ST-1	DRAIN BASIN	18 Ø	PVC	FRAME GRATE COVER	5.14	5134.48	5129.34	P-1
ST-2	CATCH BASIN (TYPE 1)	24 x 36	RC	FRAME GRATE COVER	5.81	5132.16	5126.35	P-2
ST-3	MnDOT TYPE F	48 Ø	RC	FRAME GRATE COVER	5.55	5130.39	5124.84	P-3
ST-4	MnDOT TYPE F	48 Ø	RC	FRAME GRATE COVER	7.02	5130.41	5123.39	P-4
ST-5	MnDOT TYPE F	48 Ø	RC	FRAME GRATE COVER	7.85	5130.39	5122.54	P-5
ST-6	TYPE F	48 Ø	RC	FRAME GRATE COVER	9.17	5131.14	5121.97	P-6
ST-7	DRAIN BASIN	12 Ø	PVC	FRAME GRATE COVER	3.42	5127.41	5123.99	P-7
ST-8	MnDOT TYPE F	48 Ø	RC	FRAME GRATE COVER	6.18	5128.96	5122.77	P-8
ST-9	TYPE F	48 Ø	RC	FRAME GRATE COVER	3.77	5131.10	5127.33	P-9
ST-10	TYPE F	48 Ø	RC	FRAME GRATE COVER	5.33	5130.99	5125.66	P-10
ST-11	TYPE F	48 Ø	RC	FRAME GRATE COVER	8.89	5132.85	5123.96	P-11

SANITARY SEWER STRUCTURE SCHEDULE

STRUCTURE NO.	STRUCTURE TYPE	STRUCTURE SIZE (IN)	STRUCTURE MATERIAL	CASTING	TOP OF CASTING ELEVATION	INVERT ELEVATION	OUTLET PIPE
CO-1	CLEANOUT	6 Ø	PVC	SOLID COVER	5131.67	5127.92	SP-2
CO-2	CLEANOUT	6 Ø	Reinforced Concrete	OVERFLOW GRATE STANDARD STANDARD	5131.74	5126.53	SP-4
CO-3	CLEANOUT	4 Ø	Reinforced Concrete	OVERFLOW GRATE STANDARD STANDARD	5134.79	5131.81	SP-3A
CO-4	CLEANOUT	6 Ø	PVC	SOLID COVER	5131.74	5125.52	SP-5
CO-5	CLEANOUT	6 Ø	PVC	SOLID COVER	5131.27	5125.94	SP-6
CO-6	CLEANOUT	6 Ø	PVC	SOLID COVER	5125.89	5120.10	SP-7

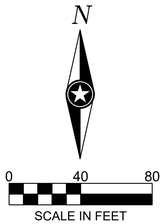

NOTES

COORDINATION WITH WATER AUTHORITY CROSS CONNECTION SECTION WILL BE REQUIRED TO ENSURE PROPER BACKFLOW CONTAINMENT IS IN PLACE PRIOR TO RELEASE OF METER FOR THE SITE. CONTACT THE CROSS CONNECTION SECTION AT 505-289-3454.

COORDINATION WITH THE WATER AUTHORITY PRE-TREATMENT ENGINEER IS REQUIRED TO ENSURE THE SITE COMPLIES WITH WATER AUTHORITY SEWER USE ORDINANCE. CONTACT THE PRE-TREATMENT ENGINEER AT 505-289-3439.

AVAILABILITY STATEMENT 24063 HAS BEEN EXECUTED AND PROVIDED CONDITIONS FOR SERVICE.

PUBLIC WATER AND PUBLIC SEWER MAINS SHOWN ON SITE PLANS WITHIN THE PUBLIC RIGHT-OF-WAY. NO PROPOSED UTILITY EASEMENTS ARE PROPOSED AS PART OF THIS PROJECT.

UTILITY CROSSING

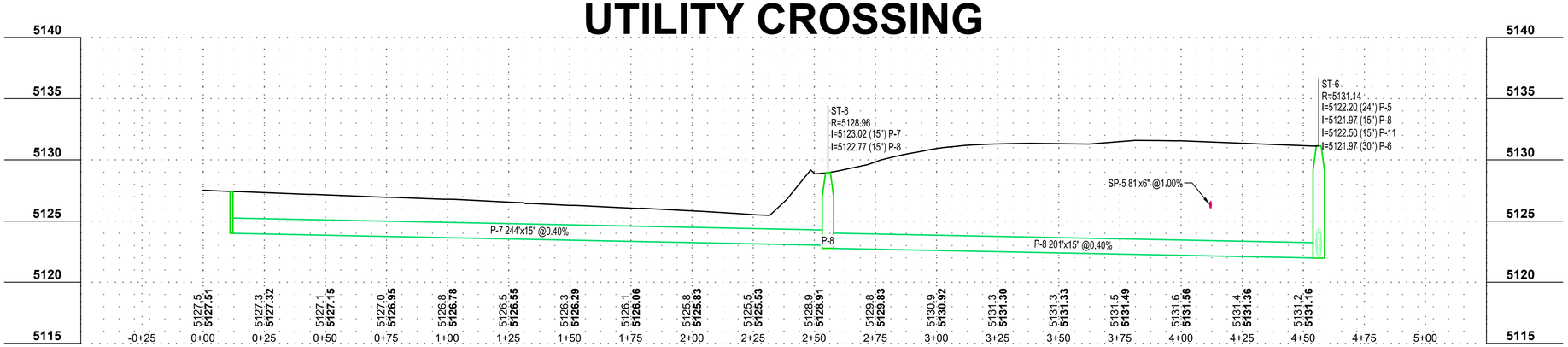

SHEET NOTES:

REVISIONS:

NO.	DATE	INITIALS	NOTES
1	10/30/2024	ARA	CITY SUBMITTAL #1
2	08/26/2025	ARA	CITY SUBMITTAL #2
3			
4			
5			
6			
7			
8			

PROFESSIONAL SEAL:

RYAN J. ANDERSON
NEW MEXICO
28792
PROFESSIONAL ENGINEER

08/26/2025

ISG

THIS DOCUMENT IS THE PROPERTY OF I & S GROUP, INC. AND MAY NOT BE USED, COPIED OR DUPLICATED WITHOUT PRIOR WRITTEN CONSENT.

SHEET NOT VALID UNLESS THIS TEXT IS COLOR.

PROJECT

U-HAUL

PR-2023-008710

ALBUQUERQUE NEW MEXICO

SITE ADDRESS:

U-Haul Moving & Storage
8200 JEFFERSON ST

SHEET CONTENTS:

UTILITY PROFILES AND SCHEDULES

824071

DRAWN:	GBV	C3-21
CHECKED:	ARA	
DATE:	--/--/--	

UTILITY

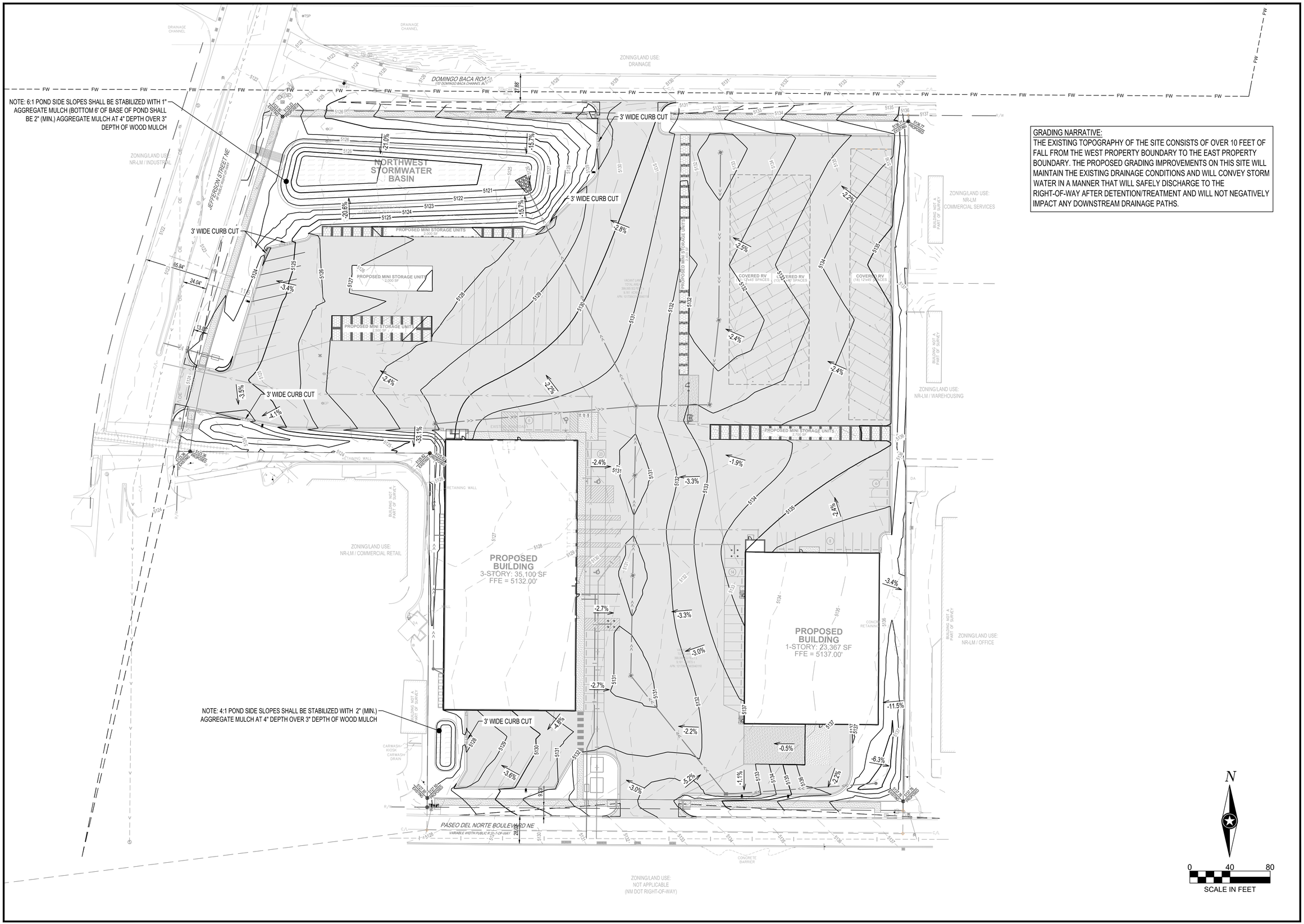

GRADING NARRATIVE:
THE EXISTING TOPOGRAPHY OF THE SITE CONSISTS OF OVER 10 FEET OF FALL FROM THE WEST PROPERTY BOUNDARY TO THE EAST PROPERTY BOUNDARY. THE PROPOSED GRADING IMPROVEMENTS ON THIS SITE WILL MAINTAIN THE EXISTING DRAINAGE CONDITIONS AND WILL CONVEY STORM WATER IN A MANNER THAT WILL SAFELY DISCHARGE TO THE RIGHT-OF-WAY AFTER DETENTION/TREATMENT AND WILL NOT NEGATIVELY IMPACT ANY DOWNSTREAM DRAINAGE PATHS.

SHEET NOTES:

REVISIONS:

NO.	DATE	INITIALS	NOTES
1	10/30/2024	ARA	CITY SUBMITTAL #1
2	08/26/2025	ARA	CITY SUBMITTAL #2
3			
4			
5			
6			
7			
8			

PROFESSIONAL SEAL:

RYAN J. ANDERSON
NEW MEXICO
28792
PROFESSIONAL ENGINEER

08/26/2025

ISG

THIS DOCUMENT IS THE PROPERTY OF I & S GROUP, INC. AND MAY NOT BE USED, COPIED OR DUPLICATED WITHOUT PRIOR WRITTEN CONSENT.

SHEET NOT VALID UNLESS THIS TEXT IS COLOR.

PROJECT

U-HAUL

PR-2023-008710

ALBUQUERQUE NEW MEXICO

SITE ADDRESS:
U-Haul Moving & Storage
8200 JEFFERSON ST

SHEET CONTENTS:

GRADING PLAN

824071

DRAWN:	GBV	**C4-10**
CHECKED:	ARA	
DATE:	--/--/--	

GRADING

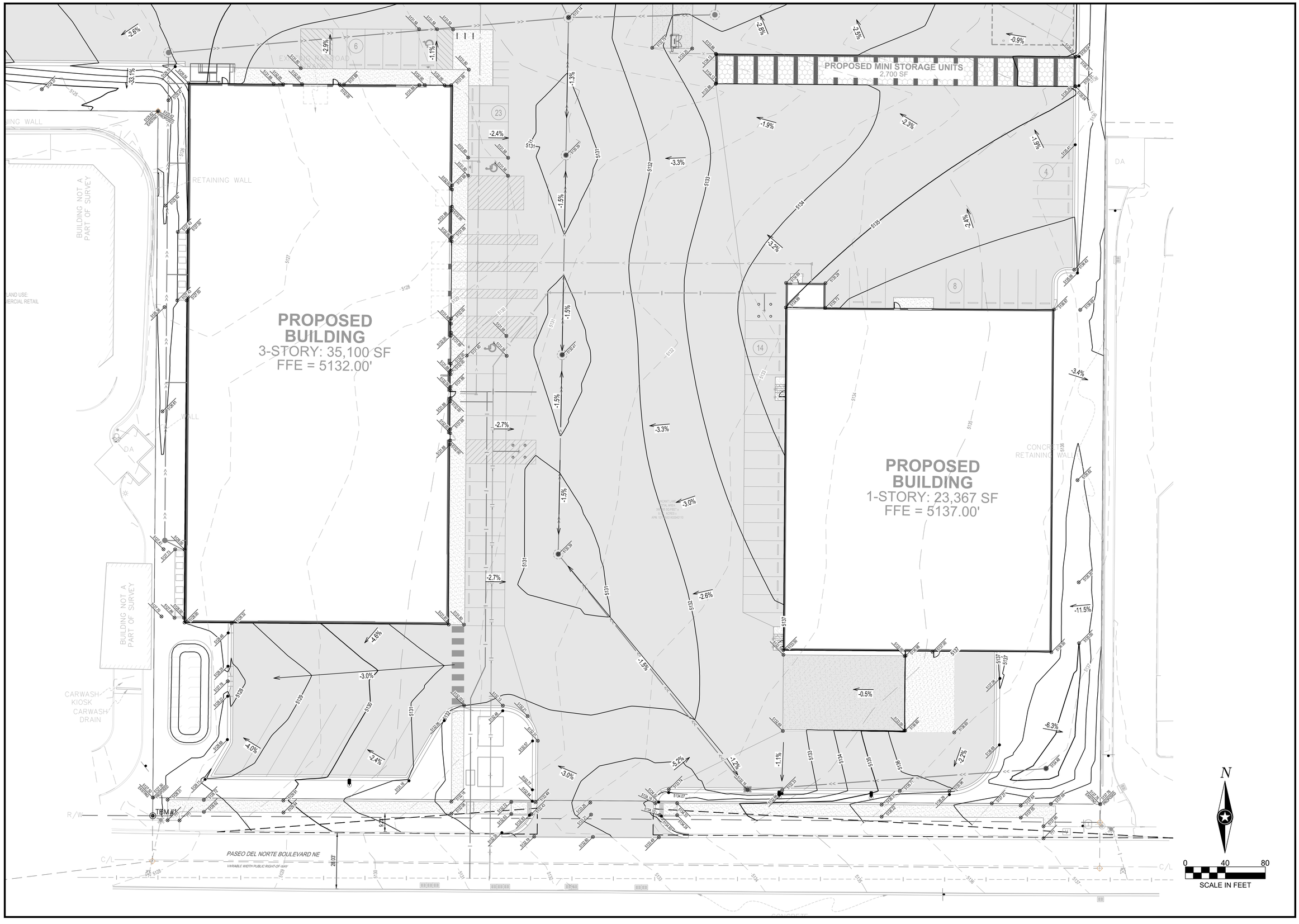

SHEET NOTES:

REVISIONS:

NO.	DATE	INITIALS	NOTES
1	10/30/2024	ARA	CITY SUBMITTAL #1
2	08/26/2025	ARA	CITY SUBMITTAL #2
3			
4			
5			
6			
7			
8			

PROFESSIONAL SEAL:

RYAN J. ANDERSON
NEW MEXICO
28792
PROFESSIONAL ENGINEER

08/26/2025

ISG

THIS DOCUMENT IS THE PROPERTY OF I & S GROUP, INC. AND MAY NOT BE USED, COPIED OR DUPLICATED WITHOUT PRIOR WRITTEN CONSENT.

SHEET NOT VALID UNLESS THIS TEXT IS COLOR.

PROJECT

U-HAUL

PR-2023-008710

ALBUQUERQUE NEW MEXICO

SITE ADDRESS:
U-Haul Moving & Storage
8200 JEFFERSON ST

SHEET CONTENTS:

DETAILED GRADING PLAN

824071

DRAWN:	GBV	C4-11
CHECKED:	ARA	
DATE:	--/--/--	

DETAILED GRADING

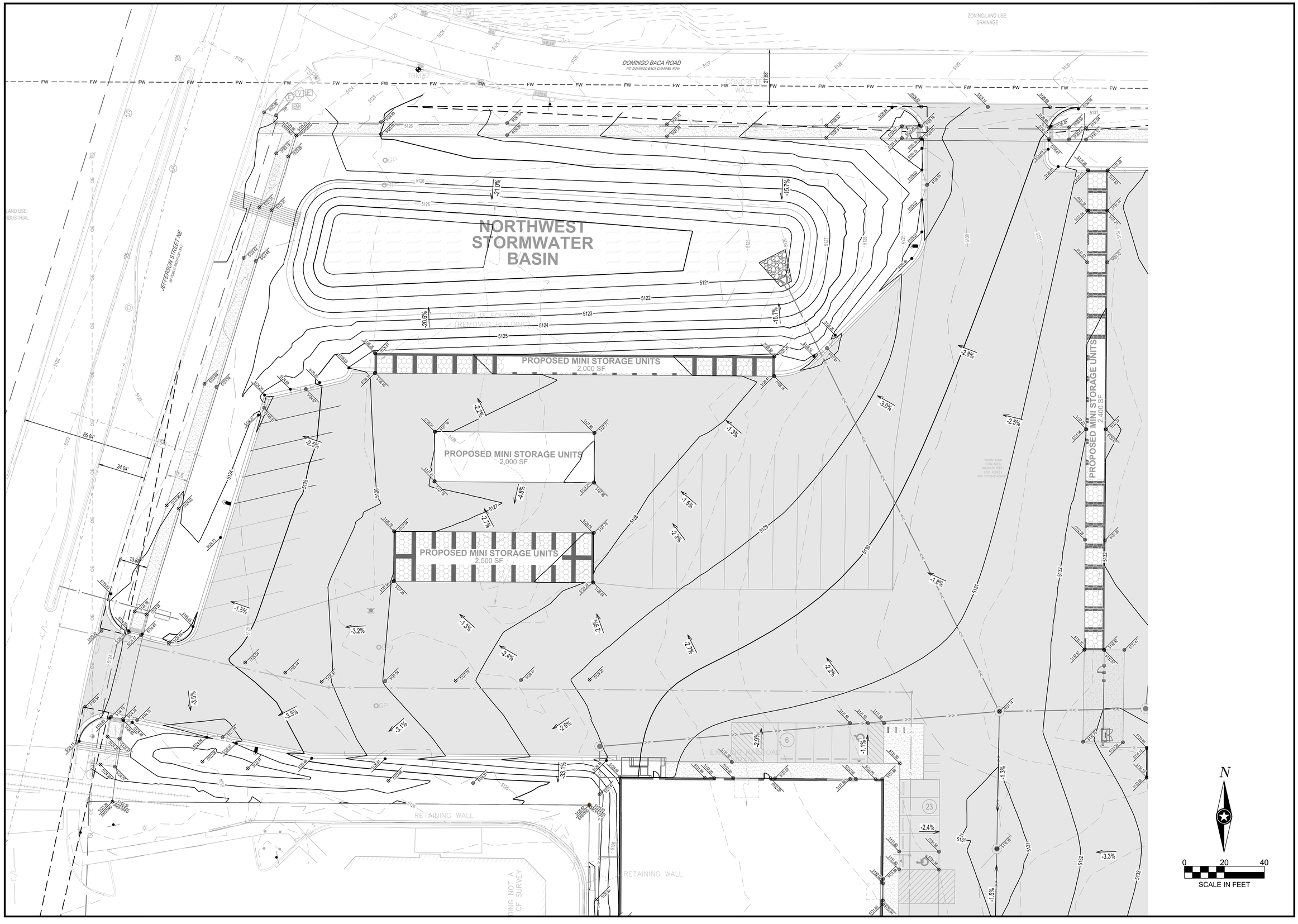

SHEET NOTES:

REVISIONS:

NO.	DATE	INITIALS	NOTES
1	10/30/2024	ARA	CITY SUBMITTAL #1
2	08/26/2025	ARA	CITY SUBMITTAL #2
3			
4			
5			
6			
7			
8			

PROFESSIONAL SEAL:

RYAN J. ANDERSON
NEW MEXICO
28792
PROFESSIONAL ENGINEER

08/26/2025

ISG

THIS DOCUMENT IS THE PROPERTY OF I & S GROUP, INC. AND MAY NOT BE USED, COPIED OR DUPLICATED WITHOUT PRIOR WRITTEN CONSENT.

SHEET NOT VALID UNLESS THIS TEXT IS COLOR.

PROJECT

U-HAUL

PR-2023-008710

ALBUQUERQUE NEW MEXICO

SITE ADDRESS:
U-Haul Moving & Storage
8200 JEFFERSON ST

SHEET CONTENTS:

DETAILED GRADING PLAN

824071

DRAWN:	GBV	C4-12
CHECKED:	ARA	
DATE:	--/--/--	

DETAILED GRADING

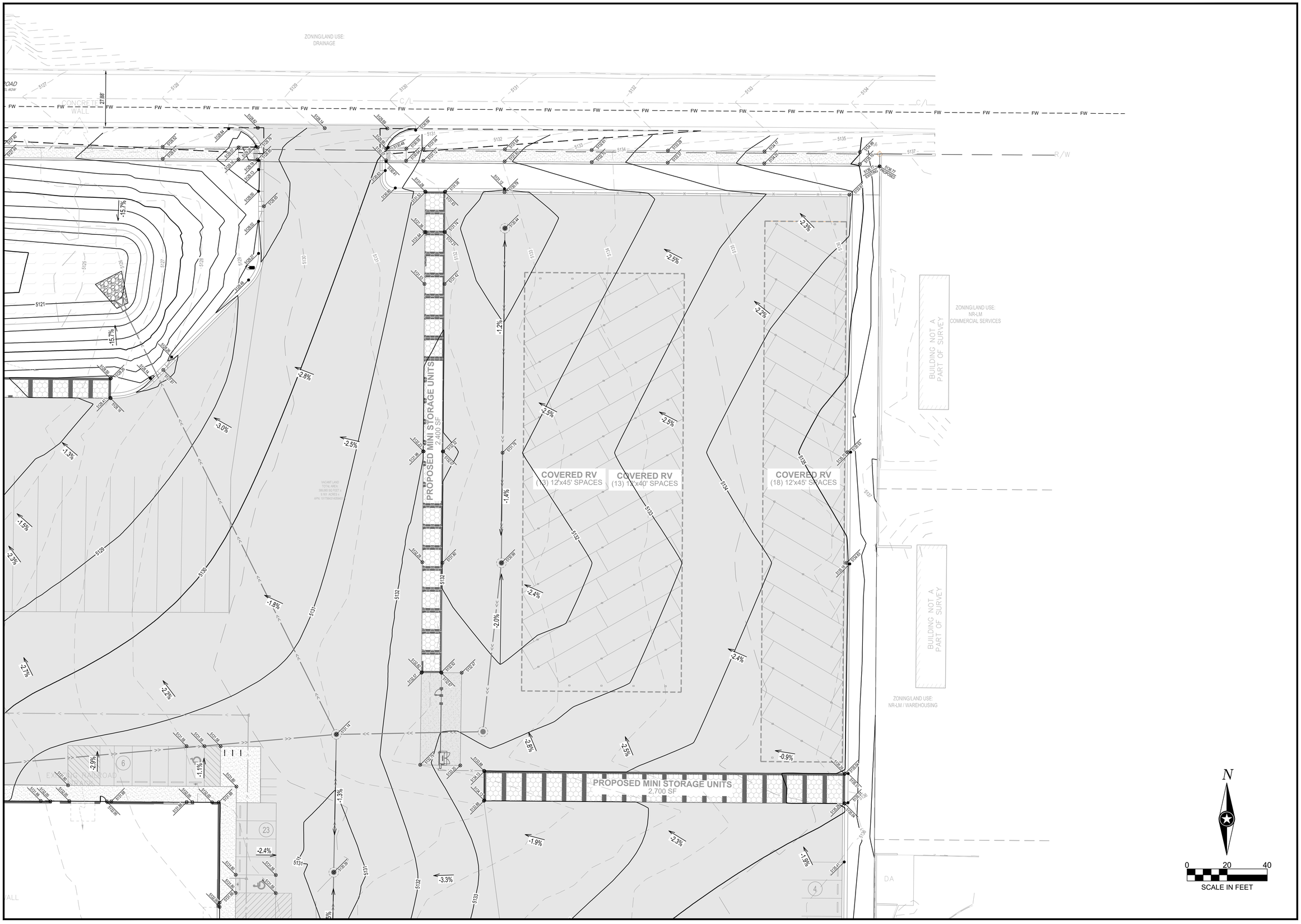

SHEET NOTES:

REVISIONS:

NO.	DATE	INITIALS	NOTES
1	10/30/2024	ARA	CITY SUBMITTAL #1
2	08/26/2025	ARA	CITY SUBMITTAL #3
3			
4			
5			
6			
7			
8			

PROFESSIONAL SEAL:

RYAN J. ANDERSON
NEW MEXICO
28792
PROFESSIONAL ENGINEER

08/26/2025

ISG

THIS DOCUMENT IS THE PROPERTY OF I & S GROUP, INC. AND MAY NOT BE USED, COPIED OR DUPLICATED WITHOUT PRIOR WRITTEN CONSENT.

SHEET NOT VALID UNLESS THIS TEXT IS COLOR

PROJECT

U-HAUL

PR-2023-008710

ALBUQUERQUE NEW MEXICO

SITE ADDRESS:
U-Haul Moving & Storage
8200 JEFFERSON ST

SHEET CONTENTS:

DETAILED GRADING PLAN

824071

DRAWN:	GBV	C4-13
CHECKED:	ARA	
DATE:	--/--/--	

DETAILED GRADING

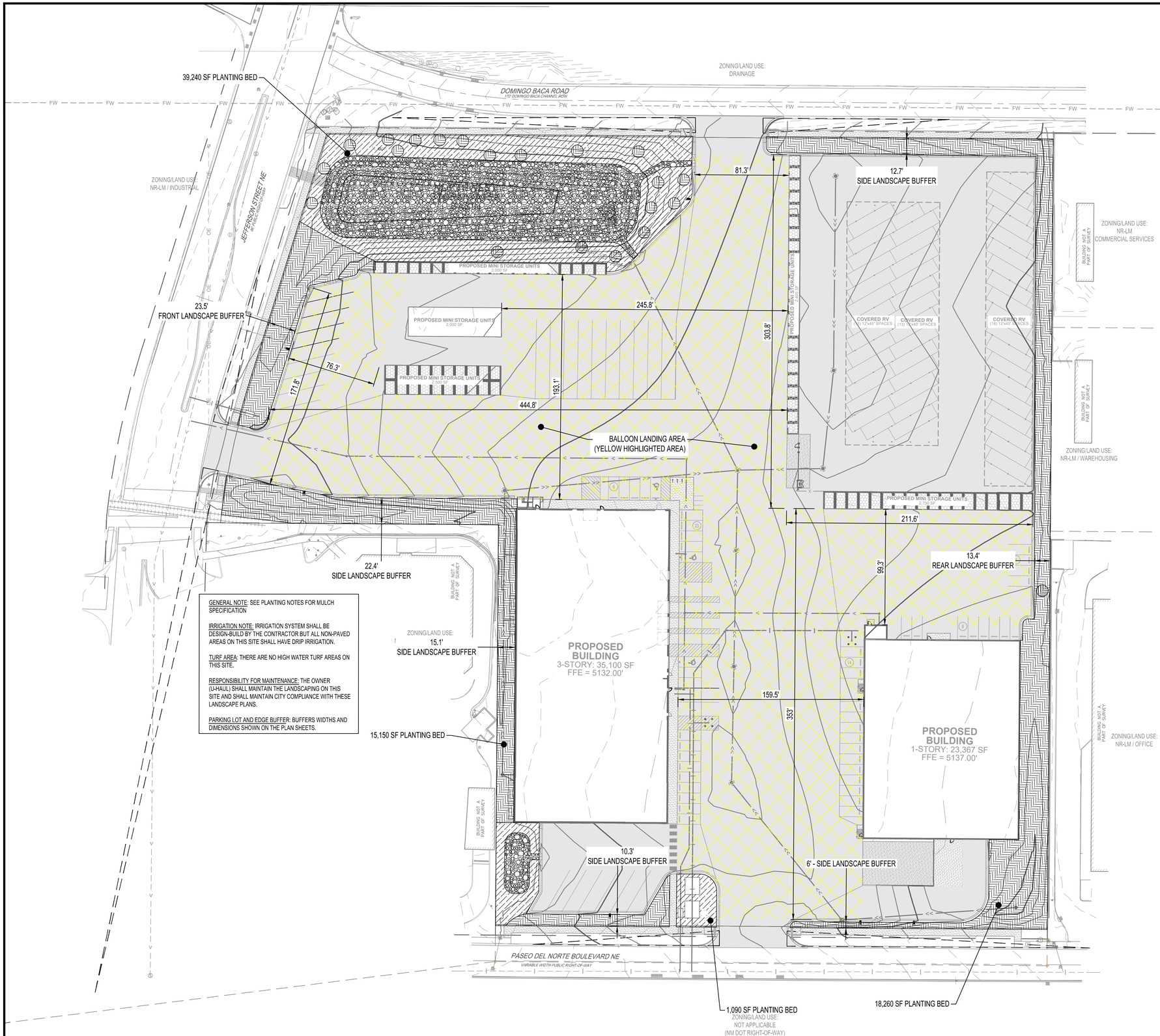

GENERAL NOTE: SEE PLANTING NOTES FOR MULCH SPECIFICATION

IRRIGATION NOTE: IRRIGATION SYSTEM SHALL BE DESIGN-BUILD BY THE CONTRACTOR BUT ALL NON-PAVED AREAS ON THIS SITE SHALL HAVE DRIP IRRIGATION.

TURF AREA: THERE ARE NO HIGH WATER TURF AREAS ON THIS SITE.

RESPONSIBILITY FOR MAINTENANCE: THE OWNER (U-HAUL) SHALL MAINTAIN THE LANDSCAPING ON THIS SITE AND SHALL MAINTAIN CITY COMPLIANCE WITH THESE LANDSCAPE PLANS.

PARKING LOT AND EDGE BUFFER: BUFFERS WIDTHS AND DIMENSIONS SHOWN ON THE PLAN SHEETS.

PLANT SCHEDULE

SYMBOL	QTY	DESCRIPTION
GROUND COVERS		
	19,651 SF	1" MOUNTAINAIR BROWN ROCK MULCH AT 3" DEPTH
	17,136 SF	3/8" GRAY ROUND ROCK MULCH AT 3" DEPTH
	39,121 SF	DOUBLE SHREDDED WOOD MULCH (NATURAL COLOR)

NOTE: SEE PLANTING NOTES FOR MULCH SPECIFICATION

MULCH NOTE: ORGANIC MULCH IS REQUIRED AS GROUND COVER UNDER TREES, NOT INCLUDING STREET TREES, WITHIN A 5-FOOT RADIUS AROUND THE TREE TRUNK, BUT NOT DIRECTLY AGAINST THE TRUNK. IN THESE AREAS, WEED BARRIER FABRIC IS PROHIBITED.

IRRIGATION NOTE: IRRIGATION SYSTEM SHALL BE DESIGN-BUILD BY THE CONTRACTOR BUT ALL NON-PAVED AREAS ON THIS SITE SHALL HAVE DRIP IRRIGATION.

TURF AREA: THERE ARE NO HIGH WATER TURF AREAS ON THIS SITE.

RESPONSIBILITY FOR MAINTENANCE: THE OWNER (U-HAUL) SHALL MAINTAIN THE LANDSCAPING ON THIS SITE AND SHALL MAINTAIN CITY COMPLIANCE WITH THESE LANDSCAPE PLANS.

SHEET NOTES:

REVISIONS:

NO.	DATE	INITIALS	NOTES
1	10/30/2024	ARA	CITY SUBMITTAL #1
2	08/26/2025	ARA	CITY SUBMITTAL #2
3			
4			
5			
6			
7			
8			

PROFESSIONAL SEAL:

STATE OF NEW MEXICO
DANIELLE P. PIERQUET
LA-2024-0016
REGISTERED LANDSCAPE ARCHITECT

08/26/2025

ISG

THIS DOCUMENT IS THE PROPERTY OF I & S GROUP, INC. AND MAY NOT BE USED, COPIED OR DUPLICATED WITHOUT PRIOR WRITTEN CONSENT.

SHEET NOT VALID UNLESS THIS TEXT IS COLOR.

PROJECT

U-HAUL

PR-2023-008710

ALBUQUERQUE NEW MEXICO

SITE ADDRESS:
U-Haul Moving & Storage
8200 JEFFERSON ST

SHEET CONTENTS:
ALTERNATIVE RESTORATION PLAN

824071

DRAWN:	AE	C5-10
CHECKED:	PN	
DATE:	--/--/--	

28816 C5 - LAND

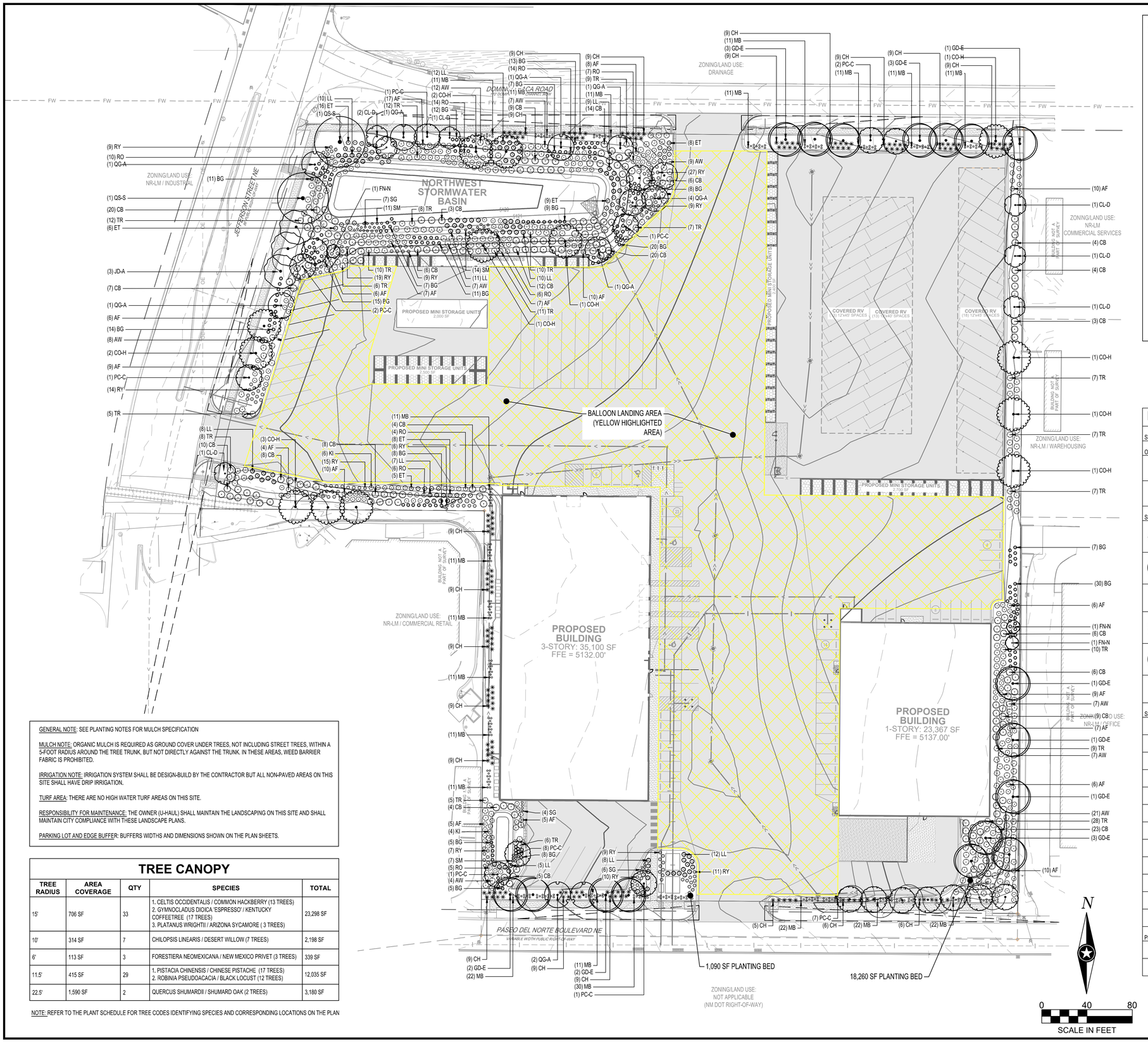

GENERAL NOTE: SEE PLANTING NOTES FOR MULCH SPECIFICATION

MULCH NOTE: ORGANIC MULCH IS REQUIRED AS GROUND COVER UNDER TREES, NOT INCLUDING STREET TREES, WITHIN A 5-FOOT RADIUS AROUND THE TREE TRUNK, BUT NOT DIRECTLY AGAINST THE TRUNK. IN THESE AREAS, WEED BARRIER FABRIC IS PROHIBITED.

IRRIGATION NOTE: IRRIGATION SYSTEM SHALL BE DESIGN-BUILD BY THE CONTRACTOR BUT ALL NON-PAVED AREAS ON THIS SITE SHALL HAVE DRIP IRRIGATION.

TURF AREA: THERE ARE NO HIGH WATER TURF AREAS ON THIS SITE.

RESPONSIBILITY FOR MAINTENANCE: THE OWNER (U-HAUL) SHALL MAINTAIN THE LANDSCAPING ON THIS SITE AND SHALL MAINTAIN CITY COMPLIANCE WITH THESE LANDSCAPE PLANS.

PARKING LOT AND EDGE BUFFER: BUFFERS WIDTHS AND DIMENSIONS SHOWN ON THE PLAN SHEETS.

TREE CANOPY

TREE RADIUS	AREA COVERAGE	QTY	SPECIES	TOTAL
15'	706 SF	33	1. CELTIS OCCIDENTALIS / COMMON HACKBERRY (13 TREES) 2. GYMNOCLADUS DIOICA 'ESPRESSO' / KENTUCKY COFFEETREE (17 TREES) 3. PLATANUS WRIGHTII / ARIZONA SYCAMORE (3 TREES)	23,298 SF
10'	314 SF	7	CHILOPSIS LINEARIS / DESERT WILLOW (7 TREES)	2,198 SF
6'	113 SF	3	FORESTIERA NEOMEXICANA / NEW MEXICO PRIVET (3 TREES)	339 SF
11.5'	415 SF	29	1. PISTACIA CHINENSIS / CHINESE PISTACHE (17 TREES) 2. ROBINIA PSEUDOACACIA / BLACK LOCUST (12 TREES)	12,035 SF
22.5'	1,590 SF	2	QUERCUS SHUMARDII / SHUMARD OAK (2 TREES)	3,180 SF

NOTE: REFER TO THE PLANT SCHEDULE FOR TREE CODES IDENTIFYING SPECIES AND CORRESPONDING LOCATIONS ON THE PLAN

CITY LANDSCAPE REQUIREMENTS (NR-LM)

TOTAL SITE AREA (10 AC):	399,064 SF
BUILDING AREA:	- 67,892 SF
NET AREA:	331,172 SF

NON-RESIDENTIAL LIGHT MANUFACTURING STANDARDS :
MUST PROVIDE A MINIMUM LANDSCAPE AREA OF 15% IF THE TOTAL NET LOT AREA = 331,172 X 0.15 = 49,675 SF
REQUIRED / PROVIDED LANDSCAPE 49,675 SF (15%) / 73,740 SF (18.5%) **(COMPLIANT)**

REQUIRED VEGETATIVE COVERAGE: IDO 5-6 (C)(2)(c)
LANDSCAPE COVERAGE REQUIREMENTS SPECIFY TREE CANOPIES AND GROUND-LEVEL PLANTS SHALL COVER A MINIMUM OF 75% OF THE TOTAL LANDSCAPE AREA, A MINIMUM OF 25% SHALL BE PROVIDED AS GROUND-LEVEL PLANTS (SHRUB,GRASSES, ETC) OF THE REQUIRED VEGETATIVE COVERAGE.

REQUIRED PROVIDED LIVE VEGETATIVE COVERAGE 37,257 SF (75%) / 40,836 SF (83%) **(COMPLIANT)**
REQUIRED PROVIDED GROUND LEVEL COVERAGE 12,418 SF (25%) / 19,651 SF (61%) **(COMPLIANT)**

STREET FRONTAGE LANDSCAPING:
TREES ARE REQUIRED ALONG STREET FRONTAGES EVERY (25') ON CENTER.
- 1,400 LF OF LOT FRONTAGE / 25 = 56 TREES REQUIRED / 56 TREES PROPOSED **(COMPLIANT)**

PLANTING SHALL MEET THE MINIMUM SIZE REQUIREMENTS LISTED IN TABLE 5-6-3.

PARKING LOT INTERIOR REQUIREMENTS:
AT LEAST (10%) OF THE PARKING LOT AREA OF LOTS CONTAINING 50 OR FEW SPACES, AND AT LEAST (15%) OF THE PARKING LOT AREAS OF LOTS CONTAINING 50 OR MORE SPACES SHALL BE LANDSCAPED.

(1) TREE IS REQUIRED PER (10) PARKING SPACES
- 55 PARKING STALLS / 10 = 5.5 TREES REQUIRED / 6 TREES PROPOSED **(COMPLIANT)**

AT LEAST (75%) OF THE REQUIRED PARKING AREA TREES SHALL BE DECIDUOUS CANOPY-TYPE SHADE TREES, CAPABLE OF ACHIEVING A MATURE CANOPY DIAMETER OF AT LEAST (25') **(COMPLIANT)**

GRAVEL MULCH COVERAGE:
LANDSCAPE SHALL APPLY PURSUANT TO 5-6(C)(5)(C) THE USE OF GRAVEL OR CRUSHER FINES AS GROUND COVER IS LIMITED TO A MAXIMUM OF 75% OF ANY LANDSCAPED AREA

REQUIRED: 37,257 SF (NO MORE THAN 75%)
PROVIDED: 36,787 SF (74%) **(COMPLIANT)**

ADDITIONAL NOTES:
ALL LANDSCAPING IS PLACED WITHIN PROPERTY LINES
ALL LANDSCAPING SHALL NOT BE PLACED WITHIN 10 FEET IN ANY DIRECTION OF THE CENTERLINE O A SEWER OR WATER LINE **(COMPLIANT)**

PLANT SCHEDULE

SYMBOL	CODE	QTY	BOTANICAL / COMMON NAME	SIZE	ROOT
ORNAMENTAL TREES					
	CL-D	7	CHILOPSIS LINEARIS / DESERT WILLOW (10' RADIUS)	1.5" CAL	B & B
	FN-N	3	FORESTIERA NEOMEXICANA / NEW MEXICO PRIVET (6' RADIUS)	1.5" CAL	B & B
SHADE TREES					
	CO-H	13	CELTIS OCCIDENTALIS / COMMON HACKBERRY (15' RADIUS)	2" CAL	B & B
	GD-E	17	GYMNOCLADUS DIOICA 'ESPRESSO' / KENTUCKY COFFEETREE (15' RADIUS)	2" CAL	B & B
	PC-C	17	PISTACIA CHINENSIS / CHINESE PISTACHE (11.5' RADIUS)	2" CAL	B & B
	JD-A	3	PLATANUS WRIGHTII / ARIZONA SYCAMORE (15' RADIUS)	2" CAL	B & B
	QS-S	2	QUERCUS SHUMARDII / SHUMARD OAK (22.5' RADIUS)	2" CAL	B & B
	QG-A	12	ROBINIA PSEUDOACACIA / BLACK LOCUST (11.5' RADIUS)	2" CAL	B & B
SHRUBS					
	AW	82	AGAVE WEBERI / WEBER AGAVE	5 GAL	CONT
	AF	142	ARTEMISIA FILIFOLIA / SAND SAGEBRUSH	5 GAL	CONT
	ET	52	ERICAMERIA LARICIFOLIA / TURPENTINE BUSH	5 GAL	CONT
	RY	145	HESPERALOE PARVIFLORA / RED YUCCA	5 GAL	CONT
	KI	10	KRASCHENINNIKOVIA LANATA / WINTERFAT	5 GAL	CONT
	CB	191	LARREA TRIDENTATA / CREOSOTE BUSH	5 GAL	CONT
	TR	177	LEUCOPHYLLUM FRUTESCENS / TEXAS RANGER	5 GAL	CONT
	LL	92	LEUCOPHYLLUM LANGMANIAE / LANGMAN'S SAGE	5 GAL	CONT
	BG	190	NOLINA MICROCARPA / BEARGRASS	5 GAL	CONT
	RO	66	ROSMARINUS OFFICINALIS / ROSEMARY	5 GAL	CONT
	SM	32	SALVIA CHAMAEDRYOIDES / MEXICAN BLUE SAGE	5 GAL	CONT
	SG	17	SALVIA GREGGII / AUTUMN SAGE	5 GAL	CONT
PERENNIALS					
	CH	161	COTONEASTER HORIZONTALIS / ROCKSPRAY COTONEASTER	1 GAL	CONT
	MB	283	MELAMPODIUM LEUCANTHUM / BLACKFOOT DAISY	1 GAL	CONT

SHEET NOTES:

REVISIONS:

NO.	DATE	INITIALS	NOTES
1	10/30/2024	ARA	CITY SUBMITTAL #1
2	08/26/2025	ARA	CITY SUBMITTAL #2
3			
4			
5			
6			
7			
8			

PROFESSIONAL SEAL:

STATE OF NEW MEXICO
DANIELLE P. PIERQUET
LA-2024-0016
REGISTERED LANDSCAPE ARCHITECT

08/26/2025

ISG

THIS DOCUMENT IS THE PROPERTY OF I & S GROUP, INC. AND MAY NOT BE USED, COPIED OR DUPLICATED WITHOUT PRIOR WRITTEN CONSENT.

SHEET NOT VALID UNLESS THIS TEXT IS COLOR.

PROJECT

U-HAUL

PR-2023-008710

ALBUQUERQUE NEW MEXICO

SITE ADDRESS:
U-Haul Moving & Storage
8200 JEFFERSON ST

SHEET CONTENTS:

ALTERNATIVE PLANTING PLAN

824071

DRAWN:	AE	C5-11
CHECKED:	PN	
DATE:	--/--/--	

28816 C5 - LAND

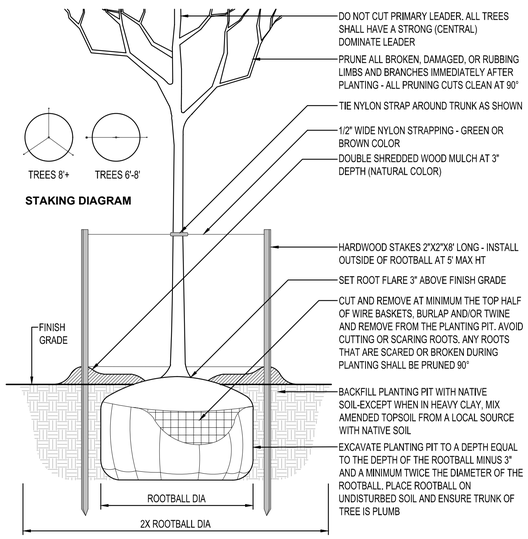

DECIDUOUS TREE PLANTING
NTS

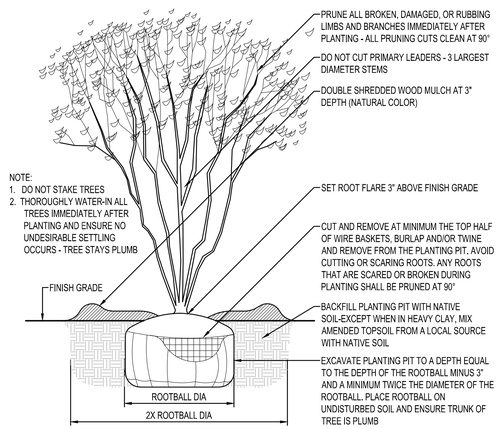

MULTI-STEM TREE PLANTING
NTS

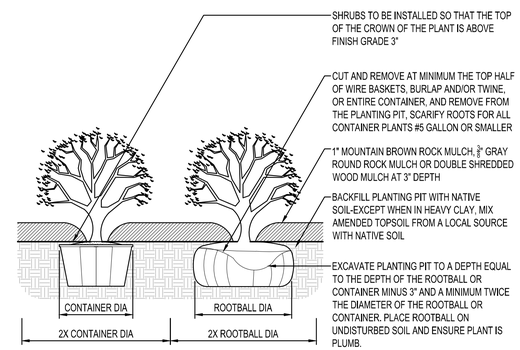

SHRUB PLANTING
NTS

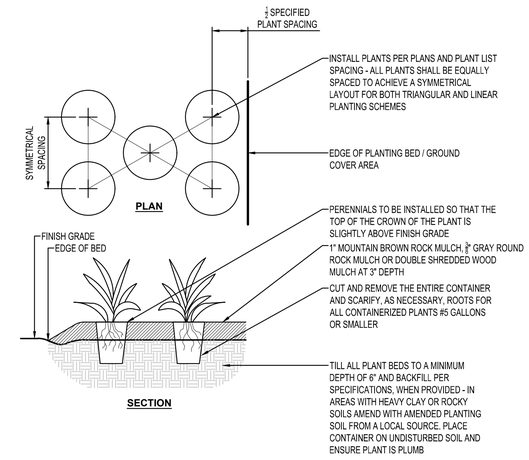

PERENNIAL PLANTING
NTS

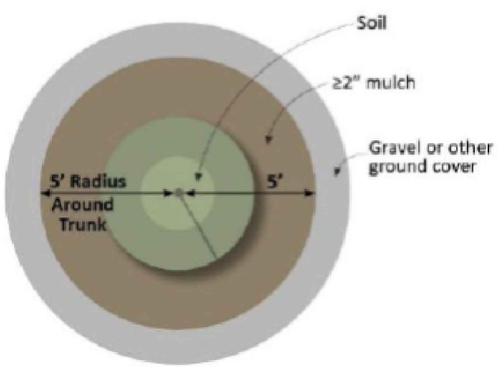

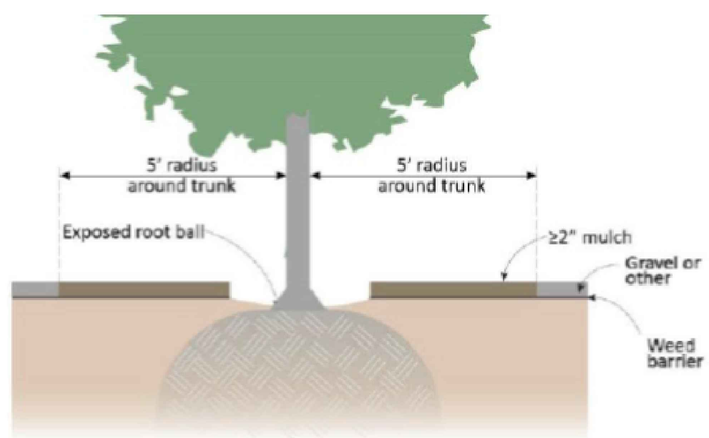

TREE MULCHING DETAIL
NTS

PLANTING NOTES

1. COORDINATE LOCATION OF ALL UTILITIES (LINES, DUCTS, CONDUITS, SLEEVES, FOOTINGS, ETC.) WITH LOCATIONS OF PROPOSED LANDSCAPE ELEMENTS (FENCE, FOOTINGS, TREE ROOTBALLS, ETC.). CONTRACTOR SHALL REPORT ANY DISCREPANCIES TO OWNER'S REPRESENTATIVE PRIOR TO CONTINUING WORK.
2. SAVE AND PROTECT ALL EXISTING TREES NOT NOTED TO BE REMOVED.
3. REMOVE ALL CONSTRUCTION DEBRIS AND MATERIALS INJURIOUS TO PLANT GROWTH FROM PLANTING PITS AND BEDS PRIOR TO BACKFILLING WITH PLANTING MIX.
4. REFER TO PLANTING DETAILS FOR AMENDED SOIL DEPTH IN PLANTING BEDS AND SURROUNDING TREES.
5. FIELD STAKE PLANTINGS ACCORDING TO PLAN. OWNER'S REPRESENTATIVE SHALL APPROVE ALL PLANT LOCATIONS PRIOR TO INSTALLATION. OWNER'S REPRESENTATIVE RESERVES THE RIGHT TO REVISE PLANTING LAYOUT AT TIME OF INSTALLATION.
6. ALL PLANT MATERIALS SHALL BE TRUE TO THEIR SCIENTIFIC NAME AND SIZE AS INDICATED IN THE PLANT SCHEDULE.
7. IF DISCREPANCIES EXIST BETWEEN THE NUMBER OF PLANTS DRAWN ON THE PLANTING PLAN AND THE NUMBER OF PLANTS IN THE SCHEDULE, THE PLANTING PLAN SHALL GOVERN.
8. ANY PROPOSED SUBSTITUTIONS OF PLANT SPECIES SHALL BE MADE WITH PLANTS OF EQUIVALENT OVERALL FORM, HEIGHT, BRANCHING HABIT, FLOWER, LEAF, COLOR, FRUIT AND CULTURE, AND ONLY AFTER WRITTEN APPROVAL OF THE OWNER'S REPRESENTATIVE.
9. ALL PLANT MATERIALS MUST CONFORM TO AMERICAN STANDARDS FOR NURSERY STOCK (ANSI Z60.1), LATEST EDITION PUBLISHED BY THE AMERICAN ASSOCIATION OF NURSERYMEN, WASHINGTON D.C. LARGER SIZED PLANT MATERIALS OF THE SPECIES LISTED MAY BE USED IF THE STOCK CONFORMS TO ANSI Z60.1.
10. ALL PLANT MATERIAL SHALL BE GUARANTEED BY THE CONTRACTOR TO BE IN A LIVE AND HEALTHY GROWING CONDITION FOR ONE FULL GROWING SEASON (ONE YEAR) AFTER FINAL PROJECT ACCEPTANCE OR SHALL BE REPLACED BY THE CONTRACTOR FREE OF CHARGE WITH THE SAME GRADE AND SPECIES.
11. ALL TREES SHALL HAVE A STRONG CENTRAL LEADER. ANY TREES DEEMED NOT TO HAVE A STRONG CENTRAL LEADER SHALL BE REJECTED.
12. CONTRACTOR IS RESPONSIBLE FOR ALL DAMAGE DUE TO CONSTRUCTION OPERATIONS. ANY AREAS THAT ARE DISTURBED SHALL BE RESTORED TO ITS ORIGINAL CONDITION AT NO ADDITIONAL COST TO THE OWNER.
13. PROVIDE ROCK MULCH SURROUNDING ALL PROPOSED TREES (5' Ø) AND WITHIN PLANTING BEDS TO A 3" MINIMUM DEPTH AS SHOWN IN TREE PLANTING DETAIL. DO NOT USE AN UNDERLAYMENT SUCH AS PLASTIC SHEET OR LANDSCAPE FABRIC. APPLY PRE-EMERGENT TO ALL PLANTING BEDS PRIOR TO MULCHING. REFER TO PLANS FOR ADDITIONAL DETAILS. REFER TO STORMWATER DETAILS FOR BASIN CONSTRUCTION AND MULCH APPLICATION.
14. MULCHING MATERIAL SHALL BE 1" MOUNTAIN BROWN ROCK MULCH OR 3/8" GRAY ROUND ROCK MULCH AT 3" DEPTH, WITH NO INDIVIDUAL PIECES LARGER THAN 3", FREE OF GROWTH OR GERMINATION INHIBITING INGREDIENTS, 3" MINIMUM DEPTH. MINIMUM DEPTHS AT LOCATIONS INDICATED ON DRAWINGS.
15. CONTRACTOR SHALL PROVIDE SAMPLE OF MULCH TO BE APPROVED BY THE LANDSCAPE ARCHITECT.
16. INDICATED QUANTITIES ARE ESTIMATES AND SHALL BE CONFIRMED BY THE CONTRACTOR.
17. ADJUST SPACING OF PLANT MATERIALS AROUND ADJACENT UTILITY STRUCTURES.

SHEET NOTES:

REVISIONS:

NO.	DATE	INITIALS	NOTES
1	10/30/2024	ARA	CITY SUBMITTAL #1
2	06/26/2025	ARA	CITY SUBMITTAL #2
3			
4			
5			
6			
7			
8			

PROFESSIONAL SEAL:

RYAN J. ANDERSON
NEW MEXICO
28792
PROFESSIONAL ENGINEER

08/26/2025

ISG

THIS DOCUMENT IS THE PROPERTY OF I & S GROUP, INC. AND MAY NOT BE USED, COPIED OR DUPLICATED WITHOUT PRIOR WRITTEN CONSENT.

SHEET NOT VALID UNLESS THIS TEXT IS COLOR

PROJECT

U-HAUL

PR-2023-008710

ALBUQUERQUE NEW MEXICO

SITE ADDRESS:
U-Haul Moving & Storage
8200 JEFFERSON ST

SHEET CONTENTS:

PLANTING NOTES AND DETAILS

824071

DRAWN:	GBV	C5-30
CHECKED:	ARA	
DATE:	--/--/--	

28816 C5 - LAND

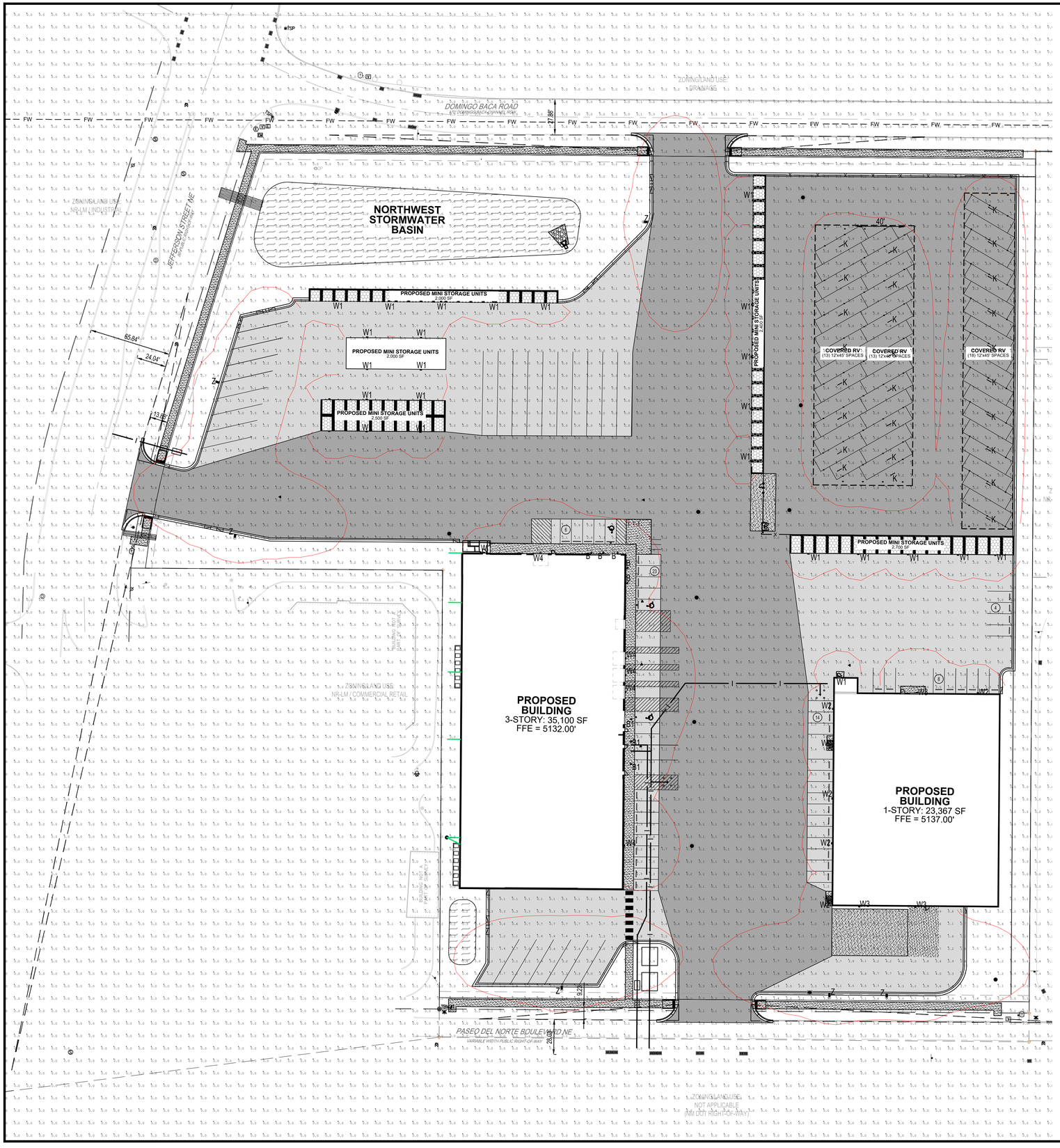

LIGHT FIXTURE SCHEDULE

SYMBOL	TYPE	MANUFACTURER	MODEL NUMBER	DESCRIPTION	LAMP INFORMATION	HEIGHT ABOVE GRADE
	B	LITHONIA	VCPG-V4-P1-30K-80CRI-T5E-MVOLT-SRM	SURFACE CIRCULAR	(1) 3,580 LUMENS 27 WATT LED	9'-0"
	B1	LITHONIA	VCPG-V4-P1-40K-80CRI-T5E-MVOLT-SRM	SURFACE CIRCULAR	(1) 3,580 LUMENS 27 WATT LED	14'-0"
	K	LITHONIA	CSVT-L48-AL03-MVOLT-SWW3-80CRI	SURFACE LINEAR	(1) 5,000 LUMENS 42 WATT LED	14'-0"
	W	LITHONIA	WST-LED-P1-40K-VW-MVOLT	WALLPACK FULL CUTOFF	(1) 1,700 LUMENS 12 WATT LED	9'-0"
	W1	LITHONIA	WST-LED-P1-40K-VW-MVOLT	WALLPACK FULL CUTOFF	(1) 1,700 LUMENS 12 WATT LED	10'-0"
	W2	LITHONIA	WST-LED-P1-40K-VW-MVOLT	WALLPACK FULL CUTOFF	(1) 1,700 LUMENS 12 WATT LED	13'-6"
	W3	LITHONIA	WST-LED-P3-40K-VFMVOLT	WALLPACK FULL CUTOFF	(1) 6,000 LUMENS 50 WATT LED	13'-6"
	W4	LITHONIA	WST-LED-P3-40K-VFMVOLT	WALLPACK FULL CUTOFF	(1) 6,000 LUMENS 50 WATT LED	20'-0"
	Z	LITHONIA	DSX2 LED-P2-40K-T2M-MVOLT-HS	POLE MOUNTED SINGLE HEAD	(1) 24,600 LUMENS 179 WATT LED	25'-0"

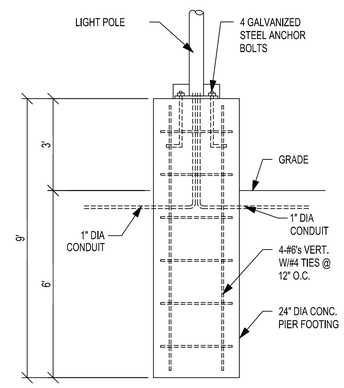

** LIGHT POLE BASE INSTALLED AND PROVIDED BY ELECTRICAL CONTRACTOR

LIGHT POLE BASE
NTS

NOTE: THIS PROJECT IS LOCATED 1.1 MILES FROM THE BALLOON FIESTA PARK (REFER TO IDO 3-4-K AS IT IS ABOVE THE 330 FT REQUIREMENT OF LIGHT POLES BEING 20 FT OR LESS.

IDO 5-8 STATES THAT COMMERCIAL DISTRICT SHALL HAVE A MAX OF 25FT LIGHT POLE

N

0 40 80
SCALE IN FEET

SHEET NOTES:

REVISIONS:

NO.	DATE	INITIALS	NOTES
1	10/30/2024	ARA	CITY SUBMITTAL #1
2	08/26/2025	ARA	CITY SUBMITTAL #2
3			
4			
5			
6			
7			
8			

PROFESSIONAL SEAL:

RYAN J. ANDERSON
NEW MEXICO
28792
PROFESSIONAL ENGINEER

08/26/2025

ISG

THIS DOCUMENT IS THE PROPERTY OF I & S GROUP, INC. AND MAY NOT BE USED, COPIED OR DUPLICATED WITHOUT PRIOR WRITTEN CONSENT.

SHEET NOT VALID UNLESS THIS TEXT IS COLOR.

PROJECT

U-HAUL

PR-2023-008710

ALBUQUERQUE NEW MEXICO

SITE ADDRESS:
U-Haul Moving & Storage
8200 JEFFERSON ST

SHEET CONTENTS:

SITE PHOTOMETRIC

824071

DRAWN:	GBV	**C6-10**
CHECKED:	ARA	
DATE:	--/--/--	

C6 SITE PHOTOMETRIC