BHI copy

CONSTRUCTION PLANS
FOR
WESTSIDE BLVD
SIERRITA ROAD TO NM 528
ALBUQUERQUE, NEW MEXICO

INDEX

SHEET NUMBER	DESCRIPTION
1	TITLE SHEET
2	TYPICAL SECTIONS
3-4	ROADWAY PLAN & PROFILE
5	GUARDRAIL PLAN
6-7	STORM DRAIN PLAN & PROFILE
8-9	GEOMETRY LAYOUT
10	CBC STRUCTURE SECTION
11-12	CBC INLET/OUTLET TRANSITION PLANS AND DETAILS
13-14	NMSHTD STANDARD SERIALS. FOR CBC; FOR CB-33
15	CHANNEL DIVERSION PLAN
16	WHEELCHAIR RAMP DETAIL
17-19	TRAFFIC CONTROL
20-24	PERMANENT SIGNING & STRIPING
25	LIGHTING PLAN
26	TRAFFIC SIGNAL & LIGHTING PLAN
27-32	TRAFFIC SIGNAL & LIGHTING DETAILS

DRB-95526

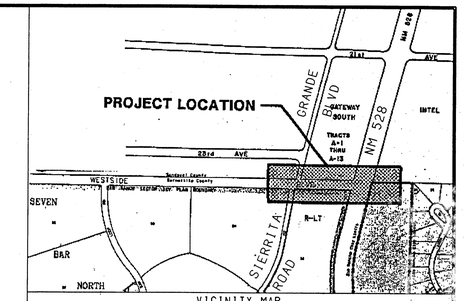

VICINITY MAP
NOT TO SCALE Z-A-13

NOTICE TO CONTRACTORS

1. ALL WORK DETAILED ON THESE PLANS TO BE PERFORMED UBDER CONTRACT SHALL. EXCEPT AS OTHERWISE STATED OR PROVIDED FOR HEREON. BE CONSTRUCTED IN ACCORDANCE WTIH THE CITY OF ALBUQUERQUE STANDARD SPECIFICATIONS FOR PUBLIC WORKS CONSTRUCTION. 1986 EDITION AND SHALL INCLUDE UPDATE NO. 6.
2. TWO WORKING DAYS PRIOR TO ANY EXCAVATION. THE CONTRACTOR MUST CONTACT NEW MEXICO ONE CALL SYSTEM (260-1990) FOR LOCATION OF EXISTING UTILITIES.
3. PRIOR TO CONSTRUCTION. THE CONTRACTOR SHALL EXCAVATE AND VERIFY THE HORIZONTAL AND VERTICAL LOCATIONS OF ALL OBSTRUCTIONS. SHOULD A CONFLICT EXIST. THE CONTRACTOR SHALL NOTIFY THE ENGINEER OR SURVEYOR IMMEDIATELY SO THAT THE CONFLICT CAN BE RESOLVED WITH A MINIMUM AMOUNT OF DELAY.
4. THREE (3) WORKING DAYS PRIOR TO BEGINNING CONSTRUCTION. THE CONTRACTOR SHALL SUBMIT TO CONSTRUCTION COORDINATION DIVISION A DETAILED CONSTRUCTION SCHEDULE. TWO (2) WORKING DAYS PRIOR TO CONSTRUCTION. THE CONTRACTOR SHALL OBTAIN A BARRICADING PERMIT FROM THE CONST. COORDINATION DIVISION. CONTRACTOR SHALL NOTIFY BARRICADE ENGINEER (768-2551) PRIOR TO OCCUPYING AN INTERSECTION. REFER TO SECTION 19 OF THE GENERAL CONDITIONS OF THE STANDARD SPECIFICATIONS.
5. ALL STREET STRIPING ALTERED OR DESTROYED SHALL BE REPLACED IN KIND BY CONTRACTOR TO LOCATION AND IN KIND AS EXISTING OR AS INDICATED BY THIS PLAN SET.
6. CONTRACTOR SHALL NOTIFY THE ENGINEER NOT LESS THAN SEVEN (7) DAYS PRIOR TO STARTING WORK IN ORDER THAT THE CITY SURVEYOR MAY TAKE NECESSARY MEASURES TO INSURE THE PRESERVATION OF SURVEY MONUMENTS. CONTRACTOR SHALL NOT DISTURB PERMANENT SURVEY MONUMENTS WITHOUT THE CONSENT OF THE CITY SURVEYOR AND SHALL NOTIFY THE CITY SURVEYOR AND BEAR THE EXPENSE OF REPLACING ANY THAT MAY BE DISTURBED WITHOUT PERMISSION. REPLACEMENT SHALL BE DONE ONLY BY THE CITY SURVEYOR. WHEN A CHANGE IS MADE IN THE FINISHED ELEVATIONS OF THE PAVEMENT OF ANY ROADWAY IN WHICH A PERMANENT SURVEY MONUMENT IS LOCATED CONTRACTOR SHALL. AT HIS OWN EXPENSE. ADJUST THE MONUMENT COVER TO THE NEW GRADE UNLESS OTHERWISE SPECIFIED. REFER TO SECTION 4.4. OF THE GENERAL CONDITIONS OF THE STANDARD SPECIFICATIONS.
7. ANY WORK WITHIN THE ARTERIAL ROADWAY REQUIRES TWENTY-FOUR HOUR CONSTRUCTION.
8. ALL WORK SHALL BE CONSTRUCTED IN ACCORDANCE WITH NEW MEXICO UTILITIES. INC. SPECIFICATIONS FOR WATER AND WASTEWATER FACILITIES (MOST RECENT REVISIONS).
9. THE CONTRACTOR SHALL NOTIFY NEW MEXICO UTILITIES (898-2661) THREE WORKING DAYS PRIOR TO BEGINNING THE CONSTRUCTION OF THE UTILITIES.

THE FOLLOWING NOTES ALSO APPLY WHEN CHECKED.

- ☒ ALL UTILITIES AND UTILITY SERVICE LINES SHALL BE INSTALLED PRIOR TO PAVING. BACKFILL COMPACTION SHALL BE ACCORDING TO SPECIFIED STREET USE.
- ☒ TACK COAT REQUIREMENTS SHALL BE DETERMINED BY THE CITY ENGINEER.
- ☒ SIDEWALKS AND WHEELCHAIR RAMPS WITHIN THE CURB RETURNS SHALL BE CONSTRUCTED WHENEVER A NEW CURB RETURN IS CONSTRUCTED.
- ☒ IF CURB IS DEPRESSED FOR A DRIVEPAD. THE DRIVEPAD SHALL BE CONSTRUCTED PRIOR TO ACCEPTANCE OF A CURB AND GUTTER.
- ☒ ALL STORM DRAINAGE FACILITIES SHALL BE COMPLETED PRIOR TO FINAL ACCEPTANCE.
- ☒ THE REQUESTOR OR DEVELOPER SHALL BE RESPONSIBLE FOR REPAIR OR REPLACEMENT OF ALL CURB AND GUTTER OR SIDEWALK DAMAGED AFTER APPROVAL BY THE CITY ENGINEER OF WORK COMPLETED BY THE CONTRACTOR.

REV.	SHEETS	CITY ENGINEER	DATE	USER DEPARTMENT	DATE	USER DEPARTMENT	DATE

ENGINEERS STAMP & SIGNATURE

APPROVALS	ENGINEER	DATE
DRC Chairman		
Transportation		
Water/Wastewater	[illegible]	8-28-96
Hydrology		11-17-96
Parks		
Constr. Mngmt.		
AMAFCA		
NMUI		11-27-96
City Project No.	3725	

APPROVED FOR CONSTRUCTION

City Engineer Date

Sheet 1 Of 32

BOHANNAN-HUSTON INC.
ENGINEERS•PLANNERS•PHOTOGRAMMETRISTS•SURVEYORS•LANDSCAPE ARCHITECTS
ALBUQUERQUE LAS CRUCES SANTA FE

TRANS+ET9534314.SHEETS.GENERAL JCOACVRSHT.GRF

PRINTED 10/3/96 BHI OFFICE COPY (DO NOT REMOVE) 273

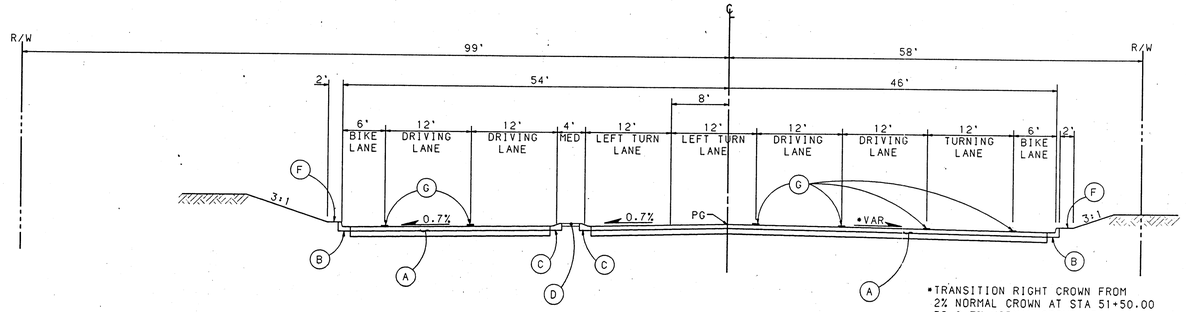

*TRANSITION RIGHT CROWN FROM 2% NORMAL CROWN AT STA 51+50.00 TO 0.7% NORMAL CROWN AT STA 52+50.00

WESTSIDE BLVD TYPICAL SECTION
STA 51+02.25

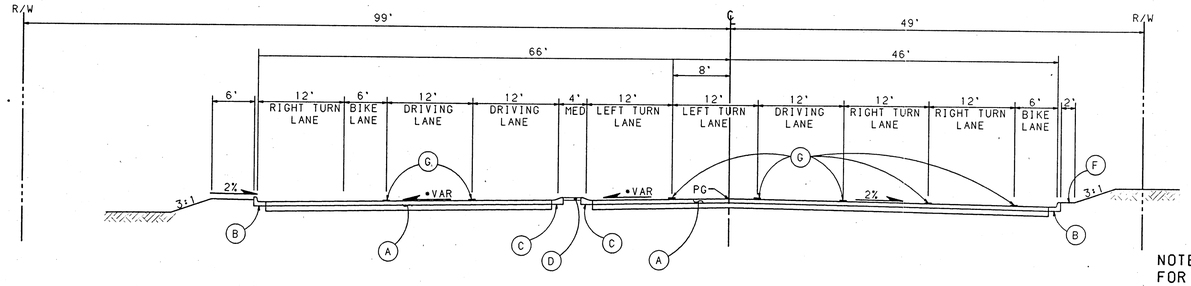

NOTE: SEE PLAN & PROFILE SHEETS 3 & 4 FOR SUPER ELEVATION TRANSITION

*TRANSITION LEFT CROWN FROM 2% NORMAL CROWN AT STA 48+40.00 TO 0.7% SUPER CROWN AT STA 50+00.00

WESTSIDE BLVD TYPICAL SECTION
STA 51+02.25
TRANSITION FROM STA 47+53.21 TO STA 51+02.25 LT & RT
TRANSITION FROM STA 51+02.25 TO STA 52+40.73 LT & RT

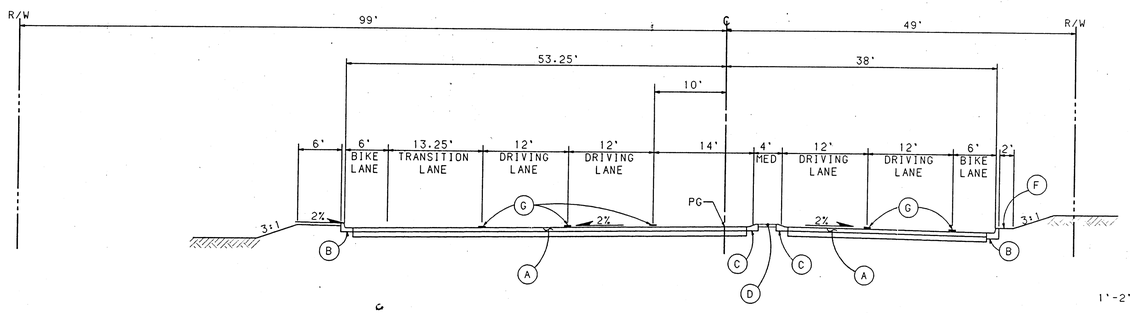

WESTSIDE BLVD TYPICAL SECTION
STA 47+53.21
TRANSITION FROM STA 45+30.82 TO STA 47+53.21 LT & RT

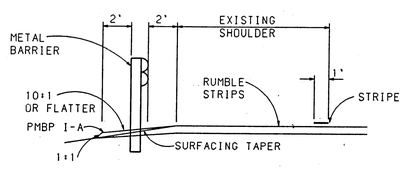

METAL BARRIER PLACEMENT DETAIL
STA 127+48.00 TO STA 127+66.75 LT NM 528
STA 129+83.00 TO STA 131+45.50 LT NM 528

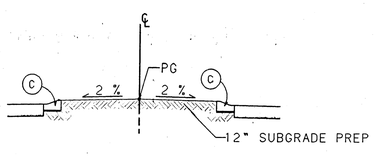

MEDIAN DETAIL
NTS

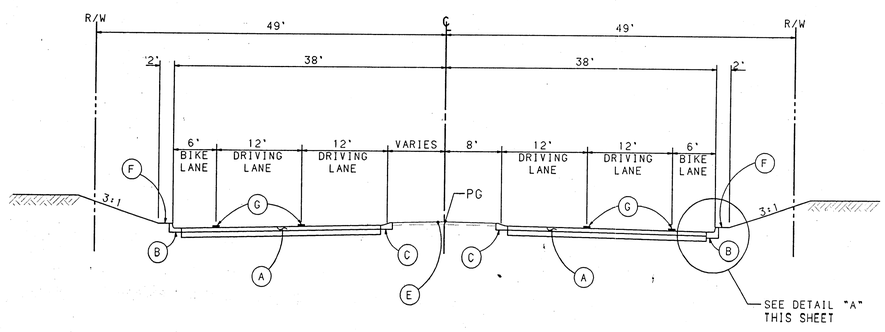

WESTSIDE BLVD TYPICAL SECTION
STA 45+30.82

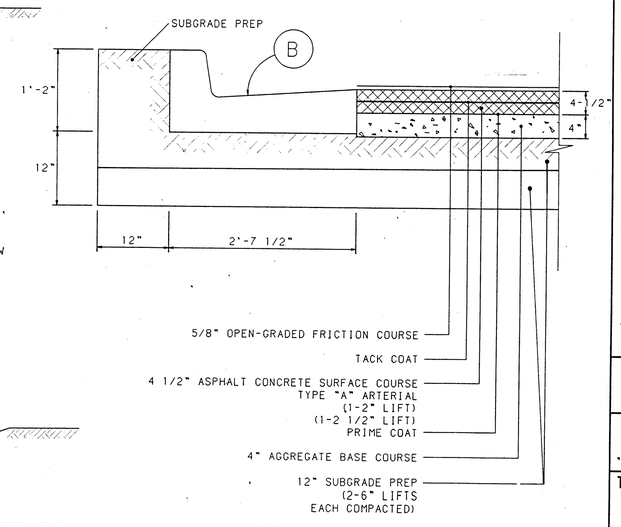

DETAIL "A"

KEY NOTES

- (A) BUILD NEW ARTERIAL PAVEMENT SEE DETAIL "A"
- (B) BUILD NEW CONCRETE STD CURB & GUTTER PER COA SD 2415
- (C) BUILD NEW CONCRETE MOUNTABLE MEDIAN CURB & GUTTER PER COA SD 2415
- (D) BUILD COLORED CONCRETE MEDIAN PAVEMENT-4"SEE SHTS 3 & 4 FOR LIMITS
- (E) BUILD EARTH GRADED MEDIAN
- (F) BUILD EARTH BERM
- (G) BUILD LANE STRIPE

NOTES

1. THE CONTRACTOR SHALL FIELD VERIFY ALL EXISTING UTILITY LOCATIONS AND NOTIFY THE ENGINEER IMMEDIATELY OF ANY DISCREPANCIES.
2. ALL CURVE DATA AND DIMENSIONS REFER TO FACE OF CURB UNLESS OTHERWISE SPECIFIED.
3. CONTRACTOR IS RESPONSIBLE FOR REPAIR AND/OR REPLACEMENT OF ALL UTILITYCONDUITS AND EXISTING LINES.
4. ANY ADDITIONAL GRADING REQUIRED TO MATCH PROPOSED STREET GRADES SHALL BE INCIDENTAL TO PAVING ITEMS.
5. CONTRACTOR SHALL PARK EQUIPMENT AND VEHICLES AS NOT TO INTERFERE WITH NORMAL ACTIVITIES OF RESIDENTS OR OTHER CONTRACTORS ON SITE.
6. ANY DAMAGE TO THE EXISTING FACILITIES (CURB AND GUTTER, PAVEMENT, CONDUITS, LANDSCAPING, UTILITY LINES, ETC.) DURING CONSTRUCTION SHALL BE REPLACED AT THE CONTRACTOR S EXPENSE.
7. WHEEL CHAIR RAMPS SHALL BE CONSTRUCTED PRIOR TO ACCEPTANCE OF CURB AND GUTTER.
8. THE EARTHWORK HAUL ON THIS PROJECT WILL BE CONSIDERED AS INCIDENTAL TO THE CONTRACT PRICE FOR ITEMS 203000 - UNCLASSIFIED EXCAVATION", AS APPLICABLE, AND NO SEPARATE MEASUREMENT OR PAYMENT WILL BE MADE THEREFOR.
9. REMOVAL OF EXCESS MATERIAL FROM SITE IS INCIDENTAL.

AS-BUILT INFORMATION

CONTRACTOR	DATE
WORK STAKED BY	DATE
INSPECTOR'S ACCEPTANCE BY	DATE
FIELD VERIFICATION BY	DATE
DRAWINGS CORRECTED BY	DATE

MICRO-FILM INFORMATION

RECORDED BY	DATE
NO.	

BENCH MARKS

SURVEY INFORMATION

NO.	FIELD NOTES BY	DATE

ENGINEER'S SEAL

NO.	DATE	REMARKS	BY
		REVISIONS	

DESIGN

DESIGNED BY BHI/MAH DATE 1-96
DRAWN BY BHI/MAH DATE 1-96
CHECKED BY BHI/MAH DATE 1-96

BOHANNAN-HUSTON INC.
ENGINEERS • PLANNERS • PHOTOGRAMMETRISTS • SURVEYORS • LANDSCAPE ARCHITECTS
ALBUQUERQUE LAS CRUCES SANTA FE

CITY OF ALBUQUERQUE
PUBLIC WORKS DEPARTMENT
ENGINEERING GROUP

TITLE: WESTSIDE BLVD TYPICAL SECTIONS

DESIGN REVIEW COMMITTEE	CITY ENGINEER APPROVAL	LAST DESIGN UPDATE	MO./DAY/YR.	MO./DAY/YR.

CITY PROJECT NO.	ZONE MAP NO.	SHEET	OF
3725	A-13-Z	2	32

TRANS•CT9534314.SHEETS.GENERAL]TYPSEC.GRF

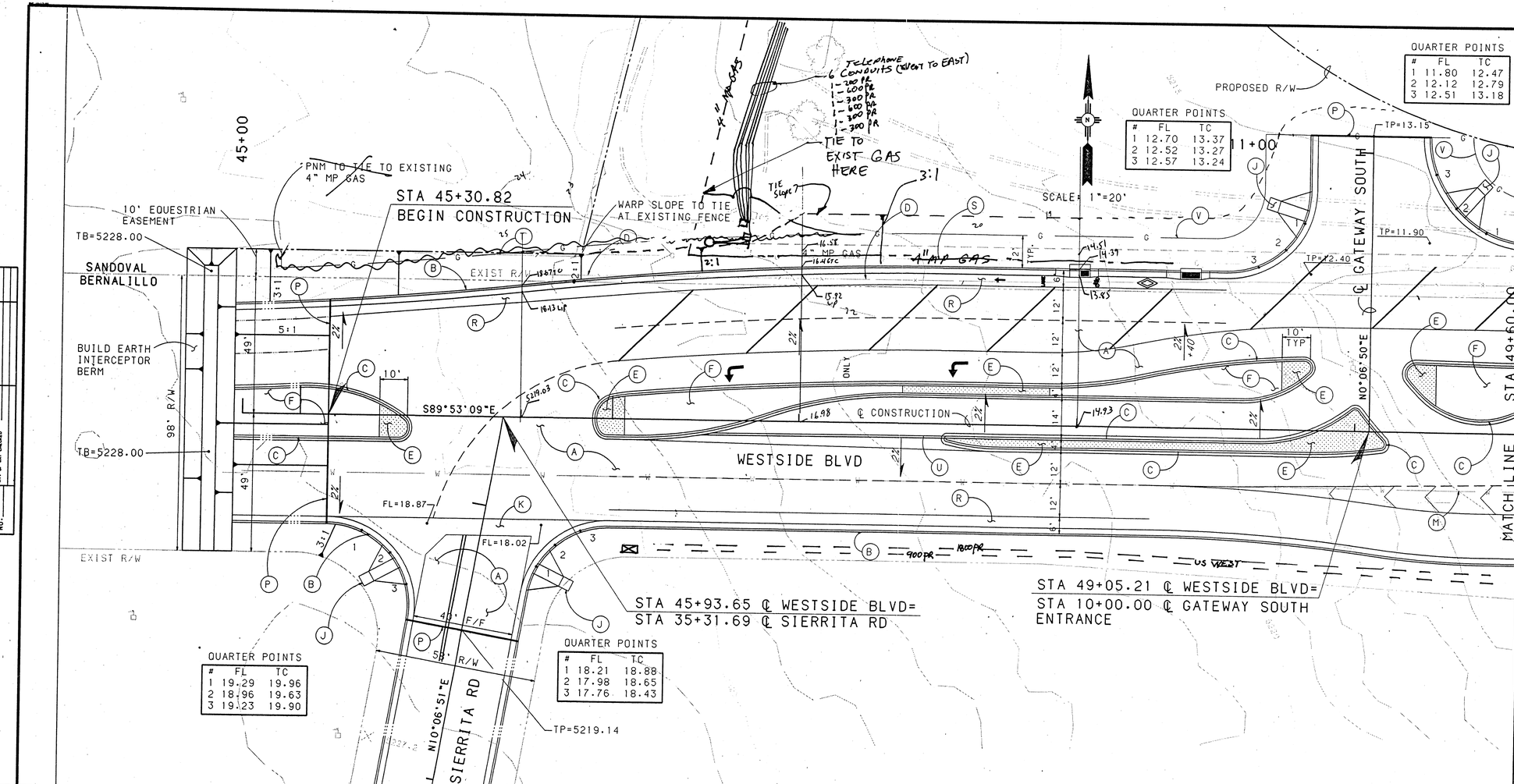

QUARTER POINTS

#	FL	TC
1	19.29	19.96
2	18.96	19.63
3	19.23	19.90

QUARTER POINTS

#	FL	TC
1	18.21	18.88
2	17.98	18.65
3	17.76	18.43

QUARTER POINTS

#	FL	TC
1	12.70	13.37
2	12.52	13.27
3	12.57	13.24

QUARTER POINTS

#	FL	TC
1	11.80	12.47
2	12.12	12.79
3	12.51	13.18

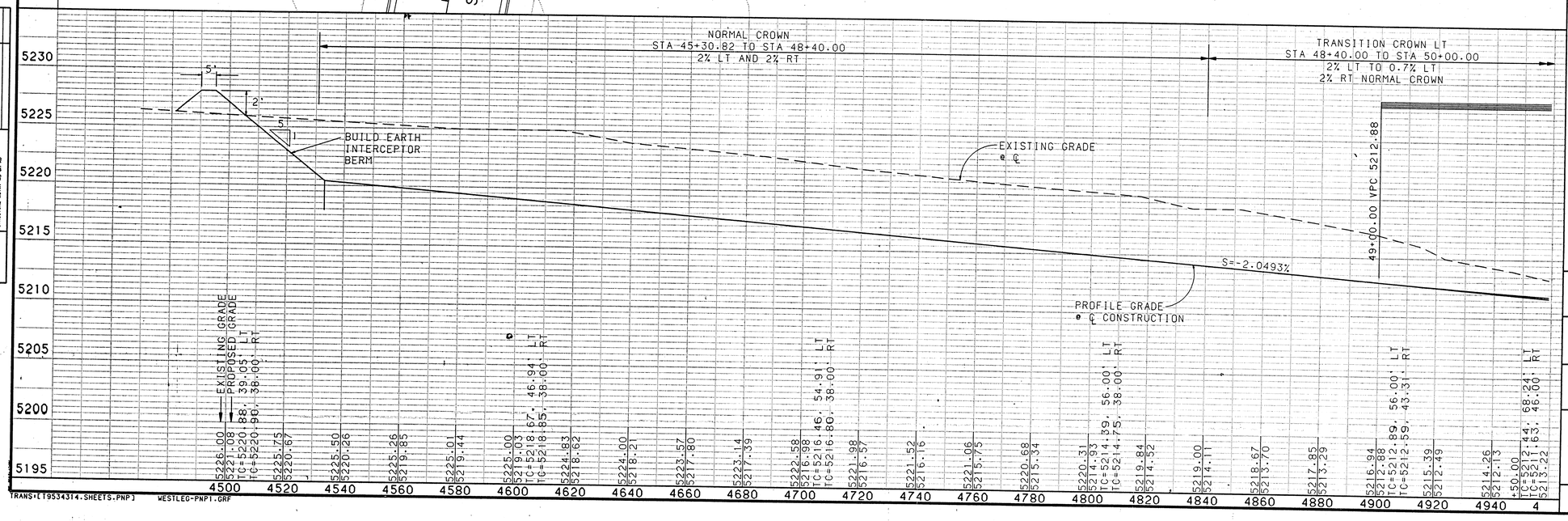

[TRANS+LT9534314.SHEETS.PNP] WESTLEG-PNP1.GRF

KEY NOTES

- (A) BUILD NEW ARTERIAL PAVEMENT SEE SHT 2
- (B) BUILD NEW CONCRETE STANDARD CURB & GUTTER PER COA SD 2415
- (C) BUILD NEW CONCRETE MOUNTABLE MEDIAN CURB & GUTTER PER COA SD 2415
- (D) REMOVE EXISTING FENCE
- (E) COLORED CONC MEDIAN PVMNT-4"
- (F) DIRT FILL
- (G) NOT USED
- (H) NOT USED
- (I) NOT USED
- (J) BUILD WHEELCHAIR RAMP SEE SHEET 16 FOR DETAIL
- (K) BUILD NEW CONCRETE VALLEY GUTTER PER COA SD 2420
- (L) NOT USED
- (M) EXISTING 18" WATERLINE
- (N) NOT USED
- (O) NOT USED
- (P) BUILD CONCRETE CUT OFF WALL PER COA SD 2415
- (Q) NOT USED
- (R) BUILD 6' BIKE LANE. SEE SHT 2
- (S) EXISTING 4" MP GAS LINE TO BE RELOCATED BY PNM
- (T) EXISTING FENCE TO REMAIN
- (U) BUILD EXTRUDED ASPHALT CURB
- (V) 4" MP GAS LINE (NEW LOCATION)

NOTES

1. THE CONTRACTOR SHALL FIELD VERIFY ALL EXISTING UTILITY LOCATIONS AND NOTIFY THE ENGINEER IMMEDIATELY OF ANY DISCREPANCIES.
2. ALL CURVE DATA AND DIMENSIONS REFER TO FACE OF CURB UNLESS OTHERWISE SPECIFIED.
3. CONTRACTOR IS RESPONSIBLE FOR REPAIR AND/OR REPLACEMENT OF ALL UTILITYCONDUITS AND EXISTING LINES.
4. ANY ADDITIONAL GRADING REQUIRED TO MATCH PROPOSED STREET GRADES SHALL BE INCIDENTAL TO PAVING ITEMS.
5. CONTRACTOR SHALL PARK EQUIPMENT AND VEHICLES AS NOT TO INTERFERE WITH NORMAL ACTIVITIES OF RESIDENTS OR OTHER CONTRACTORS ON SITE.
6. ANY DAMAGE TO THE EXISTING FACILITIES (CURB AND GUTTER, PAVEMENT, CONDUITS, LANDSCAPING, UTILITY LINES, ETC.) DURING CONSTRUCTION SHALL BE REPLACED AT THE CONTRACTOR S EXPENSE.
7. WHEEL CHAIR RAMPS SHALL BE CONSTRUCTED PRIOR TO ACCEPTANCE OF CURB AND GUTTER.

AS-BUILT INFORMATION

CONTRACTOR — DATE
STAKED BY — DATE
INSPECTOR'S ACCEPTANCE BY — DATE
FIELD INSPECTION BY — DATE
DRAWINGS CORRECTED BY — DATE

MICRO-FILM INFORMATION

RECORDED BY — DATE
NO. —

BENCH MARKS

A.C.S. 1 3/4" ALUMINUM DISK, STAMPED "A.C.S. BM. 2-S13 EPOXIED TO TOP OF CONCRETE BASE OF GALV STL POLE #IC-28 AT ANGLE PT. IN THE ELECTRIC TRANSMISSION 248' +/- NORTHERLY OF THE BERNALILLO/ SANDOVAL COUNTY LINE, 78.5' EASTERLY OF ℄ OF RIO RANCHO BLVD (SR 528) ON SW CORNER OF SAID CONC BASE. FIELD ELEV= 5215.872. SEE SHT 5 FOR LOCATION

SURVEY INFORMATION

FIELD NOTES

NO.	BY	DATE

ENGINEER'S SEAL

REGISTERED PROFESSIONAL ENGINEER

NO.	DATE	REMARKS	BY
		REVISIONS	

DESIGN

DESIGNED BY BHI/MAH — DATE 3-96
DRAWN BY BHI/CJT — DATE 3-96
CHECKED BY BHI/MAH — DATE 3-96

BOHANNAN-HUSTON INC.
ENGINEERS • PLANNERS • PHOTOGRAMMETRISTS • SURVEYORS • LANDSCAPE ARCHITECTS
ALBUQUERQUE LAS CRUCES SANTA FE

CITY OF ALBUQUERQUE
PUBLIC WORKS DEPARTMENT
ENGINEERING GROUP

TITLE: WESTSIDE BLVD
STA 45+30.00 TO STA 49+60.00
ROADWAY PLAN & PROFILE

3725 | A-13-Z | 3 | 32

PLAN — NOTE BOOK NO. — SURVEYED — PLOTTED — CALCULATED — PLANS CHECKED — ALIGNMENT CHECKED — R/W - W/ WAY CHECKED — BY — DATE

PROFILE — NOTE BOOK NO. — SURVEYED — PLOTTED — PLANS CHECKED — R/W - NOTED — STRUCTURE NOTATIONS CHKD — BY — DATE

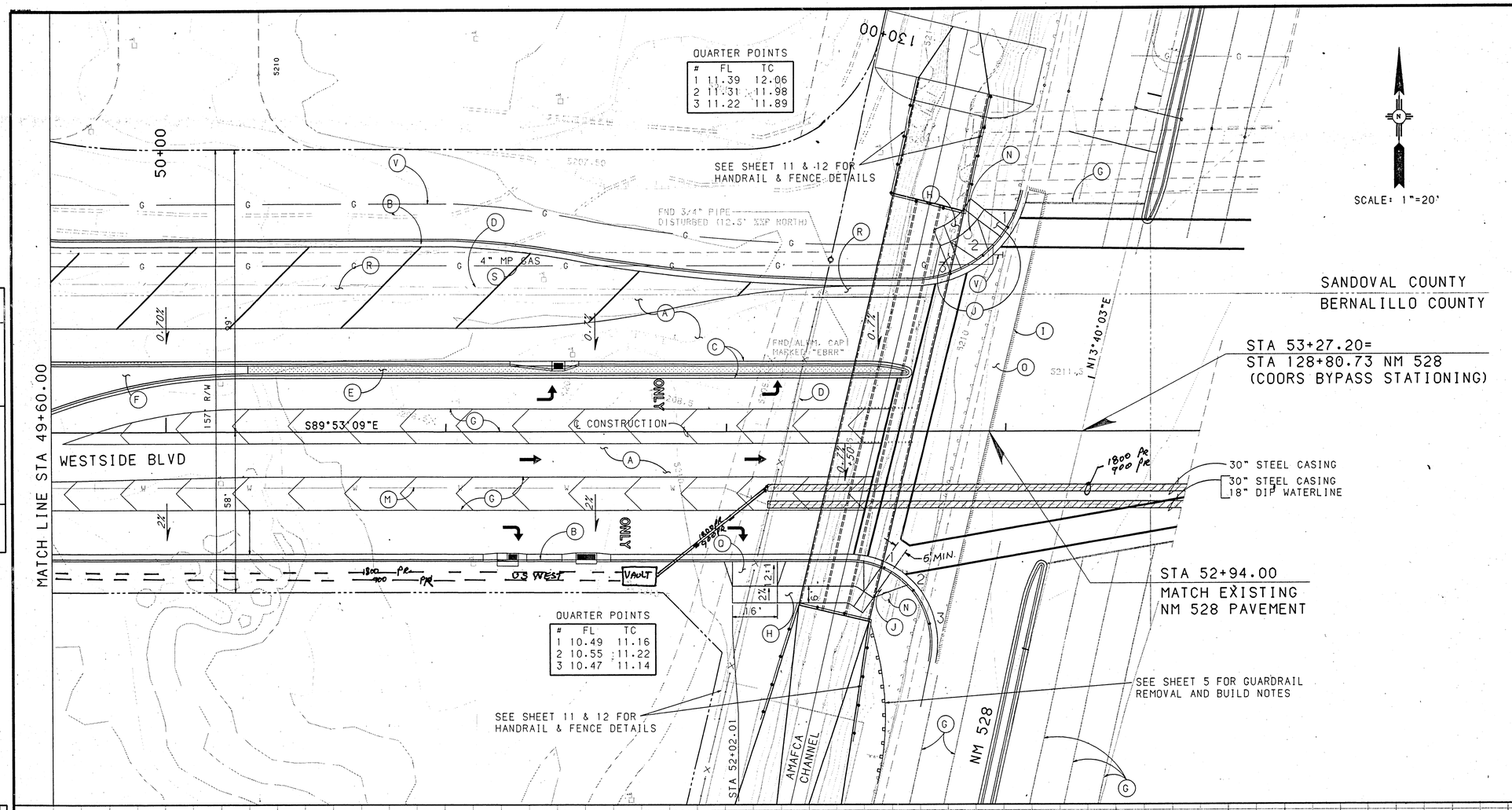

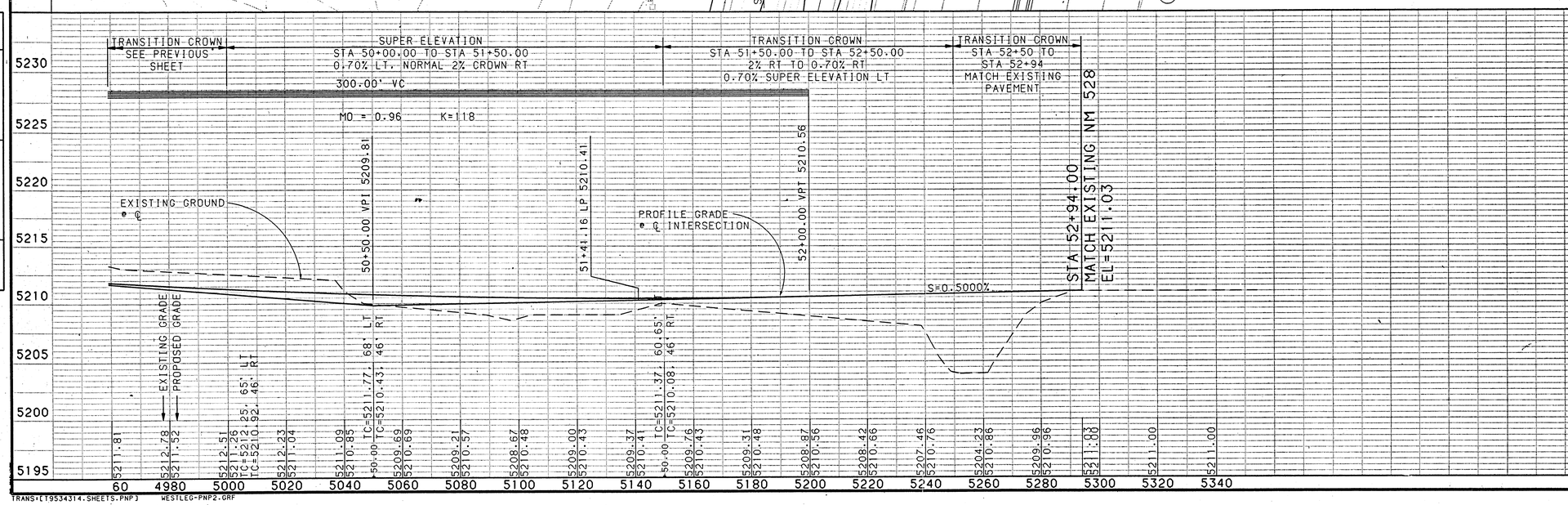

KEY NOTES

- (A) BUILD NEW ARTERIAL PAVEMENT SEE SHT 2
- (B) BUILD NEW CONCRETE STANDARD CURB & GUTTER PER COA SD 2415
- (C) BUILD NEW CONCRETE MOUNTABLE MEDIAN CURB & GUTTER PER COA SD 2415
- (D) REMOVE EXISTING FENCE
- (E) COLORED CONC MEDIAN PVMNT-4"
- (F) DIRT FILL
- (G) EXIST PVMNT STRIPE TO REMAIN
- (H) BUILD NEW 6' CONCRETE SIDEWALK.
- (I) SAWCUT EXISTING PAVEMENT
- (J) BUILD WHEELCHAIR RAMP SEE SHEET 16 FOR DETAIL
- (K) NOT USED
- (L) NOT USED
- (M) EXISTING 18" WATERLINE
- (N) EXISITING TRAFFIC SIGNAL FOUNDATION TO REMAIN
- (O) REMOVE EXISTING ASPHALT PAVEMENT SHOULDER
- (P) NOT USED
- (Q) BUILD 16' WIDE DRIVEPAD WITH 6" THICK SIDEWALK. PER COA SD.
- (R) BUILD 6' BIKE LANE. SEE SHT 2
- (S) EXISTING 4" MP GAS LINE TO BE RELOCATED BY PNM
- (T) NOT USED
- (U) NOT USED
- (V) 4" MP GAS LINE (NEW LOCATION)

NOTES

1. THE CONTRACTOR SHALL FIELD VERIFY ALL EXISTING UTILITY LOCATIONS AND NOTIFY THE ENGINEER IMMEDIATELY OF ANY DISCREPANCIES.
2. ALL CURVE DATA AND DIMENSIONS REFER TO FACE OF CURB UNLESS OTHERWISE SPECIFIED.
3. CONTRACTOR IS RESPONSIBLE FOR REPAIR AND/OR REPLACEMENT OF ALL UTILITYCONDUITS AND EXISTING LINES.
4. ANY ADDITIONAL GRADING REQUIRED TO MATCH PROPOSED STREET GRADES SHALL BE INCIDENTAL TO PAVING ITEMS.
5. CONTRACTOR SHALL PARK EQUIPMENT AND VEHICLES AS NOT TO INTERFERE WITH NORMAL ACTIVITIES OF RESIDENTS OR OTHER CONTRACTORS ON SITE.
6. ANY DAMAGE TO THE EXISTING FACILITIES (CURB AND GUTTER, PAVEMENT, CONDUITS, LANDSCAPING, UTILITY LINES, ETC.) DURING CONSTRUCTION SHALL BE REPLACED AT THE CONTRACTOR S EXPENSE.
7. WHEEL CHAIR RAMPS SHALL BE CONSTRUCTED PRIOR TO ACCEPTANCE OF CURB AND GUTTER.

AS-BUILT INFORMATION
CONTRACTOR DATE
WORK STAKED BY DATE
INSPECTOR'S ACCEPTANCE BY DATE
FIELD INSPECTION BY DATE
DRAWINGS CORRECTED BY DATE
MICRO-FILM INFORMATION
RECORDED BY DATE
NO. DATE
CORNER OF SAID CONC BASE. FIELD ELEV=
5215.872. SEE SHT-5 FOR LOCATION

BENCH MARKS
A.C.S. 1 3/4" ALUMINUM DISK. STAMPED
CONCRETE BASE OF GALV STL POLE #IC-28 AT ANGLE PT. IN THE ELECTRIC TRANSMISSION
248' +/- NORTHERLY OF THE BERNALILLO/SANDOVAL COUNTY LINE, 78.5' EASTERLY OF ℄ OF RIO RANCHO BLVD (SR 528) ON SW

SURVEY INFORMATION
FIELD NOTES
NO. BY DATE

SEAL
ENGINEER'S SEAL
STATE OF NEW MEXICO
RICHARD F. GREEN
10146
REGISTERED PROFESSIONAL ENGINEER

REVISIONS
NO. DATE REMARKS BY
DESIGN
DESIGNED BY BHI/MAH DATE 3-96
DRAWN BY BHI/CJT DATE 3-96
CHECKED BY BHI/MAH DATE 3-96

BOHANNAN-HUSTON INC.
ENGINEERS • PLANNERS • PHOTOGRAMMETRISTS • SURVEYORS • LANDSCAPE ARCHITECTS
ALBUQUERQUE LAS CRUCES SANTA FE

CITY OF ALBUQUERQUE
PUBLIC WORKS DEPARTMENT
ENGINEERING GROUP

TITLE: WESTSIDE BLVD
STA 49+60.00 TO STA 52+94.00
ROADWAY PLAN & PROFILE

3725 | A-13-Z | 4 | 32

PLAN: NOTE BOOK NO.: SURVEYED PLOTTED DRAWN BY CHECKED ALL OF MY CHECKED BY DATE

PROFILE: NOTE BOOK NO.: SURVEYED PLOTTED GRADES CHECKED A.C.S. MONUMENTS STRUCTURE DATA FILED BY DATE

TRANS*[T9534314.SHEETS.PNP] WESTLEG-PNP2.GRF

Tim McMahan 883-1174 Brown & Associates
Rick Redman PDI 884-8877

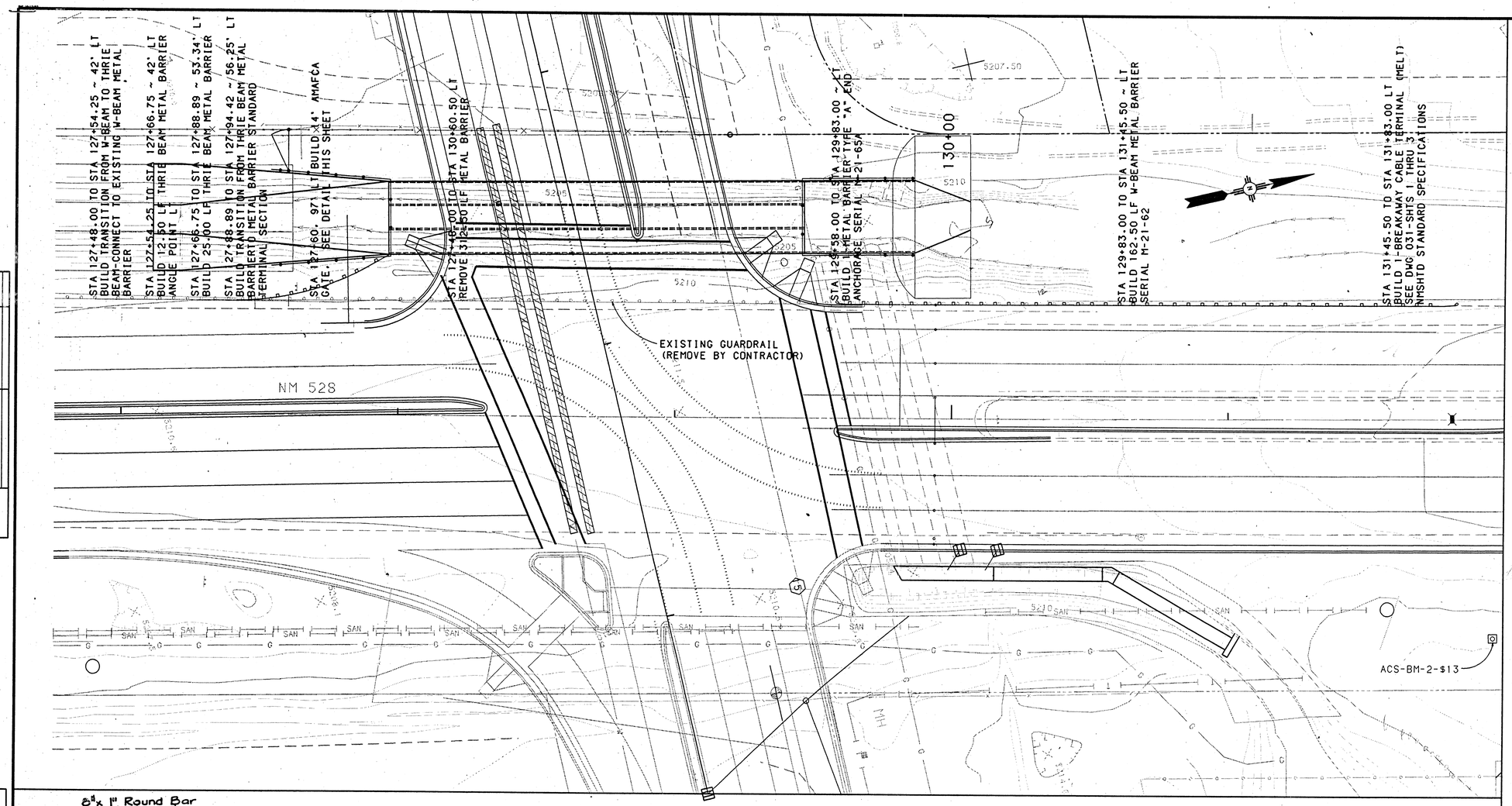

NOTE: SALVAGE ALL GUARD RAIL, POSTS, & BOLTS FOR AMAFCA. CALL LARRY TRUJILLO @ 884-2215 TO ARRANGE PICK UP BY AMAFCA.

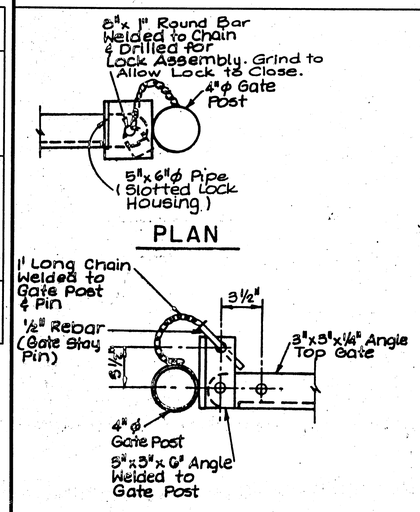

DETAIL A

Scale: 1 1/2" = 1'-0"

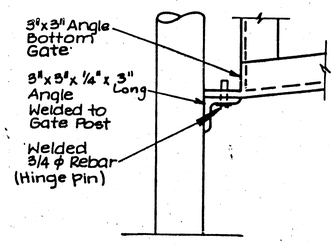

DETAIL B

Scale: 1 1/2" = 1'-0"

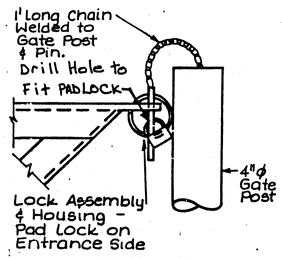

ELEVATION

DETAIL C

Scale: 1 1/2" = 1'-0"

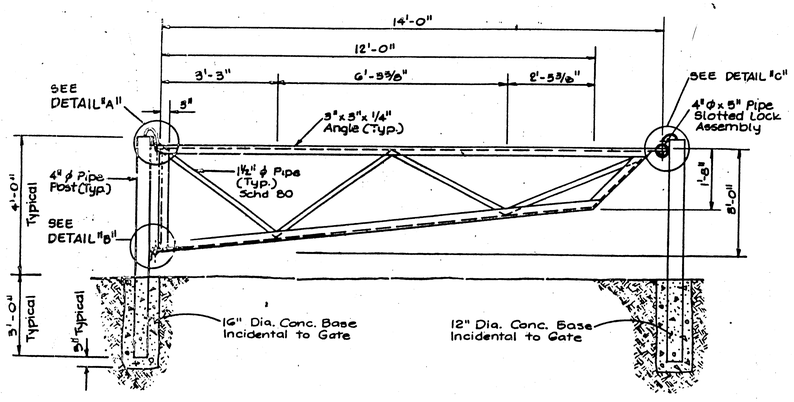

GATE ELEVATION

Scale 1/2" = 1'-0"

PLAN	BY	DATE
NOTE BOOK NO.	SURVEYED PLOTTED COMPUTED FIELD CHECKED R/W MAP CHECKED	

PROFILE	BY	DATE
NOTE BOOK NO.	SURVEYED PLOTTED GRADES CHECKED STACKS CHECKED STRUCTURE DATA VERIFIED	

ENGINEER'S SEAL

SURVEY INFORMATION

FIELD NOTES

NO.	BY	DATE

BENCH MARKS

A.C.S. 1 3/4" ALUMINUM DISK, STAMPED "A.C.S. BM. 2-$13 EPOXIED TO TOP OF CONCRETE BASE OF GALV STL POLE #IC-28 AT ANGLE PT. IN THE ELECTRIC TRANSMISSION 248' +/- NORTHERLY OF THE BERNALILLO/ SANDOVAL COUNTY LINE, 78.5' EASTERLY OF ℄ OF RIO RANCHO BLVD (SR 528) ON SW CORNER OF SAID CONC BASE. FIELD ELEV= 5215.872. SEE SHT 5 FOR LOCATION	CONTRACTOR STAKED BY INSPECTOR'S ACCEPTANCE BY FIELD VERIFICATION BY DRAWINGS CORRECTED BY

AS-BUILT INFORMATION

	DATE
CONTRACTOR	
STAKED BY	
INSPECTOR'S ACCEPTANCE BY	
FIELD VERIFICATION BY	
DRAWINGS CORRECTED BY	

MICRO-FILM INFORMATION

	DATE
RECORDED BY	
NO.	

NO.	DATE	REMARKS	BY
		REVISIONS	
		DESIGN	

DESIGNED BY BHI/MAH DATE 1-96
DRAWN BY BHI/MAH DATE 1-96
CHECKED BY BHI/MAH DATE 1-96

BOHANNAN-HUSTON INC.
ENGINEERS • PLANNERS • PHOTOGRAMMETRISTS • SURVEYORS • LANDSCAPE ARCHITECTS
ALBUQUERQUE LAS CRUCES SANTA FE

CITY OF ALBUQUERQUE
PUBLIC WORKS DEPARTMENT
ENGINEERING GROUP

TITLE: WESTSIDE BLVD GUARDRAIL PLAN

3725	A-13-Z	5	32

TRANS:CT9534314.SHEETS.PNP]GUARD-PNP.GRF

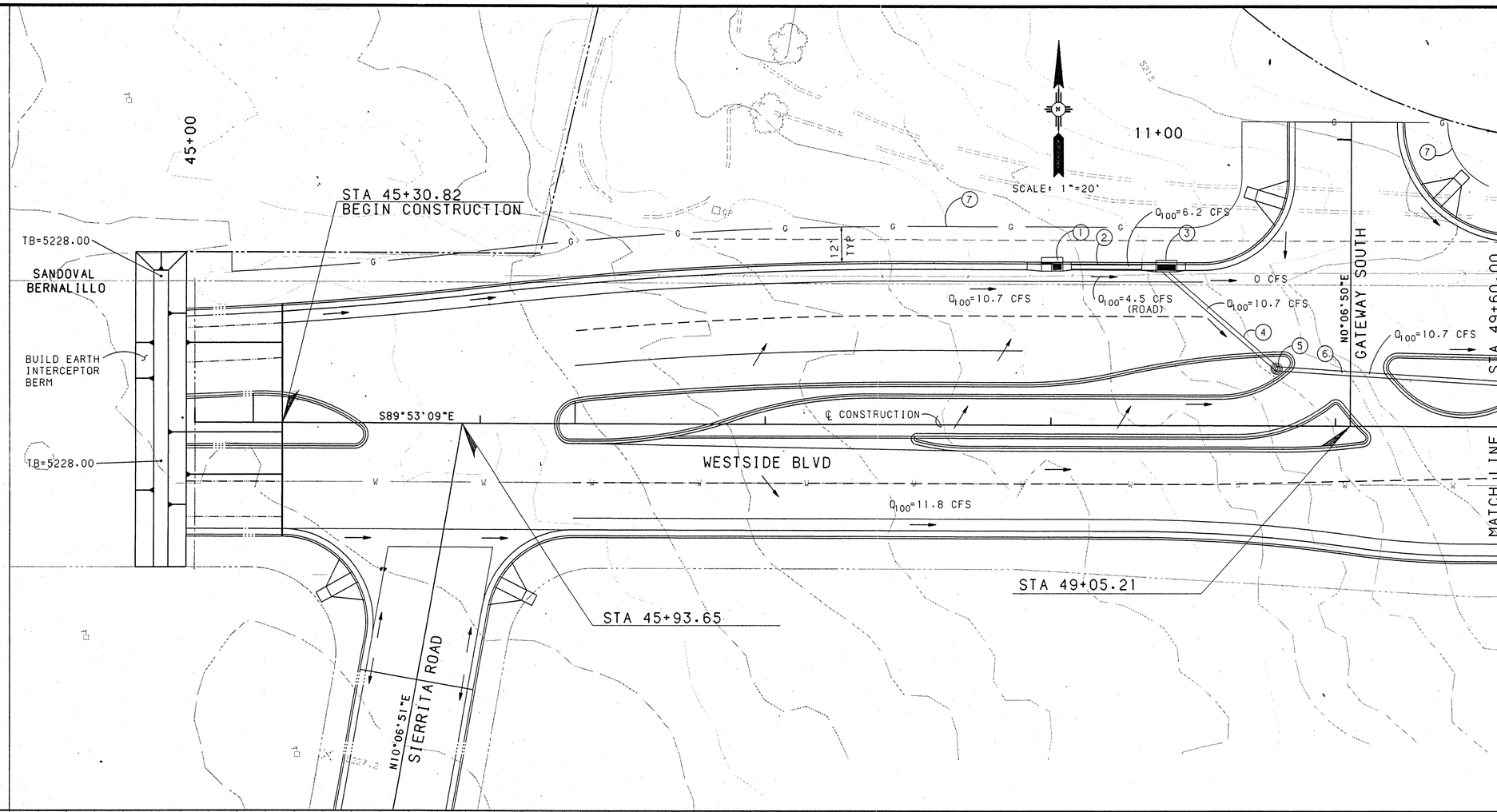

KEY NOTES

1. STA 48+00.00, 56.00' RT
   BUILD 1-SINGLE A CATCH BASIN
   TC=5214.39 INV=5209.39
   COA SD 2201
2. STA 48+00.00, 56.00' RT TO
   STA 48+40.00, 56.00' RT
   BUILD 33.65'-18" RCP CL III
   S = 0.0350 FT/FT
3. STA 48+40.00, 56.00' RT
   BUILD 1-DOUBLE C CATCH BASIN
   TC=5213.57 INV=5208.21
   COA SD 2205
4. STA 48+40.00, 56.00' RT TO
   STA 48+79.00, 20.00' RT
   BUILD 51.65'-24" RCP CL III
   S = 0.0256 FT/FT
5. STA 48+79.00, 20.00' RT
   BUILD 1-4' DIA MH TYPE "C"
   W/ VENTED COVER.
   PROVIDE 2' CURB OPENING IN
   CURB AT COVER. ROTATE COVER
   TOWARD CURB OPENING.
   RIM=5213.04 TC=5213.54
   SHAPE MEDIAN PAVEMENT AROUND
   VENTED COVER. COVER IS 6"
   BELOW MEDIAN PAVEMENT.
   COA SD 2102 & 2110
6. SEE SHEET 7 FOR BUILD NOTES
7. RELOCATED 4" MP GAS LINE
   (NEW LOCATION)

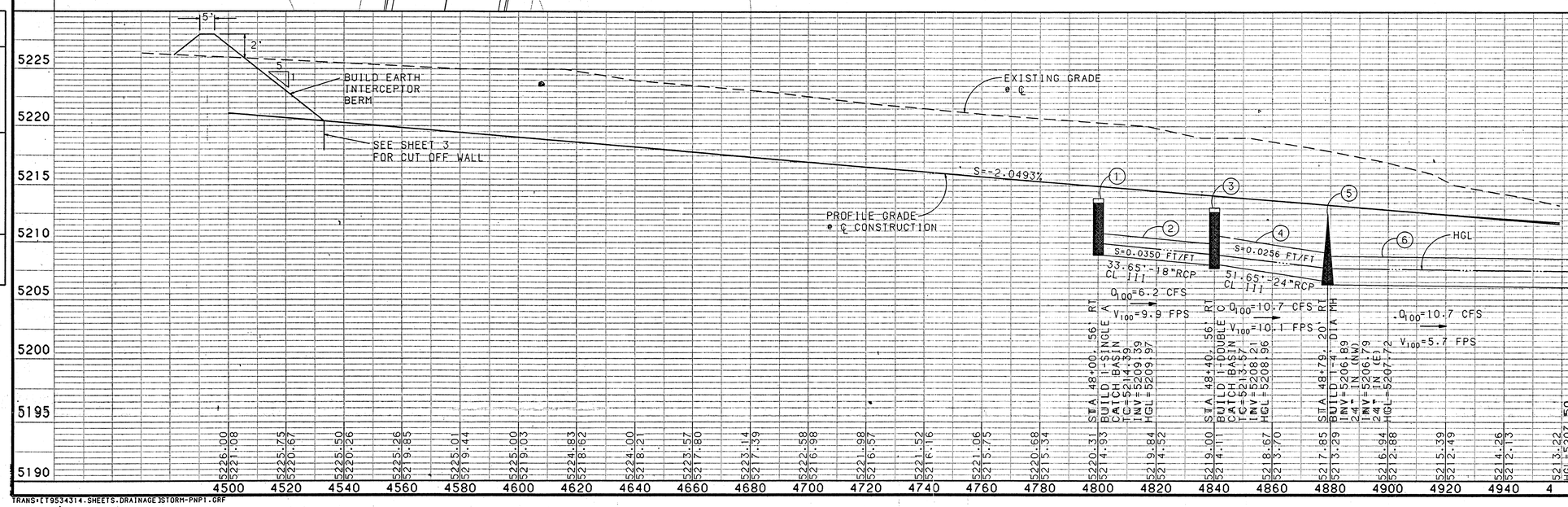

PLAN	DATE	BY
SURVEYED		
PLOTTED		
DRAWN		
REVIEWED		
NOTE BOOK		
NO.		

PROFILE	DATE	BY
SURVEYED		
PLOTTED		
DRAWN		
REVIEWED		
NOTE BOOK		
NO.		

AS-BUILT INFORMATION

	DATE
CONTRACTOR	
WORK STAKED BY	
INSPECTOR'S ACCEPTANCE BY	
FIELD VERIFICATION BY	
DRAWINGS CORRECTED BY	

BENCH MARKS

A.C.S. 1 3/4" ALUMINUM DISK, STAMPED "A.C.S. BM. 2-S13 EPOXIED TO TOP OF CONCRETE BASE OF GALV STL POLE #IC-28 AT ANGLE PT. IN THE ELECTRIC TRANSMISSION 248' +/- NORTHERLY OF THE BERNALILLO/ SANDOVAL COUNTY LINE, 78.5' EASTERLY OF ℄ OF RIO RANCHO BLVD (SR 528) ON SW CORNER OF SAID CONC BASE. FIELD ELEV= 5215.872. SEE SHT 5 FOR LOCATION	

SURVEY INFORMATION

FIELD NOTES

NO.	DATE	BY

ENGINEER'S SEAL

GREG E. GREEN NEW MEXICO 10416 REGISTERED PROFESSIONAL ENGINEER

MICRO-FILM INFORMATION

	DATE
RECORDED BY	
NO.	

NO.	DATE	REMARKS	BY
		REVISIONS	
		DESIGN	

DESIGNED BY BHI/MAH DATE 3-96
DRAWN BY BHI/CJT DATE 3-96
CHECKED BY BHI/MAH DATE 3-96

BOHANNAN-HUSTON INC.
ENGINEERS • PLANNERS • PHOTOGRAMMETRISTS • SURVEYORS • LANDSCAPE ARCHITECTS
ALBUQUERQUE LAS CRUCES SANTA FE

CITY OF ALBUQUERQUE
PUBLIC WORKS DEPARTMENT
ENGINEERING GROUP

TITLE: WESTSIDE BLVD
STA 45+30.00 TO STA 49+60.00
STORM DRAIN PLAN & PROFILE

3750	A-13-Z	6	32

TRANS+CT9534314.SHEETS.DRAINAGE.STORM-PNP1.GRF

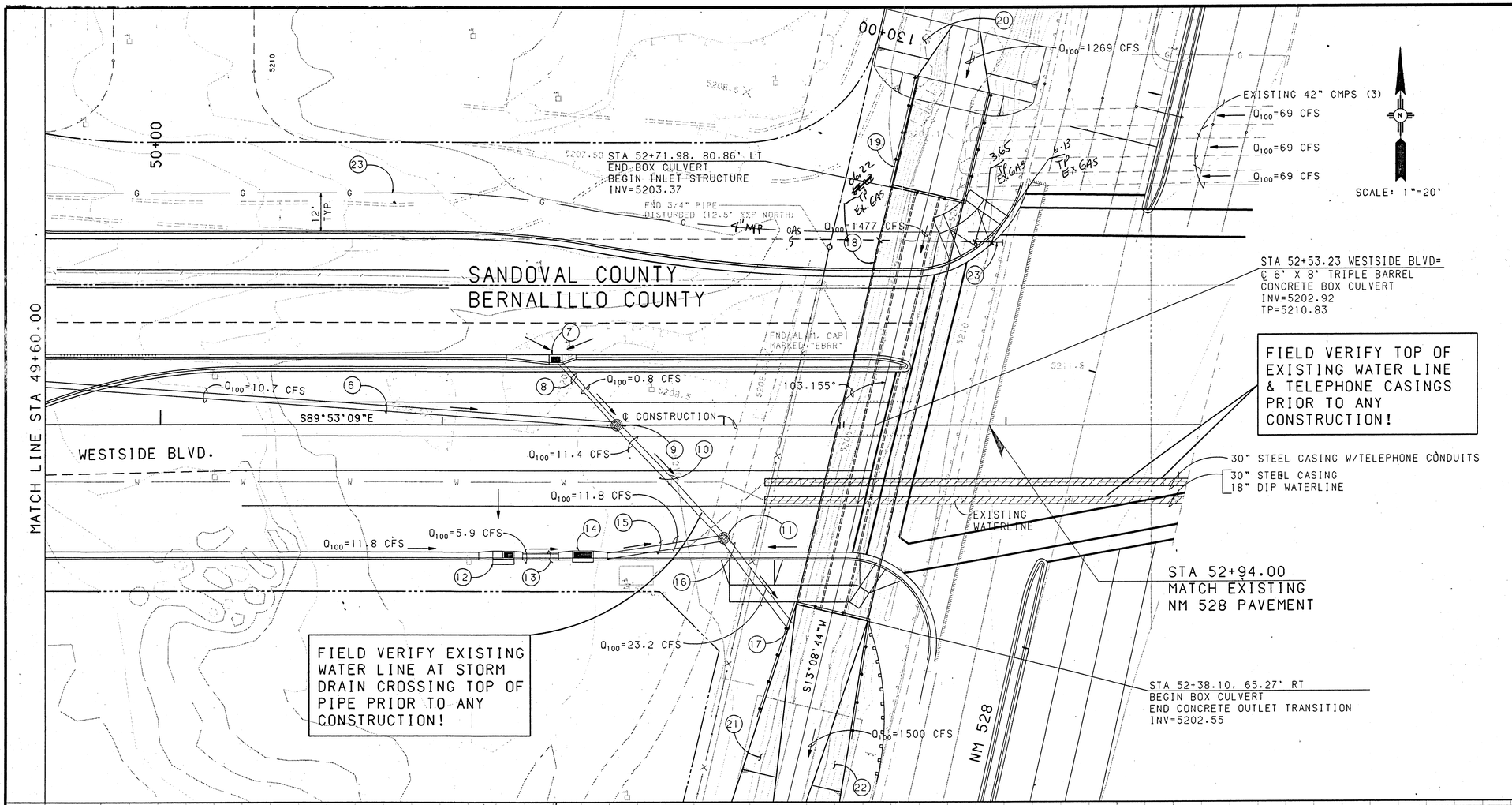

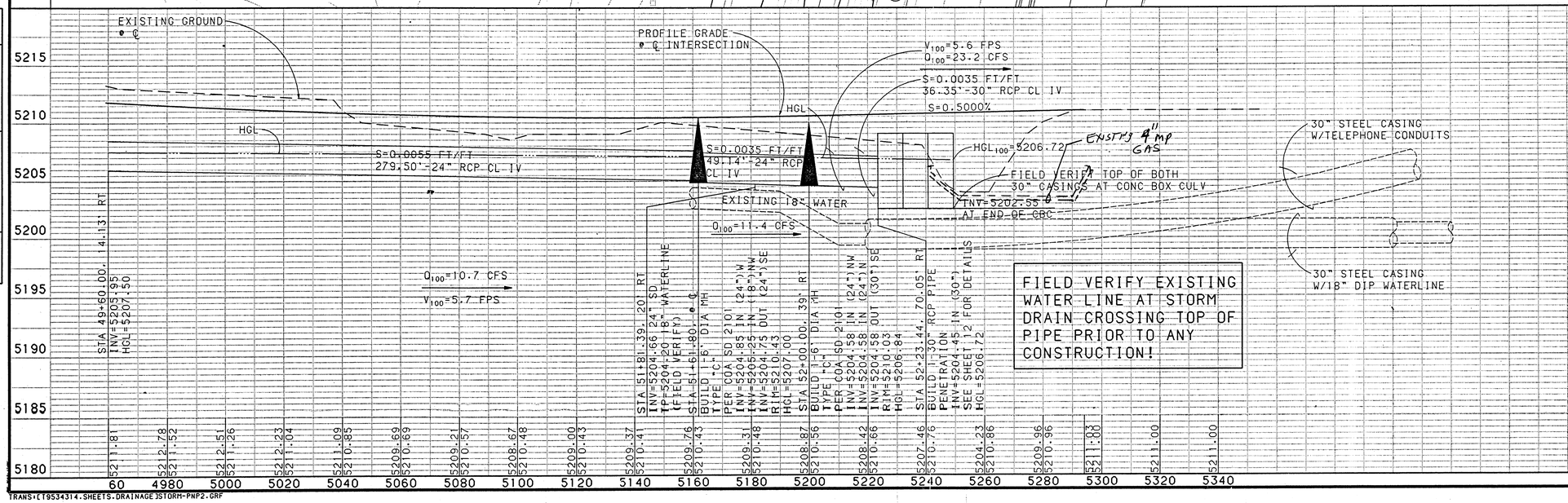

KEYED NOTES

6. STA 48+79.00, 200' LT TO STA 51+61.80, @ CENTERLINE BUILD 279.50'-24" RCP CL IV S=0.0055 FT/FT
7. STA 51+40.00, 24' LT BUILD 1-SINGLE "D" (MOD) CATCH BASIN PER COA SD 2206 TC=5211.08 INV=5205.47
8. STA 51+40.00, 24' LT TO STA 51+61.80, @ CENTERLINE BUILD 29.23'-18" RCP CL IV S=0.0075 FT/FT
9. STA 51+61.80, @ CENTERLINE BUILD 1-6' DIA MH TYPE "C" PER COA SD 2101
10. STA 51+61.80, @ CENTERLINE TO STA 52+00.00, 39' RT BUILD 49.14'-24" RCP CL IV S=0.0035 FT/FT
11. STA 52+00.00, 39' RT BUILD 1-6' DIA MH TYPE "C" PER COA SD 2101
12. STA 51+20.00, 46.00' RT BUILD 1-SGL "A" CATCH BASIN PER COA SD 2201 TC=5210.09 INV=5204.92
13. STA 51+20.00, 46' RT TO STA 51+50.00, 46' RT BUILD 23.64'-18" RCP CL IV S=0.0076 FT/FT
14. STA 51+50.00, 46' RT BUILD 1-DBL "C" CATCH BASIN PER COA SD 2205 TC=5210.08 INV=5204.74
15. STA 51+50.00, 46' RT TO STA 52+00.00, 39' RT BUILD 44.74'-24" RCP CL IV S=0.0036 FT/FT
16. STA 52+00.00, 39' RT TO STA 52+23.44, 70.05' RT BUILD 36.35'-30" RCP CL IV S=0.0036 FT/FT
17. STA 52+23.44, 70.05' RT BUILD 1-30" RCP PIPE PENETRATION THROUGH CBC OUTLET WALL SEE DETAIL SHEETS 11 & 12 INV=5204.45, 70.05' RT
18. STA 52+53.23, @ CENTERLINE BUILD 1-TRIPLE BARREL 8'X6' CONCRETE BOX CULVERT (CBC) X 150', SKEWED 15° LF SEE SHEET 10 FOR STRUCTURE DETAILS. SEE SHEETS 22 & 23 NMSHTD SERIAL CB-33.
19. BUILD 40 LF CONCRETE INLET SEE SHEET 11 FOR DETAILS
20. BUILD 20 LF SHOTCRETE INLET SEE SHEET 11 FOR DETAILS
21. BUILD 85 LF OUTLET PLAN W/ JOINT. SEE SHEET 11 FOR DETAILS
22. REMOVE 51 LF EXISTING CONCRETE CHANNEL. SEE SHEET 11 FOR DETAILS
23. RELOCATED 4" MP GAS LINE (NEW LOCATION BY OTHERS)

SURVEY INFORMATION — FIELD NOTES

NO.	BY	DATE

BENCH MARKS

A.C.S. 1 3/4" ALUMINUM DISK, STAMPED "A.C.S. BM. 2-$13 EPOXIED TO TOP OF CONCRETE BASE OF 6ALV STL POLE #IC-28 AT ANGLE PT. IN THE ELECTRIC TRANSMISSION 248' +/- NORTHERLY OF THE BERNALILLO/ SANDOVAL COUNTY LINE, 78.5' EASTERLY OF ℄ OF RIO RANCHO BLVD (SR 528) ON SW CORNER OF SAID CONC BASE. FIELD ELEV= 5215.872. SEE SHT 5 FOR LOCATION

AS-BUILT INFORMATION

	DATE
CONTRACTOR STAKED BY	DATE
INSPECTOR'S ACCEPTANCE BY	DATE
FIELD VERIFICATION BY	DATE
REVISIONS CORRECTED BY	DATE

MICRO-FILM INFORMATION

	DATE
RECORDED BY	DATE
NO.	

ENGINEER'S SEAL

NO.	DATE	REMARKS	BY
		REVISIONS	
		DESIGN	

DESIGNED BY BHI/MAH DATE 3-96
DRAWN BY BHI/CJT DATE 3-96
CHECKED BY BHI/MAH DATE 3-96

BOHANNAN-HUSTON INC.
ENGINEERS • PLANNERS • PHOTOGRAMMETRISTS • SURVEYORS • LANDSCAPE ARCHITECTS
ALBUQUERQUE LAS CRUCES SANTA FE

CITY OF ALBUQUERQUE
PUBLIC WORKS DEPARTMENT
ENGINEERING GROUP

TITLE: WESTSIDE BLVD
STA 49+60.00 TO STA 52+94.00
STORM DRAIN PLAN & PROFILE

DESIGN REVIEW COMMITTEE	CITY ENGINEER APPROVAL	LAST DESIGN UPDATE	MO./DAY/YR.	MO./DAY/YR.

CITY PROJECT NO.	ZONE MAP NO.	SHEET	OF
3725	A-13-Z	7	32

PLAN — NOTE BOOK NO. ___ — SURVEYED / PLOTTED / PLANS PREPARED / FIELD VERIFY CHECKED / R.O.W. MAP CHECKED

PROFILE — NOTE BOOK NO. ___ — SURVEYED / PLOTTED / PLANS PREPARED / R.O.W. MAP CHECKED / STRUCTURE DATA FILED

TRANS*E[T9534314.SHEETS.DRAINAGE]STORM-PNP2.GRF

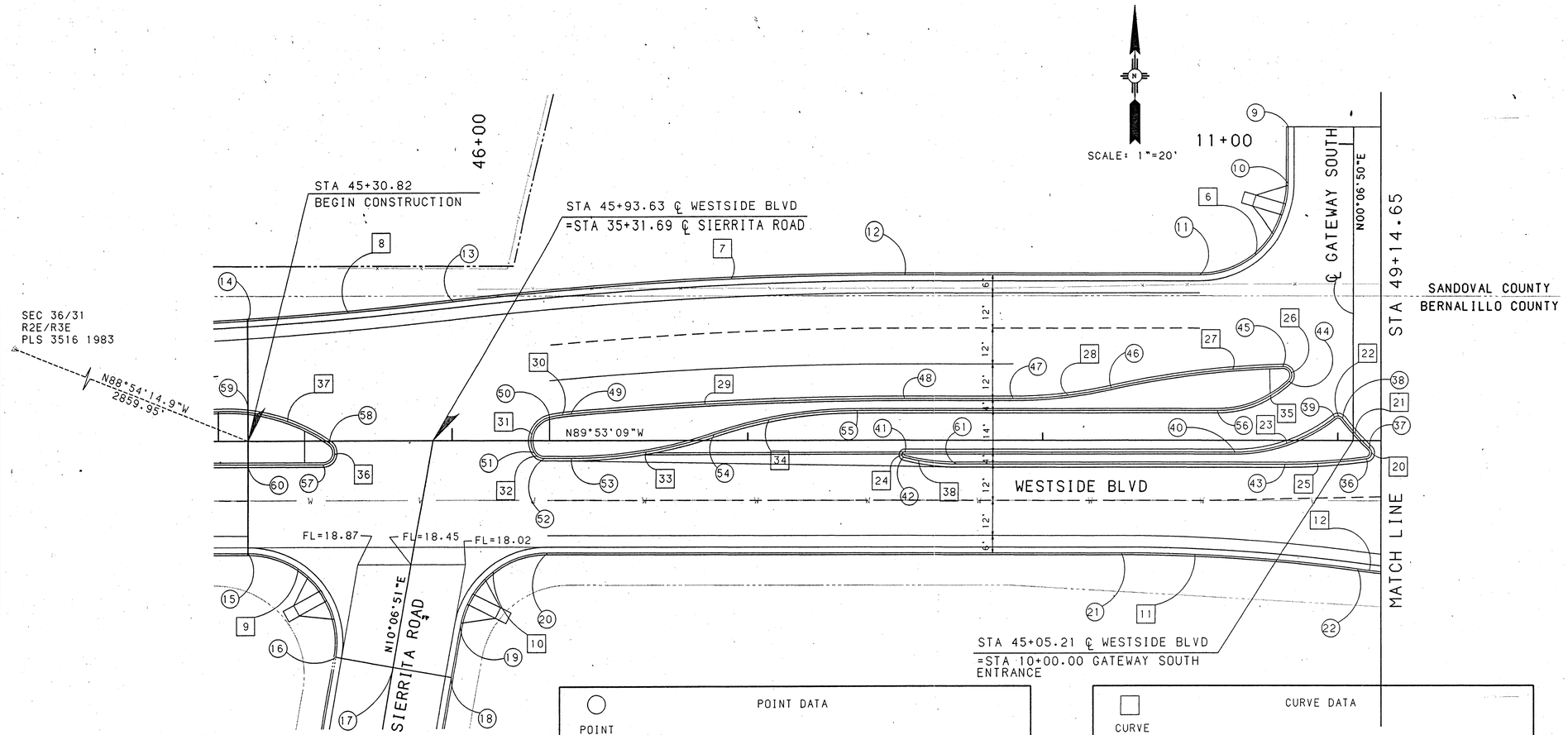

POINT DATA

POINT NO.	STATION	OFFSET	DESCRIPTION	TC ELEVATION
9	48+83.21	106.00' LT	POT	5213.20
10	48+83.21	86.00' LT	PT	5212.80
11	48+53.21	56.00' LT	PC	5212.80
12	47+53.21	56.00' LT	PT	5215.35
13	46+00.51	47.00' LT	PRC	5218.66
14	45+30.82	40.65' LT	PC	5220.23
15	45+30.89	38.00' RT	PC	5220.27
16	45+60.43	73.21' RT	PT	5220.21
17	45+80.13	76.68' RT	POC	•5219.14
18	45+99.83	80.16' RT	POT	5219.41
19	46+02.89	62.79' RT	PC	5218.19
20	46+32.43	38.00' RT	PT	5217.65
21	48+26.96	38.00' RT	PC	5214.61
22	49+06.78	43.33' RT	PRC	-
36	49+09.72	6.10' RT	PCC	5213.07
37	49+10.81	2.65' RT	PRC	5213.12
38	49+01.67	7.40' LT	PRC	5213.20
39	48+98.84	7.75' LT	PRC	5213.25
40	48+65.21	4.00' RT	PC	5214.15
41	47+53.21	4.00' RT	PT	5216.47
42	47+53.21	8.00' RT	PT	5216.23
43	48+82.18	8.00' RT	PC	5213.59
44	48+83.65	19.94' LT	PCC	5213.32
45	48+81.47	25.09' LT	PCC	5213.26
46	48+23.33	17.73' LT	PRC	5214.60
47	47+90.06	14.00' LT	PC	5215.35
48	47+53.21	14.00' LT	PT	5216.11
49	46+40.22	8.92' LT	PCC	5218.53
50	46+33.02	7.82' LT	PCC	5218.69
51	46+27.77	4.00' RT	PCC	5218.88
52	46+31.23	6.00' RT	PT	5218.77
53	46+40.39	6.00' RT	PC	5218.58
54	46+88.72	2.00' LT	PRC	5217.67
55	47+37.05	10.00' LT	PT	5216.52
56	48+59.21	10.00' LT	PC	5214.02
57	45+55.98	8.00' RT	PC	5220.27
58	45+58.27	0.72' RT	PCC	5220.37
59	45+30.82	9.69' LT	POC	5220.76
60	45+30.82	8.00' RT	POT	5520.79
61	47+71.23	8.00' RT	PCC	

•TOP OF PAVEMENT ELEVATION

CURVE DATA

CURVE NO.	DELTA	TANGENT	LENGTH	RADIUS
6	90° 0' 1.1"	30.01'	47.13'	30.01'
7	6°44'45.2"	76.62'	153.06'	1300.00'
8	3° 5' 4.2"	35.01'	69.99'	1300.00'
9	100° 0' 0.2"	35.76'	52.36'	30.01'
10	79°59'59.8"	25.18'	41.89'	30.00'
11	7°38'42.9"	40.09'	30.06'	600.00'
12	7°45'33.9"	20.35'	40.63'	300.00'
20	129°13'59.7"	4.22'	4.52'	2.01'
21	9°44' 3.8"	6.82'	13.60'	80.00'
22	91° 5'53.0"	2.04'	3.18'	2.01'
23	38°30'39.3"	18.87'	36.30'	54.00'
24	151°38'49.3"	3.57'	2.39'	1.00'
25	7°54'50.3"	13.84'	27.63'	200.01'
26	137°19'31.4"	7.68'	7.20'	3.00'
27	11°12'38.1"	29.45'	58.70'	300.00'
28	12°48'45.4"	16.85'	33.55'	150.00'
29	5° 9'11.6"	56.62'	113.15'	1258.00'
30	6°57'40.6"	3.65'	7.29'	60.00'
31	107°53'10.5"	10.99'	15.07'	8.01'
32	59°59'59.1"	2.31'	4.19'	4.01'
33	18°47'49.5"	24.83'	49.22'	150.00'
34	18°47'49.5"	24.83'	49.22'	150.00'
35	44° 6'33.8"	14.18'	26.95'	35.01'
36	145° 4'27.0"	12.72'	10.13'	4.00'
37	28°19'31.4"	15.15'	29.67'	60.00'
38	14°13'53.1"	9.36'	18.63'	75.00'

AS-BUILT INFORMATION

CONTRACTOR	DATE
WORK STAKED BY	DATE
INSPECTOR'S ACCEPTANCE BY	DATE
FIELD VERIFICATION BY	DATE
DRAWINGS CORRECTED BY	DATE

MICRO-FILM INFORMATION

RECORDED BY	DATE
NO.	

BENCH MARKS

A.C.S. 1 3/4" ALUMINUM DISK: STAMPED "A.C.S. BM. 2-S13 EPOXIED TO TOP OF CONCRETE BASE OF GALV STL POLE #IC-28, AT ANGLE PT. IN THE ELECTRIC TRANSMISSION 248' +/- NORTHERLY OF THE BERNALILLO/ SANDOVAL COUNTY LINE. 78.5' EASTERLY OF ℄ OF RIO RANCHO BLVD (SR 528) ON SW CORNER OF SAID CONC BASE. FIELD ELEV= 5215.872. SEE SHT 5 FOR LOCATION

SURVEY INFORMATION

FIELD NOTES

NO.	BY	DATE

ENGINEER'S SEAL

REVISIONS

NO.	DATE	REMARKS	BY

DESIGN

DESIGNED BY BHI/MAH DATE 3-96
DRAWN BY BHI/CJT DATE 3-96
CHECKED BY BHI/MAH DATE 3-96

BOHANNAN-HUSTON INC.
ENGINEERS • PLANNERS • PHOTOGRAMMETRISTS • SURVEYORS • LANDSCAPE ARCHITECTS
ALBUQUERQUE LAS CRUCES SANTA FE

CITY OF ALBUQUERQUE
PUBLIC WORKS DEPARTMENT
ENGINEERING GROUP

TITLE: WESTSIDE BLVD
STA 45+30.00 TO STA 49+60.00
GEOMETRY LAYOUT

3725 | A-13-Z | 8 | 32

TRANS+CT9534314.SHEETS.INTERJINTER-WEST1.GRF

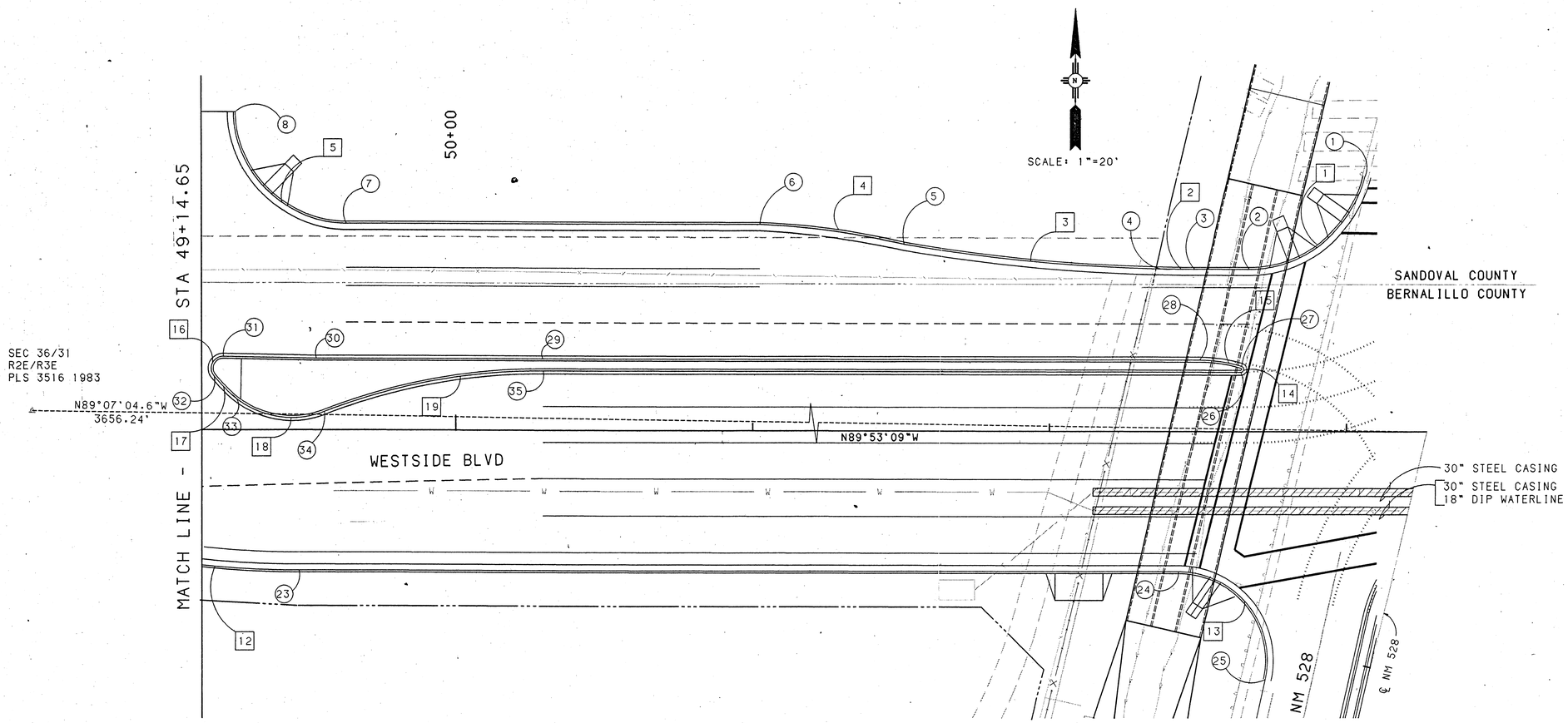

POINT DATA

POINT NO.	STATION	OFFSET	DESCRIPTION	TC ELEVATION
1	53+05.93	84.63' LT	PT	MATCH EXISTING
2	52+67.05	54.00' LT	PC	5211.80
3	52+48.69	54.00' LT	POT	5211.70
4	52+40.73	54.05' LT	PT	5211.66
5	51+51.04	62.00' LT	PRC	5211.38
6	51+02.25	68.00' LT	PC	5211.48
7	49+63.21	68.00' LT	PT	5212.35
8	49+25.21	106.00' LT	PC	5213.57
23	49+47.29	46.00' RT	PT	5211.67
24	52+43.50	46.00' RT	PC	5210.98
25	52+72.80	82.42' RT	PT	MATCH EXISTING
26	52+64.21	20.00' LT	PC	5211.51
27	52+64.49	21.96' LT	PCC	5211.52
28	52+50.35	24.00' LT	PC	5211.46
29	50+29.21	24.00' LT	POT	5211.60
30	49+53.21	24.00' LT	POT	5212.40
31	49+21.88	24.62' LT	PT	5212.82
32	49+18.70	18.10' LT	PCC	5212.91
33	49+24.48	11.94' LT	PCC	5212.85
34	49+55.85	6.06' LT	PRC	5212.37
35	50+29.21	20.00' LT	PT	5211.58

CURVE DATA

CURVE NO.	DELTA	TANGENT	LENGTH	RADIUS
1	76°26'47.8"	31.51'	53.37'	40.00'
2	0°45'37.8"	3.99'	7.97'	600.00'
3	8°36'22.6"	45.15'	90.13'	600.00'
4	9°21'56.0"	24.68'	49.25'	301.27'
5	89°59'58.8"	38.00'	59.69'	38.00'
12	7°45'33.9"	20.35'	40.63'	300.00'
13	102°21'46.5"	37.29'	53.60'	30.01'
14	163°34'24.9"	6.93'	2.86'	1.01'
15	16°25'35.1"	7.22'	14.34'	50.00'
16	130°19'16.0"	8.65'	9.10'	4.01'
17	8° 4'19.1"	4.24'	8.46'	60.00'
18	64°16'10.1"	18.85'	33.66'	30.00'
19	21°31' 0.6"	38.01'	75.11'	200.00'

AS-BUILT INFORMATION

		DATE
CONTRACTOR		
STAKED BY		DATE
INSPECTOR'S ACCEPTANCE BY		DATE
FIELD VERIFICATION BY		DATE
REVISED BY		
CORRECTED BY		DATE

MICRO-FILM INFORMATION

		DATE
RECORDED BY		DATE
NO.		

BENCH MARKS

A.C.S. 1 3/4" ALUMINUM DISK. STAMPED	
"A.C.S. BM. 2-$13 EPOXIED TO TOP OF CONCRETE BASE OF GALV STL POLE #IC-28 AT ANGLE PT. IN THE ELECTRIC TRANSMISSION 248' +/- NORTHERLY OF THE BERNALILLO/ SANDOVAL COUNTY LINE. 78.5' EASTERLY OF ℄ OF RIO RANCHO BLVD (SR 528) ON SW CORNER OF SAID CONC BASE. FIELD ELEV= 5215.872. SEE SHT 5 FOR LOCATION	

SURVEY INFORMATION

FIELD NOTES

NO.	BY	DATE

ENGINEER'S SEAL

STATE OF NEW MEXICO — JAMES C. HUSTON — 10151 — REGISTERED PROFESSIONAL ENGINEER

NO.	DATE	REMARKS	BY
		REVISIONS	

DESIGN

DESIGNED BY BHI/MAH		DATE 3-96
DRAWN BY BHI/CJT		DATE 3-96
CHECKED BY BHI/COA		DATE 3-96

BOHANNAN-HUSTON INC.
ENGINEERS • PLANNERS • PHOTOGRAMMETRISTS • SURVEYORS • LANDSCAPE ARCHITECTS
ALBUQUERQUE LAS CRUCES SANTA FE

CITY OF ALBUQUERQUE
PUBLIC WORKS DEPARTMENT
ENGINEERING GROUP

TITLE: WESTSIDE BLVD/NM 528
STA 49+60.00 TO STA 52+94.00
GEOMETRY LAYOUT

3725 | A-13-Z | 9 | 32

TRANS+CT9534314.SHEETS.INTERINTER-WEST2.GRF

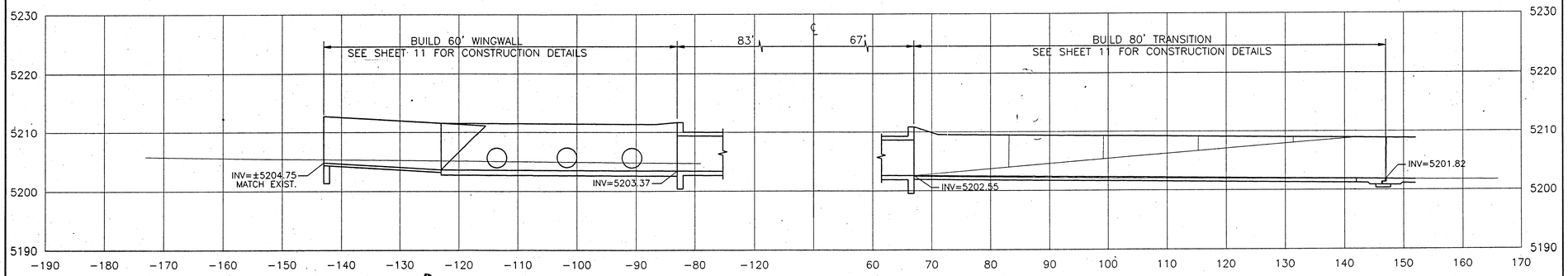

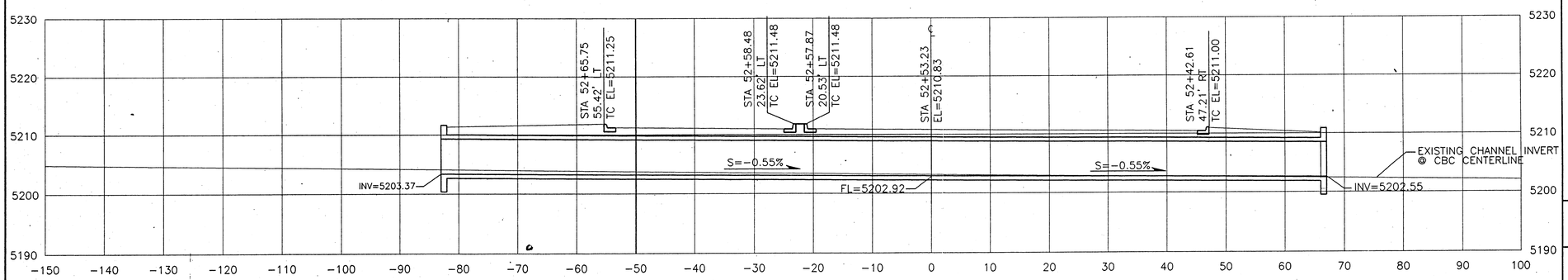

STA 52+53.23

BUILD 3 – 8'x6'x150' CBC'S ~ 13° SK LF
W/WINGWALLS LT & RT, DESIGN I
SERIALS: CB-33

BENCH MARKS
A.C.S. 1 3/4" ALUMINUM DISK, STAMPED "A.C.S. BM. 2-$13 EPOXIED TO TOP OF CONCRETE BASE OF GALV STL POLE #IC-28 AT ANGLE PT. IN THE ELECTRIC TRANSMISSION 248' +/- NORTHERLY OF THE BERNAILLO/ SANDOVAL COUNTY LINE, 78.5' EASTERLY OF ℄ OF RIO RANCHO BLVD (SR 528) ON SW CORNER OF SAID CONC. BASE. FIELD ELEV= 5215.672. SEE SHT. 5 FOR LOCATION

SURVEY INFORMATION FIELD NOTES		
NO.	BY	DATE

AS-BUILT INFORMATION	
CONTRACTOR	DATE
WORK STAKED BY	DATE
INSPECTOR'S ACCEPTANCE BY	DATE
FIELD VERIFICATION BY	DATE
DRAWINGS CORRECTED BY	DATE
MICRO-FILM INFORMATION	
RECORDED BY	DATE
NO.	

ENGINEER'S SEAL

NO.	DATE	REMARKS	BY
		REVISIONS	
		DESIGN	

DESIGNED BY	BHI	DATE 1-95
DRAWN BY	BHI/AKG	DATE 1-95
CHECKED BY	BHI	DATE 1-95

BOHANNAN-HUSTON INC.
ENGINEERS • PLANNERS • PHOTOGRAMMETRISTS • SURVEYORS • LANDSCAPE • ARCHITECTS
ALBUQUERQUE LAS CRUCES SANTA FE

CITY OF ALBUQUERQUE
PUBLIC WORKS DEPARTMENT
ENGINEERING DEVELOPMENT GROUP

TITLE: WESTSIDE BLVD
CBC STRUCTURE SECTION

DESIGN REVIEW COMMITTEE	CITY ENGINEER APPROVAL	LAST DESIGN UPDATE	MO./DAY/YR.	MO./DAY/YR.

CITY PROJECT NO.	ZONE MAP NO.	SHEET
3725	A-13-Z	10 OF 32

TRANS:[T9534314.ACAD]STRSEC.DWG 8/19/96

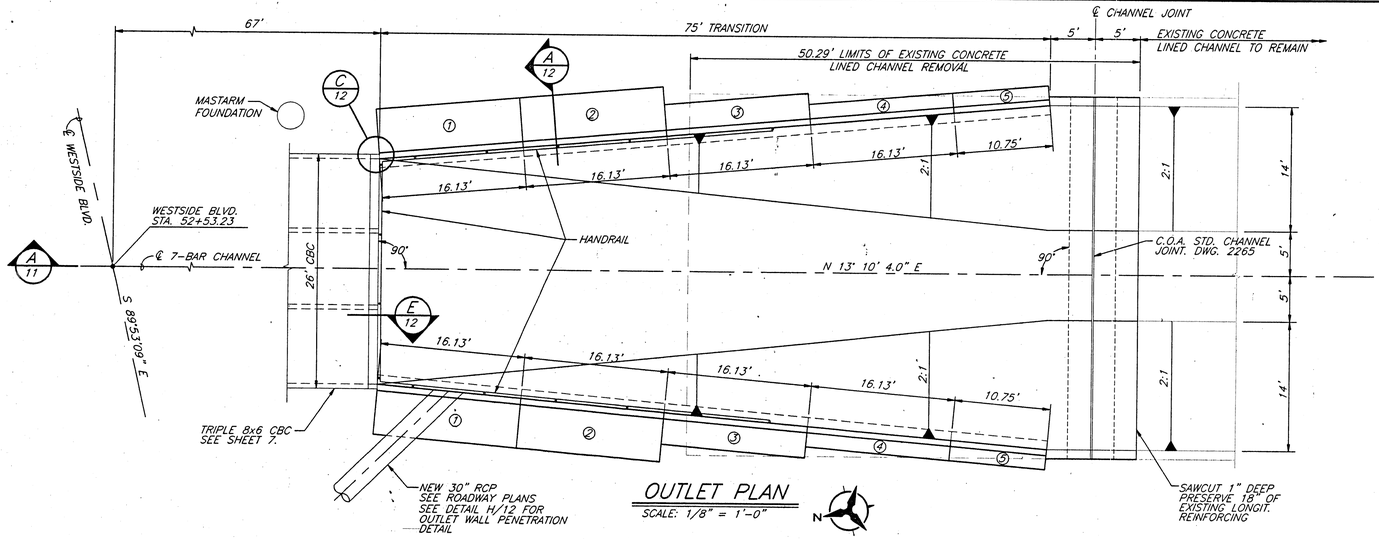

OUTLET PLAN

SCALE: 1/8" = 1'-0"

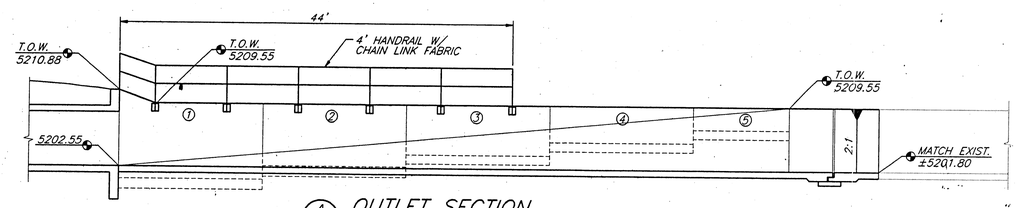

OUTLET SECTION

SCALE: 1/8" = 1'-0"

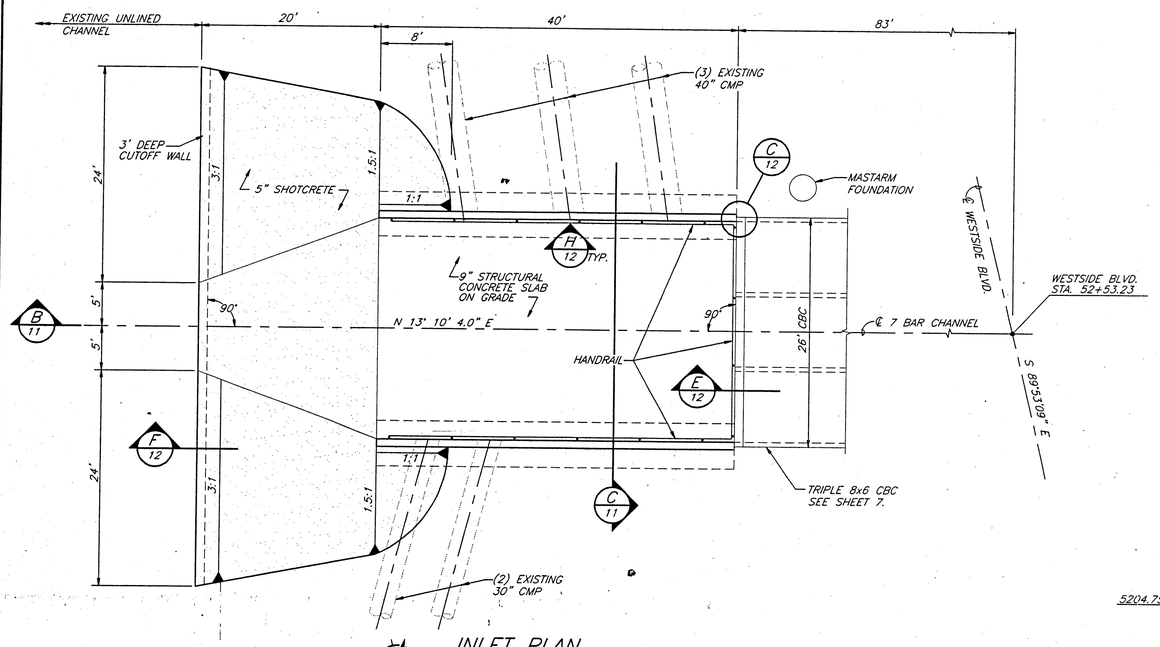

INLET PLAN

SCALE: 1/8" = 1'-0"

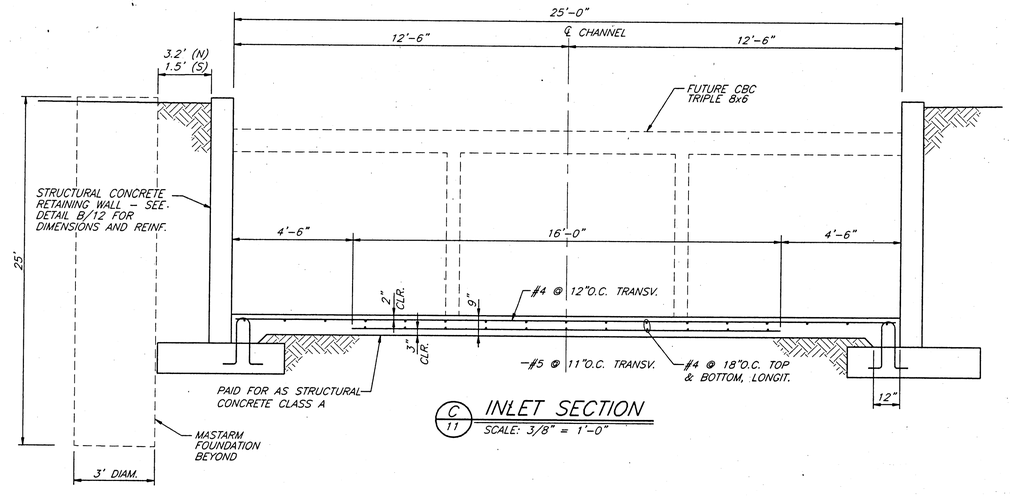

INLET SECTION

SCALE: 3/8" = 1'-0"

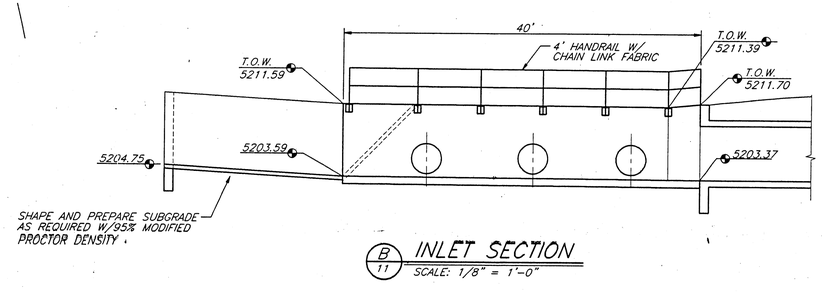

INLET SECTION

SCALE: 1/8" = 1'-0"

DESIGN DATA

Live Load: 2' surcharge
Equivolent Fluid Earth Pressure:
Active = 35 pcf; Passive = 320 pcf.
Soil Weight: 110 pcf
Allowable soil pressure = 2000 psf
Sliding coefficient of friction = 0.40

GENERAL NOTES

1 This work shall be in accordance with the New Mexico Standard Specifications for Highway and Bridge Construction, 1994 Edition and applicable supplemental special provisions.
2 Concrete for retaining walls shall be Structural Concrete Class A, 4000 psi. with type F fly ash. Type F fly ash will be used at a rate of 4:1 (cement:FA). All concrete shall receive a Class 1, Ordinary Surface Finish.
3 Reinforcing bars shall be grade 60 unless noted otherwise. Dimensions refer to the centerline of the bar.
4 The contractor shall be responsible to locate in the field all existing utilities prior to begining work. The contractor shall provide safe and adequate shoring of all utilities and structure during construction.
5 The quantity for reinforcing bars is estimated based on the volume of Concrete. Final payment will be made on the pounds of reinforcement in place.
6 Anchor bolts, nuts and washers shall be ASTM A307, galvanized.
7 Removal of portions of the existing concrete channel lining is required. Removal and disposal of all necessary items are paid for under item 601000. Removals include approx. 40 l.f. of 5' deep concrete cutoff wall, approx. 15 l.f. of riprap, type L, 3' thick in bottom, 18" thick on slopes (± 43 cy.) and approx. 230 sy. of 8" conc. slope paving.

QUANTITIES

Item No.	Description	Unit	Quantity
203000	Unclassified Excavation	CY	1,425
203100	Borrow	CY	–
511000	Structural Concrete Class A	CY	128.5
540060	Reinforcing Bars Grade 60	LBS	22,975
601000	Removal of Structures and Obstr	LS	1
XXXXXX	8" Concrete Channel Lining	SY	325.0
XXXXXX	Channel Joint	LF	37.25
XXXXXX	5" Shotcrete	SY	143.6
XXXXXX	4' Chain Link Fence	LF	228.0

AS-BUILT INFORMATION

CONTRACTOR — DATE
WORK STAKED BY ℄ — DATE
MONITORING & MEASUREMENTS BY — DATE
FIELD VERIFICATION BY — DATE
CORRECTED BY — DATE

BENCH MARKS

A.C.S. 1 3/4" ALUMINUM DISK, STAMPED "A.C.S. BM. 2-$13 EPOXIED TO TOP OF CONCRETE BASE OF GALV STL POLE #IC-28 AT ANGLE PT. IN THE ELECTRIC TRANSMISSION 248' +/- NORTHERLY OF THE BERNALILLO/ SANDOVAL COUNTY LINE, 78.5' EASTERLY OF ℄ OF RIO RANCHO BLVD (SR 528) ON SW CORNER OF SAID CONC BASE. FIELD ELEV= 5215.872. SEE SHT 5 FOR LOCATION

MICRO-FILM INFORMATION

RECORDED BY — DATE
NO.

SURVEY INFORMATION

FIELD NOTES

NO.	BY	DATE

ENGINEER'S SEAL

REGISTERED PROFESSIONAL ENGINEER 10015 — 8-22-96

NO.	DATE	REMARKS	BY
		REVISIONS	
		DESIGN	

DESIGNED BY DMB — DATE 5-96
DRAWN BY AAG — DATE 5-96
CHECKED BY GEL — DATE 5-96

BOHANNAN-HUSTON INC.
ENGINEERS • PLANNERS • PHOTOGRAMMETRISTS • SURVEYORS • LANDSCAPE • ARCHITECTS
ALBUQUERQUE LAS CRUCES SANTA FE

CITY OF ALBUQUERQUE
PUBLIC WORKS DEPARTMENT
ENGINEERING DEVELOPMENT GROUP

TITLE: WESTSIDE BLVD.
CBC INLET/OUTLET TRANSITION PLANS & SECTIONS

DESIGN REVIEW COMMITTEE	CITY ENGINEER APPROVAL	LAST DESIGN UPDATE	MO./DAY/YR.	MO./DAY/YR.
			6/20/96	

CITY PROJECT NO.	ZONE MAP NO.	SHEET	OF
3725	A-13-Z	11	32

TRANS:[T95343A32222.ACAD]CBCPNP.DWG 8/19/96

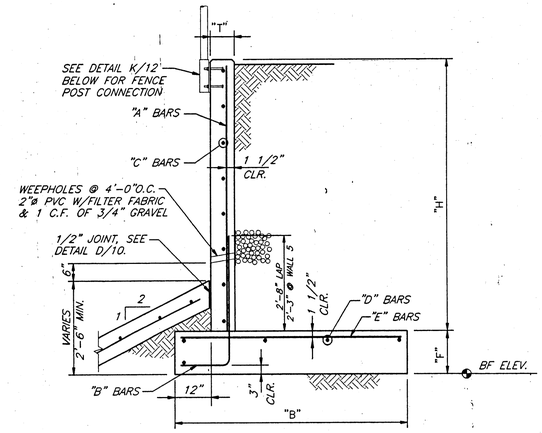

OUTLET WALL TABLE						
		WALL				
		1	2	3	4	5
DIMENSIONS	T	8"	8"	8"	8"	8"
	H	8'-4"	6'-10"	5'-6"	4'-0"	2'-6"
	F	14"	14"	12"	12"	12"
	B	6'-6"	6'-6"	4'-6"	3'-3"	3'-3"
BARS	A	#5 @ 18"	#5 @ 18"	#4 @ 18"	N/A	N/A
	B	#6 @ 9"	#6 @ 9"	#4 @ 9"	#4 @ 18"	#4 @ 18"
	C	#4 @ 12"	#4 @ 12"	#4 @ 12"	#4 @ 12"	#4 @ 12"
	D	(5) #6	(5) #6	(4) #5	(5) #4	(5) #4
	E	#6 @ 18"	#6 @ 18"	#5 @ 18"	#4 @ 18"	#4 @ 18"
ELEV.	BF	5200.05	5201.55	5203.05	5204.55	5206.05

A/12 OUTLET WALL DETAIL
SCALE: 1/2" = 1'-0"

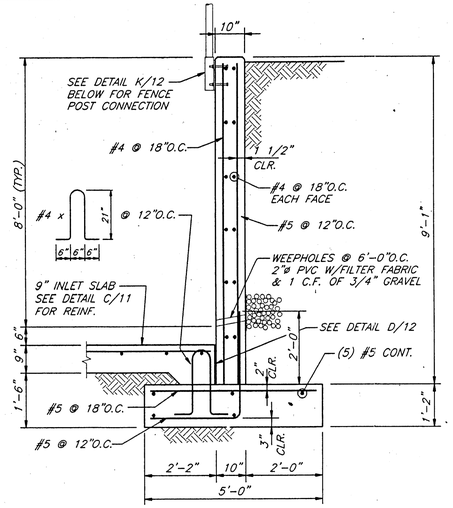

B/12 INLET WALL DETAIL
SCALE: 1/2" = 1'-0"

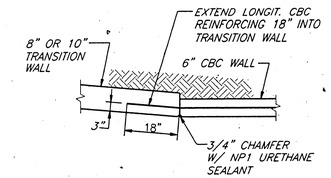

C/12 CBC TO TRANSITION WALL JOINT DETAIL
SCALE: 1/2" = 1'-0"

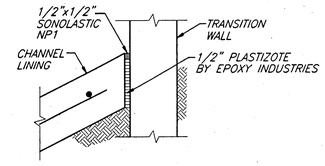

D/12 CHANNEL LINING/WALL JOINT DETAIL
SCALE: 1" = 1'-0"

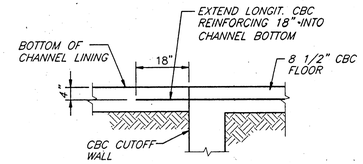

E/12 CBC TO CHANNEL LINING JOINT DETAIL
SCALE: 1/2" = 1'-0"

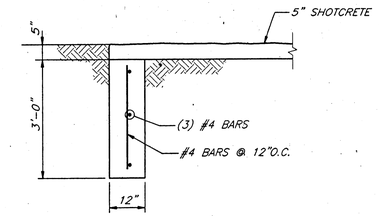

F/12 CUTOFF WALL DETAIL
SCALE: 1/2" = 1'-0"

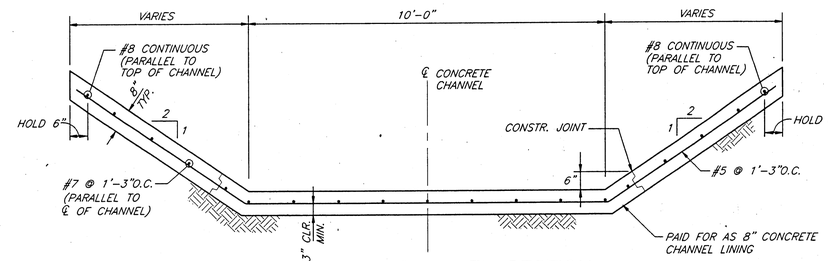

TYPICAL CHANNEL SECTION AT OUTLET TRANSITION
SCALE: 1/2" = 1'-0"

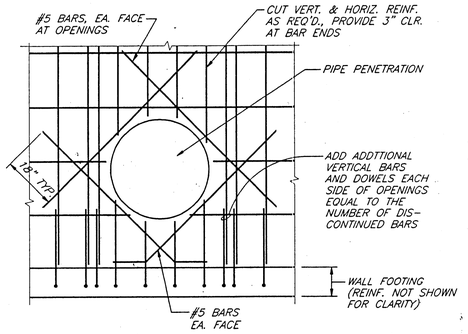

H/12 REINFORCING DETAIL @ PIPE PENETRATION
NO SCALE

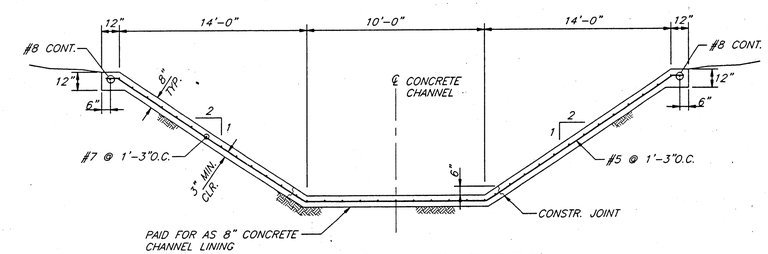

TYPICAL CHANNEL SECTION
SCALE: 1/4" = 1'-0"

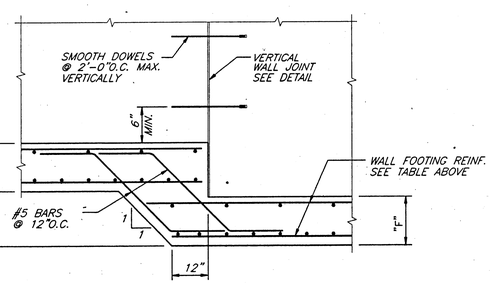

J/12 OUTLET WALL STEPPED FOOTING DETAIL
SCALE: 1/2" = 1'-0"

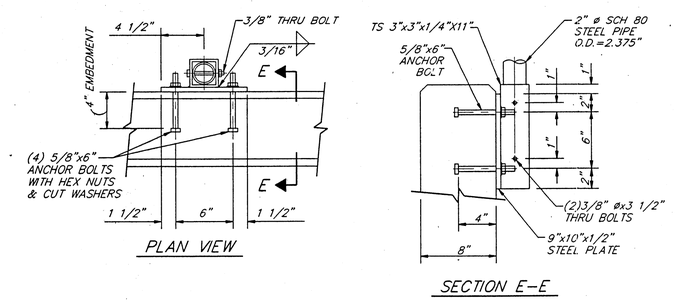

K/12 FENCE POST CONNECTOR DETAIL
NO SCALE

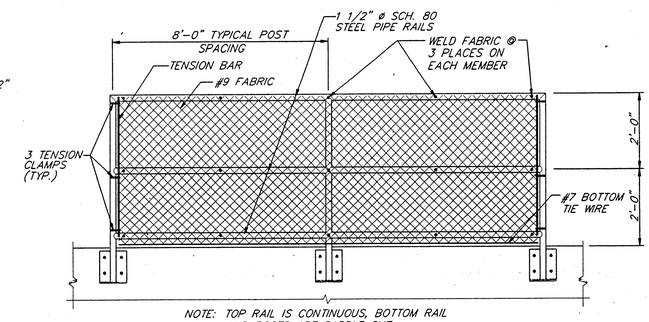

NOTE: TOP RAIL IS CONTINUOUS, BOTTOM RAIL AND POSTS ARE SADDLE CUT.

TYPICAL FENCE DETAIL
NO SCALE

FENCE NOTES
1. 4' CHAIN LINK FENCE SHALL BE CONSTRUCTED IN ACCORDANCE WITH C.O.A. STANDARD DRAWING 2252.
2. ALL POST, RAILS, PLATES, ANGLES, BOLTS, ETC. SHALL BE OF STRUCTURAL STEEL AND GALVANIZED PER C.O.A. STANDARDS.
3. INSTALL CHAIN LINK FENCE ON OUTSIDE OF PIPE RAIL.
4. TENSION WIRE SHALL BE 7 GA. SPRING STEEL WITH 11 GA. WIRE TIES @ ±24" O.C.
5. TENSION BARS AND THREE (3) CLAMPS AT EACH END POST.
6. TACK WELD CHAIN LINK FABRIC @ THREE (3) POINTS ALONG EACH FRAME MEMBER.
7. PAINT ALL FIELD WELDS WITH GALVANIZING COATING.
8. FINAL TOP COAT PAINT ON POSTS,RAILS,PLATES,& ANGLES SHALL BE TURQUOISE COLOR.

AS-BUILT INFORMATION

CONTRACTOR	DATE
STAKED BY	DATE
INSPECTOR'S ACCEPTANCE BY	DATE
FIELD VERIFICATION BY	DATE
DRAWING CORRECTED BY	DATE

MICRO-FILM INFORMATION

RECORDED BY	DATE
NO.	

BENCH MARKS

A.C.S. 1 3/4" ALUMINUM DISK, STAMPED "A.C.S. BM. 2-$13 EPOXIED TO TOP OF CONCRETE BASE OF GALV STL POLE #IC-28 AT ANGLE PT. IN THE ELECTRIC TRANSMISSION 248' +/- NORTHERLY OF THE BERNALILLO/SANDOVAL COUNTY LINE, 78.5' EASTERLY OF ℄ OF RIO RANCHO BLVD. (SR. 528) ON SW CORNER OF SAID CONC BASE. FIELD ELEV= 5215.872. SEE SHT 5 FOR LOCATION

SURVEY INFORMATION

FIELD NOTES

NO.	BY	DATE

ENGINEER'S SEAL

NO.	DATE	REMARKS	BY
		REVISIONS	
		DESIGN	

DESIGNED BY DMB DATE 5-96
DRAWN BY AAG DATE 5-96
CHECKED BY GEL DATE 5-96

BOHANNAN-HUSTON INC.
ENGINEERS • PLANNERS • PHOTOGRAMMETRISTS • SURVEYORS • LANDSCAPE • ARCHITECTS
ALBUQUERQUE LAS CRUCES SANTA FE

CITY OF ALBUQUERQUE
PUBLIC WORKS DEPARTMENT
ENGINEERING DEVELOPMENT GROUP

TITLE: WESTSIDE BLVD.
CBC INLET/OUTLET TRANSITION DETAILS

DESIGN REVIEW COMMITTEE	CITY ENGINEER APPROVAL	LAST DESIGN UPDATE	MO./DAY/YR.	MO./DAY/YR.
			6/20/96	

CITY PROJECT NO.	ZONE MAP NO.	SHEET	OF
3725	A-13-Z	12	32

TRANS:[T95343A32222.ACAD]CBCDTL.DWG 8/19/96

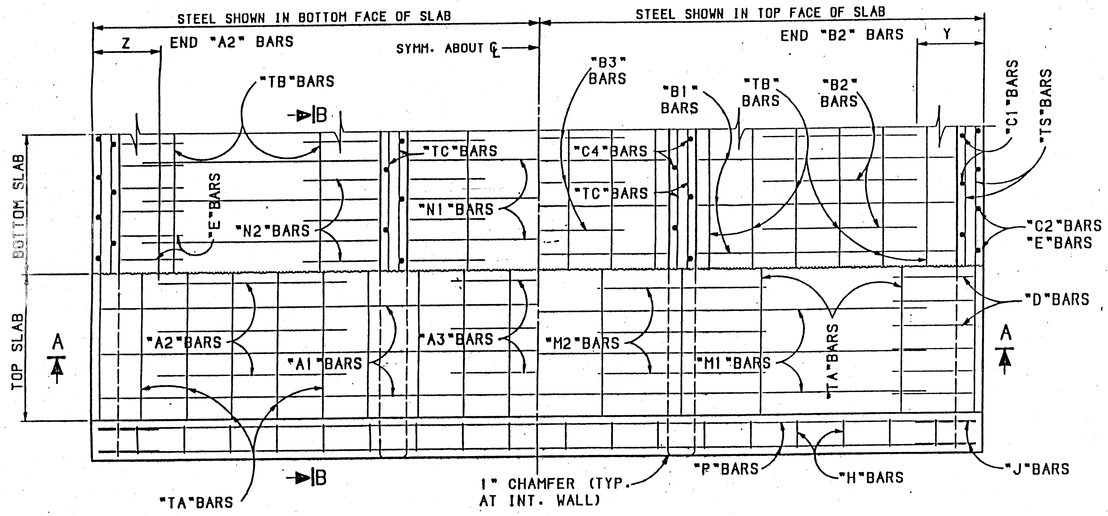

PART PLAN AND PART SECTION C-C

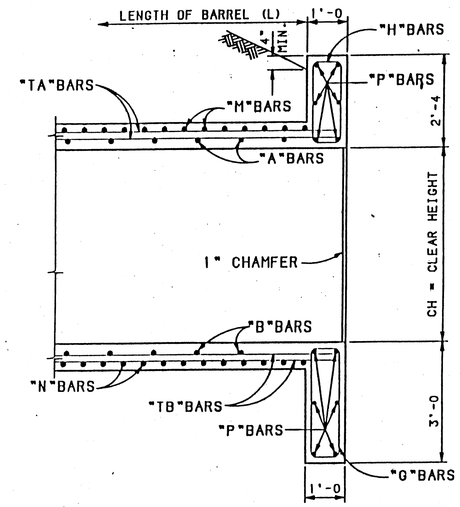

PART SECTION B-B

GENERAL NOTES

1. ALL CONCRETE SHALL BE CLASS "A". CHAMFER ALL THE EXPOSED EDGES 3/4".
2. ⚠ ALL REINFORCING STEEL TO BE DEFORMED BARS, CONFORMING TO AASHTO M-31, GRADE 60. ALL DIMENSIONS REFER TO THE CENTERLINE OF BAR.
3. WHEN NECESSARY, "T" BARS MAY BE SPLICED BY LAPPING AT LEAST 20 BAR DIAMETERS. PAY WEIGHT FOR REINFORCING STEEL DOES NOT INCLUDE SPLICES. THE COST OF THE SPLICE MATERIAL IS TO BE INCLUDED IN THE UNIT PRICE BID FOR REINFORCING STEEL.
4. VOLUME OF CONCRETE = (L) x (CONCRETE QUANTITY/LIN. FT.) PLUS CONCRETE AT ENDS.
5. WEIGHT OF REINFORCING STEEL = (L) x (WEIGHT OF REINF./LIN.FT.) PLUS WEIGHT AT ENDS.
6. PLACE "TA" BARS ON "A" BARS AND "TB" BARS UNDER "B" BARS, SPACED AS SHOWN IN THE TABLE, THE REMAINING "TA" BARS, AND "TB" BARS ARE TO BE PLACED ADJACENT TO THE "D", "E", "M", AND "N" BARS AS INDICATED IN "SECTION A-A", AT 2'-0 MAX.
7. PLACE "TS" BARS NEXT TO "C1" BARS, SPACED AS SHOWN IN THE TABLE; THE REMAINING "TS" BARS SHALL BE PLACED IN SIDEWALL NEXT TO "C2", "D", AND "E" BARS. WHEN "C1" BARS ARE NOT REQUIRED, PLACE ALL "TS" BARS NEXT TO "C2", "D", AND "E" BARS.
8. PLACE "A1", "A3", "B1", "B3", "M1", AND "N1" BARS SYMMETRICAL TO THE CENTERLINE OF THE BOX. PLACE "M2" AND "N2" BARS SYMMETRICAL TO THE CENTERLINE OF THE WALLS.
9. "COVER" IS HEIGHT OF FILL FROM TOP OF THE BOX TO THE FINISHED GRADE.

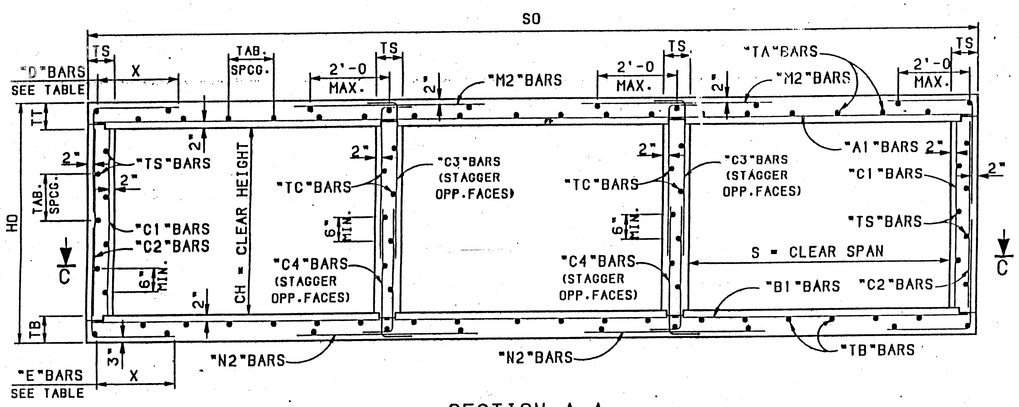

SECTION A-A

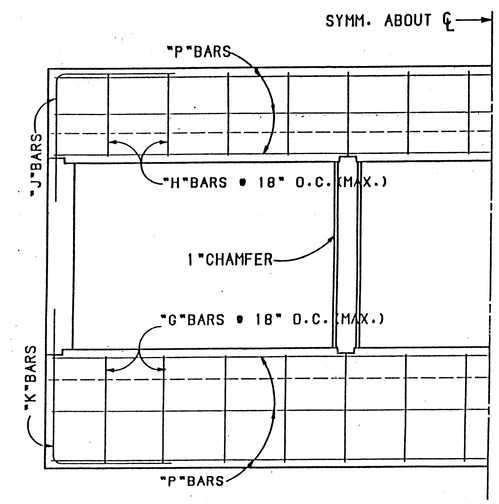

PART END ELEVATION

DESIGN DATA

DESIGN ACCORDING TO A.A.S.H.O. SPECIFICATIONS, 1957.
LIVE LOAD: H20-S16-44 & INTERSTATE ALTERNATE LOADING
WEIGHT OF FILL ON TOP OF BOX: 84#/CU.FT.
HORIZONTAL EARTH PRESSURE: 30#/CU.FT., 2' SURCHARGE
DESIGN STRESSES: f'c = 3000 psi, fc = 1200 psi,
fs = 20,000 psi, n = 10.

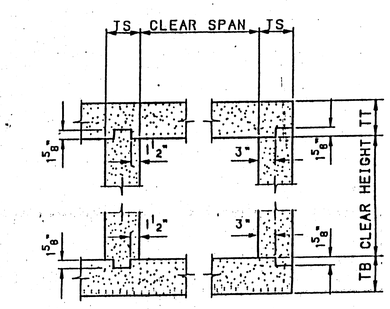

CONSTRUCTION JOINT DETAIL

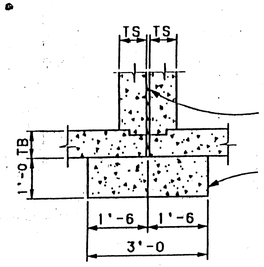

½" PREFORMED BITUMINOUS JOINT FILLER SHALL BE USED BETWEEN ADJACENT UNITS AND IT SHALL EXTEND BETWEEN BARRELS, PARAPETS, AND CUT-OFF WALLS.

THE FOUNDATION BLOCK SHALL BE PLACED IN NEAT EXCAVATION AND EXTENDED FOR THE ENTIRE LENGTH OF BARREL UNDER JOINT BETWEEN UNITS. PLACE ONE LAYER OF TAR PAPER OVER THE ENTIRE TOP SURFACE OF THE FOUNDATION BLOCK. CONCRETE QUANTITY = 0.111 CU. YDS. PER LIN. FT. OF BLOCK.

JOINT DETAIL FOR MULTIPLE UNIT BOXES

NO.	DESCRIPTION	DATE	BY
6			
5			
4			
3			
2			
1	REVISED NOTE #2	6-8-94	PH

REVISIONS (OR CHANGE NOTICES)

NEW MEXICO STATE HIGHWAY AND TRANSPORTATION DEPARTMENT

CONCRETE BOX CULVERT BARRELS
TRIPLE OPENING - NORMAL
ALL DESIGNS

GENERAL DATA
CITY PROJECT# 3725

LAYOUT BY
DRAWN BY
CHECKED BY
APPROVAL RECOMMENDED — BRIDGE ENGINEER — DATE
APPROVED — BRIDGE ENGINEER — DATE 2-22-94

SERIAL CB-33 SHEET 13 OF 32

DESIGNED BY: H.T. 10/60 CHECKED BY: S.J.M. 10/93
DETAILED BY: J.A.K. 10/93 CHECKED BY: R.A. 10/93
PLOT DATE: 10/28/93

BRIDGE#1/STANDARDS/BRIDGE/STANDARDS#16

N. M. P. ..... SHEET.....

| CLEAR SPAN | CLEAR HEIGHT | DIMENSIONS TT | TS | TB | SO | HO | Y | Z | QUANTITIES PER L.F. OF BARREL: REINFORCING STEEL POUNDS PER L.F. | CONCRETE CU. YDS. PER L.F. | AT ONE END ✱: REINFORCING STEEL POUNDS | CONCRETE CU. YDS. | REINFORCING BARS "A1" SIZE | "A1" LENGTH | "A2" SIZE | "A2" LENGTH | "A3" SIZE | "A3" LENGTH | "A" SPACING | "B1" SIZE | "B1" LENGTH | "B2" SIZE | "B2" LENGTH | "B3" SIZE | "B3" LENGTH | "B" SPACING | "C1" SIZE | "C1" SPACING | "C2" SIZE | "C2" SPACING | "C3" SIZE | "C3" LENGTH | "C4" LENGTH | "C" SPACING | "M1" SIZE | "M1" LENGTH | "M2" SIZE | "M2" LENGTH | "M" SPACING | "N1" SIZE | "N1" LENGTH | "N2" SIZE | "N2" LENGTH | "N" SPACING | "D" SIZE | "D" LENGTH | "X" | "D" SPACING | "E" SIZE | "E" LENGTH | "X" | "E" SPACING | "TA" NO. | "TA" SIZE | "TA" SPACING | "TB" NO. | "TB" SIZE | "TB" SPACING | "TC" NO. | "TC" SIZE | "TC" SPACING | "TS" NO. | "TS" SIZE | "TS" SPACING | G.H. NO. OF EA. AT 1 END |
|---|---|---

POINT DATA

POINT	STATION	OFFSET	INV ELEV
1	52+18.89	148.09' RT	5201.80+-
2	52+01.40	56.79' RT	5202.53
3	52+35.23	89.38' LT	5203.58
4	52+65.93	107.92' LT	5203.86
5	52+92.11	165.49' LT	5205.30+-

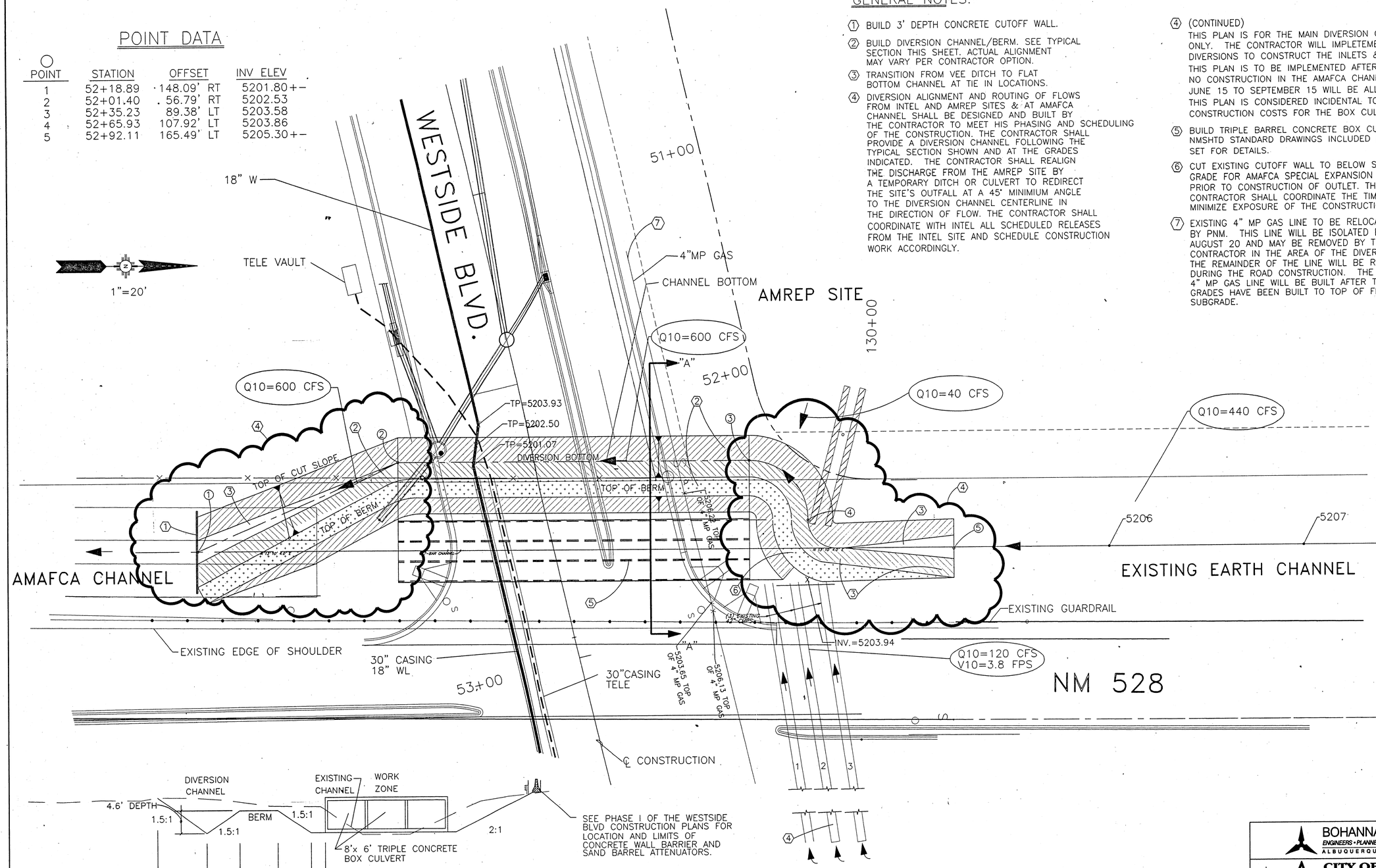

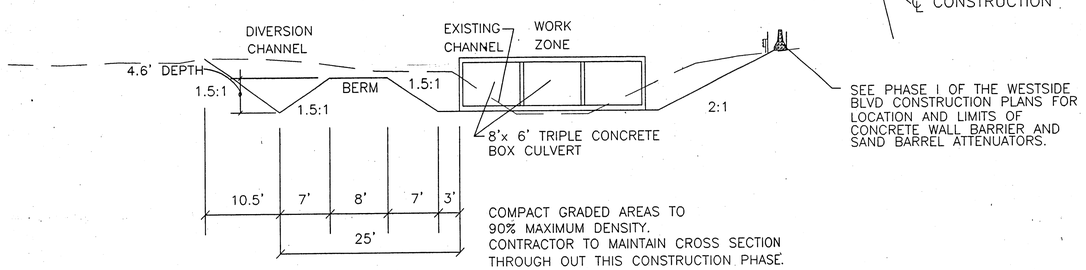

SEE PHASE I OF THE WESTSIDE BLVD CONSTRUCTION PLANS FOR LOCATION AND LIMITS OF CONCRETE WALL BARRIER AND SAND BARREL ATTENUATORS.

COMPACT GRADED AREAS TO 90% MAXIMUM DENSITY. CONTRACTOR TO MAINTAIN CROSS SECTION THROUGH OUT THIS CONSTRUCTION PHASE. CONTRACTOR WILL REPAIR ANY DAMAGE TO EARTH BERM AND CHANNEL.

CHANNEL/BERM TYPICAL SECTION

SECTION "A-A"

GENERAL NOTES:

1. BUILD 3' DEPTH CONCRETE CUTOFF WALL.
2. BUILD DIVERSION CHANNEL/BERM. SEE TYPICAL SECTION THIS SHEET. ACTUAL ALIGNMENT MAY VARY PER CONTRACTOR OPTION.
3. TRANSITION FROM VEE DITCH TO FLAT BOTTOM CHANNEL AT TIE IN LOCATIONS.
4. DIVERSION ALIGNMENT AND ROUTING OF FLOWS FROM INTEL AND AMREP SITES & AT AMAFCA CHANNEL SHALL BE DESIGNED AND BUILT BY THE CONTRACTOR TO MEET HIS PHASING AND SCHEDULING OF THE CONSTRUCTION. THE CONTRACTOR SHALL PROVIDE A DIVERSION CHANNEL FOLLOWING THE TYPICAL SECTION SHOWN AND AT THE GRADES INDICATED. THE CONTRACTOR SHALL REALIGN THE DISCHARGE FROM THE AMREP SITE BY A TEMPORARY DITCH OR CULVERT TO REDIRECT THE SITE'S OUTFALL AT A 45° MINIMIUM ANGLE TO THE DIVERSION CHANNEL CENTERLINE IN THE DIRECTION OF FLOW. THE CONTRACTOR SHALL COORDINATE WITH INTEL ALL SCHEDULED RELEASES FROM THE INTEL SITE AND SCHEDULE CONSTRUCTION WORK ACCORDINGLY.

4. (CONTINUED)
THIS PLAN IS FOR THE MAIN DIVERSION CHANNEL ONLY. THE CONTRACTOR WILL IMPLETEMENT ADDITONAL DIVERSIONS TO CONSTRUCT THE INLETS & OUTLETS
THIS PLAN IS TO BE IMPLEMENTED AFTER SEPT 15, 1996
NO CONSTRUCTION IN THE AMAFCA CHANNEL FROM JUNE 15 TO SEPTEMBER 15 WILL BE ALLOWED.
THIS PLAN IS CONSIDERED INCIDENTAL TO THE CONSTRUCTION COSTS FOR THE BOX CULVERT.

5. BUILD TRIPLE BARREL CONCRETE BOX CULVERT. SEE NMSHTD STANDARD DRAWINGS INCLUDED IN THE PLAN SET FOR DETAILS.
6. CUT EXISTING CUTOFF WALL TO BELOW SLAB GRADE FOR AMAFCA SPECIAL EXPANSION JOINT PRIOR TO CONSTRUCTION OF OUTLET. THE CONTRACTOR SHALL COORDINATE THE TIMING TO MINIMIZE EXPOSURE OF THE CONSTRUCTION TO RUNOFF.
7. EXISTING 4" MP GAS LINE TO BE RELOCATED BY PNM. THIS LINE WILL BE ISOLATED BY AUGUST 20 AND MAY BE REMOVED BY THE CONTRACTOR IN THE AREA OF THE DIVERSION. THE REMAINDER OF THE LINE WILL BE REMOVED DURING THE ROAD CONSTRUCTION. THE NEW 4" MP GAS LINE WILL BE BUILT AFTER THE ROAD GRADES HAVE BEEN BUILT TO TOP OF FINISHED SUBGRADE.

AS-BUILT INFORMATION

		DATE
	CONTRACTOR	
	STAKED BY	DATE
	INSPECTOR'S CUTTINGS BY	DATE
	FIELD VERIFICATION BY	DATE
	DRAWINGS CORRECTED BY	DATE

MICRO-FILM INFORMATION

RECORDED BY	DATE
NO.	

BENCH MARKS

A.C.S. 1 3/4" ALUMINUM DISK, STAMPED "A.C.S. BM. 2-$13 EPOXIED TO TOP OF CONCRETE BASE OF GALV STL POLE #IC-28 AT ANGLE PT. IN THE ELECTRIC TRANSMISSION 248' +/- NORTHERLY OF THE BERNAILLO/ SANDOVAL COUNTY LINE, 78.5' EASTERLY OF Q. OF RIO RANCHO BLVD (SR 528) ON SW CORNER OF SAID CONC BASE. FIELD ELEV= 5215.872. SEE SHT 5 FOR LOCATION

SURVEY INFORMATION

FIELD NOTES

NO.	BY	DATE

ENGINEER'S SEAL

NO.	DATE	REMARKS	BY
		REVISIONS	
		DESIGN	

DESIGNED BY TG DATE 8-96
DRAWN BY TG/SG DATE 8-96
CHECKED BY TG DATE 8-96

BOHANNAN-HUSTON INC.
ENGINEERS • PLANNERS • PHOTOGRAMMETRISTS • SURVEYORS • LANDSCAPE • ARCHITECTS
ALBUQUERQUE LAS CRUCES SANTA FE

CITY OF ALBUQUERQUE
PUBLIC WORKS DEPARTMENT
ENGINEERING DEVELOPMENT GROUP

TITLE: WESTSIDE BLVD.
CHANNEL DIVERSION PLAN

DESIGN REVIEW COMMITTEE	CITY ENGINEER APPROVAL	LAST DESIGN UPDATE	MO./DAY/YR.	MO./DAY/YR.

CITY PROJECT NO.	ZONE MAP NO.	SHEET	OF
3725	A-13-Z	15	32

TRANS:[T95343A32222.SHEETS.DRAINAGE]PHASE2R.DWG 8\22\96 10:50 am

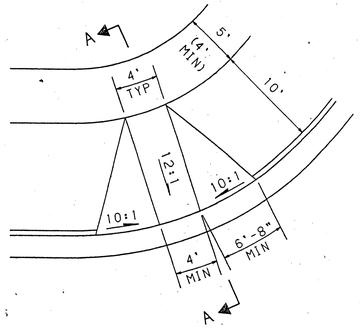

PLAN

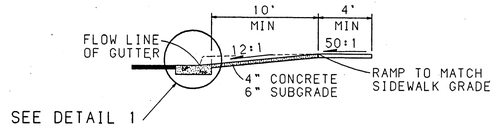

SECTION A-A

PERPENDICULAR RAMP TYPE A

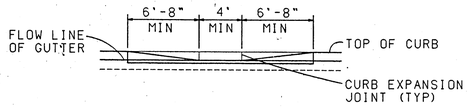

ELEVATION

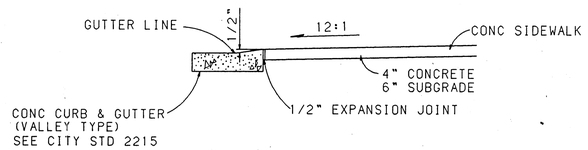

DETAIL 1

NTS

AS-BUILT INFORMATION

CONTRACTOR	DATE
WORK STAKED BY	DATE
INSPECTOR'S ACCEPTANCE BY	DATE
FIELD VERIFICATION BY	DATE
DRAWINGS CORRECTED BY	DATE

MYLARD-FILM INFORMATION

RECORDED BY	DATE
NO.	

BENCH MARKS

SURVEY INFORMATION

FIELD NOTES

NO.	BY	DATE

ENGINEER'S SEAL

NO.	DATE	REMARKS	BY

REVISIONS

DESIGN

DESIGNED BY BHI/MAH	DATE 8-96
DRAWN BY BHI/SLP	DATE 8-96
CHECKED BY BHI/MAH	DATE 8-96

BOHANNAN-HUSTON INC.
ENGINEERS • PLANNERS • PHOTOGRAMMETRISTS • SURVEYORS • LANDSCAPE ARCHITECTS
ALBUQUERQUE LAS CRUCES SANTA FE

CITY OF ALBUQUERQUE
PUBLIC WORKS DEPARTMENT
ENGINEERING GROUP

TITLE: WESTSIDE BLVD
WHEELCHAIR RAMP DETAIL

3725	A-13-Z	16	32

TRANS:CT9534314.SHEETS.GENERAL]WCR-DTL.GRF

GENERAL NOTES

1. ALL TRAFFIC CONTROL DEVICES SHALL COMPLY WITH THE CURRENT EDITION OF THE STANDARD SPECIFICATIONS FOR ROAD AND BRIDGE CONSTRUCTION, AND ALL APPLICABLE SPECIAL PROVISIONS AND SUPPLEMENTAL SPECIFICATIONS, AND THE MANUAL ON UNIFORM TRAFFIC CONTROL DEVICES (MUTCD), CURRENT EDITION AND CURRENT REVISIONS.

2. BID ITEM - (TEMPORARY CONCRETE WALL BARRIER - REFERRED TO AS CWB). ALL PRECAST CWB PROVIDED BY THE CONTRACTOR SHALL BE NEW CWB COMPLETE WITH SHOP DRAWINGS. PRECAST CWB WHEN USED FOR TRAFFIC CONTROL PURPOSES SHALL BECOME THE PROPERTY OF THE CONTRACTOR AT COMPLETION OF THE PROJECT.

   PRECAST CWB SHALL BE FABRICATED IN 10 FOOT UNITS TO THE DIMENSIONS SHOWN ON PLANS. ALL PRECAST CWB UTILIZED IN THE WORK SHALL BE OF THE SAME LENGTH AND DESIGN. INTERMIXING WILL NOT BE ALLOWED. WORK SHALL BE DONE IN ACCORDANCE WITH APPLICABLE SPECIFICATIONS OF SECTION 510 - PORTLAND CEMENT CONCRETE AND SECTION 540 - STEEL REINFORCEMENT.

   WHEN NEW PRECAST CWB IS CALLED FOR IN THE PLANS, THE CWB SHALL BE DELIVERED TO THE DESIGNATED AREA AND SITE AFTER COMPLETION OF WORK. CONTRACTOR IS TO UNLOAD AND STOCKPILE PRECAST CWB AS DIRECTED BY THE PROJECT MANAGER. HAULING AND STOCKPILING OF NEW PRECAST CWB TO DESIGNATED AREA AND SITE SHALL BE INCIDENTAL TO THE UNIT BID PRICE FOR TEMPORARY CWB.

3. ALL SIGN FACES SHALL BE MOUNTED ON A PORTABLE SIGN SUPPORT.

4. BID ITEM - (BARRICADE, TYPE III - 6' OR 8'). TYPE III BARRICADES SHALL BE ORANGE ON WHITE REFLECTORIZED. ATTACHED TYPE "A" FLASHING BEACONS, ARROWS, AND ROAD OR LANE CLOSED SIGNS ARE TO BE INCIDENTAL TO THE UNIT BID PRICE.

6. BID ITEM - (CHANNELIZATION DEVICES (BARRELS) TYPE "H"). CHANNELIZATION DEVICES (BARRELS) SHALL BE ORANGE ON WHITE REFLECTORIZED. BARRELS SHALL BE EQUIPPED WITH BEACONS IN ACCORDANCE WITH APPLICABLE SPECIFICATIONS OF SECTION 702.224(a).

8. BID ITEM - (SAND BARREL VEHICULAR IMPACT ATTENUATOR). SAND BARREL VEHICULAR IMPACT ATTENUATORS, UNLESS OTHERWISE SPECIFIED, SHALL BECOME THE PROPERTY OF THE CONTRACTOR AT COMPLETION OF CONSTRUCTION.

9. TRAFFIC CONTROL PLANS AND QUANTITIES MAY VARY AS FIELD CONDITIONS DICTATE. THE CONTRACTOR WILL BE PAID FOR ACTUAL QUANTITIES USED. PLACEMENT, RELOCATION, AND MAINTENANCE OF TRAFFIC CONTROL DEVICES AS SHOWN ON THE PLANS, OR AS DIRECTED BY THE PROJECT MANAGER IS TO BE INCIDENTAL TO THE UNIT BID PRICE.

10. ALL CONSTRUCTION SIGNING SHALL BE BLACK ON REFLECTIVE ORANGE UNLESS OTHERWISE SPECIFIED. ALL CONSTRUCTION BARRICADES AND CHANNELIZATION DEVICES SHALL BE ORANGE ON WHITE REFLECTORIZED UNLESS OTHERWISE SPECIFIED.

11. EACH SIGN FACE SHOWN ON PLANS SHALL MEET THE SPECIFICATIONS IN THE STANDARD HIGHWAY SIGNS MANUAL (1979 EDITION) FOR PROPER ARRANGEMENT, SPACING OF LETTERS, LETTER HEIGHT, LETTER SERIES, SYMBOLS, AND BORDERS FOR THE SPECIFIED SIZE AND MESSAGE AS SHOWN ON THE PLANS.

12. ALL NON-APPLICABLE SIGNING SHALL BE REMOVED OR COVERED COMPLETELY WITH AN OPAQUE NON LIGHT-TRANSMITTING MATERIAL. ALL REMAINING NON-APPLICABLE TRAFFIC CONTROL DEVICES ARE TO BE REMOVED AND STORED AT LOCATIONS DESIGNATED BY THE PROJECT MANAGER.

13. FLAGGING SHALL BE PROVIDED FOR SAFETY PURPOSES AS DIRECTED BY THE PROJECT MANAGER. FLAGGERS SHALL USE STOP/SLOW PADDLES (18"X18" MIN.) IN ACCORDANCE WITH THE MUTCD. THE FLAGGER, PADDLE AND OTHER PERSONAL EQUIPMENT SHALL BE CONSIDERED INCIDENTAL TO CONSTRUCTION AND NO PAYMENT OR MEASUREMENT WILL BE MADE THEREFORE.

14. THE PROVISIONS AS INCLUDED IN THE PLANS AND SPECIFICATIONS FOR HANDLING AND CONTROLLING TRAFFIC DURING CONSTRUCTION OF THE PROJECT MAY BE CHANGED BY THE PROJECT MANAGER WITH APPROVAL OF THE DISTRICT TRAFFIC ENGINEER. SHOULD FIELD CONDITIONS WARRANT A CHANGE IN THE PLAN, THEY SHALL BE ISSUED IN WRITING TO THE CONTRACTOR AND SHALL BE CONSIDERED AN AMENDMENT TO THE PLANS AS OF THE DATE OF THE CHANGE.

GENERAL NOTES CONTINUED

15. THE CONTRACTOR SHALL SUBMIT ANY PROPOSED CHANGES IN THE TRAFFIC CONTROL PLAN TO THE PROJECT MANAGER FOR APPROVAL BY THE DISTRICT TRAFFIC ENGINEER. NO PAYMENT WILL BE MADE FOR ANY ADDITIONAL COST RESULTING FROM APPROVED TRAFFIC CONTROL PLAN CHANGES REQUESTED BY THE CONTRACTOR.

16. THE CONTRACTOR SHALL HAVE A RESPONSIBLE PERSON ON SITE DURING WORKING HOURS AND ON CALL DURING NON-WORKING HOURS TO INSPECT AND MAINTAIN PROJECT TRAFFIC CONTROL AS DIRECTED BY THE PROJECT MANAGER.

17. THE FOLLOWING PROCEDURES SHALL GOVERN ALL TRAFFIC CONTROL PLANS INVOLVING REGULATORY AND ADVISORY SPEED LIMIT SIGNING:

    THE REGULATORY AND ADVISORY SPEED LIMIT POSTINGS, AS PART OF THE TRAFFIC CONTROL PLANS ARE SHOWN ON THE SIGN FACE DETAIL SHEET. FOR VARIATION FROM THE TRAFFIC CONTROL PLAN, AN ENGINEERING STUDY SHALL BE DONE AT THE PROJECT SITE. THE ENGINEERING STUDY SHALL BE PERFORMED BY THE DISTRICT TRAFFIC ENGINEER IN ACCORDANCE WITH SECTION 2B-10 OF THE 1988 EDITION OF THE MUTCD AND SECTION 1C OF THE TRAFFIC CONTROL DEVICES HANDBOOK.

18. BARRICADES AND SIGNING SHOWN IN THE TRAFFIC CONTROL PLANS AND DUPLICATED IN THE PERMANENT SIGNING PLANS SHALL BE PAID FOR ONE TIME AS UNDER TRAFFIC CONTROL BID ITEMS. NO PAYMENT WILL BE MADE UNDER THE PERMANENT SIGNING BID ITEMS. THESE SIGNS AND BARRICADES WILL BE NOTED ON THE PERMANENET SIGNING PLANS FOR CLARITY OF PAYMENT.

19. ALL PAVEMENT MARKINGS USED DURING THE TRAFFIC CONTROL PHASE OF THIS PROJECT SHALL BE REMOVABLE REFLECTORIZED MARKING TAPE. THE CONTRACTOR SHALL MAINTAIN THE MARKING TAPE AT ALL TIMES.

SEQUENCE OF CONSTRUCTION

1. LANE CLOSURES ON NM 528 SHALL BE RESTRICTED AS FOLLOWS: THE CONTRACTOR SHALL PROVIDE 2 LANES NORTHBOUND AND 2 LANES SOUTHBOUND DURING THE PERIOD BEFORE 9:00 AM AND AFTER 3:00 PM EACH DAY. THIS MEANS THAT NO TCP SHALL BE SET BEFORE 9:00 AM AND ALL TCP SHALL BE REMOVED BY 3:00 PM - NO EXCEPTIONS.

2. CONTRACTOR SHALL REMOVE ALL CONFLICTING STRIPING. ALL TEMPORARY STRIPING TO BE TEMPORARY TAPE STRIPING.

3. CONTRACTOR SHALL REPLACE ALL ORIGINAL STRIPING REMOVED DURING THE CONSTRUCTION OF THIS PROJECT. THIS ITEM IS INCIDENTAL.

PHASE I

CONSTRUCT CBC, ALL WEST LEG IMPROVEMENTS THAT OCCUR BEHIND EXISTING GUARDRAIL, WEST OF NM 528. TWO LANES SOUTHBOUND AND TWO LANES NORTHBOUND ON NM 528 WILL BE MAINTAINED. CONSTRUCTION OCCURS IN THE SHOULDER AREA ONLY.

PHASE II

SAWCUTTING AND MATCHING EXISTING PAVEMENT AT STA 52+94.00 (NM 528) AND SW CORNER CONSTRUCTION OF CURB & GUTTER TO SHOULDER ON NM528 SHALL BE CONSTRUCTED AS QUICKLY AS POSSIBLE TO MINIMIZE IMPACT TO TRAFFIC. TRAFFIC WILL BE RESTRICTED TO ONE LANE SOUTHBOUND BETWEEN 9:00 AM & 3:00 PM DAILY. CONSTRUCTION SHOULD PROCEED DURING A WEEKEND PERIOD OR AT NIGHT TO EXPEDIATE THIS CONSTRUCTION.

SIGN FACE DETAILS

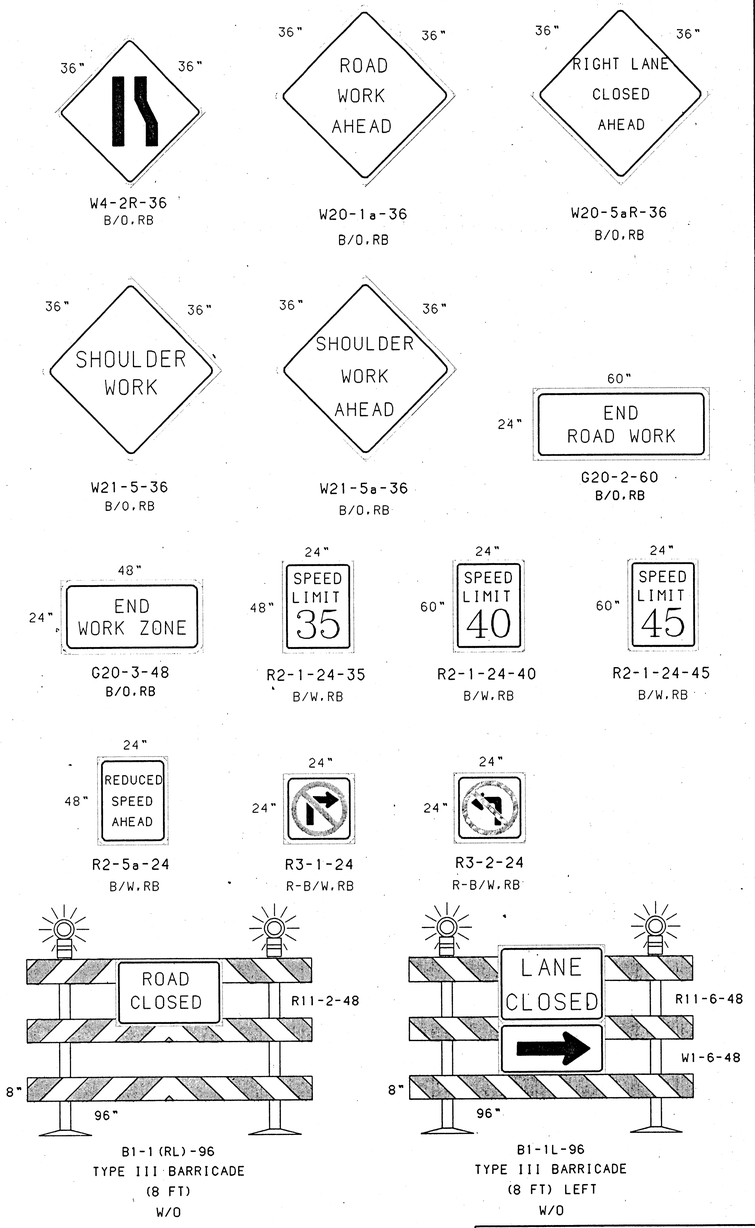

AS-BUILT INFORMATION

CONTRACTOR — DATE
STAKED BY — DATE
INSPECTOR'S ACCEPTANCE BY — DATE
FIELD VERIFICATION BY — DATE
DRAWINGS CORRECTED BY — DATE

MICRO-FILM INFORMATION

RECORDED BY — DATE
NO.

BENCH MARKS

SURVEY INFORMATION

FIELD NOTES

NO.	BY	DATE

ENGINEER'S SEAL

NO.	DATE	REMARKS	BY
		REVISIONS	
		DESIGN	

DESIGNED BY BHI/MAH — DATE 1-96
DRAWN BY BHI/MAH — DATE 1-96
CHECKED BY BHI/MAH — DATE 1-96

BOHANNAN-HUSTON INC.
ENGINEERS • PLANNERS • PHOTOGRAMMETRISTS • SURVEYORS • LANDSCAPE ARCHITECTS
ALBUQUERQUE LAS CRUCES SANTA FE

CITY OF ALBUQUERQUE
PUBLIC WORKS DEPARTMENT
ENGINEERING GROUP

TITLE: WESTSIDE BLVD
TRAFFIC CONTROL GENERAL NOTES,
SEQUENCE OF CONSTRUCTION & SIGN FACE DETAILS

3725	A-13-Z	17	32

TRANS:CT9534314.SHEETS.CONSTRJTC-NOTES.GRF

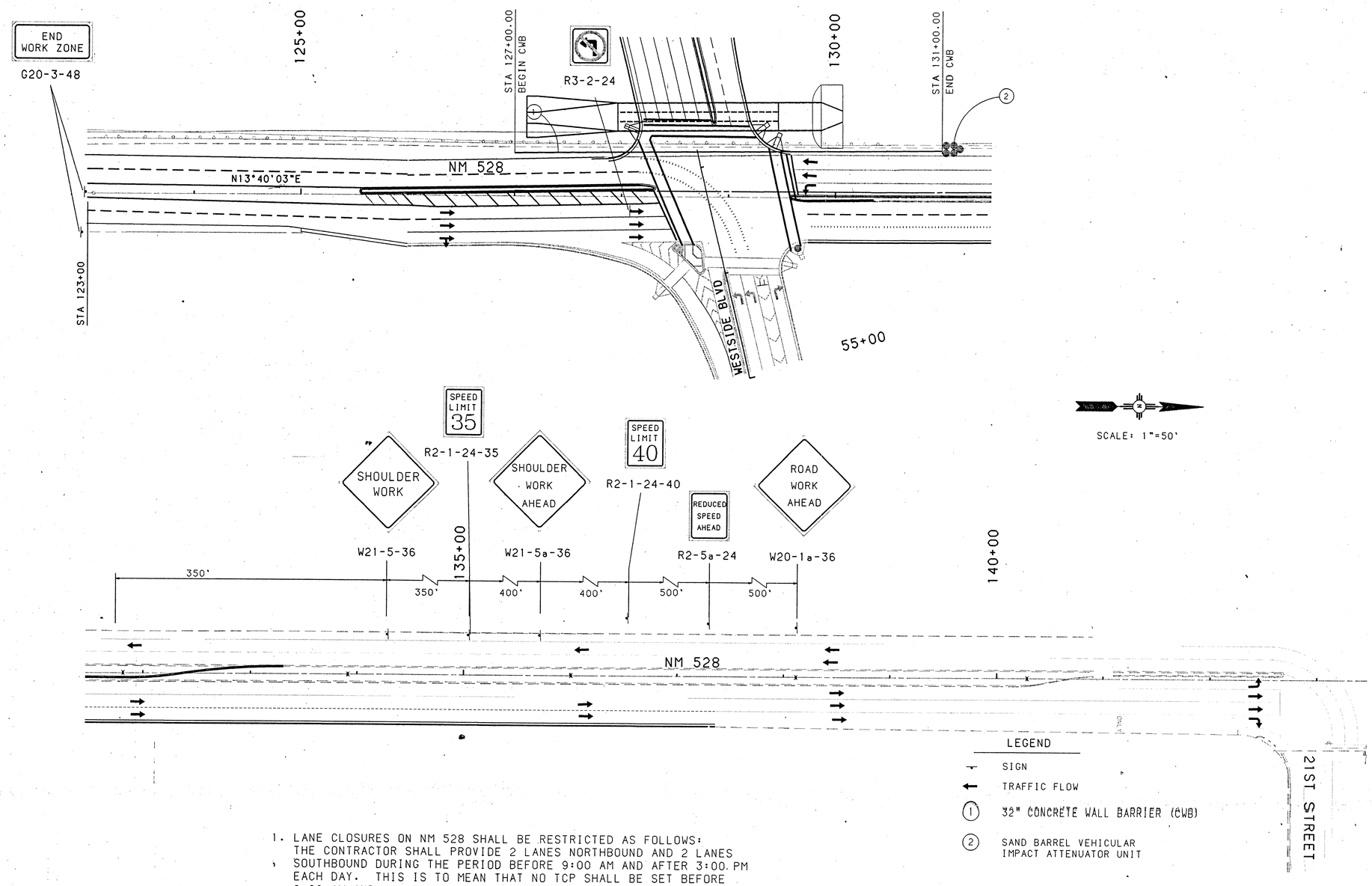

1. LANE CLOSURES ON NM 528 SHALL BE RESTRICTED AS FOLLOWS: THE CONTRACTOR SHALL PROVIDE 2 LANES NORTHBOUND AND 2 LANES SOUTHBOUND DURING THE PERIOD BEFORE 9:00 AM AND AFTER 3:00 PM EACH DAY. THIS IS TO MEAN THAT NO TCP SHALL BE SET BEFORE 9:00 AM AND ALL TCP SHALL BE REMOVED BY 3:00 PM - NO EXCEPTIONS.
2. CONTRACTOR SHALL REMOVE ALL CONFLICTING STRIPING. ALL TEMPORARY STRIPING TO BE TEMPORARY TAPE STRIPING.
3. CONTRACTOR SHALL REPLACE ALL ORIGINAL STRIPING REMOVED DURING THE CONSTRUCTION OF THIS PROJECT. THIS ITEM IS INCIDENTAL.

AS-BUILT INFORMATION

CONTRACTOR	DATE
WORK STAKED BY	DATE
INSPECTOR'S ACCEPTANCE BY	DATE
FIELD VERIFICATION BY	DATE
DRAWINGS CORRECTED BY	DATE

MICRO-FILM INFORMATION

RECORDED BY	DATE
NO.	

BENCH MARKS

SURVEY INFORMATION

FIELD NOTES

NO.	BY	DATE

ENGINEER'S SEAL

F. E. GRAY 10148 REGISTERED PROFESSIONAL ENGINEER 8/21/96

REVISIONS

NO.	DATE	REMARKS	BY

DESIGN

DESIGNED BY BHI/MAH DATE 1-96

DRAWN BY BHI/MAH DATE 1-96

CHECKED BY BHI/ DATE 1-96

BOHANNAN-HUSTON INC.
ENGINEERS • PLANNERS • PHOTOGRAMMETRISTS • SURVEYORS • LANDSCAPE ARCHITECTS
ALBUQUERQUE LAS CRUCES SANTA FE

CITY OF ALBUQUERQUE
PUBLIC WORKS DEPARTMENT
ENGINEERING GROUP

TITLE: WESTSIDE BLVD
PHASE I
TRAFFIC CONTROL PLAN

3725 | A-13-Z | 18 | 32

TRANS+CT9534314.SHEETS.CONSTRL]TC-PLAN1.GRF

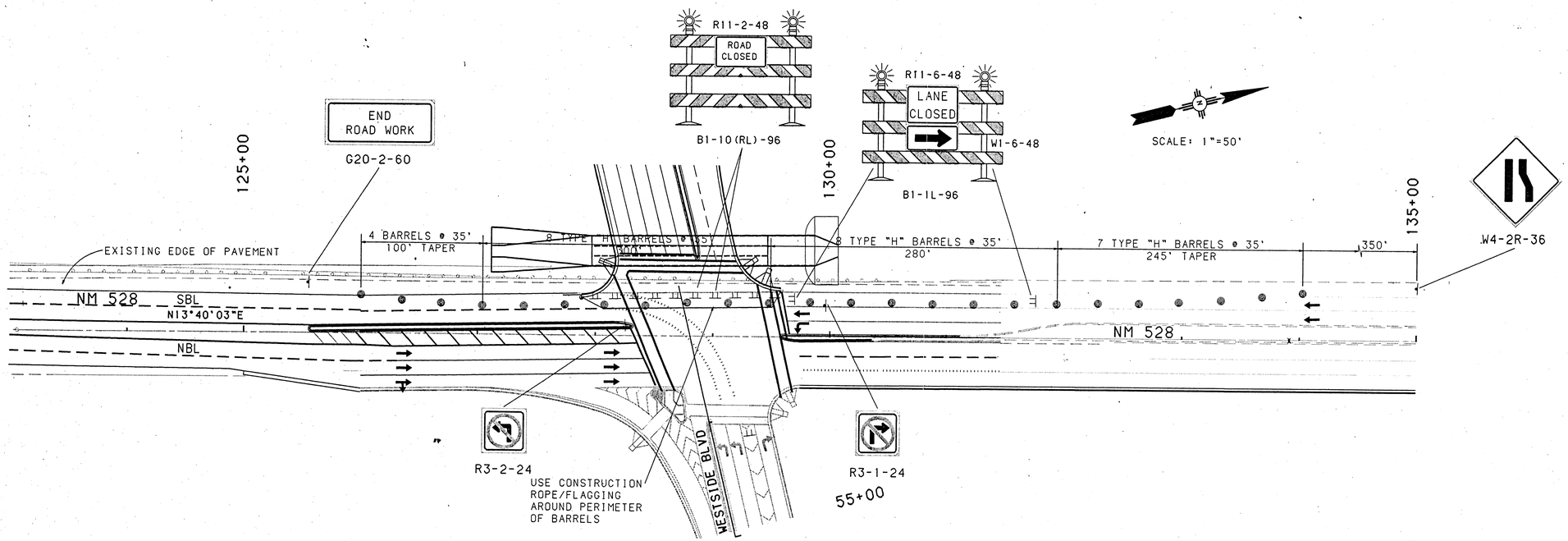

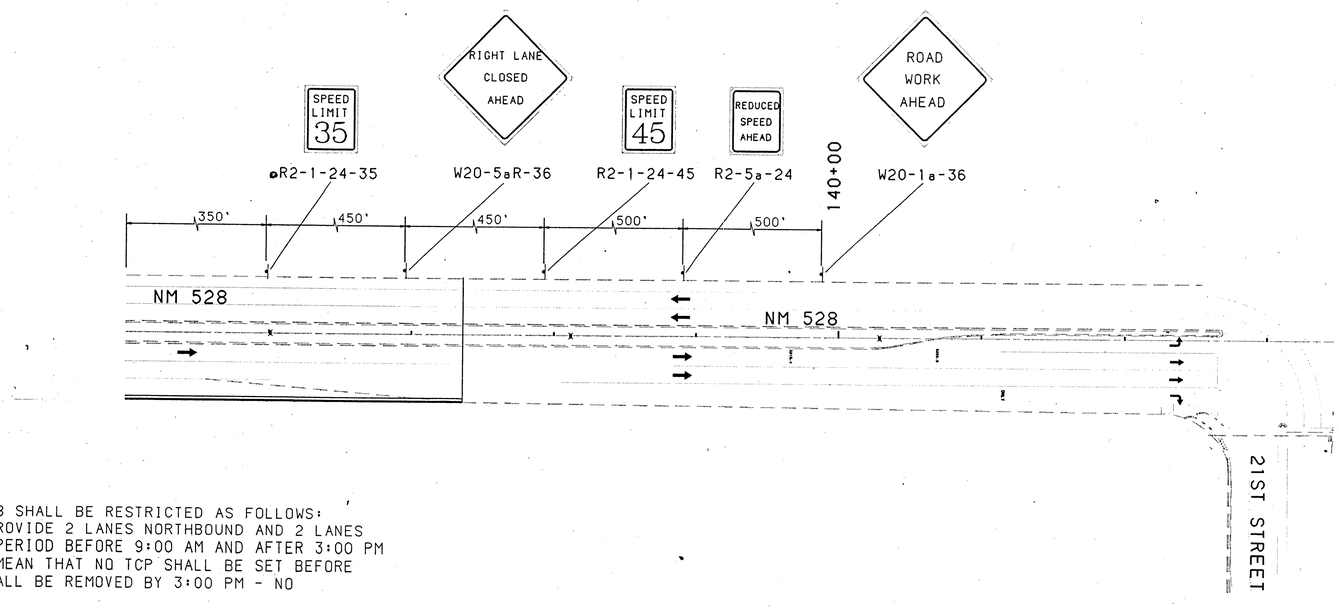

1. LANE CLOSURES ON NM 528 SHALL BE RESTRICTED AS FOLLOWS: THE CONTRACTOR SHALL PROVIDE 2 LANES NORTHBOUND AND 2 LANES SOUTHBOUND DURING THE PERIOD BEFORE 9:00 AM AND AFTER 3:00 PM EACH DAY. THIS IS TO MEAN THAT NO TCP SHALL BE SET BEFORE 9:00 AM AND ALL TCP SHALL BE REMOVED BY 3:00 PM - NO EXCEPTIONS.
2. CONTRACTOR SHALL REMOVE ALL CONFLICTING STRIPING. ALL TEMPORARY STRIPING TO BE TEMPORARY TAPE STRIPING.
3. CONTRACTOR SHALL REPLACE ALL ORIGINAL STRIPING REMOVED DURING THE CONSTRUCTION OF THIS PROJECT. THIS ITEM IS INCIDENTAL.

AS-BUILT INFORMATION
CONTRACTOR — DATE
WORK STAKED BY — DATE
INSPECTOR'S ACCEPTANCE BY — DATE
FIELD VERIFICATION BY — DATE
DRAWINGS CORRECTED BY — DATE
MICRO-FILM INFORMATION
RECORDED BY — DATE
NO.

BENCH MARKS

SURVEY INFORMATION
FIELD NOTES
NO. | BY | DATE

ENGINEER'S SEAL
FRED F. GRIEGO III
NEW MEXICO
REGISTERED PROFESSIONAL ENGINEER
8-12-96

NO.	DATE	REMARKS	BY
		REVISIONS	
		DESIGN	

DESIGNED BY BHI/MAH — DATE 1-96
DRAWN BY BHI/MAH — DATE 1-96
CHECKED BY BHI/MAH — DATE 1-96

BOHANNAN-HUSTON INC.
ENGINEERS • PLANNERS • PHOTOGRAMMETRISTS • SURVEYORS • LANDSCAPE ARCHITECTS
ALBUQUERQUE LAS CRUCES SANTA FE

CITY OF ALBUQUERQUE
PUBLIC WORKS DEPARTMENT
ENGINEERING GROUP

TITLE: WESTSIDE BLVD
PHASE II
TRAFFIC CONTROL PLAN

3725 | A-13-Z | 19 | 32

TRANS*ET9534314.SHEETS.CONSTRJTC-PLAN2.GRF

GENERAL NOTES:

1. ALL SIGNS, UNLESS OTHERWISE SPECIFIED, SHALL HAVE REFLECTIVITY III SHEETING FOR THE LEGEND, BORDER AND BACKGROUND. ONLY ALUMINUM PANEL SIGNS ARE PERMITTED. ALL SIGNS SHALL HAVE A GRAFITTI RESISTANT COVERING OR BE MADE OF GRAFITTI RESISTANT MATERIALS.

2. QUANTITIES MAY VARY AS FIELD CONDITIONS DICTATE. THE CONTRACTOR WILL BE PAID FOR ACTUAL QUANTITIES USED.

3. ALL TRAFFIC CONTROL DEVICES SHALL COMPLY WITH NM STANDARD SPECIFICATIONS FOR ROAD AND BRIDGE CONSTRUCTION (1994 EDITION) AND ANY APPLICABLE SPECIAL PROVISIONS AND/OR SUPPLEMENTAL SPECIFICATIONS. SPECIAL NOTE OF SECTIONS 701.215 AND 701.452 - ALSO THE CURRENT EDITION, WITH REVISIONS, OF THE MUTCD.

4. EACH SIGN FACE SHOWN ON PLANS SHALL MEET THE SPECIFICATIONS IN THE STANDARD HIGHWAY SIGNS MANUAL (1979 EDITION) FOR PROPER ARRANGEMENT, SPACING OF LETTERS, LETTER HEIGHT, LETTER SERIES, SYMBOLS AND BORDERS FOR THE SPECIFIED SIZE AND MESSAGE AS SHOWN ON PLANS.

5. THE LATERAL CLEARANCE OF SIGNS SHALL BE NO CLOSER THAN 6 FT FROM THE EDGE OF SHOULDER OR 12 FT FROM THE EDGE OF THE TRAVELED WAY FOR RURAL AREAS AND NO CLOSER THAN 2 FT FROM FACE OF CURB FOR URBAN AREAS.

6. ALL SIGNING HARDWARE, INCLUDING BRACKETS, (FOR MOUNTING ALL STREET NAME SIGNS, W1-8-18 BACK TO BACK MOUNTING, ETC.) ARE CONSIDERED INCIDENTAL TO SIGN INSTALLATION. THEREFORE NO PAYMENT WILL BE MADE.

7. THREE 4 LB/FT SIGN POST INSTALLATION APPROVED ONLY IF THE SPAN BETWEEN THE OUTER POSTS EXCEEDS 84" (SIGN WIDTH OF 96" OR GREATER).

8. ACCESS TO RESIDENCES/BUSINESSES SHALL BE KEPT OPEN IN AS FAR AS POSSIBLE. ACCESS CLOSURES MUST BE SCHEDULED AT LEAST 24 HRS IN ADVANCE AND APPROVED BY THE PROJECT MANAGER.

9. BID ITEM - STEEL POSTS AND BASE POSTS FOR SIGNS: THE CONTRACTOR SHALL FURNISH AND INSTALL SQUARE TUBE DRIVEDOWN POSTS FOR STEEL POSTS AND BASE POSTS. REFER TO NEW MEXICO STATE HIGHWAY AND TRANSPORTATION DEPARTMENT SPECIAL DRAWINGS "ALUMINUM PANEL SIGN DETAILS".

10. POST LENGTHS AND SECTION ARE BASED ON 7'-0" CLEARANCE HEIGHT FROM THE BOTTOM OF THE SIGN (EXCEPT WHERE INDICATED ON THE PLANS) TO NEAR EDGE OF DRIVING LANE. FINAL POST LENGTHS AND SECTIONS ARE TO BE DETERMINED IN THE FIELD.

11. MOUNTING SIZE REQUIREMENTS SHALL BE 12 GA, 1 3/4" X 1 3/4" X 10' (2.060 LB/FT) FOR SIGN POSTS AND 12 GA, 2" X 2" X 30" (2.416 LB/FT) FOR SIGN POST DRIVEDOWN POSTS.

12. ALL TEMPORARY AND PERMANENT STRIPING & PAVEMENT MARKINGS SHALL BE RETROREFLECTIVE. SEE PLAN SHEETS FOR DETAILS.

SIGN FACE DETAILS

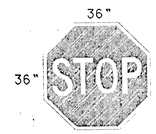

R1-1-36
W/R, RL-RB

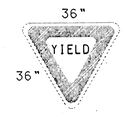

R1-2-36
W/R, RL-RB

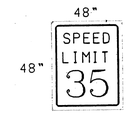

R2-1-48-35
B/W, RB

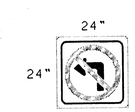

R3-2-24
R-B/W, RL-RB

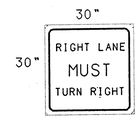

R3-7R-30
B/W, RB

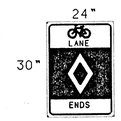

R3-16a-24
B/W, RB

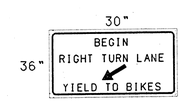

R4-4-30
B/W, RB

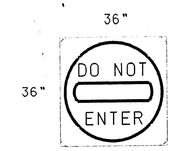

R5-1-36
R/W, RL-RB

SEE SHEET 17 FOR FLASHERS

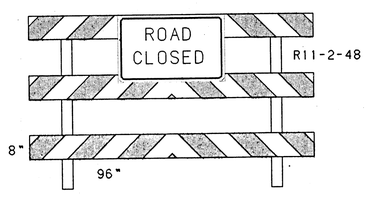

B1-1 (RL) -96
TYPE III BARRICADE
(8 FT)
W/O
PERMANENT

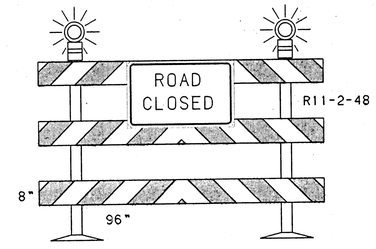

B1-1 (RL) -96
TYPE III BARRICADE
(8 FT)
W/O
TEMPORARY

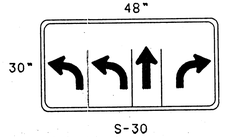

S-30
(2 POST REQUIRED)

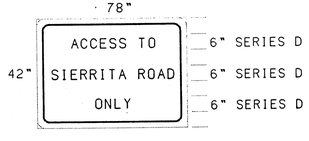

S-31
RL/RB, W/G

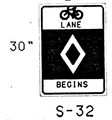

S-32
B/W, RB

AS-BUILT INFORMATION

CONTRACTOR	DATE
WORK STAKED BY	DATE
INSPECTOR'S ACCEPTANCE BY	DATE
FIELD MODIFICATION BY	DATE
DRAWINGS CORRECTED BY	DATE

MICRO-FILM INFORMATION

RECORDED BY	DATE
NO.	

BENCH MARKS

SURVEY INFORMATION

FIELD NOTES

NO.	BY	DATE

ENGINEER'S SEAL

NO.	DATE	REMARKS	BY
		REVISIONS	
		DESIGN	

DESIGNED BY BHI/MAH DATE 1-96
DRAWN BY BHI/MAH DATE 1-96
CHECKED BY BHI/MAH DATE 1-96

BOHANNAN-HUSTON INC.
ENGINEERS • PLANNERS • PHOTOGRAMMETRISTS • SURVEYORS • LANDSCAPE ARCHITECTS
ALBUQUERQUE LAS CRUCES SANTA FE

CITY OF ALBUQUERQUE
PUBLIC WORKS DEPARTMENT
ENGINEERING GROUP

TITLE: WESTSIDE BLVD
PERMANENT SIGNING & STRIPING

3725 | A-13-Z | 20 | 32

TRANS:CT9534314.SHEETS.PERMSIGN\PERM-NOTES.GRF

CURVE DATA

CURVE NO.	RADIUS	DELTA	TANGENT	LENGTH
1	75.00'	70°37'26"	53.13'	92.45'
2	138.00'	12°48'47"	15.49'	30.86'
3	312.00'	11°12'40"	30.62'	61.05'

POINT DATA

POINT NO.	STATION	OFFSET
1	45+69.21	36.00' RT
2	46+34.99	20.49' LT
3	47+90.06	26.00' LT
4	48+20.67	29.44' LT
5	48+81.14	37.08' LT

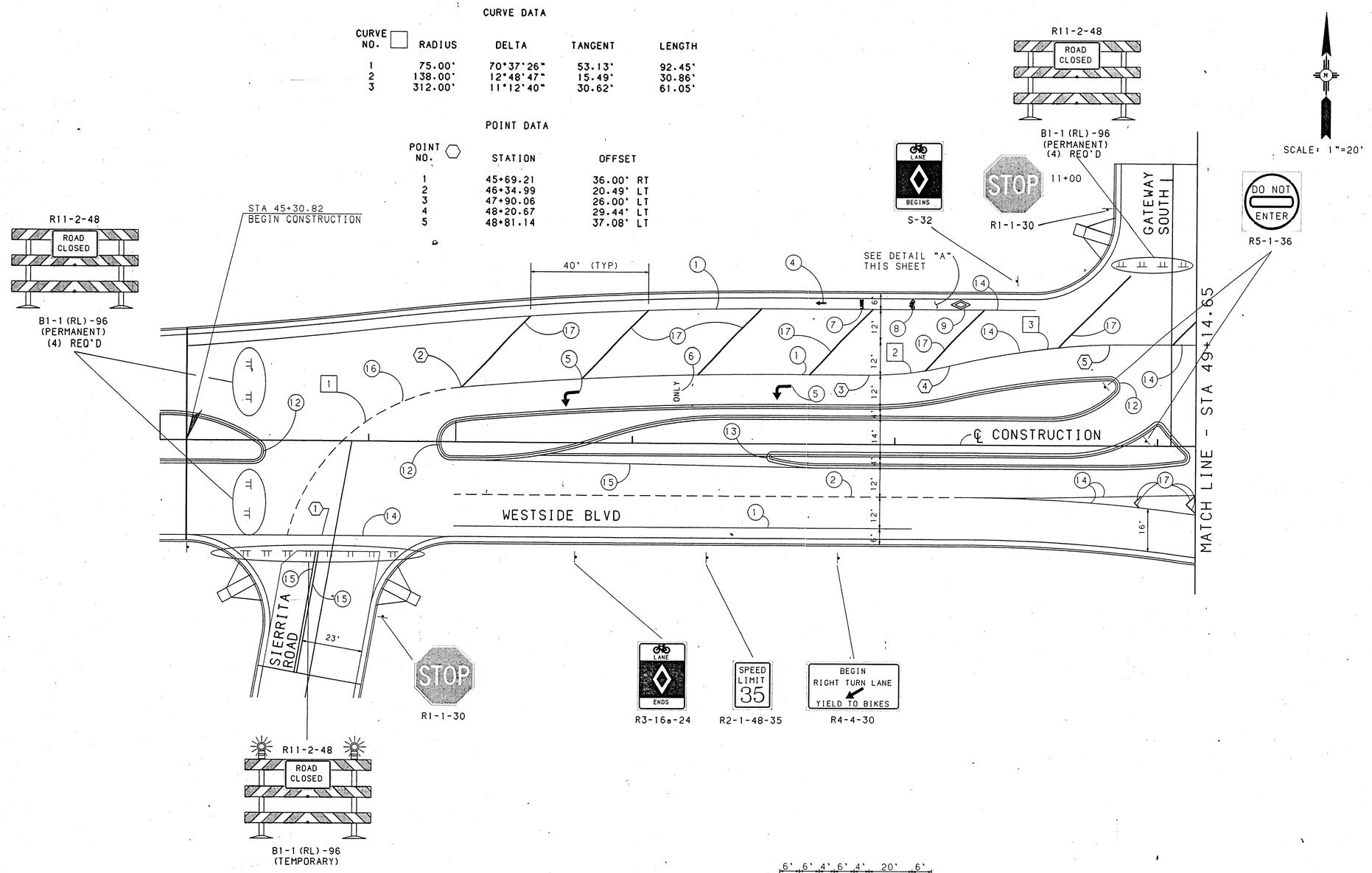

NOTE:
ALL TEMPORARY TAPE, BARRICADES, AND SIGNS TO BE REMOVED BY SUBSEQUENT PROJECTS AS APPLICABLE

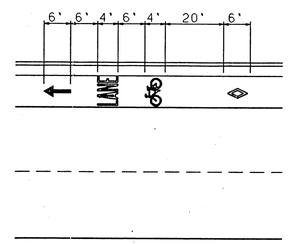

DETAIL "A" - BIKE SYMBOL SPACING

NTS

NOTES

1. TYPE I RETROREFLECTIVE PREFORMED PAVEMENT STRIPE 4" WHITE SOLID
2. TYPE I RETROREFLECTIVE PREFORMED PAVEMENT STRIPE 4" WHITE DASH (10' STRIPE 30' GAP)
3. TYPE I RETROREFLECTIVE PREFORMED PAVEMENT MARKING - RIGHT ARROW
4. TYPE I RETROREFLECTIVE PREFORMED PAVEMENT MARKING - THRU ARROW
5. TYPE I RETROREFLECTIVE PREFORMED PAVEMENT MARKING - LEFT ARROW
6. TYPE I RETROREFLECTIVE PREFORMED PAVEMENT MARKING - WORD (ONLY)
7. TYPE I RETROREFLECTIVE PREFORMED PAVEMENT MARKING - WORD (LANE)
8. TYPE I RETROREFLECTIVE PREFORMED PAVEMENT MARKING - BIKE SYMBOL
9. TYPE I RETROREFLECTIVE PREFORMED PAVEMENT MARKING - (DIAMOND)
10. NOT USED
11. NOT USED
12. PAINT MEDIAN CURB FACE YELLOW REFLECTIVE PAINT
13. PAINT MEDIAN CURB FACE WHITE REFLECTIVE PAINT
14. TEMPORARY RETROREFLECTIVE TAPE STRIPE - 4" SOLID WHITE
15. TYPE I RETROREFLECTIVE PREFORMED PAVEMENT STRIPE - 4" YELLOW SOLID
16. TYPE I RETROREFLECTIVE PREFORMED PAVEMENT STRIPE - 4" WHITE DASH (2" STRIPE, 4" GAP)
17. TEMPORARY RETROREFLECTIVE TAPE STRIPE - 8" SOLID WHITE

AS-BUILT INFORMATION
CONTRACTOR — DATE
WORK STAKED BY — DATE
INSPECTOR'S ACCEPTANCE BY — DATE
FIELD VERIFICATION BY — DATE
DRAWINGS CORRECTED BY — DATE
MICRO-FILM INFORMATION
RECORDED BY — DATE
NO.

BENCH MARKS

SURVEY INFORMATION
FIELD NOTES
NO. | BY | DATE

ENGINEER'S SEAL

NO.	DATE	REMARKS	BY
		REVISIONS	
		DESIGN	

DESIGNED BY BHI/MAH — DATE 3-96
DRAWN BY BHI/CJT — DATE 3-96
CHECKED BY BHI/MAH — DATE 3-96

BOHANNAN-HUSTON INC.
ENGINEERS • PLANNERS • PHOTOGRAMMETRISTS • SURVEYORS • LANDSCAPE ARCHITECTS
ALBUQUERQUE LAS CRUCES SANTA FE

CITY OF ALBUQUERQUE
PUBLIC WORKS DEPARTMENT
ENGINEERING GROUP

TITLE: WESTSIDE BLVD
PERMANENT SIGNING & STRIPING

3725 | A-13-Z | 21 | 32

TRANS+CT9534314.SHEETS.PERMSIGN\WEST-PERM1.GRF

CURVE DATA

CURVE NO.	RADIUS	DELTA	TANGENT	LENGTH
1	300.00'	12°50'19"	33.75'	67.22'
2	300.00'	12°50'19"	33.75'	67.22'

POINT DATA

POINT NO.	STATION	OFFSET
1	51+15.47	37.00' LT
2	51+82.03	44.50' LT
3	52+48.69	52.00' LT

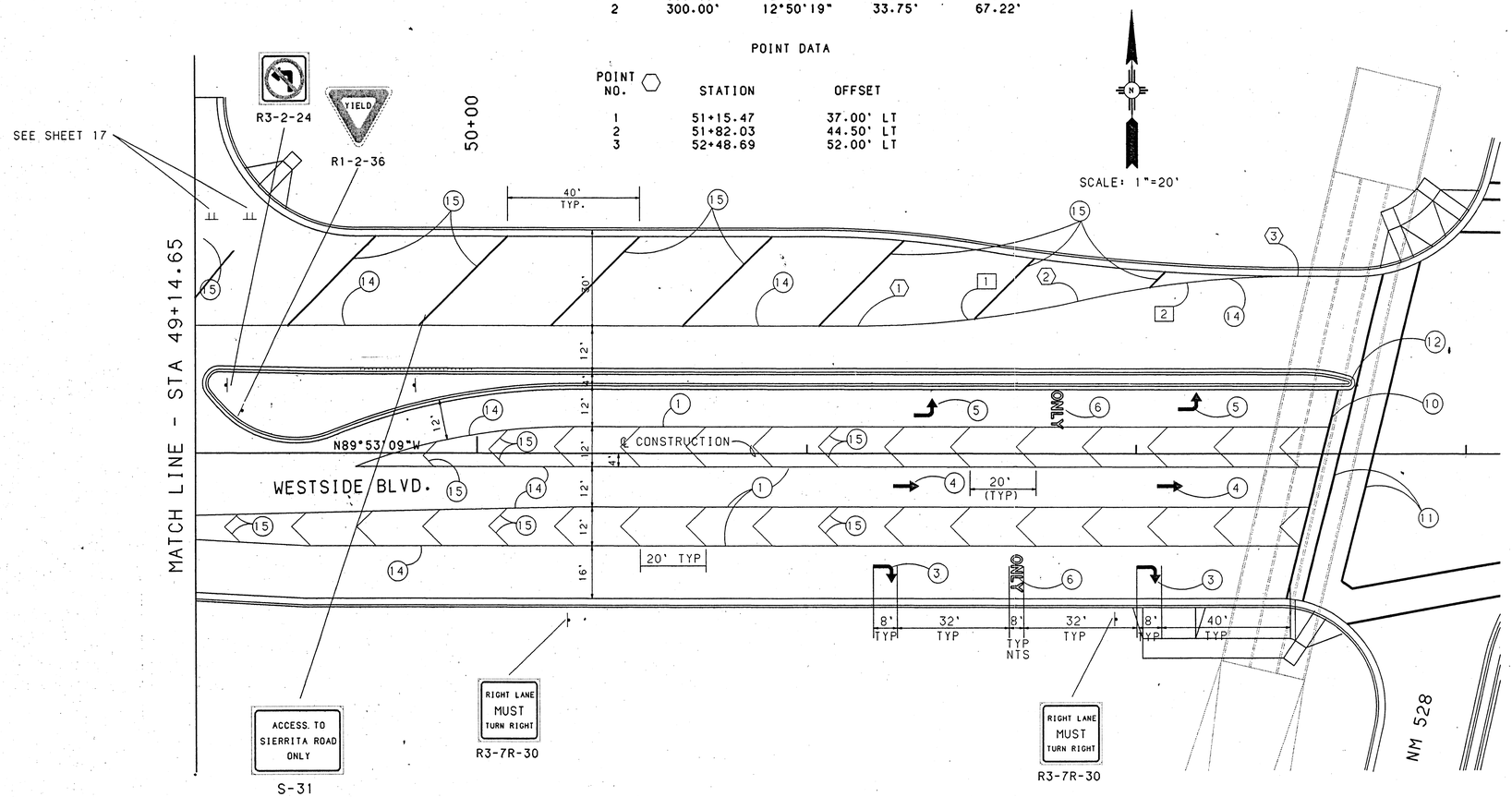

SEE SHEETS 23 & 24 FOR INTERSECTION AND EAST LEG SIGNING & STRIPING

NOTE:
ALL TEMPORARY TAPE, BARRICADES, AND SIGNS TO BE REMOVED BY SUBSEQUENT PROJECTS AS APPLICABLE

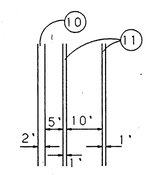

TYPICAL CROSSWALK SPACING

NTS

NOTES

1. TYPE I RETROREFLECTIVE PREFORMED PAVEMENT STRIPE 4" WHITE SOLID
2. TYPE I RETROREFLECTIVE PREFORMED PAVEMENT STRIPE 4" WHITE DASH (10' STRIPE 30' GAP)
3. TYPE I RETROREFLECTIVE PREFORMED PAVEMENT MARKING - RIGHT ARROW
4. TYPE I RETROREFLECTIVE PREFORMED PAVEMENT MARKING - THRU ARROW
5. TYPE I RETROREFLECTIVE PREFORMED PAVEMENT MARKING - LEFT ARROW
6. TYPE I RETROREFLECTIVE PREFORMED PAVEMENT MARKING - WORD (ONLY)
7. TYPE I RETROREFLECTIVE PREFORMED PAVEMENT MARKING - WORD (LANE)
8. TYPE I RETROREFLECTIVE PREFORMED PAVEMENT MARKING - BIKE SYMBOL
9. TYPE I RETROREFLECTIVE PREFORMED PAVEMENT MARKING - (DIAMOND)
10. TYPE I RETROREFLECTIVE PREFORMED PAVEMENT STRIPE 24" WHITE SOLID
11. TYPE I RETROREFLECTIVE PREFORMED PAVEMENT STRIPE 12" WHITE SOLID
12. PAINT MEDIAN CURB FACE YELLOW REFLECTIVE PAINT
13. PAINT MEDIAN CURB FACE WHITE REFLECTIVE PAINT
14. TEMPORARY RETROREFLECTIVE TAPE STRIPE - 4" SOLID WHITE
15. TEMPORARY RETROREFLECTIVE TAPE STRIPE - 8" SOLID WHITE

AS-BUILT INFORMATION
CONTRACTOR — DATE
STAKED BY — DATE
INSPECTOR'S INSPECTED BY — DATE
FIELD VERIFICATION BY — DATE
DRAWINGS CORRECTED BY — DATE

BENCH MARKS

MICRO-FILM INFORMATION
RECORDED BY — DATE
NO.

SURVEY INFORMATION
FIELD NOTES

NO.	BY	DATE

ENGINEER'S SEAL

NO.	DATE	REMARKS	BY

REVISIONS

DESIGN		
DESIGNED BY BHI/MAH	DATE 3-96	
DRAWN BY BHI/CJT	DATE 3-96	
CHECKED BY BHI/MAH	DATE 3-96	

BOHANNAN-HUSTON INC.
ENGINEERS • PLANNERS • PHOTOGRAMMETRISTS • SURVEYORS • LANDSCAPE ARCHITECTS
ALBUQUERQUE LAS CRUCES SANTA FE

CITY OF ALBUQUERQUE
PUBLIC WORKS DEPARTMENT
ENGINEERING GROUP

TITLE: WESTSIDE BLVD
PERMANENT SIGNING & STRIPING

3725	A-13-Z	22	32

TRANS+CT95534314.SHEETS.PERMSIGN\WEST-PERM2.GRF

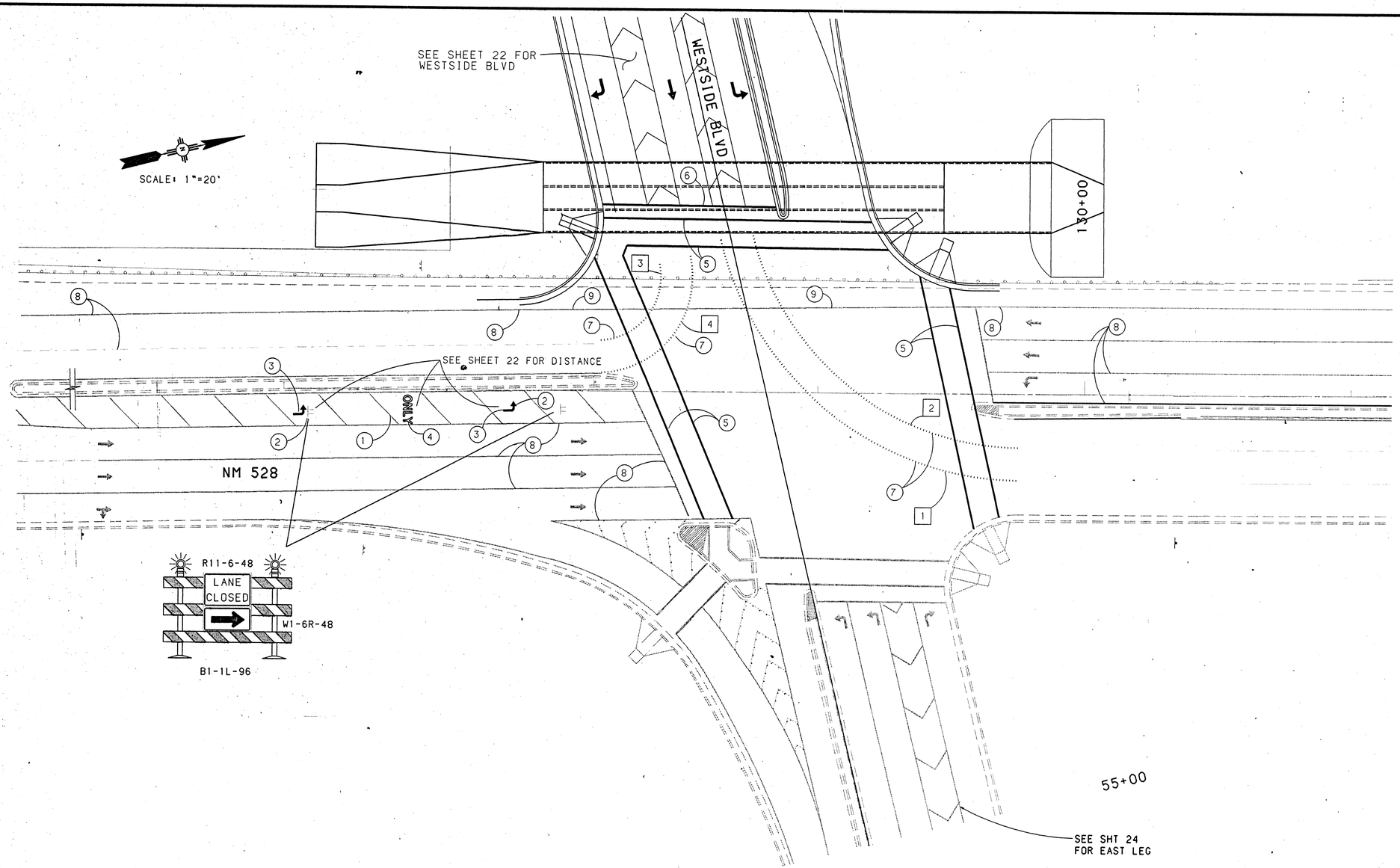

NOTES

1. REMOVE EXISTING REMOVABLE MARKING TAPE
2. REMOVE EXISTING BARRICADE
3. TYPE I RETROREFLECTIVE PREFORMED PAVEMENT MARKING - LEFT ARROW
4. TYPE I RETROREFLECTIVE PREFORMED PAVEMENT MARKING - WORD (ONLY)
5. TYPE I RETROREFLECTIVE PREFORMED PAVEMENT STRIPE - 12" WHITE SOLID
6. TYPE I RETROREFLECTIVE PREFORMED PAVEMENT STRIPE - 24" WHITE SOLID
7. FUTURE TYPE I RETRO-REFLECTIVE PREFORMED PAVEMENT STRIPE - 4" WHITE DASH (2' STRIPE, 4' GAP)
8. EXISTING STRIPES TO REMAIN
9. REMOVE EXISTING STRIPE

CURVE DATA - WESTSIDE BLVD PAVEMENT STRIPE

CURVE NO	DELTA	TANGENT	LENGTH	RADIUS
1	76°26'49"	91.36'	154.77'	116.00'
2	76°26'49"	81.91'	138.76'	104.00'
3	102°14'56"	29.77'	42.83'	24.00'
4	102°14'56"	44.65'	64.24'	36.00'

AS-BUILT INFORMATION
CONTRACTOR — DATE
WORK STAKED BY — DATE
INSPECTOR'S ACCEPTANCE BY — DATE
VERIFICATION BY — DATE
COMPUTED BY — DATE
MICRO-FILM INFORMATION
RECORDED BY — DATE
NO.

BENCH MARKS

SURVEY INFORMATION
FIELD NOTES
NO. | BY | DATE

ENGINEER'S SEAL
FRED F. GREEN JR. 10146 REGISTERED PROFESSIONAL ENGINEER STATE OF NEW MEXICO
1-12-96

NO.	DATE	REMARKS	BY
		REVISIONS	
		DESIGN	

DESIGNED BY BHI/MAH — DATE 1-96
DRAWN BY BHI/CJT — DATE 1-96
CHECKED BY BHI/MAH — DATE 1-96

BOHANNAN-HUSTON INC.
ENGINEERS • PLANNERS • PHOTOGRAMMETRISTS • SURVEYORS • LANDSCAPE ARCHITECTS
ALBUQUERQUE LAS CRUCES SANTA FE

CITY OF ALBUQUERQUE
PUBLIC WORKS DEPARTMENT
ENGINEERING GROUP

TITLE: WESTSIDE BLVD
PERMANENT SIGNING & STRIPING

3725 | A-13-Z | 23 | 32

TRANS*CT9534314.SHEETS.PERMSIGN\WEST-PERM3.GRF

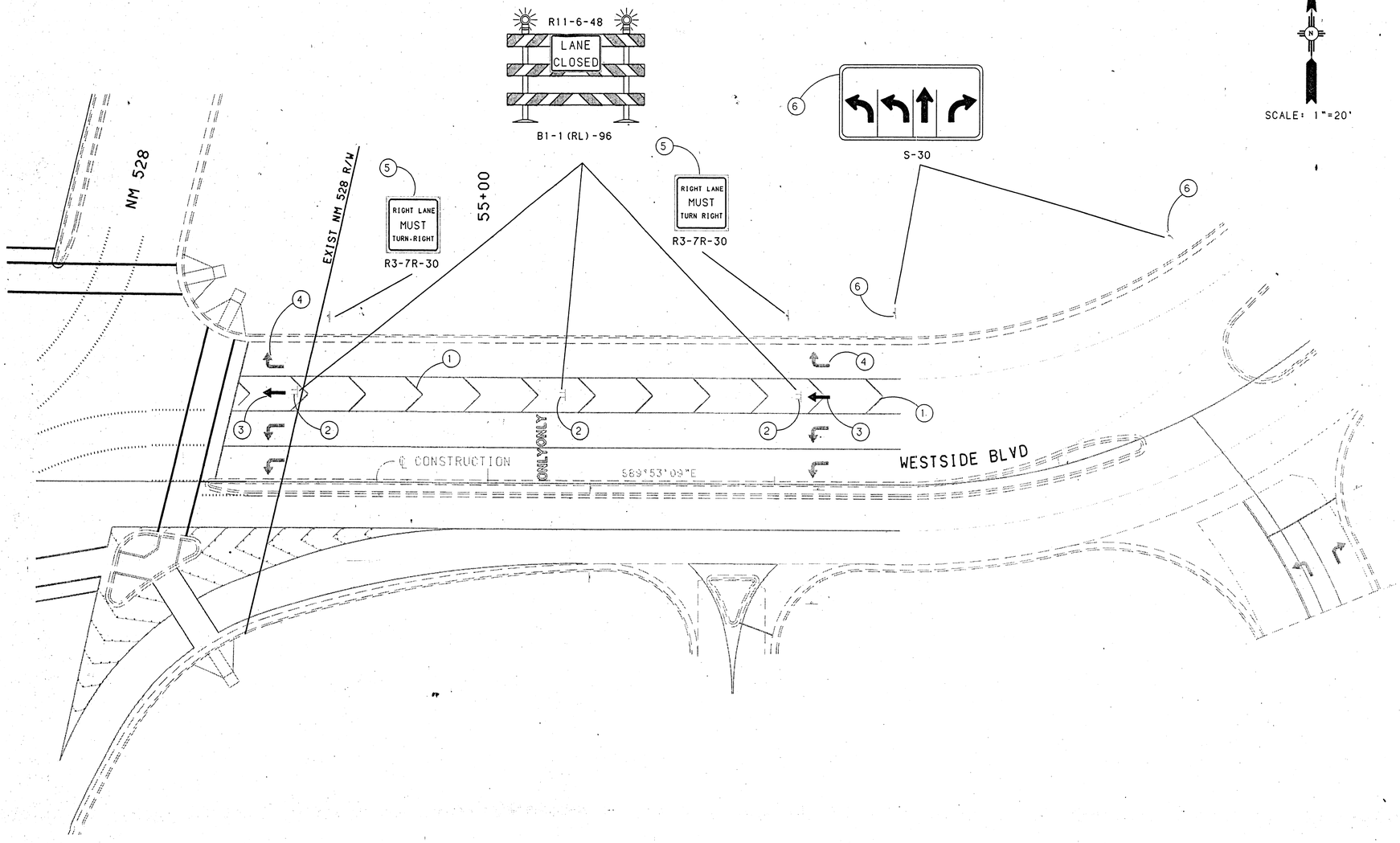

NOTES

1. REMOVE EXISTING REMOVABLE MARKING TAPE
2. REMOVE EXISTING BARRICADE
3. TYPE I RETROREFLECTIVE PREFORMED PAVEMENT MARKING - THRU ARROW
4. EXISTING RIGHT ARROW TO REMAIN
5. EXISTING SIGN TO REMAIN
6. EXISTING SIGN TO BE REMOVED AND REPLACED W/ S-30

AS-BUILT INFORMATION

	DATE
CONTRACTOR	
WORK STAKED BY	
INSPECTOR'S ACCEPTANCE BY	
FIELD VERIFICATION BY	
DRAWINGS CORRECTED BY	

MICRO-FILM INFORMATION

RECORDED BY	DATE
NO.	

BENCH MARKS

SURVEY INFORMATION

FIELD NOTES

NO.	BY	DATE

ENGINEER'S SEAL

NO.	DATE	REMARKS	BY
		REVISIONS	

DESIGN

DESIGNED BY BHI/MAH	DATE 1-96
DRAWN BY BHI/CJT	DATE 1-96
CHECKED BY BHI/MAH	DATE 1-96

BOHANNAN-HUSTON INC.
ENGINEERS • PLANNERS • PHOTOGRAMMETRISTS • SURVEYORS • LANDSCAPE ARCHITECTS
ALBUQUERQUE LAS CRUCES SANTA FE

CITY OF ALBUQUERQUE
PUBLIC WORKS DEPARTMENT
ENGINEERING GROUP

TITLE: WESTSIDE BLVD
PERMANENT SIGNING & STRIPING

3725	A-13-Z	24	32

TRANS•CT9534314.SHEETS.PERMSIGN.WEST-PERM4.GRF

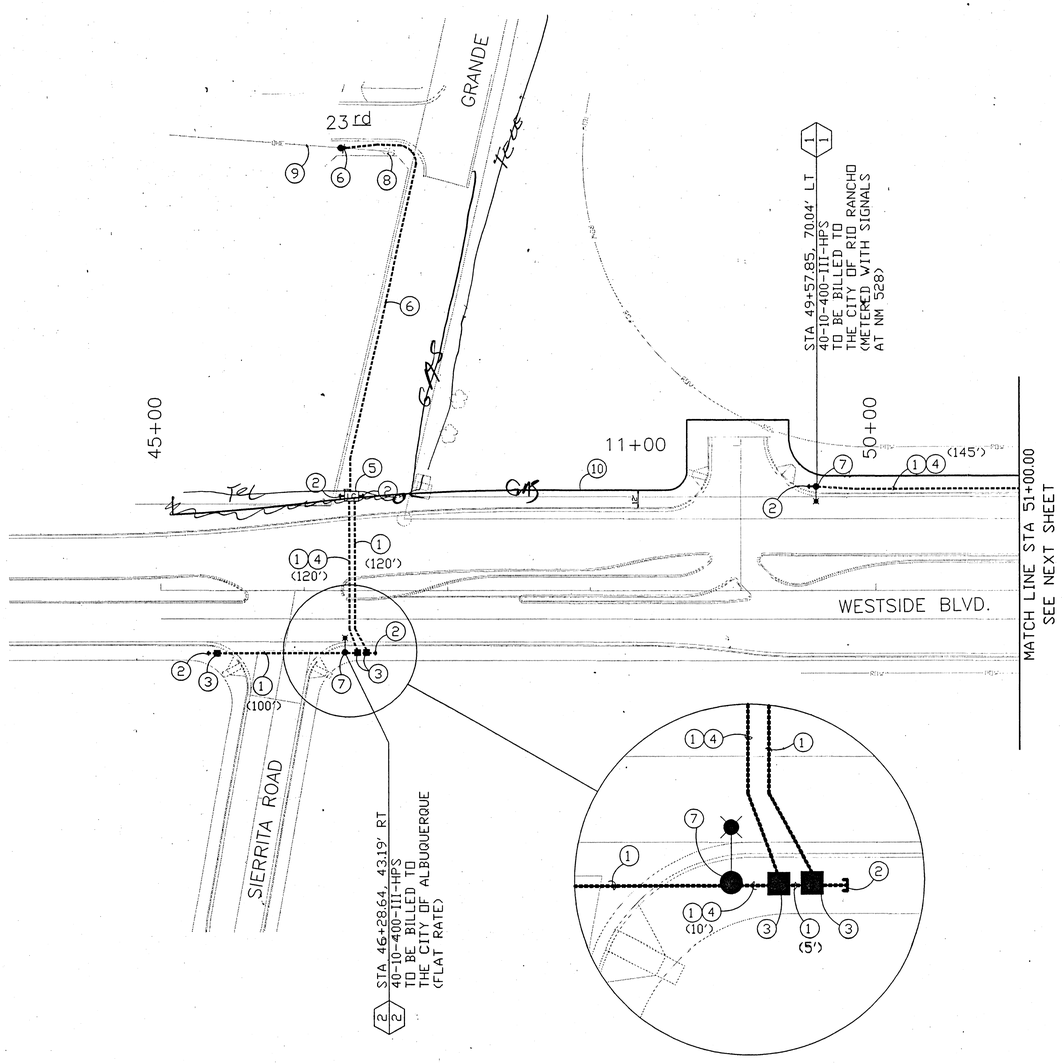

KEYED NOTES

1. INSTALL RIGID ELECTRICAL CONDUIT - 2" INCLUDING TRENCH, BACKFILL, PATCHING, PUSHING, BORING AND JACKING.
2. INSTALL 10' RIGID ELECTRICAL CONDUIT - 2" STUBOUT WITH CAP
3. INSTALL ELECTRICAL PULL BOX (STANDARD)
4. PULL 2 EACH - SINGLE CONDUCTOR WIRES #2 AWG AND 1 EACH BARE COPPER #8 AWG
5. INSTALL LIGHITNG CONTROL CABINET, 6 CIRCUIT UNMETERED
6. PNM TO INSTALL SERVICE POLE WITH RISER, IN LINE WITH EXISTING POWER LINE, TRANSFORMER AND UNDERGROUND SERVICE TO LIGHTING CONTROL CABINET
7. INSTALL LUMINAIRE FOUNDATION FOR LUMINAIRE - 40' AND LESS. INSTALL STREET LIGHT STANDARD, SINGLE ARM, 40 FT (TYPE V, DAVIT). INSTALL ROADWAY LUMINAIRE, TYPE 400S, TYPE III CUTOFF, FLAT GLASS
8. EXISTING POWER POLE TO REMAIN
9. EXISTING POWER LINE TO REMAIN
10. 4" MP GAS LINE (NEW LOCATION)

LIGHTING LEGEND

NEW	EXISTING	ITEM
		LIGHTING STANDARD WITH LUMINAIRE AS INDICATED
		CONDUIT RUN
		PULL BOX
		SERVICE POLE WITH SERVICE RISER
LC	LC	LIGHTING CONTROL CABINET

LUMINAIRE NUMBER
STATIONING
CIRCUIT NUMBER
00-00-000-0-0
TYPE OF LAMP
TYPE OF DISTRIBUTION
WATTAGE
ARM LENGTH
MOUNTING HEIGHT

N

0 25 50 100
SCALE: 1" = 50'

AS-BUILT INFORMATION
CONTRACTOR DATE
WORK STAKED BY DATE
INSPECTOR'S ACCEPTANCE BY DATE
FIELD VERIFICATION BY DATE
DRAWINGS CORRECTED BY DATE
MICRO-FILM INFORMATION
RECORDED BY DATE
NO.

BENCH MARKS

SURVEY INFORMATION
FIELD NOTES
NO. BY DATE

ENGINEER'S SEAL
KEN W. TRASK III
NEW MEXICO 8876
REGISTERED PROFESSIONAL ENGINEER
8-22-96

NO.	DATE	REMARKS	BY
		REVISIONS	
		DESIGN	

DESIGNED BY CWT DATE 8-96
DRAWN BY ARB DATE 8-96
CHECKED BY CWT DATE 8-96

BOHANNAN-HUSTON INC.
ENGINEERS • PLANNERS • PHOTOGRAMMETRISTS • SURVEYORS • LANDSCAPE • ARCHITECTS
ALBUQUERQUE LAS CRUCES SANTA FE

CITY OF ALBUQUERQUE
PUBLIC WORKS DEPARTMENT
ENGINEERING DEVELOPMENT GROUP

TITLE: WESTSIDE & NM 528
LIGHTING PLAN

DESIGN REVIEW COMMITTEE	CITY ENGINEER APPROVAL	LAST DESIGN UPDATE	MO./DAY/YR.	MO./DAY/YR.

CITY PROJECT NO.	ZONE MAP NO.	SHEET	OF
3750	A-13-Z	25	32

TRANS:[T95343A32222.SHEETS.LIGHTING]LIGHT_1.DWG 8/19/96

EXISTING TRAFFIC SIGNAL CONFIGURATION BY APPROACH

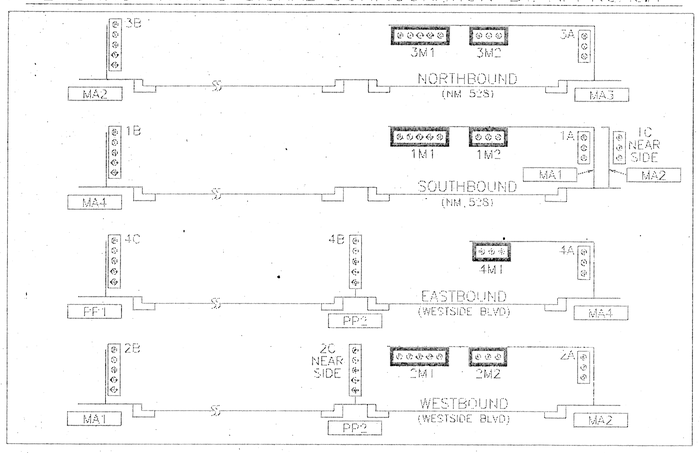

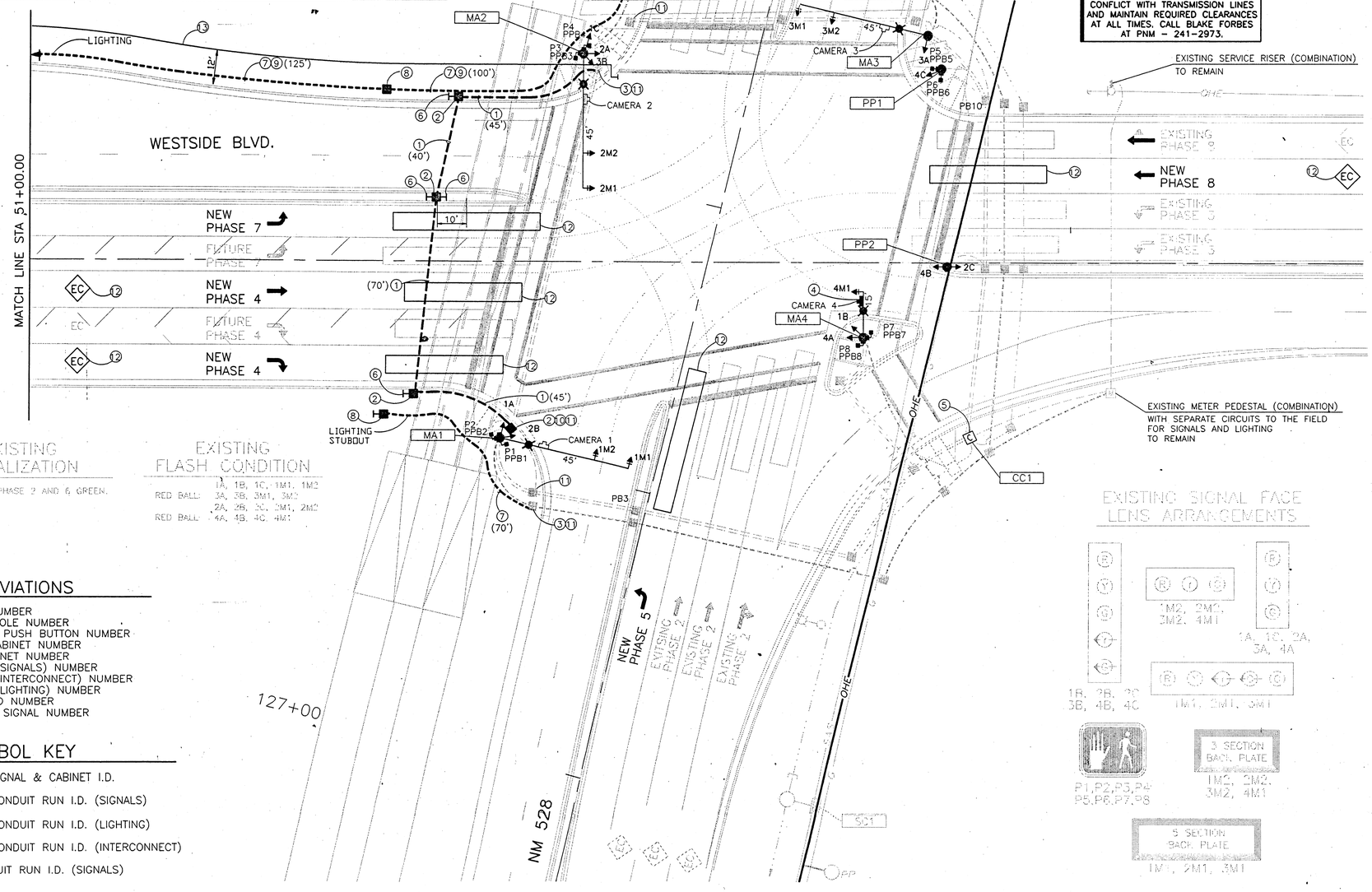

CAUTION!!
CONTRACTOR MUST COORDINATE CONSTRUCTION WITH PNM TO AVOID CONFLICT WITH TRANSMISSION LINES AND MAINTAIN REQUIRED CLEARANCES AT ALL TIMES. CALL BLAKE FORBES AT PNM – 241-2973.

SIGNAL PHASING

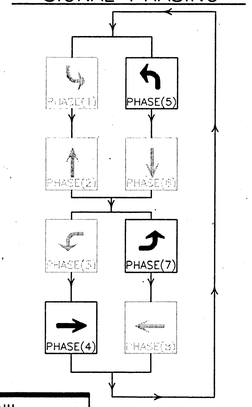

KEYED NOTES

1. INSTALL NEW RIGID ELECTRICAL CONDUIT – 3" DIAMETER WITH PULL STRING FOR SIGNALS, INCLUDING TRENCH, BACKFILL, PATCHING, PUSHING, BORING AND JACKING.
2. INSTALL NEW ELECTRICAL PULL BOX, LARGE SIZE FOR SIGNALS
3. CONNECT NEW RIGID ELECTRICAL CONDUIT TO EXISTING PULL BOX
4. INSTALL VIDEO CAMERA (CAMERA TO BE FURNISHED BY THE CITY OF RIO RANCHO)
5. CITY OF RIO RANCHO AND ARCAN TRAFFIC CONTROL SYSTEMS TO ADJUST CONTROLLER AND VIDEO SYSTEM FOR NEW PHASING
6. INSTALL NEW RIGID ELECTRICAL CONDUIT – 3" DIAMETER STUB-OUTS (5')
7. INSTALL NEW RIGID ELECTRICAL CONDUIT – 2" DIAMETER FOR LIGHTING INCLUDING TRENCH, BACKFILL, PATCHING, PUSHING, BORING AND JACKING
8. INSTALL NEW ELECTRICAL PULL BOX STANDARD SIZE, FOR LIGHTING
9. PULL 2 EACH SINGLE CONDUCTOR WIRES #2 AWG AND 1 EACH BARE COPPER #8 AWG
10. EXISTING PULL BOX WAS LOST DUE TO CHANNEL EROSION. EXCAVATE AND LOCATE EXISTING CONDUITS AND CABLES. REMOVE EXISTING WIRE, REPAIR AND RECONNECT CONDUITS TO NEW PULL BOX, AND REPULL EXISTING WIRE AS NECESSARY, REPLACE ANY DAMAGED WIRE
11. ADJUST EXISTING PULL BOX TO GRADE
12. THEORETICAL DETECTION ZONES TO BE PROGRAMMED INTO EXISTING MACHINE VISION VEHICLE DETECTION SYSTEM (SIZE AND SHAPE MAY VARY)
13. 4" MP GAS LINE (NEW LOCATION)

NOTES

1. THE CONTRACTOR SHALL COORDINATE SIGNAL MODIFICATIONS WITH THE CITY OF RIO RANCHO PUBLIC WORKS DEPARTMENT.(891-7208)
2. THIS INTERSECTION HAS AN EXISTING PEEK VISION VIDEO TRAK-900 MACHINE VISION DETECTION SYSTEM. THE CONTRACTOR SHALL HAVE A FACTORY REPRESENTATIVE (ARCAN TRAFFIC SYSTEMS, 602-921-2606) ASSIST WITH INSTALLING THE EAST BOUND CAMERA (#4), AND UPDATE THE PROGRAMMING TO INCLUDE ALL NEW TRAFFIC MOVEMENTS
3. REPLACEMENT OF DAMAGED CONDUIT AND WIRE CAUSED BY CHANNEL EROSION WILL BE CONSIDERED INCIDENTAL TO CONSTRUCTION
4. BREAKAWAY COUPLINGS ARE REQUIRED

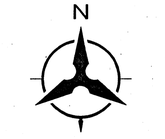

0 10 20 40
SCALE: 1" = 20'

EXISTING INITIALIZATION

ALL RED, THEN PHASE 2 AND 6 GREEN.

EXISTING FLASH CONDITION

	1A, 1B, 1C, 1M1, 1M2
RED BALL:	3A, 3B, 3M1, 3M2
	2A, 2B, 2C, 2M1, 2M2
RED BALL:	4A, 4B, 4C, 4M1

EXISTING SIGNAL FACE LENS ARRANGEMENTS

ABBREVIATIONS

MA1	MASTARM NUMBER
PP1	PEDESTAL POLE NUMBER
PPB1	PEDESTRIAN PUSH BUTTON NUMBER
CC1	CONTROL CABINET NUMBER
SC1	SPLICE CABINET NUMBER
PB1	PULL BOX (SIGNALS) NUMBER
PBC1	PULL BOX (INTERCONNECT) NUMBER
PBL1	PULL BOX (LIGHTING) NUMBER
1A	SIGNAL HEAD NUMBER
P1	PEDESTRIAN SIGNAL NUMBER

SYMBOL KEY

MA1	EXISTING SIGNAL & CABINET I.D.
1	EXISTING CONDUIT RUN I.D. (SIGNALS)
L1	EXISTING CONDUIT RUN I.D. (LIGHTING)
C1	EXISTING CONDUIT RUN I.D. (INTERCONNECT)
1	NEW CONDUIT RUN I.D. (SIGNALS)

AS-BUILT INFORMATION
CONTRACTOR / WORK STAKED BY / INSPECTOR'S ACCEPTANCE BY / FIELD VERIFICATION BY / DRAWINGS CORRECTED BY — DATE
MICRO-FILM INFORMATION
RECORDED BY / DATE / NO.

BENCH MARKS

SURVEY INFORMATION
FIELD NOTES
NO. / BY / DATE

ENGINEER'S SEAL
CHARLES W. TRASK
NEW MEXICO 6870 PROFESSIONAL ENGINEER
8-19-96

NO.	DATE	REMARKS	BY
		REVISIONS	
		DESIGN	

DESIGNED BY CWT DATE 8-96
DRAWN BY ARB DATE 8-96
CHECKED BY CWT DATE 8-96

BOHANNAN-HUSTON INC.
ENGINEERS • PLANNERS • PHOTOGRAMMETRISTS • SURVEYORS • LANDSCAPE • ARCHITECTS
ALBUQUERQUE LAS CRUCES SANTA FE

CITY OF ALBUQUERQUE
PUBLIC WORKS DEPARTMENT
ENGINEERING DEVELOPMENT GROUP

TITLE: WESTSIDE BOULEVARD & NM 528 TRAFFIC SIGNAL & LIGHTING PLAN

DESIGN REVIEW COMMITTEE	CITY ENGINEER APPROVAL	LAST DESIGN UPDATE	MO./DAY/YR.	MO./DAY/YR.

CITY PROJECT NO.	ZONE MAP NO.	SHEET	OF
3725	A-13-Z	26	32

TRANS:[T95343A32222.SHEETS.SIGNAL]WS-SIG.DWG 8/19/96

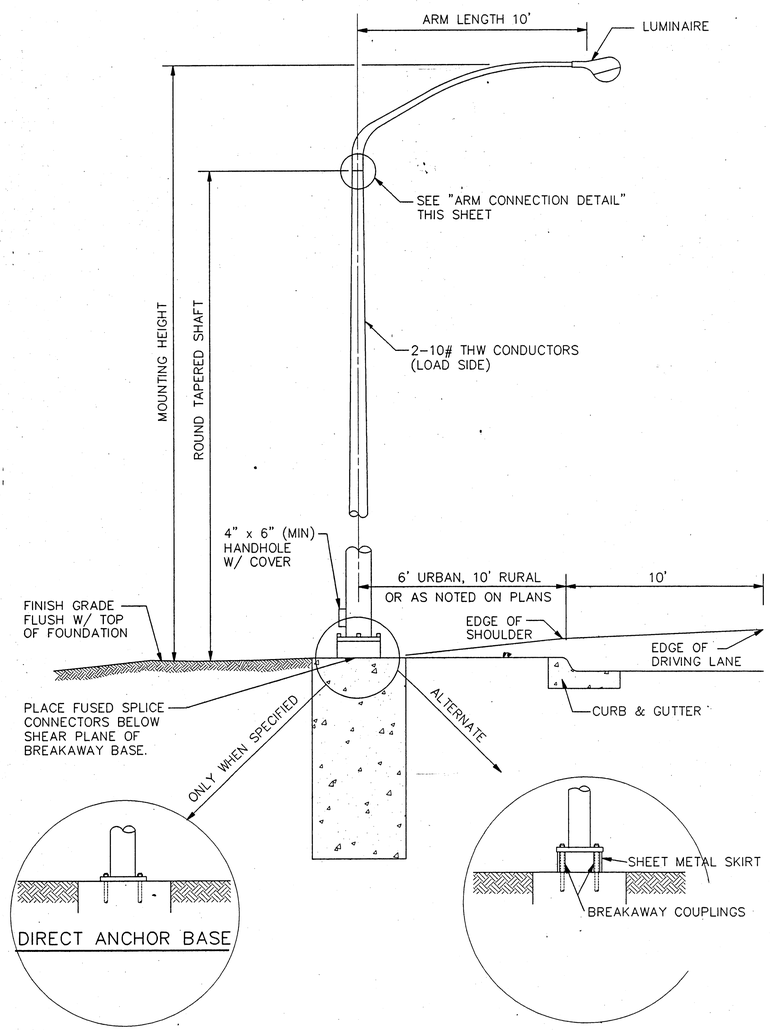

TYPE "V" STANDARD INSTALLATION

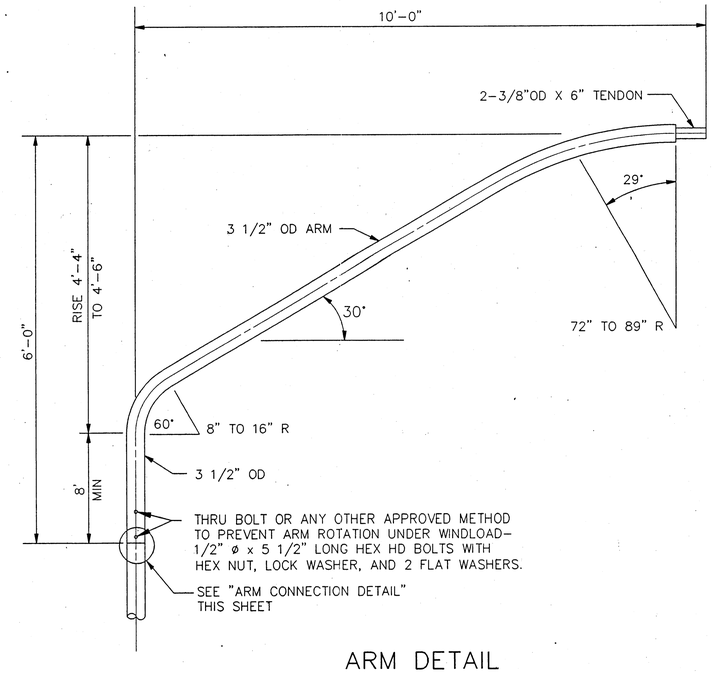

ARM DETAIL

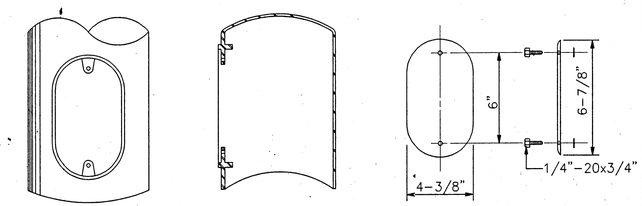

HANDHOLE REINFORCEMENT SHALL BE FORGED FROM STEEL CONFORMING TO ASTM A-576, GRADE 1021, OR SHALL BE FABRICATED FROM 3/16" WALL TUBING CONFORMING TO ASTM A-36; OR CAST FROM STEEL CONFORMING TO ASTM A-27, GRADE 65-35. OR 6" STANDARD BLACK PIPE (0-280" WALL) ASTM A-53 GRADE B.

REINFORCEMENT SHALL BE WELDED TO THE POLE SHAFT IN THE 90 DEGREE LOCATION, PRIOR TO GALVANIZING POLE SHAFT. COVER SHALL BE FABRICATED FROM 3/16" SHEET STEEL OR ALUMINUM. STEEL COVER IS GALVANIZED ACCORDING TO ASTM A-153. COVER SHALL BE EQUIPPED WITH TWO (2) AISI 304 STAINLESS STEEL 1/4" - 20 x 3/4" HEX CAP SCREW AND TWO (2) CAPTIVE WASHERS.

PROVISION FOR INTERNAL GROUNDING SHALL BE PROVIDED BY A TAPPED HOLE.

HANDHOLE REINFORCEMENT SHALL STRENGTHEN POLE SHAFT SECTION TO THAT OF A SHAFT FABRICATED WITHOUT A HANDHOLE.

HANDHOLE DETAILS

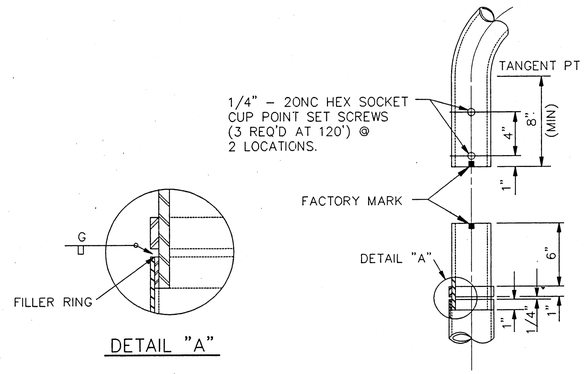

DETAIL "A"

ARM CONNECTION DETAIL

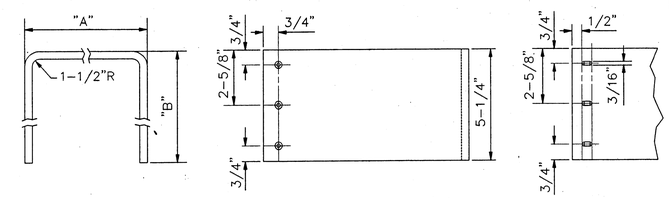

SPECIFICATION:

SKIRT COVER SHALL BE FABRICATED FROM 1/16" SHEET ALUMINUM ALLOY 3003H14. SCREWS ARE SELF TAPPING #10 x 5/8" STAINLESS STEEL.
WHEN COUPLINGS ARE SPECIFIED, EACH LIGHT POLE WILL BE FURNISHED WITH TWO (2) SKIRT COVER SECTIONS AND SIX (6) SCREWS.

INTENDED USE:

THE SKIRT COVER IS USED TO ENCLOSE VOID UNDER POLES WITH BREAKAWAY SUPPORT COUPLINGS.

SKIRT COVER DETAILS

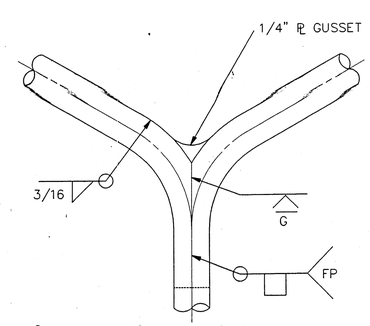

DOUBLE ARM CONNECTION DETAIL

NOTES

1. MAST ARM SHALL BE DAVIT STYLE. DIMENSIONS SHALL BE AS NOTED. ARM SHALL BE ATTACHED ON A SHAFT TENON AS DETAILED. SHAFT SHALL BE A ROUND TAPERED TUBE.
2. NUTS, BOLTS OR FASTENERS SHALL COMPLY WITH ASTM A-307 AND/OR AASHTO M-314 GRADE 55 BE EITHER ZINC PLATED, ASTM A-153 OR CADMIUM PLATED, ASTMA-165.
3. BOLT GASKET SHALL BE 22 GAUGE STAINLESS STEEL SHEET OF 18-8 SERIES (301, 302, 303, 304).
4. GROUTING SHALL BE IN ACCORDANCE TO SECTION 617 OF THE STANDARD SPECIFICATIONS.
5. ACCEPTABLE TYPE V LIGHTING STANDARDS ARE VALMONT HAPCO ALUMINUM, AND UNION METAL.
6. DETAILS SHOWN ARE FOR STEEL POLES. PRE-APPROVED ALUMINUM POLES MAY BE USED.

AS-BUILT INFORMATION
CONTRACTOR — DATE
WORK STAKED BY — DATE
INSPECTOR'S ACCEPTANCE BY — DATE
FIELD VERIFICATION BY — DATE
DRAWINGS CORRECTED BY — DATE
MICRO-FILM INFORMATION
RECORDED BY — DATE
NO.

BENCH MARKS

SURVEY INFORMATION
FIELD NOTES

NO.	BY	DATE

ENGINEER'S SEAL
CHARLES W. TRASK III
NEW MEXICO 6876 PROFESSIONAL ENGINEER
8-22-96

NO.	DATE	REMARKS
		REVISIONS
		DESIGN
		DESIGNED BY BHI\COA — DATE 8-96
		DRAWN BY BHI\COA — DATE 8-96
		CHECKED BY BHI\COA — DATE 8-96

BOHANNAN-HUSTON INC.
ENGINEERS • PLANNERS • PHOTOGRAMMETRISTS • SURVEYORS • LANDSCAPE ARCHITECTS
ALBUQUERQUE LAS CRUCES SANTA FE

CITY OF ALBUQUERQUE
PUBLIC WORKS DEPARTMENT
ENGINEERING DEVELOPMENT GROUP

STREET LIGHTING
TYPE "V" STANDARD

DESIGN REVIEW COMMITTEE	CITY ENGINEER APPROVAL	LAST DESIGN UPDATE	MO./DAY/YR.	MO./DAY/YR.

CITY PROJECT NO.	ZONE MAP NO.	SHEET	OF
3725	A-13-Z	27	32

TRANSIT95\343A32222.SHEETS.SIGNAL.J 8/19/96

ABTPVSTD.DWG

BOLT CIRCLE TABLE		
MOUNTING HEIGHT	NUMBER OF ARMS	BOLT CIRCLE
30'–35'	1 OR 2	11" OR 12"
40'	1	11" OR 12"
40'	2	14" OR 15"
50'	1	14" OR 15"
50'	2	14" OR 16"

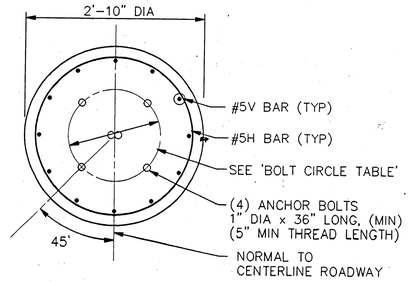

PLAN

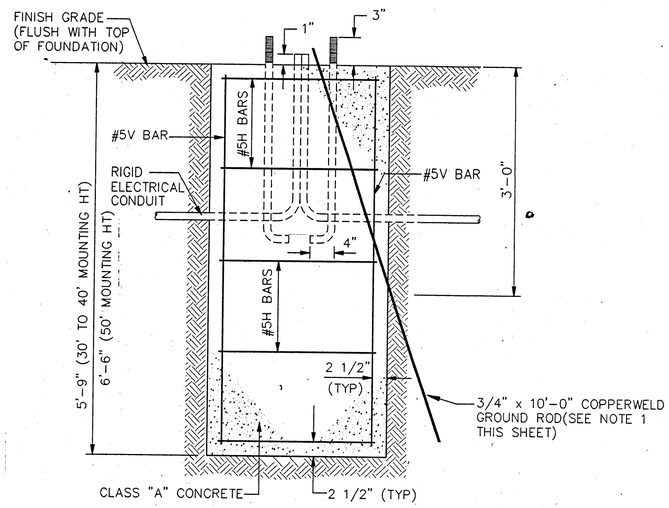

ELEVATION

FOUNDATION DETAILS

ESTIMATED FOUNDATION QUANTITIES

ITEM	30' TO 40' MOUNTING HT	50' MOUNTING HT
REINFORCING BARS, GRADE 60	92 POUNDS	139 POUNDS
PORTLAND CEMENT CONCRETE CLASS "A"	1.33 CU YDS	1.5 CU YDS

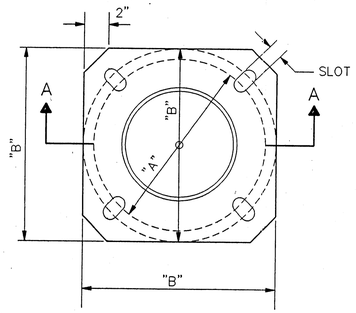

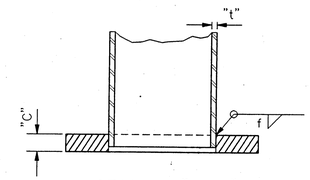

SECTION "A–A"

t. = 0.120 f. = 3/16"
t. = 0.134 f. = 3/16"
t. = 0.179 f. = 1/4"

DIMENSION TABLE					
MOUNTING HEIGHT	NUMBER OF ARMS	DIMENSIONS (INCHES)			
		A (MIN)	B (MAX)	C	SLOT
30'–35'	1 OR 2	11	16	1"	1.13" x 3.69"
40'	1 OR 2	11	16	1"	1.13" x 3.69"
50'	1 OR 2	14	16	1"	1.13" x 2.19"

ANCHOR BASE SHALL BE FABRICATED FROM PLATE STEEL CONFORMING TO ASTM A–36 AND SHALL BE WELDED TO POLE SHAFT PRIOR TO GALVANIZING SHAFT.

ANCHOR BASE DETAIL

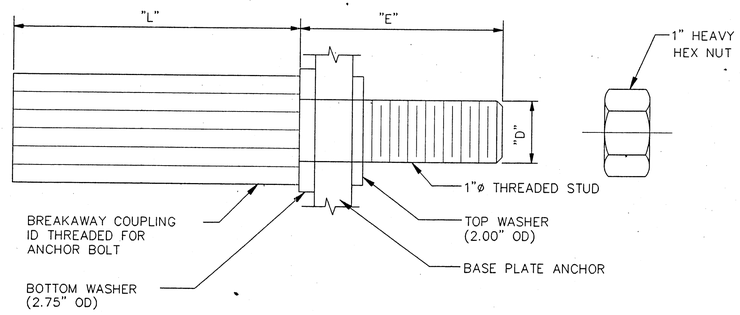

DIMENSION TABLE							
D	THREAD	MINIMUM TENSILE STRENGTH	RESTRAINED SHEAR		NUT TORQUE ± 25 FT LBS	L	E
			MIN	MAX			
1"	8 UNC	25 KIPS	30 KIPS	7.5 KIPS	175	4–3/4"	3–5/16"

BREAKAWAY SUPPORT COUPLING SHALL CONFORM TO THE REQUIREMENTS OF AASHTO STANDARDS FOR BREAKAWAY SUPPORTS.

BREAKAWAY COUPLINGS SHOULD NOT BE USED ON 50' DOUBLE ARM POLES.

COUPLING SHALL BE FABRICATED FROM EITHER DIE CAST ALUMINUM ALLOY 380 ACCORDING TO ASTM B–85, OR EXTRUDED FROM ALLOY 2024–T8511 ACCORDING TO ASTM A–153.

WASHERS SHALL BE FABRICATED FROM ASTM A–36 STEEL PLATE AND SHALL BE GALVANIZED ACCORDING TO ASTM A–153.

HEX NUTS SHALL MEET THE REQUIREMENTS OF ASTM A–563 GRADE A, AND ANSI 18.2.2 HEX TYPE AND SHALL BE GALVANIZED ACCORDING TO ASTM A–153.

THREADED STUD SHALL MEET THE REQUIREMENT OF ASTM A–675 GRADE 90 AND IS GALVANIZED WITH ASTM A–153, OR IS FABRICATED FROM AISI STAINLESS STEEL.

WHEN COUPLINGS ARE FURNISHED, EACH LIGHT POLE SHALL BE FURNISHED WITH FOUR (4) COUPLINGS AND THREADED STUDS, EIGHT (8) FLAT WASHERS, AND FOUR (4) HEX NUTS.

BREAKAWAY SUPPORT COUPLING

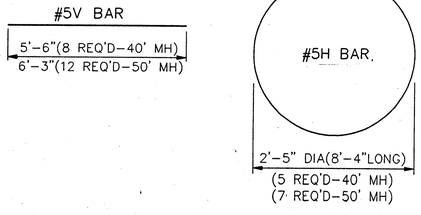

REINFORCING BARS

GENERAL NOTES:

1. ALL FOUNDATIONS SHALL INCLUDE COPPERWELD GROUND RODS AS SHOWN WHICH SHALL BE CONSIDERED INCIDENTAL TO THE COMPLETION OF THE FOUNDATION. NO PRICE OR PAYMENTS SHALL BE MADE THEREFOR.
2. WELDING SHALL BE IN ACCORDANCE WITH SECTION 1.4.2 OF AASHTO STANDARD SPECFICATIONS FOR STRUCTURAL SUPPORTS FOR HIGHWAY SIGNS, LUMINAIRES, AND TRAFFIC SIGNALS.
3. ALUMINUM STANDARDS MAY UTILIZE EITHER AN APPROVED ALUMINUM BASE OR BREAKAWAY COUPLINGS.

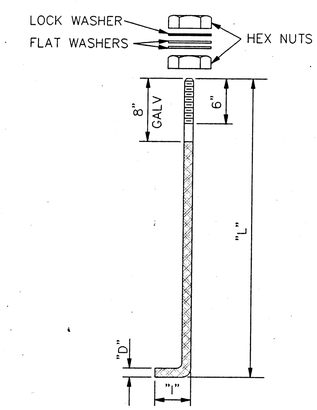

DIMENSION TABLE					
MOUNTING HEIGHT	NUMBER OF ARMS	D	L	I	UNC
30'–50'	1 OR 2	1"	36	4	8

ANCHOR BOLTS SHALL BE HOT BENT AND SHALL MEET THE REQUIREMENTS OF ASTM A–675 GRADE 90, NUTS MEET THE REQUIREMENTS OF ASTM A–563 GRADE A, AND ANSI B18.2.

FLAT WASHERS SHALL MEET THE REQUIREMENTS OF ANSI B27.2 HEAVY WASHERS.

LOCK WASHERS SHALL MEET THE REQUIREMENTS OF ANSI B18.21.1 HEAVY WASHERS.

BOLTS, NUTS AND WASHERS SHALL BE GALVANIZED IN ACCORDANCE WITH ASTM A–153.

FOUR (4) ANCHOR BOLTS, EIGHT(8) HEX NUTS, EIGHT (8) FLAT WASHERS, AND FOUR (4) LOCK WASHERS SHALL BE FURNISHED WITH EACH POLE.

NUTS, FLAT WASHERS, AND LOCK WASHERS FURNISHED FOR BREAKAWAY SUPPORTS SHALL BE SPECIFIED ON DETAILS.

ANCHOR BOLTS

AS–BUILT INFORMATION
CONTRACTOR DATE
STAKED BY DATE
INSPECTOR'S ACCEPTANCE BY DATE
FIELD ACCEPTANCE BY DATE
CORRECTED BY DATE
MICRO–FILM INFORMATION
RECORDED BY DATE
NO.

BENCH MARKS

SURVEY INFORMATION
FIELD NOTES
NO. BY DATE

ENGINEER'S SEAL
NEW MEXICO REGISTERED PROFESSIONAL ENGINEER CHARLES W. TRASK 6876
8-22-96

NO.	DATE	REMARKS	BY
		REVISIONS	
		DESIGN	
		DESIGNED BY BHI\COA	DATE 8–96
		DRAWN BY BHI\COA	DATE 8–96
		CHECKED BY BHI\COA	DATE 8–96

BOHANNAN-HUSTON INC.
ENGINEERS • PLANNERS • PHOTOGRAMMETRISTS • SURVEYORS • LANDSCAPE • ARCHITECTS
ALBUQUERQUE LAS CRUCES SANTA FE

CITY OF ALBUQUERQUE
PUBLIC WORKS DEPARTMENT
ENGINEERING DEVELOPMENT GROUP

STREET LIGHTING
FOUNDATION & BASE DETAILS

DESIGN REVIEW COMMITTEE	CITY ENGINEER APPROVAL	LAST DESIGN UPDATE	MO./DAY/YR.	MO./DAY/YR.

CITY PROJECT NO.	ZONE MAP NO.	SHEET	OF
3725	A–13–Z	28	32

TRANS:\STANDARDS.TEMP_DWG\TPVFND.DWG 8\19\96

ABTPVFND.DWG

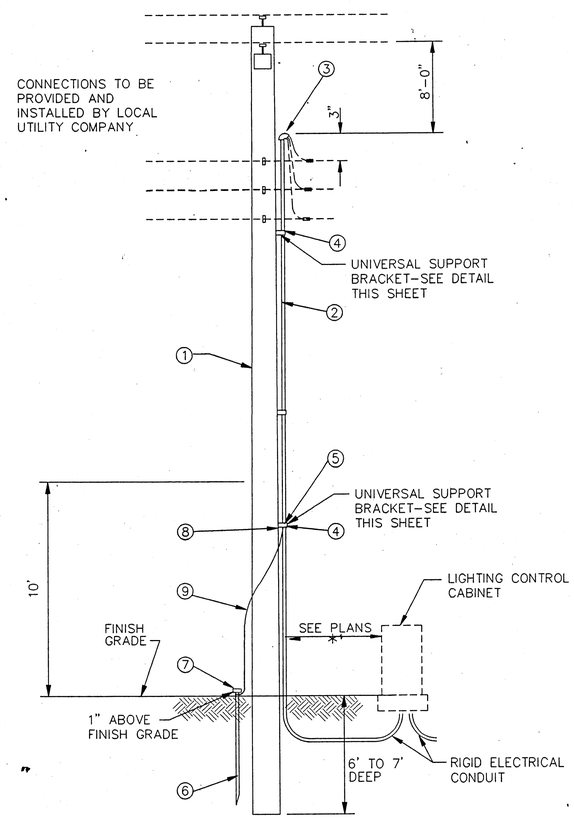

MATERIAL LIST

1	1	EXISTING POLE
2	40'	2" GALVANIZED CONDUIT
3	1	2" WEATHER HEAD
4	2	UNIVERSAL SUPPORT BRACKET
5	2	2" PIPE STRAP KIT
6	1	COPPERWELD 3/4"x10'-0" GROUND ROD
7	1	GROUND ROD CLAMP
8	1	GROUND LUG
9	10'	#6 BARE COPPER GROUND WIRE
	50'	I/C #2 THW BLACK
	50'	I/C #2 THW WHITE
	50'	I/C #2 THW RED

SERVICE RISER (LIGHTING)

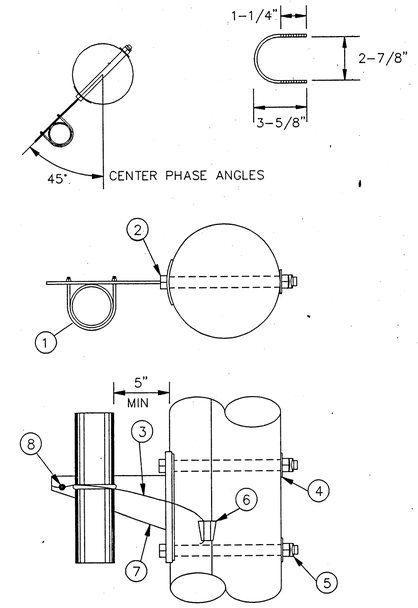

MATERIAL LIST

1	1	U BOLT
2	2	5/8" MACHINE BOLTS
3	3'	#4 SOLID COPPER WIRE
4	2	2-1/4" SQUARE WASHER
5	2	5/8" MF LOCKNUT
6	1	LINE TAP
7	1	SUPPORT BRACKET
8	1	GROUNDING LUG

UNIVERSAL SUPPORT BRACKETS NOTES:

1. BRACKET TO BE FASTENED TO POLE WITH 5/8" GALVANIZED MACHINE BOLTS.
2. BRACKET SUITABLE FOR TWO 2" CONDUITS.
3. TWO HOLE STRAPS ATTACHED AT 30" INTERVALS WITH 2" LAG SCREWS MAY BE USED INSTEAD OF THE SUPPORT BRACKET WHEN THE CONDUIT IS 1" OR LESS. A MAXIMUM OF TWO CONDUITS MAY BE STRAPPED DIRECTLY TO THE POLE.

UNIVERSAL SUPPORT BRACKETS

LIGHTING ELECTRICAL SERVICE NOTES

1. ALL SERVICE DETAILS, MATERIALS, & INSTALLATION SHALL CONFORM TO THE LOCAL POWER COMPANY REQUIREMENTS.
2. CONTACT LOCAL POWER COMPANY CUSTOMER SERVICES FOR POLE QUADRANT FOR RISERS.
3. ALL ABOVE GRADE CONDUIT SHALL BE GALVANIZED.
4. RISER BRACKET ASSEMBLY MUST BE GROUNDED PER LOCAL POWER COMPANY REQUIREMENTS.

FOR INFORMATION ONLY

SERVICE RISER, POLE, AND UNDERGROUND LINE TO LIGHTING CONTROL CABINET TO BE INSTALLED BY PUBLIC SERVICE COMPANY OF NEW MEXICO

AS-BUILT INFORMATION
CONTRACTOR | DATE
WORK STAKED BY | DATE
INSPECTOR'S ACCEPTANCE BY | DATE
FIELD VERIFICATION BY | DATE
DRAWINGS CORRECTED BY | DATE
MICRO-FILM INFORMATION
RECORDED BY | DATE
NO.

BENCH MARKS

SURVEY INFORMATION
FIELD NOTES
NO. | BY | DATE

ENGINEER'S SEAL
CHARLES W. TRASK III
NEW MEXICO
6876
REGISTERED PROFESSIONAL ENGINEER
8-22-96

NO.	DATE	REMARKS	BY
		REVISIONS	
		DESIGN	
		DESIGNED BY BHI\COA	DATE 8-96
		DRAWN BY BHI\COA	DATE 8-96
		CHECKED BY BHI\COA	DATE 8-96

BOHANNAN-HUSTON INC.
ENGINEERS • PLANNERS • PHOTOGRAMMETRISTS • SURVEYORS • LANDSCAPE • ARCHITECTS
ALBUQUERQUE LAS CRUCES SANTA FE

CITY OF ALBUQUERQUE
PUBLIC WORKS DEPARTMENT
ENGINEERING DEVELOPMENT GROUP

STREET LIGHTING
ELECTRICAL SERVICE DETAILS

DESIGN REVIEW COMMITTEE	CITY ENGINEER APPROVAL	LAST DESIGN UPDATE	MO./DAY/YR.	MO./DAY/YR.

CITY PROJECT NO.	ZONE MAP NO.	SHEET	OF
3725	A-13-Z	29	32

TRANS:[T95343A32222.SHEETS.SIGNAL] 8/19/96
ABLTSRV.DWG

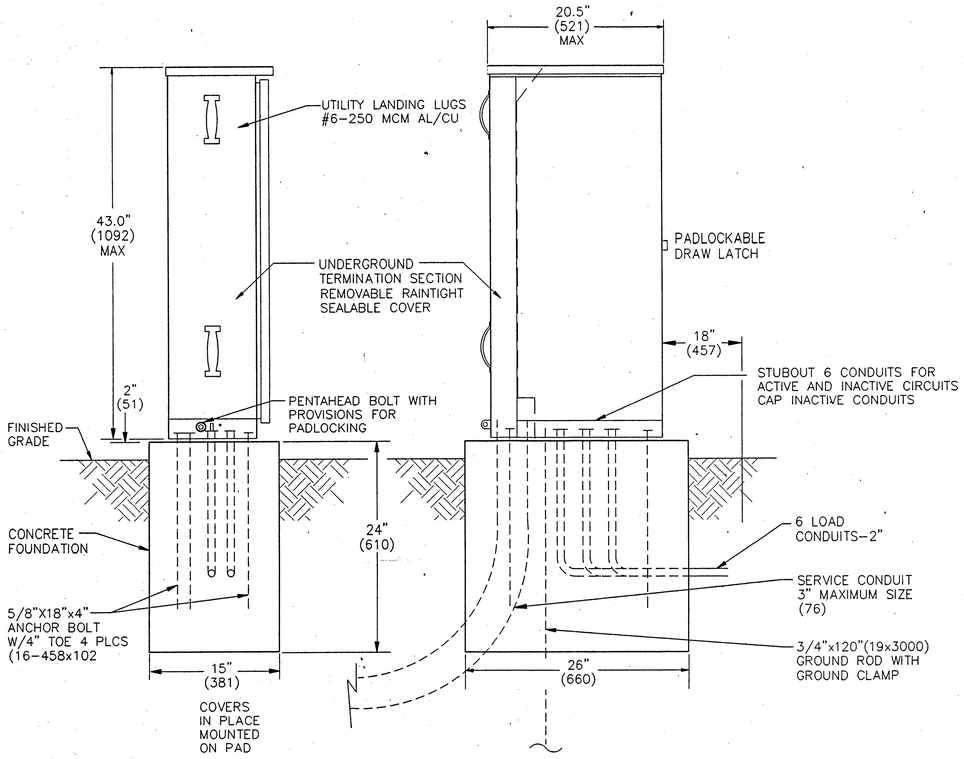

LEFT SIDE

FRONT VIEW

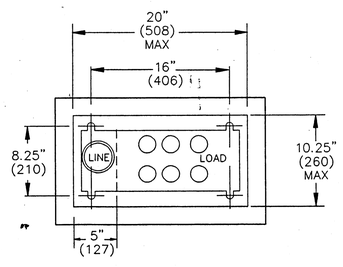

BASE PLAN

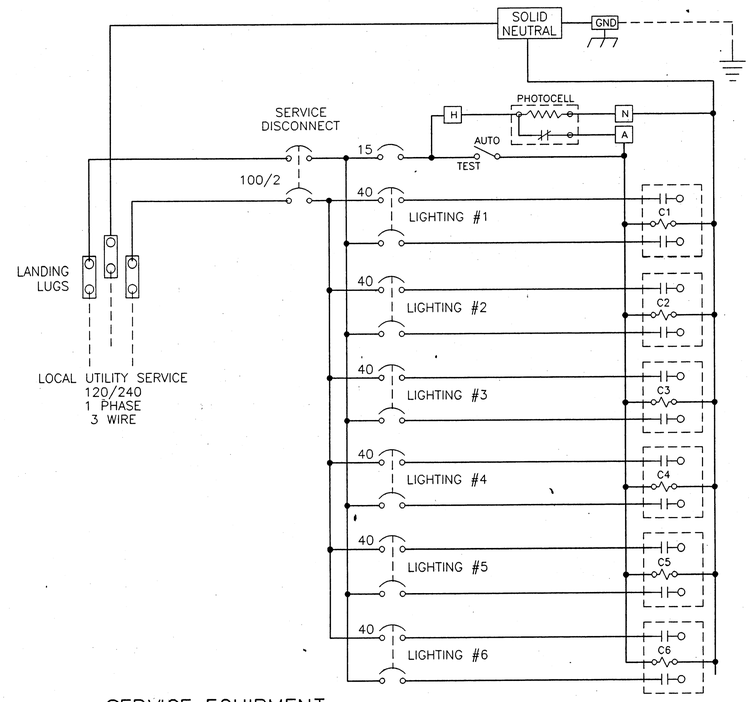

SERVICE EQUIPMENT
WIRING DIAGRAM L6UM

CONTROL CABINET CONSTRUCTION NOTES

1. CONTROL CABINET SHALL BE UL LISTED "INDUSTRIAL CONTROL PANEL" PER UL 508.
2. CONTROL CABINET SHALL MEET THE ELECTRIC UTILITY SERVICE EQUIPMENT REQUIREMENTS COMMITTEE (EUSERC) GUIDELINES.
3. CONSTRUCTION SHALL BE NEMA 3R AND 12, RAINTIGHT AND DUST TIGHT. ELECTRICALLY WELDED AND REINFORCED WHERE REQUIRED.
4. ALL NUTS, BOLTS, SCREWS AND HINGES SHALL BE STAINLESS STEEL.
5. NUTS, BOLTS & SCREWS SHALL NOT BE VISIBLE FROM OUTSIDE OF CABINET.
6. PHENOLIC NAMEPLATES SHALL BE PROVIDED AS REQUIRED.
7. CIRCUIT BREAKERS SHALL BE CABLE IN-CABLE OUT WITH LINE ON TOP & LOAD ON THE BOTTOM. HANDLE POSITION UP="ON", MIDDLE="TRIPPED", DOWN="OFF".
8. A PLASTIC COVERED WIRING DIAGRAM SHALL BE ATTACHED TO THE INSIDE OF THE FRONT DOOR.
9. CABINET SHALL BE FACTORY WIRED AND CONFORM TO REQUIRED NEMA STANDARDS.
10. ALL POWDER CONTROL COATED CONTROL CABINETS SHALL HAVE A CORROSION RESISTANT COATING WHICH INCLUDES A FIVE STEP DIP TANK METAL PREPARATION PROCESS:
    A. ALKALINE CLEANER 160° F.
    B. CLEAR WATER RINSE.
    C. IRON PHOSPHATE APPLICATION 150°.
    D. CLEAR WATER RINSE.
    E. INHIBITIVE RINSE TO SEAL PHOSPHATED SURFACES 120°.

    FINISHED WITH AN ELECTROSTATICALLY APPLIED DRY POLYESTER POWDER COATING THEN BAKED @ 380° TO CURE.
11. CONCRETE FOUNDATIONS FOR CONTROL CABINET INCLUDING EXCAVATION AND BACKFILL, CONCRETE, GROUNDRODS AND ANCHOR BOLTS, COMPLETE IN PLACE, WILL BE CONSIDERED INCIDENTAL TO THE CONTROL CABINET.

CONSTRUCTION MATERIALS AND FINISH

- [x] 12 GA HD GALVANIZED SHEET STEEL
  - [x] POWDER COATED
- [ ] 14 GA #304 STAINLESS STEEL SHEET
  - [ ] POWDER COATED COLOR:
  - [ ] NATURAL
- [ ] 0.125" ALUMINUM SHEET
  - [ ] POWDER COATED COLOR:
  - [ ] NATURAL
  - [ ] ANODIZED

POWDER COAT COLORS

- [ ] WHITE
- [ ] RANCH GREEN
- [ ] MINT GREEN
- [ ] OTHER _____
- [x] CAMEL

PHOTO ELECTRIC CELL

- [ ] ON LIGHT POLE
- [x] IN SERVICE CABINET

SCALE: NONE
DIMENSIONS ARE - #.##" INCHES, (###) MILLIMETER

AS-BUILT INFORMATION: CONTRACTOR / DATE; PLANS STAMPED BY / DATE; INSPECTOR'S ACCEPTANCE BY / DATE; FIELD VERIFICATION BY / DATE; DRAWINGS CORRECTED BY / DATE

MICRO-FILM INFORMATION: RECORDED BY / DATE; NO.

BENCH MARKS

SURVEY INFORMATION: FIELD NOTES BY / DATE; NO.

ENGINEER'S SEAL: CHARLES W. TRASK III, NEW MEXICO 6870, REGISTERED PROFESSIONAL ENGINEER — 8-12-96

NO.	DATE	REMARKS	BY
		REVISIONS	
		DESIGN	
		DESIGNED BY BHI\COA	DATE 8-96
		DRAWN BY BHI\COA	DATE 8-96
		CHECKED BY BHI\COA	DATE 8-96

BOHANNAN-HUSTON INC.
ENGINEERS • PLANNERS • PHOTOGRAMMETRISTS • SURVEYORS • LANDSCAPE • ARCHITECTS
ALBUQUERQUE LAS CRUCES SANTA FE

CITY OF ALBUQUERQUE
PUBLIC WORKS DEPARTMENT
ENGINEERING DEVELOPMENT GROUP

STEET LIGHTING
CONTROL CABINET-SIX CIRCUIT UNMETERED

DESIGN REVIEW COMMITTEE	CITY ENGINEER APPROVAL	LAST DESIGN UPDATE	MO./DAY/YR.	MO./DAY/YR.

CITY PROJECT NO.	ZONE MAP NO.	SHEET	OF
3725	A-13-Z	30	32

TRANS.[T95343A32222.SHEETS.SIGNAL] 8/19/96

ABLTC6UM.DWG

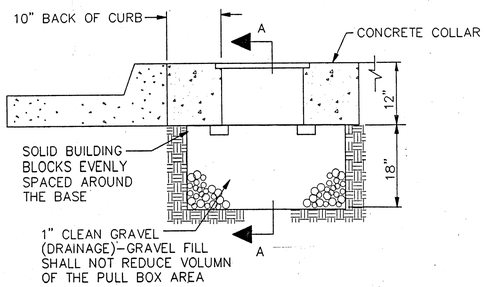

TYPICAL PULLBOX INSTALLATION

NOTE: SEE "CONCRETE COLLER DETAIL"

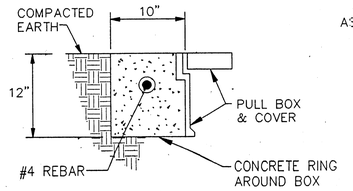

IN COMPACTED EARTH

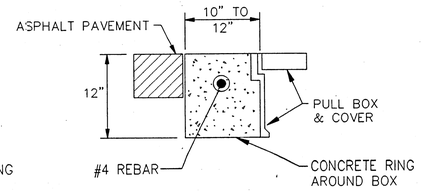

IN ASPHALT PAVEMENTS

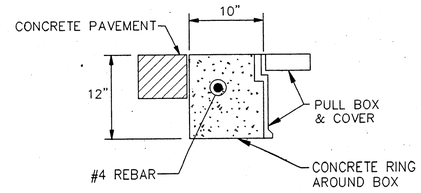

IN CONCRETE PAVEMENTS

CONCRETE COLLAR DETAILS

NOTE: THE CONCRETE COLLAR FOR THE PULL BOXES WILL BE CONSIDERED INCIDENTAL TO THE PULL BOX BID ITEMS

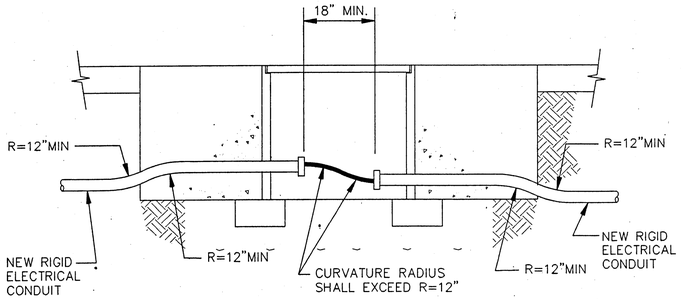

TRAFFIC SIGNAL PULL BOX (TYPICAL)

NEW CONDUIT INSTALLATION

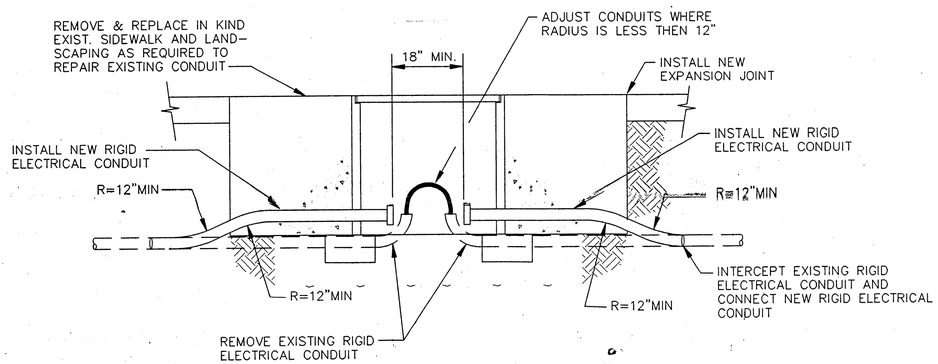

TRAFFIC SIGNAL PULL BOX (TYPICAL)

RETROFIT INSTALLATION

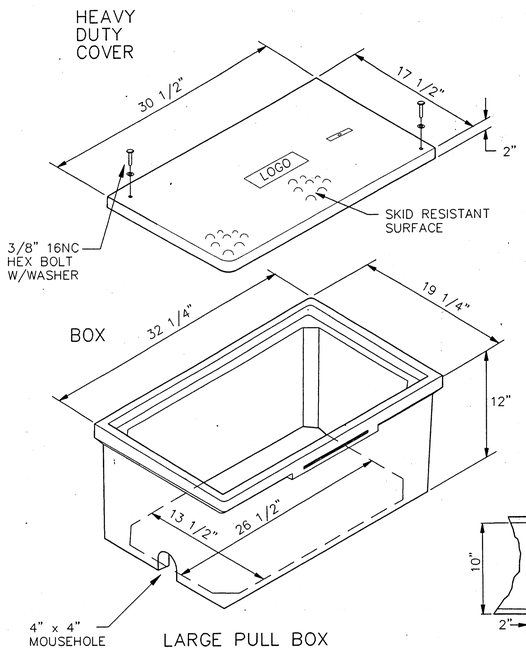

LARGE PULL BOX

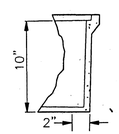

PULL BOX DETAILS

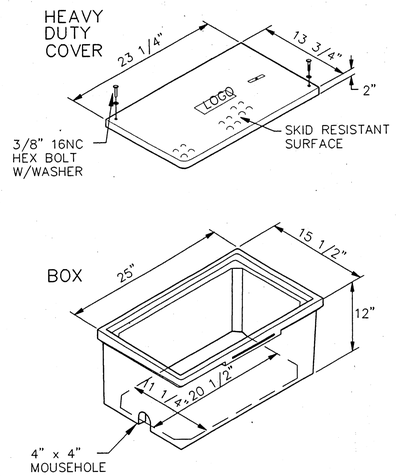

STANDARD PULL BOX

NOTES FOR HEAVY DUTY REINFORCED POLYMER MORTAR PULL BOX AND COVERS

1. MATERIAL TO BE AN AGGREGATE CONSISTING OF SAND AND GRAVEL BOUND TOGETHER WITH A POLYMER AND REINFORCED WITH CONTINUOUS WOVEN GLASS STRANDS. THE MATERIAL MUST HAVE THE FOLLOWING MECHANICAL PROPERTIES: COMPRESSIVE STRENGTH – 11,000 PSI, TENSILE STRENGTH – 1,700 PSI, FLEXURAL STRENGTH – 7,500 PSI.
2. ALL PULL BOX COVERS SHALL BE HEAVY DUTY REINFORCED POLYMER MORTAR, HAVING A SERVICE LOAD OF 22,568 LBS. OVER 10" SQUARE (225 PSI).
3. PULL BOX TYPE AND LOGO SHALL BE APPROVED BY THE PROJECT MANAGER.
4. THE DIMENSIONS OF THE PULL BOXES SHOWN ARE NOMINAL DIMENSIONS AND MAY VARY AS TO THE MANUFACTURER'S RECOMENDATIONS. ALL DIMENSIONS SHALL BE VERIFIED BY THE PROJECT MANAGER.
5. ELECTRICAL PULL BOX (STANDARD) SHALL BE A HEAVY DUTY REINFORCED POLYMER MORTAR PULL BOX AND COVER MEASURING 13 3/4" x 23 1/4" x 2".

AS–BUILT INFORMATION
CONTRACTOR — DATE
WORK STAKED BY — DATE
INSPECTOR'S NOTICE CHANGE BY — DATE
FIELD VERIFICATION BY — DATE
MAPPING CORRECTED BY — DATE
MICRO–FILM INFORMATION
RECORDED BY — DATE
NO.

BENCH MARKS

SURVEY INFORMATION
FIELD NOTES
NO. | BY | DATE

ENGINEER'S SEAL
CHARLES W. TRASK III — NEW MEXICO — 6876 — REGISTERED PROFESSIONAL ENGINEER — 8-22-96

NO.	DATE	REMARKS	BY
		REVISIONS	
		DESIGN	

DESIGNED BY BHI\COA — DATE 8–96
DRAWN BY BHI\COA — DATE 8–96
CHECKED BY BHI\COA — DATE 8–96

BOHANNAN-HUSTON INC.
ENGINEERS • PLANNERS • PHOTOGRAMMETRISTS • SURVEYORS • LANDSCAPE • ARCHITECTS
ALBUQUERQUE — LAS CRUCES — SANTA FE

CITY OF ALBUQUERQUE
PUBLIC WORKS DEPARTMENT
ENGINEERING DEVELOPMENT GROUP

STEET LIGHTING
PULL BOX DETAILS

DESIGN REVIEW COMMITTEE	CITY ENGINEER APPROVAL	LAST DESIGN UPDATE	MO./DAY/YR.	MO./DAY/YR.

CITY PROJECT NO.	ZONE MAP NO.	SHEET	OF
3725	A–13–Z	31	32

TRANS:[19534342222.SHEETS.SIGNAL] 8/19/96
ABPBDET.DWG

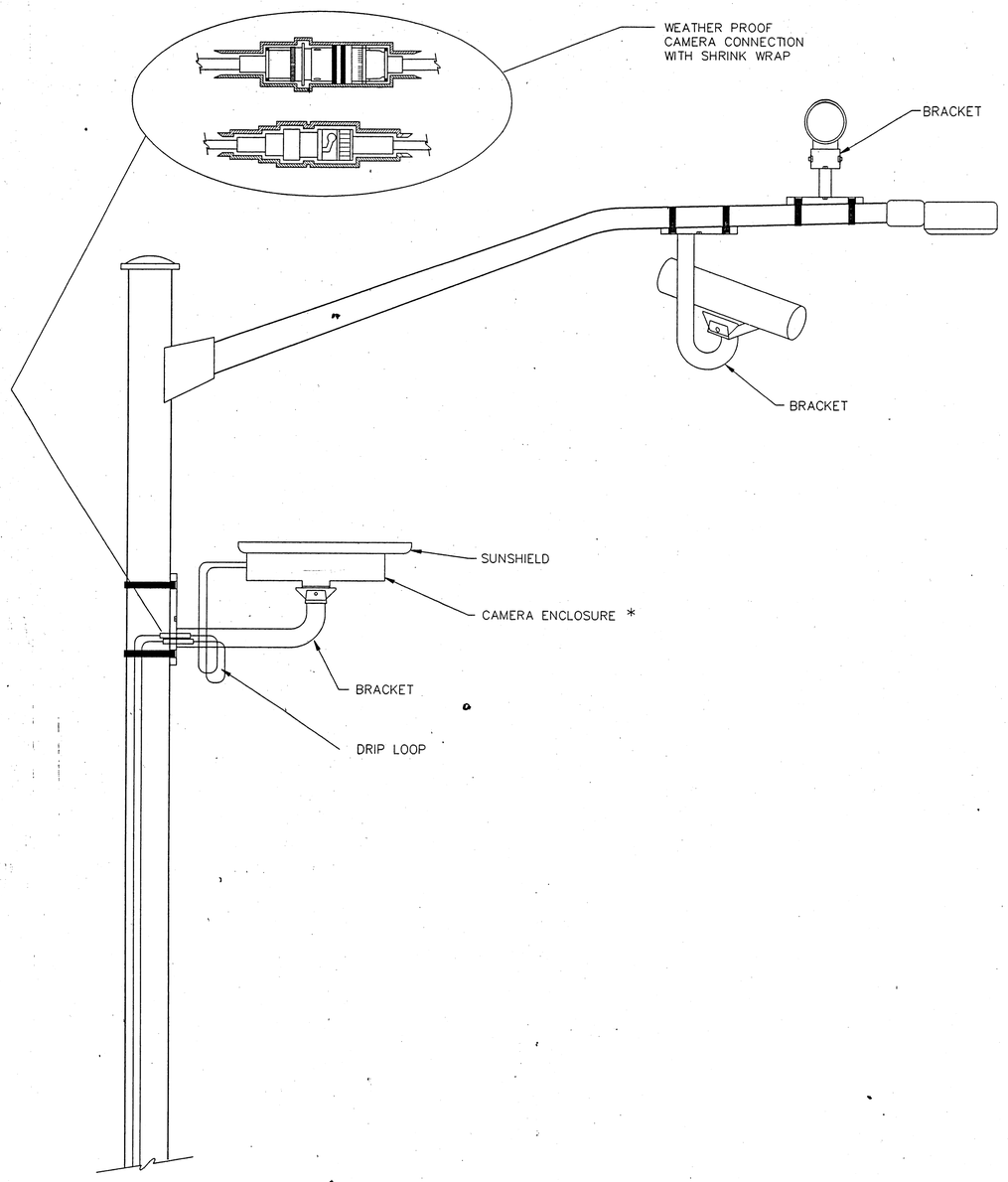

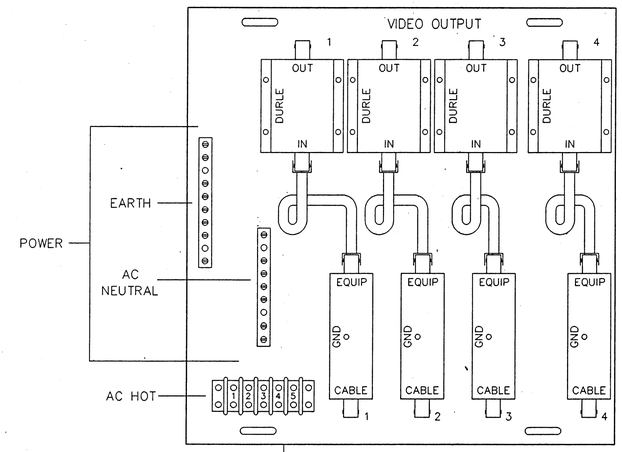

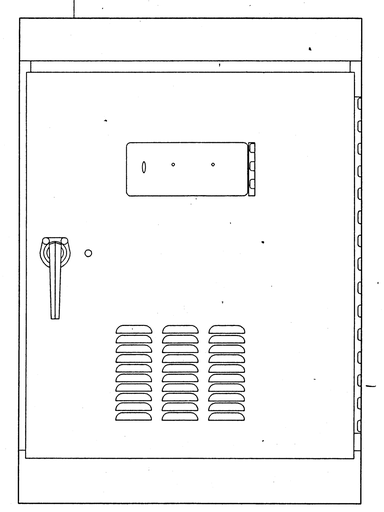

* CAMERA SHALL BE ROTATED INSIDE THE ENCLOSURE AFTER INSTALLATION, TO ALIGN HORIZON AT HORIZONTAL PLANE.

AS-BUILT INFORMATION

CONTRACTOR	DATE
WORK STAKED BY	DATE
INSPECTOR'S ACCEPTANCE BY	DATE
FIELD VERIFICATION BY	DATE
DRAWINGS CORRECTED BY	DATE

MICRO-FILM INFORMATION

RECORDED BY	DATE
NO.	

BENCH MARKS

SURVEY INFORMATION

FIELD NOTES

NO.	BY	DATE

ENGINEER'S SEAL

CHARLES W. TRASK
NEW MEXICO
6876
REGISTERED PROFESSIONAL ENGINEER
8-22-96

NO.	DATE	REMARKS
		REVISIONS
		DESIGN

DESIGNED BY BHI\COA DATE 8-96
DRAWN BY BHI\COA DATE 8-96
CHECKED BY BHI\COA DATE 8-96

BOHANNAN-HUSTON INC.
ENGINEERS • PLANNERS • PHOTOGRAMMETRISTS • SURVEYORS • LANDSCAPE • ARCHITECTS
ALBUQUERQUE LAS CRUCES SANTA FE

CITY OF ALBUQUERQUE
PUBLIC WORKS DEPARTMENT
ENGINEERING DEVELOPMENT GROUP

TRAFFIC SIGNAL
MACHINE VISION VEHICLE DETECTOR SYSTEMS

DESIGN REVIEW COMMITTEE	CITY ENGINEER APPROVAL	LAST DESIGN UPDATE	MO./DAY/YR.	MO./DAY/YR.

CITY PROJECT NO.	ZONE MAP NO.	SHEET	OF
3725	A-13-Z	32	32

TRANS[T95\3A3A32222.SHEETS.SIGNAL] 8/19/96

ABMACVIS.DWG