CITY OF ALBUQUERQUE

June 26, 2006

Ms. Yolanda Padilla, PE
BOHANNAN-HUSTON, INC.
7500 Jefferson St. NE – Courtyard 1
Albuquerque, NM 87109

RE: VENTANA HIGHLANDS, UNIT 1 @ V.R. WEST (B-8/D1E)
Engineers Certification for Release of Financial Guaranty
Engineers Stamp dated 10/05/2005
Engineers Certification dated 06/20/2006

Dear Ms. Padilla:

Based upon the information provided in your Engineer's Certification Submittal dated 06/23/2006, the above referenced plan is adequate to satisfy the Grading and Drainage Certification for Release of Financial Guaranty.

If you have any questions, you can contact me at 924-3982

Sincerely,

Arlene V. Portillo

Arlene V. Portillo
Plan Checker, Planning Dept.- Hydrology
Development and Building Services

C: Marilyn Maldonado, COA# 749487
File

P.O. Box 1293

Albuquerque

New Mexico 87103

www.cabq.gov

Bohannan Huston INC.

Courtyard
7500 Jefferson St. NE
Albuquerque, NM
87109-433

www.bhinc.com

voice: 505.823.1000
facsimile: 505.798.7988
toll free: 800.877.5332

February 13, 2007

Brad Bingham, P.E.
Hydrology Development Division
City of Albuquerque Planning Department
P. O. Box 1293
Albuquerque, NM 87103

Re: Ventana Highlands Unit 2 & 3 at Ventana Ranch West – Grading and Drainage Certification
DRB Case No 1004177; COA Drainage File # B8/D1E

Dear Brad:

The purpose of this letter is to request your concurrence of the enclosed grading and drainage certification for the above referenced subdivision in Ventana Ranch. This submittal requests approval of the certification for Ventana Highlands Unit 2 & 3 at Ventana Ranch West. The enclosed certified plan is for the grading plan Engineers Stamp dated 10-05-05. Ventana Highlands Unit 1 was approved on 6-26-06. Enclosed is the approval letter.

In order to close out this package, approval of the enclosed certification is necessary. If you have any questions, please give me a call at 823-1000.

Sincerely,

Yolanda Padilla, P.E.
Project Engineer
Community Development and Planning

YP
Enclosures

cc: Kurt Browning, LVLP (w/encl)
Kevin Daggett, DR Horton (w/encl)
Kevin Patton, Bohannan Huston, Inc.

ENGINEERING
SPATIAL DATA
ADVANCED TECHNOLOGIES

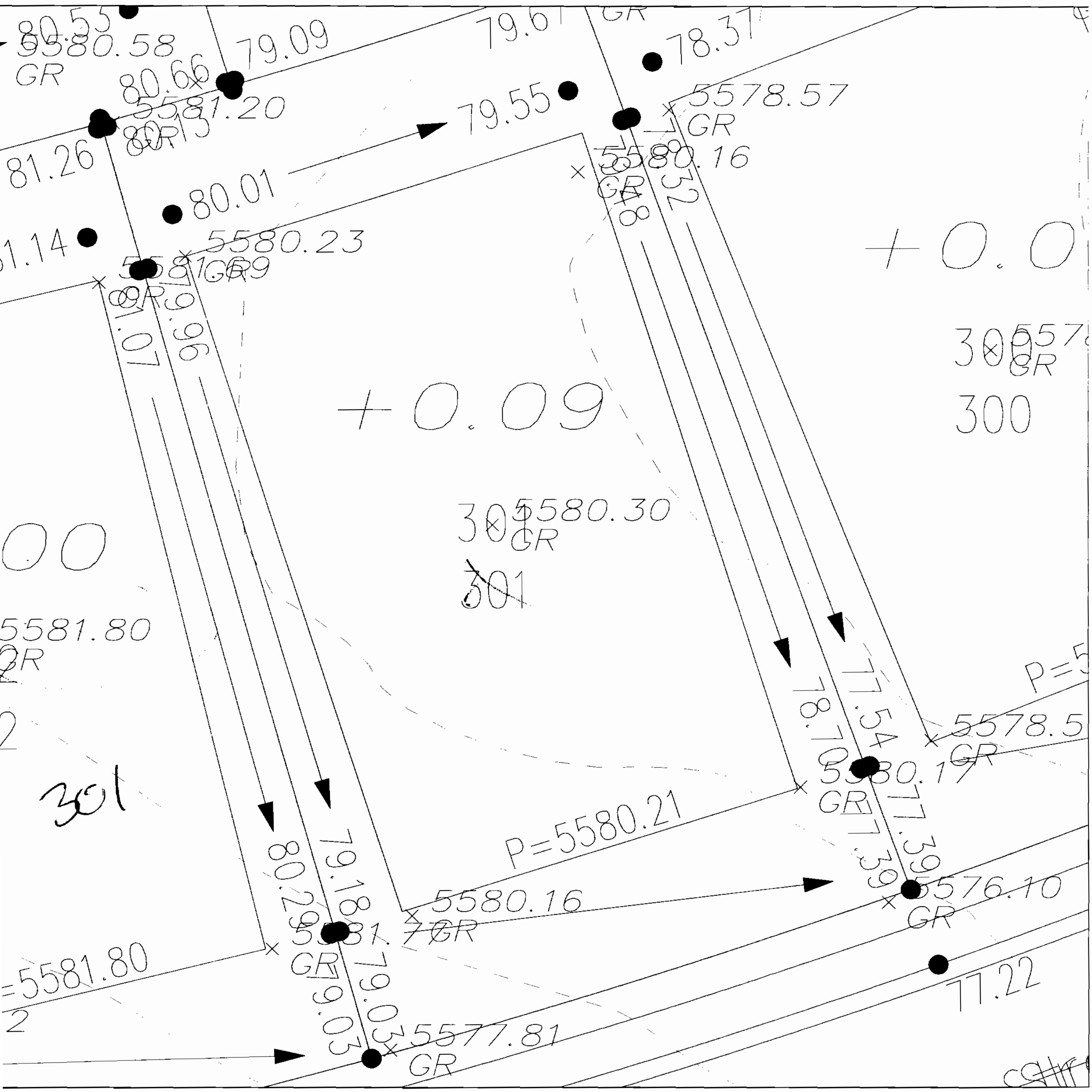

+0.09
301
5580.30
GR
301
P=5580.21
5580.16
5580.23
5580.16
5581.80
P=5581.80
80.01
79.55
79.09
79.61
78.37
5578.57
5581.20
80.66
5580.58
81.26
81.14
79.96
81.07
80.29
79.18
79.03
79.03
5577.81
5576.10
77.22
78.70
77.54
77.39
77.39
5580.17
300
300
+0.0
301

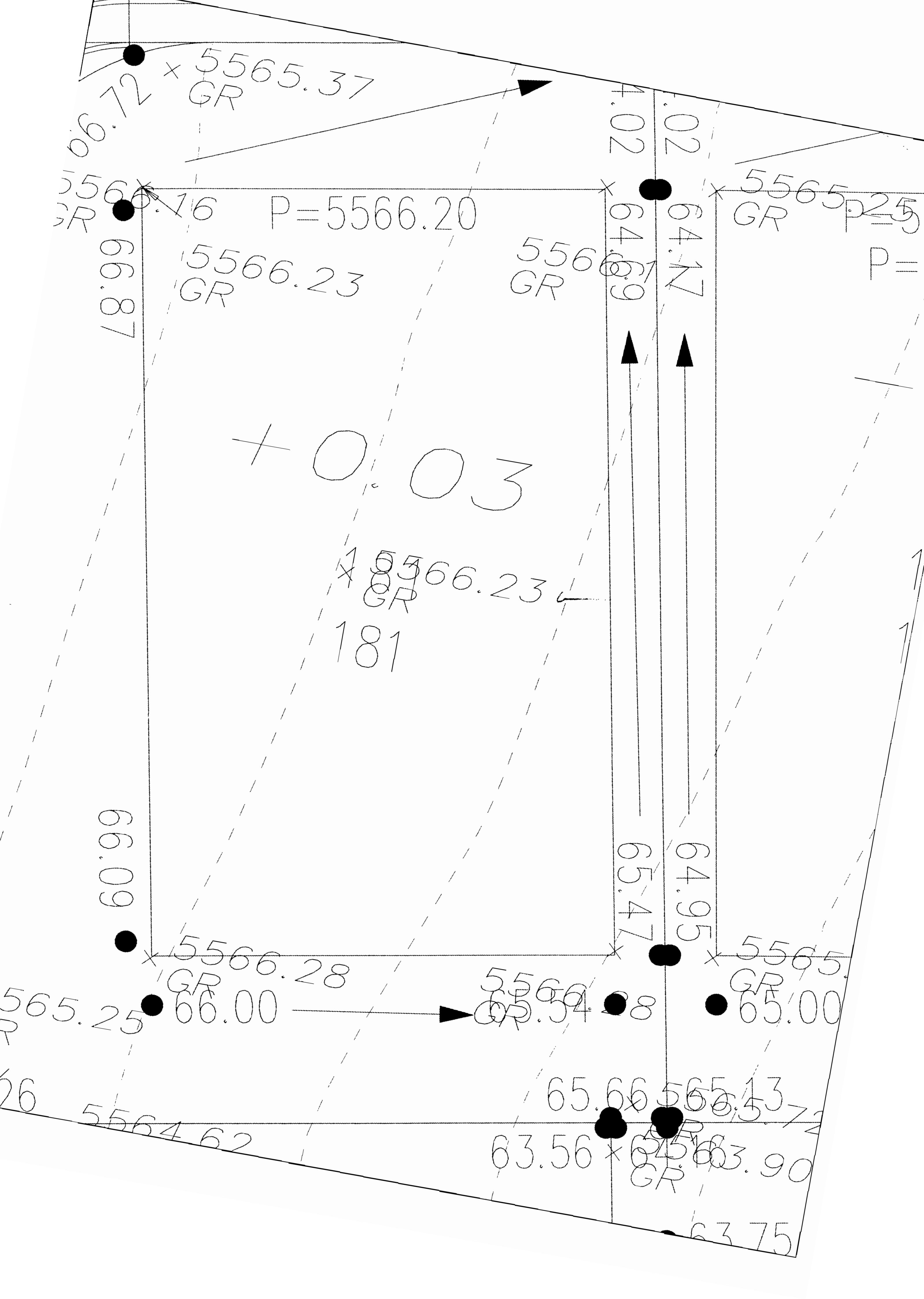
5565.37
GR
66.72
P=5566.20
5566.16
GR
66.87
5566.23
GR
5566.69
GR
64.17
5565.25
GR
+0.03
5566.23
GR
181
66.99
65.47
64.95
5566.28
GR
66.00
65.54
65.00
5565.25
5564.62
65.66
5565.13
63.56
63.90
GR
63.75

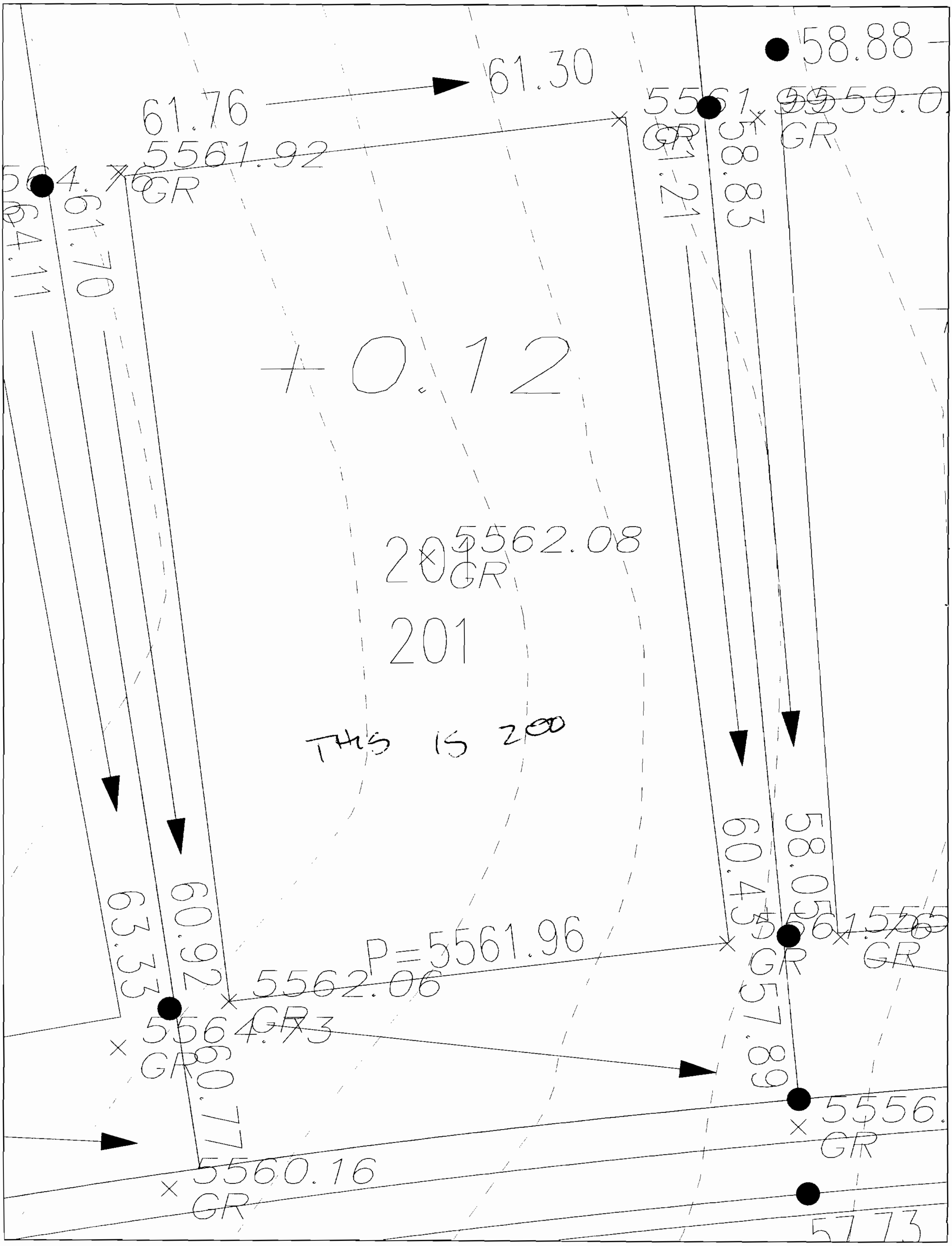

58.88
61.30
61.76
5561.92
GR
5561.99
GR
5559.0
GR
61.70
64.11
61.21
58.83
+0.12
5562.08
GR
201
THIS IS 200
60.92
63.33
60.43
58.05
P=5561.96
5562.06
GR
5564.73
GR
5561.57
GR
57.89
60.77
5560.16
GR
5556.
GR
57.73

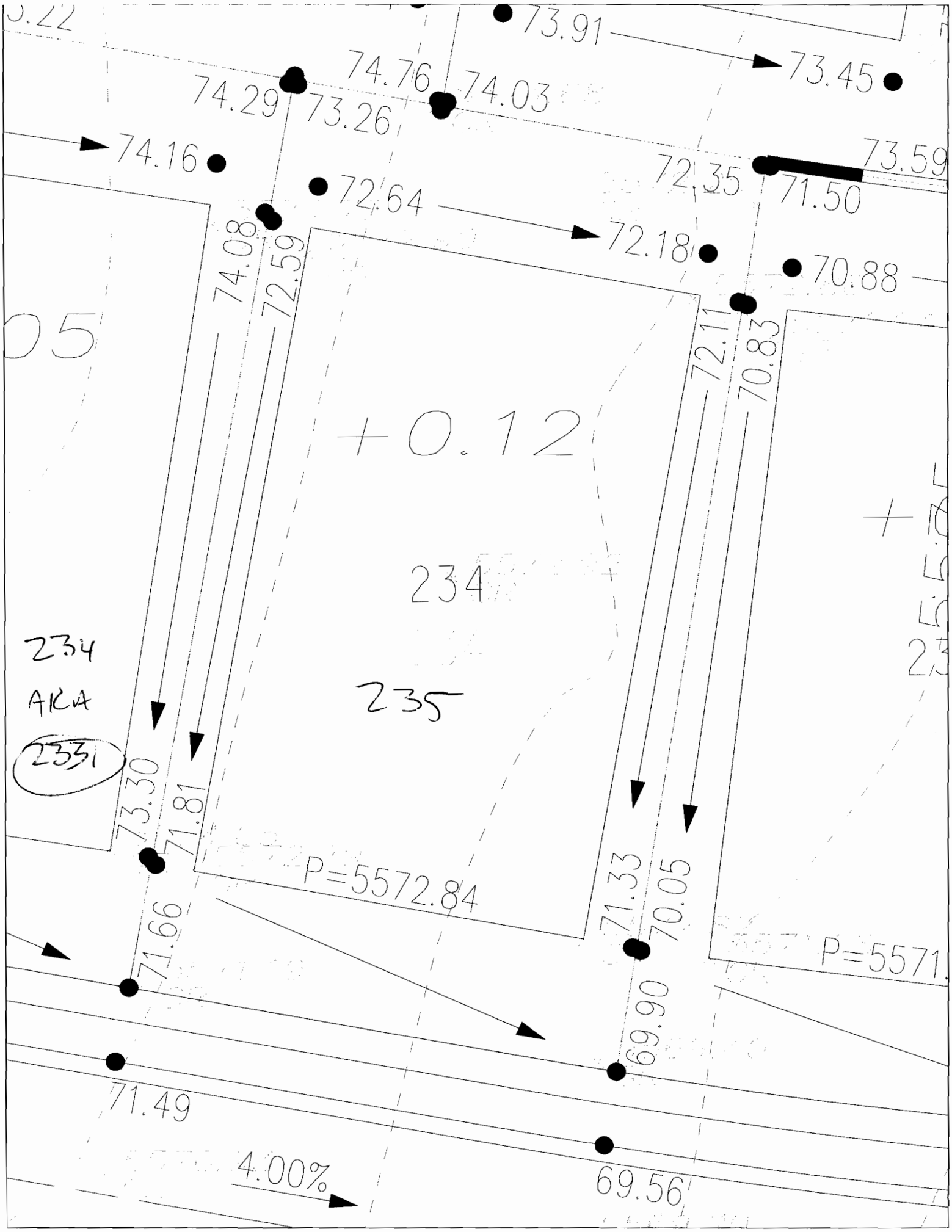
73.91
73.45
74.76
74.03
74.29
73.26
74.16
73.59
72.35
71.50
72.64
72.18
70.88
74.08
72.59
72.11
70.83
+0.12
234
235
234
AKA
233
73.30
71.81
P=5572.84
71.33
70.05
71.66
69.90
71.49
4.00%
69.56

BASIN SUMMARY FOR VENTANA HIGHLANDS AT VENTANA RANCH WEST

HYDROLOGICAL VOLUMETRIC & DISCHARGE DATA

BASIN I.D.	AREA (AC)	UNITS #	% LAND TREATMENT A	B	C	D	DISCHARGE (CFS) 10 YR	100YR
HYRDOLOGICAL VOLUMETRIC & DISCHARGE DATA (EXISTING)								
OFFSITE (FLOWS ONSITE)								
BASINS								
Basin A	20.19		99.0%	1.0%	0.0%	0.0%	5.17	25.78
Basin B	52.86		97.5%	1.5%	1.0%	0.0%	14.32	68.52
SUBTOTAL	**73.05**						**19.50**	**94.29**
ONSITE								
BASINS								
A	11.24	54	0.0%	27.5%	27.5%	45.0%	21.99	37.75
B	11.37	57	0.0%	27.5%	27.5%	45.0%	21.75	37.65
C	24.52	105	0.0%	27.5%	27.5%	45.0%	47.86	82.22
D	6.61	32	0.0%	27.5%	27.5%	45.0%	12.64	21.88
E	0.21	0	0.0%	5.0%	5.0%	90.0%	0.56	0.87
F	1.16	0	0.0%	5.0%	5.0%	90.0%	3.15	4.86
G	1.65	6	0.0%	27.5%	27.5%	45.0%	3.16	5.46
H	8.64	34	0.0%	27.5%	27.5%	45.0%	17.36	29.50
I	7.43	36	0.0%	27.5%	27.5%	45.0%	14.21	24.59
J	0.23	0	0.0%	27.5%	27.5%	45.0%	0.45	0.78
							143.12	**245.54**
SUBTOTALS	**73.05**	**324**						
OFFSITE								
OFFSITE PARK 1	**0.56**		0.0%	95.0%	0.0%	0.0%	**0.63**	**1.36**
TOTAL	**73.61**						**143.75**	**246.90**
SUB-BASINS								
A-1	5.39	27	0.0%	27.5%	27.5%	45.0%	10.32	17.86
A-2	2.77	14	0.0%	27.5%	27.5%	45.0%	5.30	9.17
A-3	2.48	13	0.0%	27.5%	27.5%	45.0%	4.74	8.20
A-4	0.60	0	0.0%	5.0%	5.0%	90.0%	1.63	2.51
B-1	2.69	14	0.0%	27.5%	27.5%	45.0%	5.15	8.92
B-2	2.91	14	0.0%	27.5%	27.5%	45.0%	5.57	9.63
B-3	2.79	14	0.0%	27.5%	27.5%	45.0%	5.35	9.25
B-4	2.97	15	0.0%	27.5%	27.5%	45.0%	5.69	9.84
C-1	3.19	15	0.0%	27.5%	27.5%	45.0%	6.10	10.56
C-2	0.47	0	0.0%	5.0%	5.0%	90.0%	1.29	1.98
C-3	0.26	0	0.0%	27.5%	27.5%	45.0%	0.50	0.87
C-4	1.90	7	0.0%	27.5%	27.5%	45.0%	3.64	6.30
C-5	3.11	15	0.0%	27.5%	27.5%	45.0%	5.96	10.31
C-6	0.24	0	0.0%	27.5%	27.5%	45.0%	0.46	0.80
C-7	3.29	16	0.0%	27.5%	27.5%	45.0%	6.29	10.89
C-8	0.23	0	0.0%	5.0%	5.0%	90.0%	0.63	0.98
C-9	2.67	12	0.0%	27.5%	27.5%	45.0%	5.11	8.85
C-10	0.49	0	0.0%	5.0%	5.0%	90.0%	1.32	2.04
C-11	0.84	7	0.0%	27.5%	27.5%	45.0%	1.61	2.79
C-12	1.00	9	0.0%	27.5%	27.5%	45.0%	1.91	3.30
C-13	0.81	1	0.0%	27.5%	27.5%	45.0%	1.56	2.69
C-14	2.62	11	0.0%	27.5%	27.5%	45.0%	5.02	8.68
C-15	3.38	12	0.0%	27.5%	27.5%	45.0%	6.46	11.18
D-1	3.16	16	0.0%	27.5%	27.5%	45.0%	6.05	10.47
D-2	1.56	7	0.0%	27.5%	27.5%	45.0%	2.98	5.15
D-3	1.89	9	0.0%	27.5%	27.5%	45.0%	3.61	6.25
G1	0.63	4	0.0%	27.5%	27.5%	45.0%	1.20	2.08
G-2	1.02	2	0.0%	27.5%	27.5%	45.0%	1.95	3.38
H-1	0.68	2	0.0%	27.5%	27.5%	45.0%	1.30	2.25
H-2	1.71	9	0.0%	27.5%	27.5%	45.0%	3.27	5.66
H-3	2.07	6	0.0%	27.5%	27.5%	45.0%	3.95	6.84
H-4	1.93	10	0.0%	27.5%	27.5%	45.0%	3.69	6.39
H-5	0.22	0	0.0%	5.0%	5.0%	90.0%	0.58	0.90
H-6	0.83	0	0.0%	5.0%	5.0%	90.0%	2.25	3.47
H-7	0.50	3	0.0%	27.5%	27.5%	45.0%	0.95	1.65
H-8	0.71	4	0.0%	27.5%	27.5%	45.0%	1.35	2.33
I-1	0.39	0	0.0%	27.5%	27.5%	45.0%	0.75	1.31
I-2	2.47	12	0.0%	27.5%	27.5%	45.0%	4.73	8.18
I-3	1.31	7	0.0%	27.5%	27.5%	45.0%	2.51	4.35
I-4	0.78	4	0.0%	27.5%	27.5%	45.0%	1.49	2.58
I-5	0.75	4	0.0%	27.5%	27.5%	45.0%	1.44	2.49
I-6	0.80	4	0.0%	27.5%	27.5%	45.0%	1.54	2.66
I-7	0.91	5	0.0%	27.5%	27.5%	45.0%	1.75	3.02
SUBTOATAL	**71.45**	**324**					**144.13**	**239.04**

NOTES:

Impervious percentages were calculated from the DPM equation A-4, with the remaining percentages distributed to land treatment type B, due to the relatively flat terrain

N=UNITS/ACRES = 4.4

%D= 7*SQRT((N*N)+(5*N)) = 45.3 %

*Table A-4

**Table A-11

RECEIVED
AUG 1 0 2005
HYDROLOGY SECTION

YOLANDA Q. PADILLA
NEW MEXICO
16035
REGISTERED PROFESSIONAL ENGINEER