LEGEND

- PROPERTY LINE
- 5255 EXISTING CONTOUR
- 5255 PROPOSED CONTOUR
- PROPOSED CURB
- SILT FENCE
- STABILIZED CONSTRUCTION ENTRANCE
- * SEDIMENT CONTROL STRUCTURE TO BE INSTALLED AT THE BACK OF CURB

GENERAL NOTES

1. THE CONTRACTOR SHALL BE RESPONSIBLE FOR FULFILLING ALL NECESSARY NATIONAL POLLUTANT DISCHARGE ELIMINATION SYSTEM (NPDES) REQUIREMENTS INCLUDING, BUT NOT LIMITED TO, OBTAINING AN NPDES PERMIT PRIOR TO CONSTRUCTION, FILLING OUT THE NOTICE OF INTENT (NOI) APPLICATION, AND FILLING OUT THE NOTICE OF TERMINATION (NOT) APPLICATION. THE CONTRACTOR SHALL ALSO BE RESPONSIBLE FOR THE IMPLEMENTATION OF AND INSPECTION REPORTS FOR THE STORM WATER POLLUTION PREVENTION PLAN (SWPPP).
2. THE CONTRACTOR SHALL MAINTAIN A COPY OF THE APPROVED SWPPP ON-SITE AT ALL TIMES, AND SHALL COMPLY WITH THE REQUIREMENTS INDICATED ON THAT PLAN.
3. THE CONTRACTOR SHALL CONFORM TO ALL CITY, COUNTY, STATE AND FEDERAL DUST AND EROSION CONTROL REGULATIONS. THE CONTRACTOR SHALL PREPARE AND OBTAIN ANY NECESSARY DUST OR EROSION CONTROL PERMITS FROM THE REGULATORY AGENCIES.
4. CONSTRUCTION AREAS SHALL BE WATERED FOR DUST CONTROL IN COMPLIANCE WITH CITY OF ALBUQUERQUE ORDINANCES. THE CONTRACTOR SHALL BE RESPONSIBLE FOR LOCATING AND SUPPLYING WATER AS REQUIRED. WATERING, AS REQUIRED FOR CONSTRUCTION AND DUST CONTROL, SHALL BE CONSIDERED INCIDENTAL TO CONSTRUCTION AND NO MEASUREMENT OR PAYMENT SHALL BE MADE THEREFOR.
5. ANY AREAS DISTURBED BY CONSTRUCTION AND NOT COVERED BY LANDSCAPING OR AN IMPERVIOUS SURFACE SHALL BE REVEGETATED WITH NATIVE GRASS SEEDING. WHEN CONSTRUCTION ACTIVITIES CEASE AND EARTH DISTURBING ACTIVITIES WILL NOT RESUME WITHIN 14 DAYS, STABILIZATION MEASURES MUST BE INITIATED. UNLESS INDICATED OTHERWISE ON THESE PLANS OR ON THE LANDSCAPING PLAN, NATIVE GRASS SEEDING SHALL BE CLASS A SEEDING PER SECTION 1012 OF THE NEW MEXICO STANDARD SPECIFICATIONS FOR PUBLIC WORKS CONSTRUCTION, APWA NM CHARTER, LATEST EDITION.
6. ALL WASTE PRODUCTS FROM THE CONSTRUCTION SITE, INCLUDING ITEMS DESIGNATED FOR REMOVAL, CONSTRUCTION WASTE, CONSTRUCTION EQUIPMENT WASTE PRODUCTS (OIL, GAS, TIRES, ETC.) GARBAGE, GRUBBING, EXCESS CUT MATERIAL, VEGETATIVE DEBRIS, ETC. SHALL BE APPROPRIATELY DISPOSED OF OFF-SITE. IT SHALL BE THE CONTRACTOR'S RESPONSIBILITY TO OBTAIN PERMITS REQUIRED TO HAUL OR DISPOSE OF WASTE PRODUCTS. IT SHALL BE THE CONTRACTOR'S RESPONSIBILITY TO ENSURE THAT THE WASTE DISPOSAL SITE COMPLIES WITH CITY, STATE, AND FEDERAL REGULATIONS REGARDING THE ENVIRONMENT, ENDANGERED SPECIES, AND ARCHAEOLOGICAL RESOURCES.
7. THE CONTRACTOR SHALL BE RESPONSIBLE FOR THE CLEANUP AND REPORTING OF SPILLS OF HAZARDOUS MATERIALS ASSOCIATED WITH THE CONSTRUCTION SITE. HAZARDOUS MATERIALS INCLUDE GASOLINE, DIESEL FUEL, MOTOR OIL, SOLVENTS, CHEMICALS, PAINTS, ETC. WHICH MAY BE A THREAT TO THE ENVIRONMENT. THE CONTRACTOR SHALL REPORT THE DISCOVERY OF PAST OR PRESENT SPILLS TO THE NEW MEXICO ENVIRONMENT DEPARTMENT EMERGENCY RESPONSE TEAM AT 505-827-9329.
8. THE CONTRACTOR SHALL COMPLY WITH ALL APPLICABLE LOCAL, STATE AND FEDERAL REGULATIONS CONCERNING SURFACE AND UNDERGROUND WATER. CONTACT WITH SURFACE WATER BY CONSTRUCTION EQUIPMENT AND PERSONNEL SHALL BE MINIMIZED. EQUIPMENT MAINTENANCE AND REFUELING OPERATIONS SHALL BE PERFORMED IN AN ENVIRONMENTALLY SAFE MANNER IN COMPLIANCE WITH GOVERNMENT REGULATIONS.
9. WHERE PRIVATE STORM INLETS ARE SUSCEPTIBLE TO INFLOW OF SILT OR DEBRIS FROM CONSTRUCTION ACTIVITIES, PROTECTION SHALL BE PROVIDED ON THEIR UPSTREAM SIDE UTILIZING BMPS IDENTIFIED IN THE APPROVED SWPPP.
10. NO OFFSITE STORM DRAIN INLETS SHALL BE COVERED. ONLY ONSITE/PROPOSED INLETS CAN BE COVERED DURING CONSTRUCTION.
11. IF SEDIMENT ESCAPES THE CONSTRUCTION SITE IT SHALL BE REMOVED FROM THE ADJACENT PROPERTY OR PUBLIC RIGHT-OF-WAY AT THE TIME OF OCCURRENCE. OFF-SITE TRACKING OF SEDIMENT SHALL BE SWEPT AT THE END OF EACH DAY.
12. PROJECT IS REQUIRED TO MAINTAIN A REGIMENT OF STREET SWEEPING AND CLEAN UP MEASURES IN THE EVENT OF TRACK OUT TO MINIMIZE AND PREVENT OFF SITE CONVEYANCES DURING CONSTRUCTION.

N

60 30 0 30

1" = 60'

KEYED NOTES

- (A) INSTALL SILT FENCE PER DETAIL SHEET 2.
- (B) INSTALL CONCRETE WASH OUT
- (C) DUMPSTER

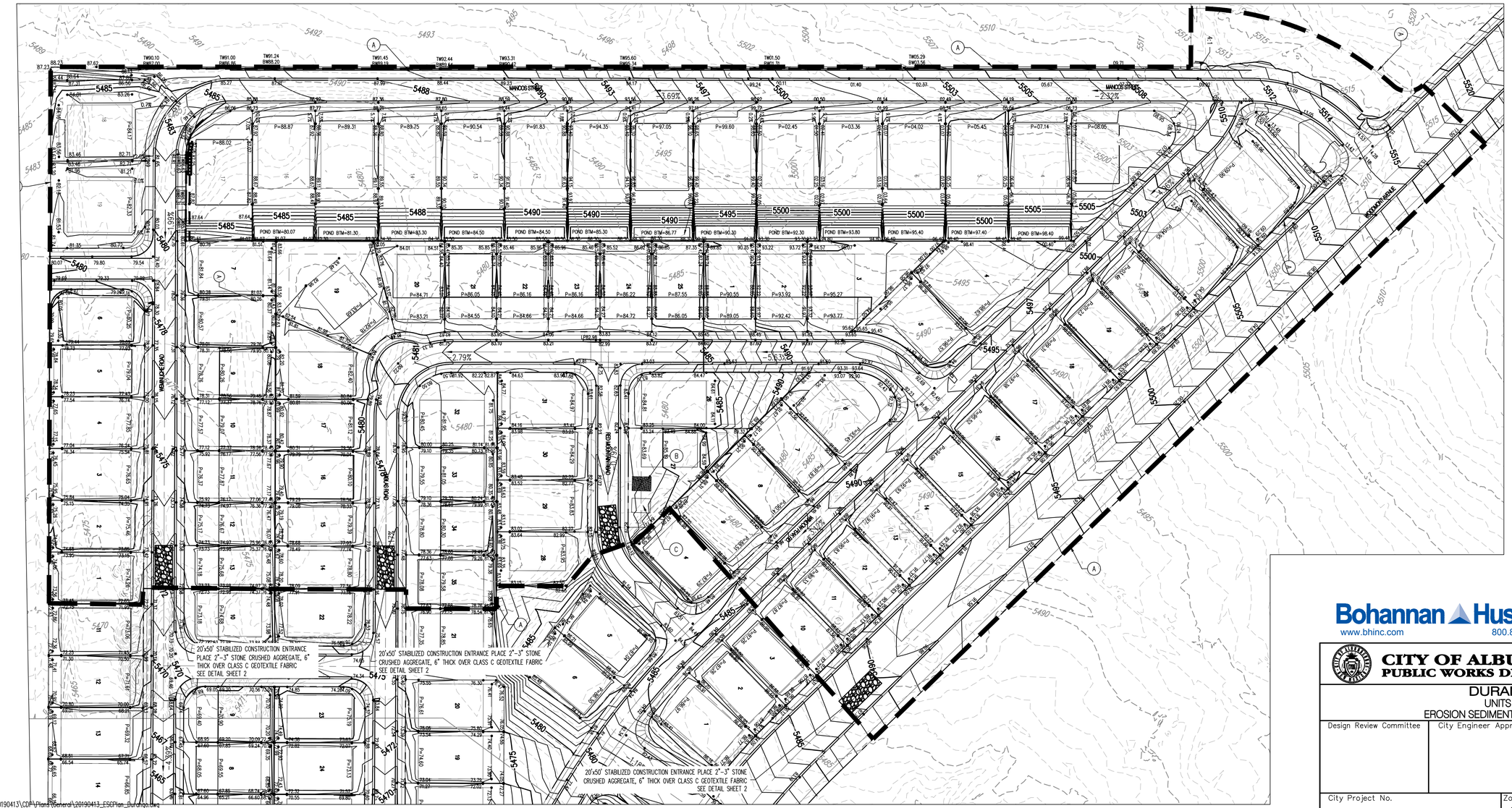

P:\20190413\CDP\Plans\General\20190413_ESCPlan_Durango.dwg
March 19, 2019 - 11:20am

Bohannan Huston
www.bhinc.com 800.877.5332

AS-BUILT INFORMATION
CONTRACTOR DATE
WORK STAKED BY DATE
WORK INSPECTED & ACCEPTANCE BY DATE
FIELD DOCUMENTATION BY DATE
DRAWINGS CORRECTED BY DATE
MICROFILM INFORMATION
RECORDED BY DATE
NO.

BENCH MARKS
ACS MONUMENT STAMPED "UNION"
GEOGRAPHIC POSITION (NAD 83)
N.M. STATE PLANE COORDINATES (CENTRAL ZONE)
N = 1,523,503.475 E = 1,493,655.030
GROUND-TO-GRID FACTOR = 0.999664360
$\Delta\alpha$ = -00°16'58.96"
NAVD 1988 ELEVATION = 5524.950

SURVEY INFORMATION
FIELD NOTES

NO.	BY	DATE

ENGINEER'S SEAL
YOLANDA PADILLA-JACKSON
16035
LICENSED PROFFESIONAL ENGINEER
3-19-19

No.	Date	REMARKS	By
		REVISIONS	
		DESIGN	

Designed By: JL DATE: 01/2019
Drawn By: AR DATE: 01/2019
Checked By: YPM

CITY OF ALBUQUERQUE
PUBLIC WORKS DEPARTMENT

DURANGO
UNITS 3-5
EROSION SEDIMENT CONTROL PLAN

Design Review Committee	City Engineer Approval	Last Design Update	Mo./Day/Yr.	Mo./Day/Yr.

City Project No.	Zone Map No.	Sheet	Of
	C-09-Z	1	2

Stabilized Construction Entrance

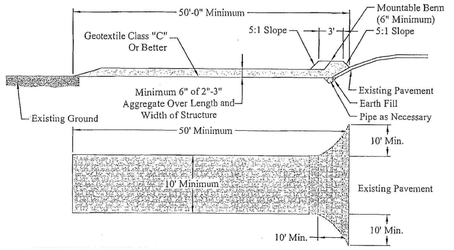

GENERAL NOTE:

WHEN SILT FENCE IS USED FOR FILTER DAM INSTALLED IN DITCHES A SUPPORTING FENCE SHALL BE PROVIDED AND THE POST SPACING SHALL BE 4' MAXIMUM.

SILT FENCE NOTES:

1. POST SPACING SHALL BE 4 FT. MAXIMUM w/o SUPPORTING FENCE. 10 FT. MAXIMUM WITH SUPPORTING FENCE.

2. POSTS FOR 4 FT. MAXIMUM POST SPACING SHALL BE 2 INCH SQUARE OR HEAVIER WOOD POSTS OR STANDARD 1 OR U SECTION STEEL POSTS WEIGHING NOT LESS THAN 1.0 LB. PER LINEAR FOOT. POSTS FOR 10 FT. MAXIMUM POST SPACING SHALL BE 4 INCH SQUARE OR HEAVIER WOOD POSTS OR STEEL POSTS AS SPECIFIED ABOVE.

3. SUPPORTING FENCE SHALL BE WIRE MESH (14 GA. MIN., 6 INCH MAX. MESH OPENING SIZE 2"x2").

4. SUPPORTING FENCE SHALL BE FASTENED SECURELY TO POSTS WITH STAPLES OR WIRE TIES. FILTER FABRIC SHALL BE FASTENED SECURELY TO SUPPORTING FENCE WITH WIRE TIES SPACED AT 24 INCH CENTERS ALONG THE TOP AND MID-SECTION. WHEN A SUPPORTING FENCE IS NOT USED, FILTER FABRIC SHALL BE SECURELY FASTENED TO POSTS WITH STAPLES OR WIRE TIES.

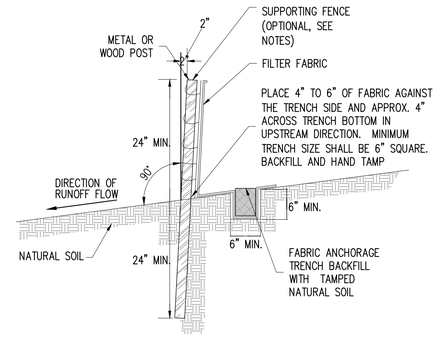

PLAN

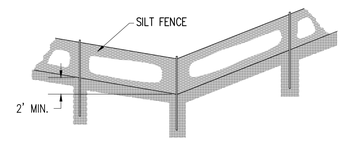

ELEVATION

SILT FENCE DETAIL

NOT TO SCALE

EROSION CONTROL NOTES

EROSION CONTROL SCHEDULE AND SEQUENCING. SEE SWPPP PLAN FOR OPERATOR RESPONSIBLE FOR EACH CONTROL MEASURE LISTED AND BMP DETAILS.

1. ROUGH GRADING – INSTALL SILT FENCE OR STRAW WATTLE, STABILIZED CONSTRUCTION ENTRANCE AND SEDIMENT PONDS WHERE PRACTICAL. INSTALL BEFORE GRADING IF POSSIBLE; IF NOT, THEN CONCURRENT WITH MAJOR GRADING. WATER SHALL BE APPLIED TO STABILIZE DISTURBED AREAS.
2. UTILITY INSTALLATION – MAINTAIN SOIL EROSION MEASURES DURING BUILDING CONSTRUCTION AND UTILITY INSTALLATION. WATER SHALL BE APPLIED FOR SOIL STABILIZATION AS NECESSARY. WHEN INSTALLING UTILITIES BEHIND THE CURB, DIRT SHOULD NOT BE PLACED IN THE STREET.
3. HOME CONSTRUCTION – INSTALL SILT FENCE AT THE BACK OF CURB OR CUT BACK CURB PER DETAIL THIS SHEET DURING HOME CONSTRUCTION. WATER SHALL BE APPLIED FOR SOIL STABILIZATION AS NECESSARY.
4. FINAL STABILIZATION – FINAL STRUCTURAL AND STABILIZATION CONTROLS INSTALLED PER APPROVED CONSTRUCTION AND LANDSCAPING DRAWINGS (REFERENCED BY SWPPP PLAN).

DURING CONSTRUCTION STORMWATER CONTROL NOTES:
1. STABILIZED CONSTRUCTION ENTRANCES REQUIRED BETWEEN PAVED/UNPAVED TRANSITIONS. LIMIT NUMBER OF ENTRANCES. PLACE STRAW WATTLE ACROSS THE CONSTRUCTION ENTRANCE AT THE END OF EACH DAY.
2. SILT FENCE OR STRAW WATTLE TO BE INSTALLED AT INITIAL GRADING FOR TEMPORARY STRUCTURAL CONTROL. SILT FENCE OR STRAW WATTLE MAY BE ATTACHED TO CONSTRUCTION SECURITY FENCING FOR ADDITIONAL STABILITY WHERE NECESSARY.
3. DISTURBED AREAS WILL BE WATERED PERIODICALLY FOR TEMPORARY STABILIZATION AND DUST CONTROL.
4. MATERIALS STORAGE & EQUIPMENT STAGING AREA MAY BE RELOCATED BASED ON CONTRACTOR PREFERENCE AND CHANGING CONDITIONS AT THE JOB SITE, AS LONG AS POSSIBLE DISCHARGE IS CONTAINED ON SITE.
5. LOCATIONS OF TRASH, PORTA-LETS AND CONCRETE WASH-OUT PITS TO BE REDLINED ON THIS DRAWING.
6. NO DISCHARGE TO WATERS OF THE U.S. OR LISTED WETLANDS.
7. NO OFF-SITE STORAGE OR BORROW AREAS.

AFTER CONSTRUCTION STORMWATER CONTROL NOTES:
1. REFER TO APPROVED CONSTRUCTION DRAWINGS FOR FINAL STRUCTURAL CONTROLS INCLUDE SIDEWALKS, DRIVEWAY AREAS, RUNDOWNS AND DRAINAGE WAYS.
2. REFER TO APPROVED LANDSCAPING DRAWINGS OR FINAL STABILIZATION OF DISTURBED AREAS.

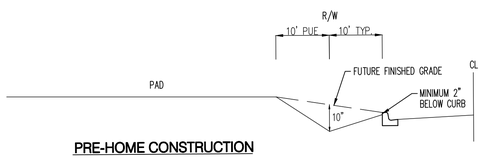

PRE-HOME CONSTRUCTION

NOTE: IF PAD HAS BEEN EFFECTIVELY STABILIZED, DEPTH OF SEDIMENT POND CAN BE REDUCED TO 4"

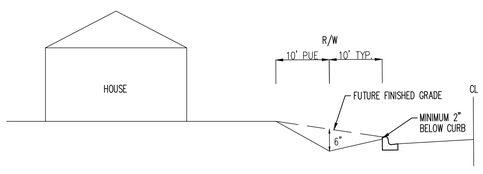

HOME UNDER CONSTRUCTION

NOTE: IF CURB HAS BEEN CUT, THEN GRADE TO BE A MINIMUM OF 2" BELOW CUT-GRADE

TYPICAL LOT GRADING - SEDIMENTATION POND

NOT TO SCALE

AS-BUILT INFORMATION

CONTRACTOR	DATE
WORK STAKED BY	DATE
WORK ACCEPTANCE BY	DATE
FIELD VERIFICATION BY	DATE
DRAWINGS CORRECTED BY	DATE

MICROFILM INFORMATION

RECORDED BY	DATE
NO.	

BENCH MARKS

ACS MONUMENT STAMPED "UNION"
GEOGRAPHIC POSITION (NAD 83)
N.M. STATE PLANE COORDINATES (CENTRAL ZONE)
N = 1,523,503.475 E = 1,493,655.030
GROUND-TO-GRID FACTOR = 0.999664360
$\Delta\alpha$ = -00°16'58.96"
NAVD 1988 ELEVATION = 5524.950

SURVEY INFORMATION

FIELD NOTES

NO.	BY	DATE

ENGINEER'S SEAL

YOLANDA PADILLA-ALVAREZ
16035
1-19-19
LICENSED PROFFESIONAL ENGINEER

No.	Date	REMARKS	By

REVISIONS

DESIGN

Designed By: JL DATE: 01/2019
Drawn By: AR DATE: 01/2019
Checked By: YPM DATE: 01/2019

Bohannan Huston
www.bhinc.com 800.877.5332

CITY OF ALBUQUERQUE
PUBLIC WORKS DEPARTMENT

DURANGO
UNITS 3-5
EROSION SEDIMENT CONTROL PLAN

Design Review Committee	City Engineer Approval	Last Design Update	Mo./Day/Yr.	Mo./Day/Yr.

City Project No.	Zone Map No.	Sheet	Of
	C-09-Z	2	2

P:\20190413\CDP\Plans\General\20190413_ESCPlan_Durango.dwg
March 19, 2019 – 11:02am