PUBLIC WORKS/HYDROLOGY

C13/D8

C13/D8

25×10

**City of Albuquerque**
P.O. BOX 1293 ALBUQUERQUE, NEW MEXICO 87103

C13/D8

RECEIVED
FEB 14 1990
HYDROLOGY SECTION

February 12, 1990

CERTIFICATE OF COMPLETION AND ACCEPTANCE

Mr. Wally Sedden
Duke City Distributors
3203 Broadway S.E.
Albuquerque, NM 87105

RE: PROJECT NO. 3947, PARADISE HILLS CONOCO, (MAP NO. C-13)

Dear Mr. Sedden:

This is to certify that the City of Albuquerque accepts Project No. 3947 as being completed according to approved plans and construction specifications. The City of Albuquerque will accept for continuous maintenance all public infrastructure improvements constructed as part of Project No. 3947.

The project is described as follows:

- Installed 110' of 14" DIP water line to serve the Paradise Hills Conoco Station on the east side of Coors Rd. one (1) block south of Paseo Del Norte. Also installed one (1) fire hydrant and 1" service.

- The contractor's correction period begins the date of this letter and will be effective for a period of one (1) year.

Sincerely,

Brian L. Speicher, P.E.
Chief Construction Engineer
Design/Construction Division
Engineering Group
Public Works Department

BLS:kt



25 x 10

xc: Bohannan-Huston, Inc.
Fred Myers Excavation Contractors
Fred Aguirre, Engineering Group, PWD
Phil Fischer, Engineering Group, PWD
Ray Pang, Engineering Group, PWD
Terri Martin, Engineering Group, PWD
Jeanette Barrett, Special Assessments
Sam Hall, Operations Group, PWD
A. N. Gaume, Operations Group, PWD
Jim Fink, Operations Group, PWD
Ray Chavez, Engineering Group, PWD
Jon Ertsgaard, Water/Wastewater Group, PWD
Dave Parks, Engineering Group, PWD
Tom Kennerly, Engineering Group, PWD
Josie Gutierrez, New Meter Sales, Finance Group, PWD
Claudia Gallegos, Standby Clerk, Finance Group, PWD
Della Gallegos, Engineering Group, PWD
Richard Zamora, Engineering Group, PWD
Judy Aguilar, Engineering Group, PWD
f/Project 3947
f/Warranty
f/Readers

(INP 138522)

25×10

FILE COPY

# City of Albuquerque

P.O. BOX 1293 ALBUQUERQUE, NEW MEXICO 87103

February 27, 1990

Frank Lovelady
Lovelady & Associates
7408 Morrow, NE
Albuquerque, New Mexico 87110

RE: ENGINEER'S CERTIFICATION FOR PARADISE HILLS CONOCO (C-13/D8) STAMP DATED JANUARY 23, 1990 AND ADDITIONAL INFORMATION RECEIVED FEBRUARY 20, 1990

Dear Mr. Lovelady:

I am in receipt of the additional information requested on my letter to you dated January 30, 1990. Certification for the referenced site is acceptable.

If I can be of further assistance, please feel free to call me at 768-2650.

Cordially,

Bernie J. Montoya

Bernie J. Montoya, C.E.
Engineering Assistant

BJM/bsj
(WP+1107)



25×

RECEIVED
FEB 20 1990
HYDROLOGY SECTION

LOVELADY & ASSOCIATES
7408 MORROW AVE. N.E.
ALBUQUERQUE, N.M. 87110
(505) 883-7973

February 15, 1990

Bernie J. Montoya, C.E.
Engineering Assistant
City of Albuquerque
P.O. Box 1293
Albuquerque, NM 87103

RE: ENGINEERING CERTIFICATION FOR PARADISE HILLS CONOCO (C-13/D-8) DATED JANUARY 23, 1990.

Dear Mr. Montoya:

With regard to your letter of January 30, 1990, the following items that you requested are attached:

1. Copies of letters sent to the N.M.S.H.&T.D. requesting their approval of the connection to the catch basin in the Frontage Road; and, letter of acceptance from Ronald E. Gains, Drainage Engineer, dated 2/9/90. Per telephone conversation with Paul Myers, no further permit is required.

2. Letter from Clifford E. Anderson, Drainage Engineer, A.M.A.F.C.A., dated 2/2/90.

It is requested that the certificate of occupancy for this project be released. If you have any questions regarding this matter, please call me at the above number.

Sincerely,

Frank D. Lovelady

Frank D. Lovelady

Copy - Dura-Bilt Products, Inc.

25×10

Form No. A-110
Rev. 9-87

New Mexico
State Highway and Transportation Department

RECEIVED
FEB 20 1990
HYDROLOGY SECTION

# INTRA-DEPARTMENTAL CORRESPONDENCE

SUBJECT Paradise Hills Conoco Grading and Drainage PlanDATE 2/9/90

FILE REFERENCE:

ATTENTION OF

TO Paul Myers
District 3 Permit Unit

FROM Ronald E. Gaines
Drainage Engineer

As requested, I have reviewed the attached information, which I am returning, concerning the subject project. I found the plan to be acceptable and I would have no objections to you issuing the appropriate permit.

Sincerely,

Ronald E. Gaines

Ronald E. Gaines
Drainage Engineer

REG:ilc

RECEIVED
FEB 12 7 49 AM '90
N.M. STATE HIGH. DEPT.
DISTRICT 3

25×10

Albuquerque
Metropolitan
Arroyo
Flood
Control
Authority
2600 PROSPECT N.E. · ALBUQUERQUE, N.M. 87107
TELEPHONE (505) 884-2219

RECEIVED
FEB 20 1990
HYDROLOGY SECTION

February 2, 1990

Sheet 1 of 1

To: Bernie J. Montoya, CE
Engineering Assistant
Public Works Dept.
City of Albuquerque

From: Clifford E. Anderson, Drainage Engineer
AMAFCA

Re: Paradise Hills Conoco (C-13/D8) Grading and Drainage Plan certified for as-constructed conditions.

AMAFCA has reviewed the above referenced plan certified for as-constructed conditions by Frank D. Lovelady. AMAFCA had previously approved the plan. The certification indicates that the construction is in substantial conformance with the previously approved plan. Therefore, we believe that the construction is in conformance with the North Coors Drainage Management Plan and the minimum standards for discharge to AMAFCA's La Orilla Outlet Channel.

copy to:
Frank Lovelady, Lovelady & Assoc.

25×

LOVELADY & ASSOCIATES
7408 MORROW AVE. N.E.
ALBUQUERQUE, N.M. 87110
(505) 833-7973

February 1, 1990

Don Arp
District Highway Engineer
P.O. Box 91750
Albuquerque, NM 87199

RE: PARADISE HILLS CONOCO (C-13/D-8) GRADING AND DRAINAGE PLAN DATED JANUARY 24, 1990. CONNECTION TO EXISTING STATE HIGHWAY DEPARTMENT CATCH BASIN.

Dear Mr. Arp:

Attached is a print of the referenced plan and pertinent correspondence including the January 30, 1990 letter from Bernie J. Montoya of the City of Albuquerque. Item No. 1 of Mr. Montoya's letter requires approval from the appropriate government agency (N.M.S.H.D.) for construction within their right-of-way. The connection from the sedimentation ponds to the existing catch basin on the frontage road is the subject of this letter.

Initially, the catch basin was thought to be in City right-of-way and a standard block for construction within City right-of-way was shown on the plan. During construction it was discovered that the right-of-way involved was Highway Department right-of-way. The connection has been made according to City standard drawing 2237.

Approval of this connection is requested. A.M.A.F.C.A. approval of the sedimentation basin design is shown in Cliff Anderson's letter of May 9, 1989.

If you require additional information or if you have any questions, please call me at the number listed above.

Sincerely,

Frank D. Lovelady

Frank D. Lovelady

25 x

FILE COPY

# City of Albuquerque

P.O. BOX 1293 ALBUQUERQUE, NEW MEXICO 87103

January 30, 1990

Frank Lovelady
Lovelady & Associates
7408 Morrow NE
Albuquerque, NM 87110

RE: ENGINEER CERTIFICATION FOR PARADISE HILLS CONOCO
(C-13/D8) DATED 1/23/90

Dear Mr. Lovelady:

Based on the information provided on your January 24, 1990 submittal, certification for the above referenced site is acceptable. Prior to final certificate of occupancy release we will need the following items addressed:

1. Copy of the S.O. 19 construction approval from the appropriate government agency for construction within their right-of-way or easements.

2. Concurrence from AMAFCA of the requirements set forth by the Coors Drainage Management Plan.

If I can be of further assistance, please feel free to contact me at 768-2650.

Sincerely,

Bernie J. Montoya

Bernie J. Montoya, CE
Engineering Assistant

BJM:jc
WP+1107



25×10

DRAINAGE INFORMATION SHEET

PROJECT TITLE: PARADISE HILLS CONOCO ZONE ATLAS/DRNG. FILE #: C-13/D-8

LEGAL DESCRIPTION: Lot A-2 of Tract A. of the Thunderbird Partnership

CITY ADDRESS: 9160 Coors Road, N.W.

ENGINEERING FIRM: Lovelady & Associates CONTACT: Frank Lovelady

ADDRESS: 7408 Morrow Ave. NE 87110 PHONE: 883-7973

OWNER: Paradise Hills Conoco CONTACT: Jeff Foss

ADDRESS 4808 Jefferson NE PHONE: 883-9100

ARCHITECT: Dura-Bilt Products, Inc. CONTACT: Jeff Foss

ADDRESS: 4808 Jefferson NE PHONE: 883-9100

SURVEYOR: Lovelady & Associates CONTACT: Frank Lovelady

ADDRESS: 7408 Morrow Ave. N.E. PHONE: 883-7973

CONTRACTOR: Dura Bilt Products, Inc. CONTACT: Jeff Foss

ADDRESS: 4808 Jefferson NE PHONE: 883-9100

PRE-DESIGN MEETING:

X YES

____ NO

X COPY OF CONFERENCE RECAP SHEET PROVIDED WITH ORIGINAL SUBMITTAL

RECEIVED JAN 24 1990 HYDROLOGY SECTION

DRB NO. _____

EPC NO. _____

PROJECT NO. _____

TYPE OF SUBMITTAL:

____ DRAINAGE REPORT

____ DRAINAGE PLAN

____ CONCEPTUAL GRADING & DRAIN. PLAN

____ GRADING PLAN

____ EROSION CONTROL PLAN

X ENGINEER'S CERTIFICATION

CHECK TYPE OF APPROVAL SOUGHT:

____ SKETCH PLAT APPROVAL

____ PRELIMINARY PLAT APPROVAL

____ SITE DEVELOPMENT PLAN APPROVAL

____ FINAL PLAT APPROVAL

____ BUILDING PERMIT APPROVAL

____ FOUNDATION PERMIT APPROVAL

X CERTIFICATE OF OCCUPANCY APPROVAL

____ ROUGH GRADING PERMIT APPROVAL

____ GRADING/PAVING PERMIT APPROVAL

OTHER _____ (SPECIFY)

DATE SUBMITTED: January 24, 1990

BY: Frank D. Lovelady

Frank D. Lovelady, P.E.

Rev. 11/84



25 x

FILE COPY

# CITY OF ALBUQUERQUE
# PUBLIC WORKS DEPARTMENT

ENGINEERING GROUP

INTER-OFFICE CORRESPONDENCE July 31, 1989

TO: Desiderio Salas; Street Maintenance Division

FROM: Fred J. Aguirre, Hydrologist; Engineering Group/PWD

SUBJECT: PRIVATE DRAINAGE FACILITIES WITHIN PUBLIC RIGHTS-OF-WAY/EASEMENT
PARADISE HILLS CONOCO - 9160 COORS ROAD, NW - (C-13/D8)

---

Transmitted herewith, is a copy of the approved drainage plan for the referenced project incorporating the S.O. #19 design.

In accordance with the new process, this plan is being submitted to you for permitting and inspection. Please provide this section with a signed-off copy per the signature block upon construction and acceptance by your office.

As you are aware, the signed-off S.O. #19 is required by this office for Certificate of Occupancy release; hence your expeditious processing of this plan would be greatly appreciated and would avoid any unnecessary delay in the release of the Certificate of Occupancy.

Thank you for your cooperation, and if you should have any questions and/or comments regarding the process, please feel free to call me at 768-2650.

FJA/bsj

Attachment

25 ×

7 0000 0000 1548

FILE COPY

# City of Albuquerque

P.O. BOX 1293 ALBUQUERQUE, NEW MEXICO 87103

KEN SCHULTZ
MAYOR

CLARENCE V. LITHGOW
CHIEF ADMINISTRATIVE OFFICER

DAN WEAKS
DEPUTY CAO PUBLIC SERVICES

FRED E. MONDRAGON
DEPUTY CAO DEVELOPMENT & ENTERPRISE SERVICES

RAY R. BACA
DEPUTY CAO PUBLIC SAFETY

July 21, 1989

Frank Lovelady, P.E.
Lovelady & Associates
7408 Morrow, NE
Albuquerque, New Mexico 87110

RE: REVISED DRAINAGE PLAN FOR PARADISE HILLS CONOCO STATION
(C-13/D8) REVISION DATED JULY 14, 1989

Dear Mr. Lovelady:

Based on the information provided on your submittal of July 14, 1989, the above referenced plan is approved for Building Permit.

Also, a separate permit is required for construction within City right-of-way. A copy of this approval letter must be on hand when applying for the excavation permit.

Engineer Certification will be required prior to Certificate of Occupancy release. Certification is required because of the requirements set forth by AMAFCA's Coors Drainage Management Plan.

Please attach a copy of this plan to the construction sets prior to sign-off by Hydrology.

If I can be of further assistance, please feel free to call me at 768-2650.

Cordially,

Bernie J. Montoya

Bernie J. Montoya, C.E.
Engineering Assistant

xc: Becky Sandoval

BJM/bsj
(WP+1107)



25×10

0000 0000 1549

**DRAINAGE INFORMATION SHEET**

**PROJECT TITLE:** PARADISE HILLS CONOCO COORS & SIPPI ROAD **ZONE ATLAS/DRN. FILE #:** C-13/D-8

**LEGAL DESCRIPTION:** Lot A-2 of Tract A, of the Thunderbird Partnership

**CITY ADDRESS:**

**ENGINEERING FIRM:** Lovelady & Associates **CONTACT:** Frank Lovelady

**ADDRESS:** 7408 Morrow Ave. NE 87110 **PHONE:** 883-7973

**OWNER:** **CONTACT:** Jeff Foss

**ADDRESS** 4808 Jerrerson NE **PHONE:** 883-9100

**ARCHITECT:** Dura-Bilt Products, Inc. **CONTACT:** Jeff Foss

**ADDRESS:** 4808 Jefferson, N.E. **PHONE:** 883-9100

**SURVEYOR:** Lovelady & Associates **CONTACT:** Frank Lovelady

**ADDRESS:** 7408 Morrow Ave. N.E. **PHONE:** 883-7973

**CONTRACTOR:** Dura-Bilt Products, Inc. **CONTACT:** Jeff Foss

**ADDRESS:** 4808 Jefferson, N.E. 87109 **PHONE:** 883-9100

**PRE-DESIGN MEETING:**

X **YES** **DRB NO.**

**NO** **EPC NO.**

**COPY OF CONFERENCE RECAP SHEET PROVIDED** (ORIGINAL SUBMITTAL) **PROJECT NO.**

RECEIVED JUL 14 1989 HYDROLOGY SECTION

**TYPE OF SUBMITTAL:**

- **DRAINAGE REPORT**
- X **DRAINAGE PLAN**
- **CONCEPTUAL GRADING & DRAIN. PLAN**
- **GRADING PLAN**
- **EROSION CONTROL PLAN**
- **ENGINEER'S CERTIFICATION**

**CHECK TYPE OF APPROVAL SOUGHT:**

- **SKETCH PLAT APPROVAL**
- **PRELIMINARY PLAT APPROVAL**
- **SITE DEVELOPMENT PLAN APPROVAL**
- **FINAL PLAT APPROVAL**
- X **BUILDING PERMIT APPROVAL**
- **FOUNDATION PERMIT APPROVAL**
- **CERTIFICATE OF OCCUPANCY APPROVAL**
- **ROUGH GRADING PERMIT APPROVAL**
- **GRADING/PAVING PERMIT APPROVAL**
- **OTHER** **(SPECIFY)**

**DATE SUBMITTED:** July 14, 1989

**BY:** Frank D. Lovelady, P.E.



25x10

0000 0000 1550

FILE COPY

**City of Albuquerque**
P.O. BOX 1293 ALBUQUERQUE, NEW MEXICO 87103

KEN SCHULTZ
MAYOR

May 19, 1989

Frank Lovelady, P.E.
Lovelady & Associates
7408 Morrow, NE
Albuquerque, New Mexico 87110

RE: DRAINAGE PLAN FOR CONOCO STATION
(C-13/D8) RECEIVED MAY 5, 1989

Dear Mr. Lovelady:

Based on the information provided on your submittal of May 5, 1989, listed are some concerns that will need to be addressed prior to final approval.

1. Approved street grades for Sipi Road, along with the work order number will need to be provided within the plan drawing.

2. Location and direction of roof drains.

3. Engineer Certification will be required prior to Certificate of Occupancy release. Certification is required because of the requirements set forth by AMAFCA's Coors Drainage Management Plan.

If I can be of further assistance, please feel free to call me at 768-2650.

Cordially,

Bernie J. Montoya

Bernie J. Montoya, C.E.
Engineering Assistant

BJM/bsj
(WP+1107)



25 x 10

0000 0000 1551

# DRAINAGE INFORMATION SHEET

PROJECT TITLE: CONOCO STATION COOK & SIPI ZONE ATLAS/DRNG. FILE #: C-13/D-8

LEGAL DESCRIPTION: LOT A-2, OF TRACT A, OF THE THUNDERBIRD PARTNERSHIP

CITY ADDRESS:

ENGINEERING FIRM: Lovelady & Associates CONTACT: Frank Lovelady

ADDRESS: 7408 Morrow Ave. NE 87110 PHONE: 883-7973

OWNER: CONTACT: Jeff Foss

ADDRESS 4808 Jefferson NE PHONE: 883-9100

ARCHITECT: Dura-Bilt Products, Inc. CONTACT: Jeff Foss

ADDRESS: 4808 Jefferson, N.E. PHONE: 883-9100

SURVEYOR: Lovelady & Associates (Topo) CONTACT: Frank Lovelady

ADDRESS: 7408 Morrow Ave. N.E. PHONE: 883-7973

CONTRACTOR: Dura-Bilt Products, Inc. CONTACT: Jeff Foss

ADDRESS: 4808 Jefferson N.E. 87109 PHONE: 883-9100

PRE-DESIGN MEETING

X YES

____ NO

X COPY OF CONFERENCE RECAP SHEET PROVIDED

RECEIVED MAY 11 1989 HYDROLOGY SECTION

DRB NO.

EPC NO.

PROJECT NO.

TYPE OF SUBMITTAL:

____ DRAINAGE REPORT

X DRAINAGE PLAN

____ CONCEPTUAL GRADING & DRAIN. PLAN

____ GRADING PLAN

____ EROSION CONTROL PLAN

____ ENGINEER'S CERTIFICATION

X AMAFCA LETTER OF MAY 9, 1989

CHECK TYPE OF APPROVAL SOUGHT:

____ SKETCH PLAT APPROVAL

____ PRELIMINARY PLAT APPROVAL

____ SITE DEVELOPMENT PLAN APPROVAL

____ FINAL PLAT APPROVAL

X BUILDING PERMIT APPROVAL

____ FOUNDATION PERMIT APPROVAL

____ CERTIFICATE OF OCCUPANCY APPROVAL

____ ROUGH GRADING PERMIT APPROVAL

____ GRADING/PAVING PERMIT APPROVAL

OTHER _____ (SPECIFY)

DATE SUBMITTED: April 6, 1989

BY: Frank D. Lovelady

Frank D. Lovelady, P.E.

Rev. 11/84



25 x 10

0000 0000 1552

R. WARD HUNNICUTT, CHAIRMAN
PAT D. HIGDON, VICE-CHAIRMAN
REX FUNK, SECRETARY-TREASURER
DANIEL W. COOK, DIRECTOR
RONALD D. BROWN, DIRECTOR

LARRY A. BLAIR
EXECUTIVE ENGINEER

Albuquerque
Metropolitan
Arroyo
Flood
Control
Authority

2600 PROSPECT N.E. - ALBUQUERQUE, N.M. 87107
TELEPHONE (505) 884-2215

RECEIVED
MAY 11 1989
HYDROLOGY SECTION

May 9, 1989

Mr. Frank D. Lovelady, P.E.
Lovelady and Associates, Inc.
7408 Morrow Avenue NF
Albuquerque, New Mexico 87110

RE: Paradise Hills Conoco, 9160 Coors Road N.W.
(Lot A-2 of Tract "A" of the Thunderbird Partnership)

Dear Mr. Lovelady:

AMAFCA has reviewed the drainage plan for the above referenced project dated May 3, 1989. The plan includes the construction of sediment ponds meeting the sediment control criteria of the North Coors Drainage, La Orilla Outlet. Also, the discharge from the project is in accordance with the North Coors Drainage Management Plan.

AMAFCA therefore approves the Drainage Plan as submitted.

Sincerely,

Clifford E. Anderson, PE & LS
Drainage Engineer

Fred Aguirre, Public Works Department, Hydrology
Subhas Shah, District Engineer, MRGCD

25x10

0000 0000 1553

RECEIVED
MAY 0 3 1989
HYDROLOGY SECTION

Lovelady & Associates
7408 Morrow Ave. N.E.
Albuquerque, NM 87110
May 3, 1989

Cliff Anderson, Drainage Engineer
Albuquerque Metropolitan Arroyo Flood Control Authority
2600 Prospect Ave. N.E.
Albuquerque, NM 87107

RE: PARADISE HILLS CONOCO, 9160 COORS ROAD, N.W. (LOT A-2 OF TRACT "A" OF THE THUNDERBIRD PARTNERSHIP.

Dear Mr. Anderson:

In accordance with the sediment control requirements which you provided during our recent meeting, the referenced plan has been revised to provide sediment control. A print of the plan is attached for your review.

If you have any questions or require additional information, you can contact me at 883-7973.

Sincerely,

Frank D. Lovelady

Frank D. Lovelady, P.E.

25 x

0000 0000 1554

DRAINAGE INFORMATION SHEET

PROJECT TITLE: CONOCO STATION (COORS & SIPI) ZONE ATLAS/DRNG. FILE #: C-13/D-8

LEGAL DESCRIPTION: LOT A-2, OF TRACT A, OF THE THUNDERBIRD PARTNERSHIP

CITY ADDRESS:

ENGINEERING FIRM: Lovelady & Associates CONTACT: Frank Lovelady

ADDRESS: 7408 Morrow Ave. NE 87110 PHONE: 883-7973

OWNER: CONTACT: Jeff Foss

ADDRESS 4808 Jefferson NE PHONE: 883-9100

ARCHITECT: Dura-Bilt Products, Inc. CONTACT: Jeff Foss

ADDRESS: 4808 Jefferson, N.E. PHONE: 883-9100

SURVEYOR: Lovelady & Associates (Topo) CONTACT: Frank Lovelady

ADDRESS: 7408 Morrow Ave. N.E. PHONE: 883-7973

CONTRACTOR: Dura-Bilt Products, Inc. CONTACT: Jeff Foss

ADDRESS: 4808 Jefferson N.E. 87109 PHONE: 883-9100

RECEIVED MAY 6 1989 QUALITY DESIGN SECTION

PRE-DESIGN MEETING:

X YES DRB NO.

NO EPC NO.

X COPY OF CONFERENCE RECAP SHEET PROVIDED PROJECT NO.

RECEIVED MAY 05 1989 HYDROLOGY SECTION

TYPE OF SUBMITTAL:

DRAINAGE REPORT

X DRAINAGE PLAN

CONCEPTUAL GRADING & DRAIN. PLAN

GRADING PLAN

EROSION CONTROL PLAN

ENGINEER'S CERTIFICATION

X Resubmittal w/ Sedimentation

CHECK TYPE OF APPROVAL SOUGHT:

SKETCH PLAT APPROVAL

PRELIMINARY PLAT APPROVAL

SITE DEVELOPMENT PLAN APPROVAL

FINAL PLAT APPROVAL

X BUILDING PERMIT APPROVAL

FOUNDATION PERMIT APPROVAL

CERTIFICATE OF OCCUPANCY APPROVAL

ROUGH GRADING PERMIT APPROVAL

GRADING/PAVING PERMIT APPROVAL

OTHER (SPECIFY)

DATE SUBMITTED: MAY 3 1989

BY: Frank D. Lovelady

Frank D. Lovelady, P.E.

Rev. 11/84 103

0000 0000 1555

CONOCO STATION

DRAINAGE INFORMATION SHE

PROJECT TITLE: COORS & SIPI ZONE ATLAS/DRNG. FILE #: C-13/D-8

LEGAL DESCRIPTION: LOT A-2, OF TRACT A , OF THE THUNDERBIRD PARTNERSHIP

CITY ADDRESS:

ENGINEERING FIRM: Lovelady & Associates CONTACT: Frank Lovelady

ADDRESS: 7408 Morrow Ave. NE 87110 PHONE: 883-7973

OWNER: CONTACT: Jeff Foss

ADDRESS 4808 Jefferson NE PHONE: 883-9100

ARCHITECT: Dura-Bilt Products, Inc. CONTACT: Jeff Foss

ADDRESS: 4808 Jefferson, N.E. PHONE: 883-9100

SURVEYOR: Lovelady & Associates (Topo) CONTACT: Frank Lovelady

ADDRESS: 7408 Morrow Ave. N.E. PHONE: 883-7973

CONTRACTOR: Dura-Bilt Products, Inc. CONTACT: Jeff Foss

ADDRESS: 4808 Jefferson N.E. 87109 PHONE: 883-9100

PRE-DESIGN MEETING:

RECEIVED APR 06 1989 UNDERGROUND SECTION

X YES DRB NO.

NO EPC NO.

X COPY OF CONFERENCE RECAP SHEET PROVIDED PROJECT NO.

TYPE OF SUBMITTAL:

DRAINAGE REPORT

X DRAINAGE PLAN

CONCEPTUAL GRADING & DRAIN. PLAN

GRADING PLAN

EROSION CONTROL PLAN

ENGINEER'S CERTIFICATION

CHECK TYPE OF APPROVAL SOUGHT:

SKETCH PLAT APPROVAL

PRELIMINARY PLAT APPROVAL

SITE DEVELOPMENT PLAN APPROVAL

FINAL PLAT APPROVAL

X BUILDING PERMIT APPROVAL

FOUNDATION PERMIT APPROVAL

CERTIFICATE OF OCCUPANCY APPROVAL

ROUGH GRADING PERMIT APPROVAL

GRADING/PAVING PERMIT APPROVAL

OTHER (SPECIFY)

DATE SUBMITTED: April 6, 1989

BY: Frank D. Lovelady

Frank D. Lovelady, P.E.

Rev. 11/84

103

25 x

0000 0000 1556

CITY OF ALBUQUERQUE
MUNICIPAL DEVELOPMENT DEPARTMENT
ENGINEERING DIVISION/DESIGN HYDROLOGY SECTION

## CONFERENCE RECAP

DRAINAGE FILE/ZONE ATLAS PAGE NO.: C-13 DATE: 4-3-09

PLANNING DIVISION NOS: EPC: _____ DRB: _____

SUBJECT: [illegible]

STREET ADDRESS (IF KNOWN): [illegible]

SUBDIVISION NAME: [illegible]

## APPROVAL REQUESTED:

| | |
|---|---|
| ____ PRELIMINARY PLAT | ____ FINAL PLAT |
| ____ SITE DEVELOPMENT PLAN | X BUILDING PERMIT |
| ____ OTHER | ____ ROUGH GRADING |

| ATTENDANCE: | WHO | REPRESENTING |
|---|---|---|
| | Frank Trujillo | |
| | Carlos A Montoya | |
| | | |

FINDINGS:

1. Drainage plan per DPM
2. Need to follow North Corridor Drainage Management Plan.
3. Support of entry with CIT Ordinance
4. Need to clarify where site flows will be directed
5. Need to consult with Dave Hanson the owner is getting ready on Sage Rd

The undersigned agrees that the above findings are summarized accurately and are only subject to change if further investigation reveals that they are not reasonable or that they are based on inaccurate information.

| | |
|---|---|
| SIGNED: Carlos A Montoya | SIGNED: Frank Trujillo |
| TITLE: | TITLE: |
| DATE: 4-3-09 | DATE: 4-3-09 |

**NOTE** PLEASE PROVIDE A COPY OF THIS RECAP WITH THE DRAINAGE SUBMITTAL

SEDIMENT CONTROL CALCULATIONS.:

PER M.R.G.C.D. REQUIREMENTS OBTAINED BY TELEPHONE FROM CLIFF ANDERSON, AMAFCA, THE FOLLOWING SEDIMENT CONTROL MEASURES ARE APPLICABLE.

1. MINIMUM POND STORAGE FOR SEDIMENT IS 0.0024 ACRE·FEET / ACRE OF UPSTREAM DRAINAGE BASIN.

   0.5949 ACRE X 0.0024 ACRE·FEET/ACRE = 0.00143 AF

   0.00143 X 43560 = 62 CF.

2. VELOCITY OF SEDIMENT FALL IS 0.002 FT/SEC AT 50% of $Q_{100}$

   POND AREA = 50% ($Q_{100}$) / 0.002

   = 1.12/0.002 = 560 SQ.FT.

3. THE MAXIMUM HORIZONTAL VELOCITY IN SEDIMENT POND IS 0.15 FT./SEC AT 50% ($Q_{100}$)

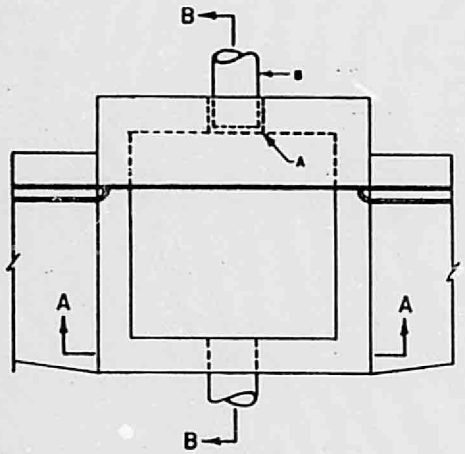


PLAN

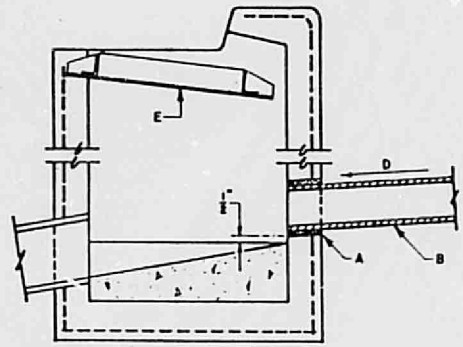


SECTION B-B

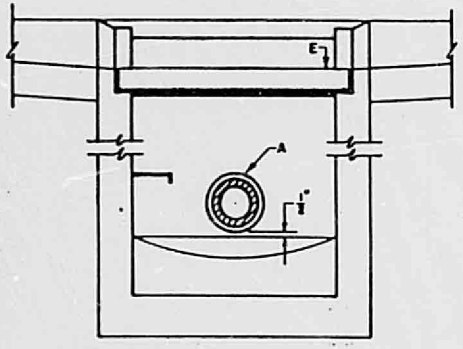


SECTION A-A

## GENERAL NOTES:

1. THE CITY DOES NOT ACCEPT RESPONSIBILITY FOR MAINTENANCE FOR ANY DRAIN LINES INSTALLED BY OR FOR PRIVATE PROPERTY OWNERS.
2. FOR DOUBLE "C" OR "D" STORM INLETS THE PRIVATE DRAIN LINE CONNECTION MUST BE ALIGNED WITH THE LONGITUDINAL CENTER OF EITHER GRATE FRAME.

## CONSTRUCTION NOTES:

A. CORE DRILL INTO BACK OF EXIST. CATCH BASIN WITH INVERT OF DRILLED OPENING 2" ABOVE EXIST. CONC. FILL. GROUT WITH NONSHRINK, NONMETALLIC GROUT.

B. NEW DRAIN LINE TO BE SCH. 40 P.V.C., REIN. CONC. OR DUCTILE IRON PIPE. DRAIN SIZE TO BE AT LEAST ONE SIZE SMALLER THAN OUTLET PIPE WITH A MAX. SIZE OF 12".

C. EXIST. CONC. FILL.

D. SLOPE .02 FT.PER FT.MIN.WITHIN R.O.W.

E. FRAME & GRATE.

| REVISIONS | CITY OF ALBUQUERQUE |
|---|---|
| | DRAINAGE<br>DRAIN LINE CONNECTION<br>TO EXIST. STORM INLET<br>DWG. 2237 AUG. 1986 |

0000 0000 1559

PLANS/PLATS ON FILE

FILE DESC: C13/D8

# PLANS/PLATS 1

35 x 10

0000 0000 1560

PUBLIC WORKS/HYDROLOGY

C13/D8

0000 0000 1531

C13/D8

25×10

0000 0000 1538

**City of Albuquerque**
P.O. BOX 1293 ALBUQUERQUE, NEW MEXICO 87103

C13/D8

RECEIVED
FEB 14 1990
HYDROLOGY SECTION

February 12, 1990

CERTIFICATE OF COMPLETION AND ACCEPTANCE

Mr. Wally Sedden
Duke City Distributors
3203 Broadway S.E.
Albuquerque, NM 87105

RE: PROJECT NO. 3947, PARADISE HILLS CONOCO, (MAP NO. C-13)

Dear Mr. Sedden:

This is to certify that the City of Albuquerque accepts Project No. 3947 as being completed according to approved plans and construction specifications. The City of Albuquerque will accept for continuous maintenance all public infrastructure improvements constructed as part of Project No. 3947.

The project is described as follows:

- Installed 110' of 14" DIP water line to serve the Paradise Hills Conoco Station on the east side of Coors Rd. one (1) block south of Paseo Del Norte. Also installed one (1) fire hydrant and 1" service.

- The contractor's correction period begins the date of this letter and will be effective for a period of one (1) year.

Sincerely,

Brian L. Speicher, P.E.
Chief Construction Engineer
Design/Construction Division
Engineering Group
Public Works Department

BLS:kt



25x10

0000 0000 1539



xc: Bohannan-Huston, Inc.
Fred Myers Excavation Contractors
Fred Aguirre, Engineering Group, PWD
Phil Fischer, Engineering Group, PWD
Ray Pang, Engineering Group, PWD
Terri Martin, Engineering Group, PWD
Jeanette Barrett, Special Assessments
Sam Hall, Operations Group, PWD
A. N. Gaume, Operations Group, PWD
Jim Fink, Operations Group, PWD
Ray Chavez, Engineering Group, PWD
Jon Ertsgaard, Water/Wastewater Group, PWD
Dave Parks, Engineering Group, PWD
Tom Kennerly, Engineering Group, PWD
Josie Gutierrez, New Meter Sales, Finance Group, PWD
Claudia Gallegos, Standby Clerk, Finance Group, PWD
Della Gallegos, Engineering Group, PWD
Richard Zamora, Engineering Group, PWD
Judy Aguilar, Engineering Group, PWD
f/Project 3947
f/Warranty
f/Readers

(INP 138522)

25×10

0000 0000 1540

FILE COPY

# City of Albuquerque

P.O. BOX 1293 ALBUQUERQUE, NEW MEXICO 87103

February 27, 1990

Frank Lovelady
Lovelady & Associates
7408 Morrow, NE
Albuquerque, New Mexico 87110

RE: ENGINEER'S CERTIFICATION FOR PARADISE HILLS CONOCO (C-13/D8) STAMP DATED JANUARY 23, 1990 AND ADDITIONAL INFORMATION RECEIVED FEBRUARY 20, 1990

Dear Mr. Lovelady:

I am in receipt of the additional information requested on my letter to you dated January 30, 1990. Certification for the referenced site is acceptable.

If I can be of further assistance, please feel free to call me at 768-2650.

Cordially,

Bernie J. Montoya

Bernie J. Montoya, C.E.
Engineering Assistant

BJM/bsj
(WP+1107)



25×10

0000 0000 1541

RECEIVED
FEB 20 1990
HYDROLOGY SECTION

LOVELADY & ASSOCIATES
7408 MORROW AVE. N.E.
ALBUQUERQUE, N.M. 87110
(505) 883-7973

February 15, 1990

Bernie J. Montoya, C.E.
Engineering Assistant
City of Albuquerque
P.O. Box 1293
Albuquerque, NM 87103

RE: ENGINEERING CERTIFICATION FOR PARADISE HILLS CONOCO (C-13/D-8) DATED JANUARY 23, 1990.

Dear Mr. Montoya:

With regard to your letter of January 30, 1990, the following items that you requested are attached:

1. Copies of letters sent to the N.M.S.H.&T.D. requesting their approval of the connection to the catch basin in the Frontage Road; and, letter of acceptance from Ronald E. Gains, Drainage Engineer, dated 2/9/90. Per telephone conversation with Paul Myers, no further permit is required.

2. Letter from Clifford E. Anderson, Drainage Engineer, A.M.A.F.C.A., dated 2/2/90.

It is requested that the certificate of occupancy for this project be released. If you have any questions regarding this matter, please call me at the above number.

Sincerely,

Frank D. Lovelady

Frank D. Lovelady

Copy - Dura-Bilt Products, Inc.

25×10

0000 0000 1542

Form No. A-110
Rev. 9-87

New Mexico
State Highway and Transportation Department

RECEIVED
FEB 20 1990
HYDROLOGY SECTION

# INTRA-DEPARTMENTAL CORRESPONDENCE

SUBJECT Paradise Hills Conoco Grading and Drainage PlanDATE 2/9/90

FILE REFERENCE:

ATTENTION OF

TO Paul Myers
District 3 Permit Unit

FROM Ronald E. Gaines
Drainage Engineer

As requested, I have reviewed the attached information, which I am returning, concerning the subject project. I found the plan to be acceptable and I would have no objections to you issuing the appropriate permit.

Sincerely,

Ronald E. Gaines

Ronald E. Gaines
Drainage Engineer

REG:ilc

RECEIVED
FEB 12 7 49 AM '90
N.M. STATE HIGH. DEPT.

25×10

0000 0000 1543

Albuquerque
Metropolitan
Arroyo
Flood
Control
Authority
2600 PROSPECT N.E. · ALBUQUERQUE, N.M. 87107
TELEPHONE (505) 884-2219

RECEIVED
FEB 20 1990
HYDROLOGY SECTION

February 2, 1990

Sheet 1 of 1

To: Bernie J. Montoya, CE
Engineering Assistant
Public Works Dept.
City of Albuquerque

From: Clifford E. Anderson, Drainage Engineer
AMAFCA

Re: Paradise Hills Conoco (C-13/D8) Grading and Drainage Plan certified for as-constructed conditions.

AMAFCA has reviewed the above referenced plan certified for as-constructed conditions by Frank D. Lovelady. AMAFCA had previously approved the plan. The certification indicates that the construction is in substantial conformance with the previously approved plan. Therefore, we believe that the construction is in conformance with the North Coors Drainage Management Plan and the minimum standards for discharge to AMAFCA's La Orilla Outlet Channel.

copy to:
Frank Lovelady, Lovelady & Assoc.

25×10

0000 0000 1544

LOVELADY & ASSOCIATES
7408 MORROW AVE. N.E.
ALBUQUERQUE, N.M. 87110
(505) 833-7973

February 1, 1990

Don Arp
District Highway Engineer
P.O. Box 91750
Albuquerque, NM 87199

RE: PARADISE HILLS CONOCO (C-13/D-8) GRADING AND DRAINAGE PLAN DATED JANUARY 24, 1990. CONNECTION TO EXISTING STATE HIGHWAY DEPARTMENT CATCH BASIN.

Dear Mr. Arp:

Attached is a print of the referenced plan and pertinent correspondence including the January 30, 1990 letter from Bernie J. Montoya of the City of Albuquerque. Item No. 1 of Mr. Montoya's letter requires approval from the appropriate government agency (N.M.S.H.D.) for construction within their right-of-way. The connection from the sedimentation ponds to the existing catch basin on the frontage road is the subject of this letter.

Initially, the catch basin was thought to be in City right-of-way and a standard block for construction within City right-of-way was shown on the plan. During construction it was discovered that the right-of-way involved was Highway Department right-of-way. The connection has been made according to City standard drawing 2237.

Approval of this connection is requested. A.M.A.F.C.A. approval of the sedimentation basin design is shown in Cliff Anderson's letter of May 9, 1989.

If you require additional information or if you have any questions, please call me at the number listed above.

Sincerely,

Frank D. Lovelady

Frank D. Lovelady

25×

0000 0000 1545

FILE COPY

**City of Albuquerque**
P.O. BOX 1293 ALBUQUERQUE, NEW MEXICO 87103

January 30, 1990

Frank Lovelady
Lovelady & Associates
7408 Morrow NE
Albuquerque, NM 87110

RE: ENGINEER CERTIFICATION FOR PARADISE HILLS CONOCO
(C-13/D8) DATED 1/23/90

Dear Mr. Lovelady:

Based on the information provided on your January 24, 1990 submittal, certification for the above referenced site is acceptable. Prior to final certificate of occupancy release we will need the following items addressed:

1. Copy of the S.O. 19 construction approval from the appropriate government agency for construction within their right-of-way or easements.

2. Concurrence from AMAFCA of the requirements set forth by the Coors Drainage Management Plan.

If I can be of further assistance, please feel free to contact me at 768-2650.

Sincerely,

Bernie J. Montoya

Bernie J. Montoya, CE
Engineering Assistant

BJM:jc
WP+1107



25×10

0000 0000 1546

# DRAINAGE INFORMATION SHEET

PROJECT TITLE: PARADISE HILLS CONOCO ZONE ATLAS/DRNG. FILE #: C-13/D-8

LEGAL DESCRIPTION: Lot A-2 of Tract A. of the Thunderbird Partnership

CITY ADDRESS: 9160 Coors Road, N.W.

ENGINEERING FIRM: Lovelady & Associates CONTACT: Frank Lovelady

ADDRESS: 7408 Morrow Ave. NE 87110 PHONE: 883-7973

OWNER: Paradise Hills Conoco CONTACT: Jeff Foss

ADDRESS 4808 Jefferson NE PHONE: 883-9100

ARCHITECT: Dura-Bilt Products, Inc. CONTACT: Jeff Foss

ADDRESS: 4808 Jefferson NE PHONE: 883-9100

SURVEYOR: Lovelady & Associates CONTACT: Frank Lovelady

ADDRESS: 7408 Morrow Ave. N.E. PHONE: 883-7973

CONTRACTOR: Dura Bilt Products, Inc. CONTACT: Jeff Foss

ADDRESS: 4808 Jefferson NE PHONE: 883-9100

PRE-DESIGN MEETING:

RECEIVED
JAN 2 4 1990
HYDROLOGY SECTION

X YES

____ NO

X COPY OF CONFERENCE RECAP SHEET PROVIDED WITH ORIGINAL SUBMITTAL

DRB NO. _____

EPC NO. _____

PROJECT NO. _____

TYPE OF SUBMITTAL:

____ DRAINAGE REPORT

____ DRAINAGE PLAN

____ CONCEPTUAL GRADING & DRAIN. PLAN

____ GRADING PLAN

____ EROSION CONTROL PLAN

X ENGINEER'S CERTIFICATION

CHECK TYPE OF APPROVAL SOUGHT:

____ SKETCH PLAT APPROVAL

____ PRELIMINARY PLAT APPROVAL

____ SITE DEVELOPMENT PLAN APPROVAL

____ FINAL PLAT APPROVAL

____ BUILDING PERMIT APPROVAL

____ FOUNDATION PERMIT APPROVAL

X CERTIFICATE OF OCCUPANCY APPROVAL

____ ROUGH GRADING PERMIT APPROVAL

____ GRADING/PAVING PERMIT APPROVAL

OTHER _____ (SPECIFY)

DATE SUBMITTED: January 24, 1990

BY: Frank D. Lovelady
Frank D. Lovelady, P.E.

Rev. 11/84



25×10

0000 0000 1547

FILE COPY

# CITY OF ALBUQUERQUE
# PUBLIC WORKS DEPARTMENT

ENGINEERING GROUP

INTER-OFFICE CORRESPONDENCE July 31, 1989

TO: Desiderio Salas; Street Maintenance Division

FROM: Fred J. Aguirre, Hydrologist; Engineering Group/PWD

SUBJECT: PRIVATE DRAINAGE FACILITIES WITHIN PUBLIC RIGHTS-OF-WAY/EASEMENT
PARADISE HILLS CONOCO - 9160 COORS ROAD, NW - (C-13/D8)

Transmitted herewith, is a copy of the approved drainage plan for the referenced project incorporating the S.O. #19 design.

In accordance with the new process, this plan is being submitted to you for permitting and inspection. Please provide this section with a signed-off copy per the signature block upon construction and acceptance by your office.

As you are aware, the signed-off S.O. #19 is required by this office for Certificate of Occupancy release; hence your expeditious processing of this plan would be greatly appreciated and would avoid any unnecessary delay in the release of the Certificate of Occupancy.

Thank you for your cooperation, and if you should have any questions and/or comments regarding the process, please feel free to call me at 768-2650.

FJA/bsj

Attachment

25×

0000 0000 1548

FILE COPY

# City of Albuquerque

P.O. BOX 1293 ALBUQUERQUE, NEW MEXICO 87103

KEN SCHULTZ
MAYOR

CLARENCE V. LITHGOW
CHIEF ADMINISTRATIVE OFFICER

DAN WEAKS
DEPUTY CAO PUBLIC SERVICES

FRED E. MONDRAGON
DEPUTY CAO DEVELOPMENT & ENTERPRISE SERVICES

RAY R. BACA
DEPUTY CAO PUBLIC SAFETY

July 21, 1989

Frank Lovelady, P.E.
Lovelady & Associates
7408 Morrow, NE
Albuquerque, New Mexico 87110

RE: REVISED DRAINAGE PLAN FOR PARADISE HILLS CONOCO STATION
(C-13/D8) REVISION DATED JULY 14, 1989

Dear Mr. Lovelady:

Based on the information provided on your submittal of July 14, 1989, the above referenced plan is approved for Building Permit.

Also, a separate permit is required for construction within City right-of-way. A copy of this approval letter must be on hand when applying for the excavation permit.

Engineer Certification will be required prior to Certificate of Occupancy release. Certification is required because of the requirements set forth by AMAFCA's Coors Drainage Management Plan.

Please attach a copy of this plan to the construction sets prior to sign-off by Hydrology.

If I can be of further assistance, please feel free to call me at 768-2650.

Cordially,

Bernie J. Montoya

Bernie J. Montoya, C.E.
Engineering Assistant

xc: Becky Sandoval

BJM/bsj
(WP+1107)



25×10

0000 0000 1549

## DRAINAGE INFORMATION SHEET

PROJECT TITLE: PARADISE HILLS CONOCO COORS & SIPPI ROAD ZONE ATLAS/DRN. FILE #: C-13/D-8

LEGAL DESCRIPTION: Lot A-2 of Tract A, of the Thunderbird Partnership

CITY ADDRESS:

ENGINEERING FIRM: Lovelady & Associates CONTACT: Frank Lovelady

ADDRESS: 7408 Morrow Ave. NE 87110 PHONE: 883-7973

OWNER: CONTACT: Jeff Foss

ADDRESS 4808 Jerrerson NE PHONE: 883-9100

ARCHITECT: Dura-Bilt Products, Inc. CONTACT: Jeff Foss

ADDRESS: 4808 Jefferson, N.E. PHONE: 883-9100

SURVEYOR: Lovelady & Associates CONTACT: Frank Lovelady

ADDRESS: 7408 Morrow Ave. N.E. PHONE: 883-7973

CONTRACTOR: Dura-Bilt Products, Inc. CONTACT: Jeff Foss

ADDRESS: 4808 Jefferson, N.E. 87109 PHONE: 883-9100

PRE-DESIGN MEETING:

X YES

____ NO

____ COPY OF CONFERENCE RECAP SHEET PROVIDED

RECEIVED JUL 14 1989 HYDROLOGY SECTION

DRB NO.

EPC NO.

PROJECT NO.

(ORIGINAL SUBMITTAL)

TYPE OF SUBMITTAL:

____ DRAINAGE REPORT

X DRAINAGE PLAN

____ CONCEPTUAL GRADING & DRAIN. PLAN

____ GRADING PLAN

____ EROSION CONTROL PLAN

____ ENGINEER'S CERTIFICATION

CHECK TYPE OF APPROVAL SOUGHT:

____ SKETCH PLAT APPROVAL

____ PRELIMINARY PLAT APPROVAL

____ SITE DEVELOPMENT PLAN APPROVAL

____ FINAL PLAT APPROVAL

X BUILDING PERMIT APPROVAL

____ FOUNDATION PERMIT APPROVAL

____ CERTIFICATE OF OCCUPANCY APPROVAL

____ ROUGH GRADING PERMIT APPROVAL

____ GRADING/PAVING PERMIT APPROVAL

OTHER _____ (SPECIFY)

DATE SUBMITTED: July 14, 1989

BY: Frank D. Lovelady, P.E.

Rev. 11/84



25 x 10

0000 0000 1550

FILE COPY

**City of Albuquerque**
P.O. BOX 1293 ALBUQUERQUE, NEW MEXICO 87103

KEN SCHULTZ
MAYOR

May 19, 1989

Frank Lovelady, P.E.
Lovelady & Associates
7408 Morrow, NE
Albuquerque, New Mexico 87110

RE: DRAINAGE PLAN FOR CONOCO STATION
(C-13/D8) RECEIVED MAY 5, 1989

Dear Mr. Lovelady:

Based on the information provided on your submittal of May 5, 1989, listed are some concerns that will need to be addressed prior to final approval.

1. Approved street grades for Sipi Road, along with the work order number will need to be provided within the plan drawing.

2. Location and direction of roof drains.

3. Engineer Certification will be required prior to Certificate of Occupancy release. Certification is required because of the requirements set forth by AMAFCA's Coors Drainage Management Plan.

If I can be of further assistance, please feel free to call me at 768-2650.

Cordially,

Bernie J. Montoya

Bernie J. Montoya, C.E.
Engineering Assistant

BJM/bsj
(WP+1107)



25×10

0000 0000 1551

DRAINAGE INFORMATION SHEET

PROJECT TITLE: CONOCO STATION COOK & SIPI ZONE ATLAS/DRNG. FILE #: C-13/D-8

LEGAL DESCRIPTION: LOT A-2, OF TRACT A, OF THE THUNDERBIRD PARTNERSHIP

CITY ADDRESS:

ENGINEERING FIRM: Lovelady & Associates CONTACT: Frank Lovelady

ADDRESS: 7408 Morrow Ave. NE 87110 PHONE: 883-7973

OWNER: CONTACT: Jeff Foss

ADDRESS 4808 Jefferson NE PHONE: 883-9100

ARCHITECT: Dura-Bilt Products, Inc. CONTACT: Jeff Foss

ADDRESS: 4808 Jefferson, N.E. PHONE: 883-9100

SURVEYOR: Lovelady & Associates (Topo) CONTACT: Frank Lovelady

ADDRESS: 7408 Morrow Ave. N.E. PHONE: 883-7973

CONTRACTOR: Dura-Bilt Products, Inc. CONTACT: Jeff Foss

ADDRESS: 4808 Jefferson N.E. 87109 PHONE: 883-9100

PRE-DESIGN MEETING

X YES

___ NO

X COPY OF CONFERENCE RECAP SHEET PROVIDED

RECEIVED MAY 11 1989 HYDROLOGY SECTION

DRB NO.

EPC NO.

PROJECT NO.

TYPE OF SUBMITTAL:

___ DRAINAGE REPORT

X DRAINAGE PLAN

___ CONCEPTUAL GRADING & DRAIN. PLAN

___ GRADING PLAN

___ EROSION CONTROL PLAN

___ ENGINEER'S CERTIFICATION

X AMAFCA LETTER OF MAY 9, 1989

CHECK TYPE OF APPROVAL SOUGHT:

___ SKETCH PLAT APPROVAL

___ PRELIMINARY PLAT APPROVAL

___ SITE DEVELOPMENT PLAN APPROVAL

___ FINAL PLAT APPROVAL

X BUILDING PERMIT APPROVAL

___ FOUNDATION PERMIT APPROVAL

___ CERTIFICATE OF OCCUPANCY APPROVAL

___ ROUGH GRADING PERMIT APPROVAL

___ GRADING/PAVING PERMIT APPROVAL

OTHER _____ (SPECIFY)

DATE SUBMITTED: April 6, 1989

BY: Frank D. Lovelady

Frank D. Lovelady, P.E.

Rev. 11/84

103

25 x 10

0000 0000 1552

R. WARD HUNNICUTT, CHAIRMAN
PAT D. HIGDON, VICE-CHAIRMAN
REX FUNK, SECRETARY-TREASURER
DANIEL W. COOK, DIRECTOR
RONALD D. BROWN, DIRECTOR

LARRY A. BLAIR
EXECUTIVE ENGINEER

Albuquerque
Metropolitan
Arroyo
Flood
Control
Authority

2600 PROSPECT N.E. - ALBUQUERQUE, N.M. 87107
TELEPHONE (505) 884-2215

RECEIVED
MAY 1 1 1989
HYDROLOGY SECTION

May 9, 1989

Mr. Frank D. Lovelady, P.E.
Lovelady and Associates, Inc.
7408 Morrow Avenue NE
Albuquerque, New Mexico 87110

RE: Paradise Hills Conoco, 9160 Coors Road N.W.
(Lot A-2 of Tract "A" of the Thunderbird Partnership)

Dear Mr. Lovelady:

AMAFCA has reviewed the drainage plan for the above referenced project dated May 3, 1989. The plan includes the construction of sediment ponds meeting the sediment control criteria of the North Coors Drainage, La Orilla Outlet. Also, the discharge from the project is in accordance with the North Coors Drainage Management Plan.

AMAFCA therefore approves the Drainage Plan as submitted.

Sincerely,

Clifford E. Anderson, PE & LS
Drainage Engineer

Fred Aguirre, Public Works Department, Hydrology
Subhas Shah, District Engineer, MRGCD

25×10

0000 0000 1553

RECEIVED
MAY 0 5 1989
HYDROLOGY SECTION

Lovelady & Associates
7408 Morrow Ave. N.E.
Albuquerque, NM 87110
May 3, 1989

Cliff Anderson, Drainage Engineer
Albuquerque Metropolitan Arroyo Flood Control Authority
2600 Prospect Ave. N.E.
Albuquerque, NM 87107

RE: PARADISE HILLS CONOCO, 9160 COORS ROAD, N.W. (LOT A-2 OF TRACT "A" OF THE THUNDERBIRD PARTNERSHIP.

Dear Mr. Anderson:

In accordance with the sediment control requirements which you provided during our recent meeting, the referenced plan has been revised to provide sediment control. A print of the plan is attached for your review.

If you have any questions or require additional information, you can contact me at 883-7973.

Sincerely,

Frank D. Lovelady

Frank D. Lovelady, P.E.

25×10

0000 0000 1554

DRAINAGE INFORMATION SHEET

PROJECT TITLE: CONOCO STATION (COORS & SIPI) ZONE ATLAS/DRNG. FILE #: C-13/D-8

LEGAL DESCRIPTION: LOT A-2, OF TRACT A, OF THE THUNDERBIRD PARTNERSHIP

CITY ADDRESS:

ENGINEERING FIRM: Lovelady & Associates CONTACT: Frank Lovelady

ADDRESS: 7408 Morrow Ave. NE 87110 PHONE: 883-7973

OWNER: CONTACT: Jeff Foss

ADDRESS 4808 Jefferson NE PHONE: 883-9100

ARCHITECT: Dura-Bilt Products, Inc. CONTACT: Jeff Foss

ADDRESS: 4808 Jefferson, N.E. PHONE: 883-9100

SURVEYOR: Lovelady & Associates (Topo) CONTACT: Frank Lovelady

ADDRESS: 7408 Morrow Ave. N.E. PHONE: 883-7973

CONTRACTOR: Dura-Bilt Products, Inc. CONTACT: Jeff Foss

ADDRESS: 4808 Jefferson N.E. 87109 PHONE: 883-9100

RECEIVED MAY 6 1989 QUALITY DESIGN SECTION

PRE-DESIGN MEETING:

X YES

___ NO

X COPY OF CONFERENCE RECAP SHEET PROVIDED

RECEIVED MAY 04 1989 HYDROLOGY SECTION

DRB NO.

EPC NO.

PROJECT NO.

TYPE OF SUBMITTAL:

___ DRAINAGE REPORT

X DRAINAGE PLAN

___ CONCEPTUAL GRADING & DRAIN. PLAN

___ GRADING PLAN

___ EROSION CONTROL PLAN

___ ENGINEER'S CERTIFICATION

X Resubmittal w/ Sedimentation

CHECK TYPE OF APPROVAL SOUGHT:

___ SKETCH PLAT APPROVAL

___ PRELIMINARY PLAT APPROVAL

___ SITE DEVELOPMENT PLAN APPROVAL

___ FINAL PLAT APPROVAL

X BUILDING PERMIT APPROVAL

___ FOUNDATION PERMIT APPROVAL

___ CERTIFICATE OF OCCUPANCY APPROVAL

___ ROUGH GRADING PERMIT APPROVAL

___ GRADING/PAVING PERMIT APPROVAL

OTHER _____ (SPECIFY)

DATE SUBMITTED: MAY 3 1989

BY: Frank D. Lovelady
Frank D. Lovelady, P.E.

Rev. 11/84

103

25x10

0000 0000 1555

DRAINAGE INFORMATION SHEET

CONOCO STATION

PROJECT TITLE: COORS & SIPI ZONE ATLAS/DRNG. FILE #: C-13/D-8

LEGAL DESCRIPTION: LOT A-2, OF TRACT A , OF THE THUNDERBIRD PARTNERSHIP

CITY ADDRESS:

ENGINEERING FIRM: Lovelady & Associates CONTACT: Frank Lovelady

ADDRESS: 7408 Morrow Ave. NE 87110 PHONE: 883-7973

OWNER: CONTACT: Jeff Foss

ADDRESS 4808 Jefferson NE PHONE: 883-9100

ARCHITECT: Dura-Bilt Products, Inc. CONTACT: Jeff Foss

ADDRESS: 4808 Jefferson, N.E. PHONE: 883-9100

SURVEYOR: Lovelady & Associates (Topo) CONTACT: Frank Lovelady

ADDRESS: 7408 Morrow Ave. N.E. PHONE: 883-7973

CONTRACTOR: Dura-Bilt Products, Inc. CONTACT: Jeff Foss

ADDRESS: 4808 Jefferson N.E. 87109 PHONE: 883-9100

PRE-DESIGN MEETING:

X YES

___ NO

X COPY OF CONFERENCE RECAP SHEET PROVIDED

RECEIVED APR 06 1989 HYDROLOGY SECTION

DRB NO.

EPC NO.

PROJECT NO.

TYPE OF SUBMITTAL:

___ DRAINAGE REPORT

X DRAINAGE PLAN

___ CONCEPTUAL GRADING & DRAIN. PLAN

___ GRADING PLAN

___ EROSION CONTROL PLAN

___ ENGINEER'S CERTIFICATION

CHECK TYPE OF APPROVAL SOUGHT:

___ SKETCH PLAT APPROVAL

___ PRELIMINARY PLAT APPROVAL

___ SITE DEVELOPMENT PLAN APPROVAL

___ FINAL PLAT APPROVAL

X BUILDING PERMIT APPROVAL

___ FOUNDATION PERMIT APPROVAL

___ CERTIFICATE OF OCCUPANCY APPROVAL

___ ROUGH GRADING PERMIT APPROVAL

___ GRADING/PAVING PERMIT APPROVAL

OTHER _____ (SPECIFY)

DATE SUBMITTED: April 6, 1989

BY: Frank D. Lovelady

Frank D. Lovelady, P.E.

Rev. 11/84

103

25 × 10

0000 0000 1556

CITY OF ALBUQUERQUE
MUNICIPAL DEVELOPMENT DEPARTMENT
ENGINEERING DIVISION/DESIGN HYDROLOGY SECTION

CONFERENCE RECAP

DRAINAGE FILE/ZONE ATLAS PAGE NO.: C13 DATE: 4-3-89

PLANNING DIVISION NOS: EPC: _____ DRB: _____

SUBJECT: [illegible]

STREET ADDRESS (IF KNOWN): [illegible]

SUBDIVISION NAME: [illegible]

APPROVAL REQUESTED:

| | |
|---|---|
| ____ PRELIMINARY PLAT | ____ FINAL PLAT |
| ____ SITE DEVELOPMENT PLAN | X BUILDING PERMIT |
| ____ OTHER | ____ ROUGH GRADING |

| ATTENDANCE: WHO | REPRESENTING |
|---|---|
| Frank [illegible] | |
| Carl H [illegible] | |
| | |

FINDINGS:

1. Drainage plan per DPM
2. Need to follow North Cons. Drainage Management Plan.
3. Support a meeting with CH Addition
4. Need to address where site flows will be directed
5. Need to consult with Dave Hanson to work in further agreement on Sign Rd.

The undersigned agrees that the above findings are summarized accurately and are only subject to change if further investigation reveals that they are not reasonable or that they are based on inaccurate information.

| | |
|---|---|
| SIGNED: Carl H [illegible] | SIGNED: Frank [illegible] |
| TITLE: | TITLE: |
| DATE: 4-3-89 | DATE: 4-3-89 |

**NOTE** PLEASE PROVIDE A COPY OF THIS RECAP WITH THE DRAINAGE SUBMITTAL

25x10

SEDIMENT CONTROL CALCULATIONS.:

PER M.R.G.C.D. REQUIREMENTS OBTAINED BY TELEPHONE FROM CLIFF ANDERSON, AMAFCA, THE FOLLOWING SEDIMENT CONTROL MEASURES ARE APPLICABLE.

1. MINIMUM POND STORAGE FOR SEDIMENT IS 0.0024 ACRE-FEET/ACRE OF UPSTREAM DRAINAGE BASIN.

   0.5949 ACRE X 0.0024 ACRE-FEET/ACRE = 0.00143 AF

   0.00143 X 43560 = 62 CF.

2. VELOCITY OF SEDIMENT FALL IS 0.002 FT/SEC AT 50% of $Q_{100}$

   POND AREA = 50% ($Q_{100}$) / 0.002

   = 1.12/0.002 = 560 SQ.FT.

3. THE MAXIMUM HORIZONTAL VELOCITY IN SEDIMENT POND IS 0.15 FT./SEC AT 50% ($Q_{100}$)

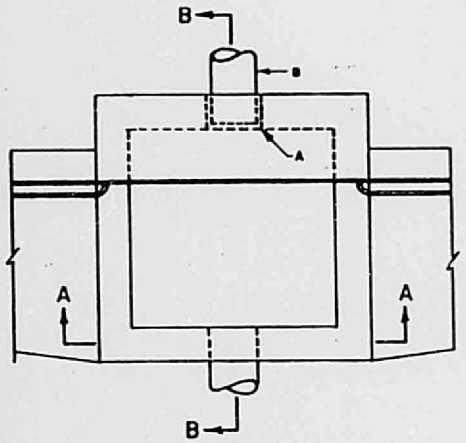


PLAN

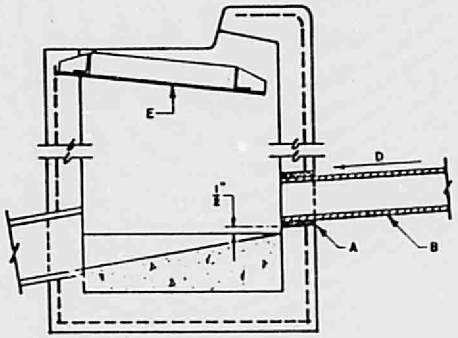


SECTION B-B

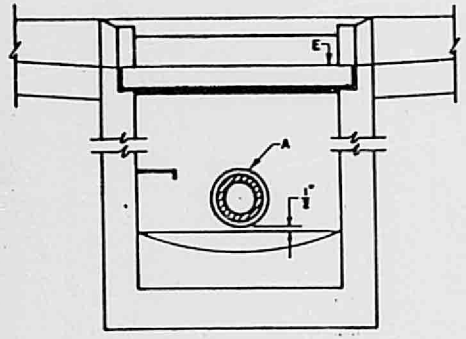


SECTION A-A

## GENERAL NOTES:

1. THE CITY DOES NOT ACCEPT RESPONSIBILITY FOR MAINTENANCE FOR ANY DRAIN LINES INSTALLED BY OR FOR PRIVATE PROPERTY OWNERS.
2. FOR DOUBLE "C" OR "D" STORM INLETS THE PRIVATE DRAIN LINE CONNECTION MUST BE ALIGNED WITH THE LONGITUDINAL CENTER OF EITHER GRATE FRAME.

## CONSTRUCTION NOTES:

A. CORE DRILL INTO BACK OF EXIST. CATCH BASIN WITH INVERT OF DRILLED OPENING 2" ABOVE EXIST. CONC. FILL. GROUT WITH NONSHRINK, NONMETALLIC GROUT.

B. NEW DRAIN LINE TO BE SCH. 40 P.V.C., REIN. CONC. OR DUCTILE IRON PIPE. DRAIN SIZE TO BE AT LEAST ONE SIZE SMALLER THAN OUTLET PIPE WITH A MAX. SIZE OF 12".

C. EXIST. CONC. FILL.

D. SLOPE .02 FT.PER FT.MIN.WITHIN R.O.W.

E. FRAME & GRATE.

| REVISIONS | CITY OF ALBUQUERQUE |
|---|---|
| | DRAINAGE<br>DRAIN LINE CONNECTION<br>TO EXIST. STORM INLET<br>DWG. 2237 AUG. 1986 |

25X

0000 0000 1554

PLANS/PLATS ON FILE

FILE DESC: C13/D8

# PLANS/PLATS 1

25×10

0000 0000 1560

25 x 10

HYDROLOGY C13/D8 2 PLANS

C13/D8

2 Plans

FILE COPY

# City of Albuquerque

P.O. BOX 1293 ALBUQUERQUE, NEW MEXICO 87103

| MAYOR | CHIEF ADMINISTRATIVE OFFICER | DEPUTY CAO PUBLIC SERVICES | DEPUTY CAO PLANNING/DEVELOPMENT |
|---|---|---|---|
| KEN SCHULTZ | GENE ROMO | FRANK MARTINEZ | BILL MUELLER |

March 7, 1988

Charles M. Easterling, P.E.
Easterling & Associates, Inc.
5643 Paradise Boulevard, NW
Albuquerque, New Mexico 87114

RE: "AS-BUILT" GRADING & DRAINAGE PLAN SUBMITTAL OF STATE FARM INSURANCE CLAIMS CENTER, RECEIVED FEBRUARY 23, 1988 FOR CERTIFICATE OF OCCUPANCY APPROVAL (C-13/D8)

Dear Mr. Easterling:

The above referenced submittal dated February 11, 1988 is approved for Certificate of Occupancy sign-off by Hydrology.

If I can be of further assistance, please feel free to call me at 768-2650.

Cordially,

Roger A Green, PE

Roger A. Green, P.E.
C.E./Hydrology Section

RAG/bsj

xc: Kevin Georges & Associates
127 Jefferson Street, NE

# DRAINAGE INFORMATION SHEET

ZONE ATLAS/DRAINAGE FILE NO. C-13/D8

PROJECT TITLE: STATE FARM INSURANCE SERVICE CENTER

LEGAL DESCRIPTION: TRACT 2D OF EAGLE RANCH SUBDIVISION

CITY ADDRESS:

ENGINEERING FIRM: Easterling & Assoc. Inc. CONTACT:

ADDRESS: 5643 Paradise Blvd. N.W. PHONE: 898-8021

OWNER: STATE FARM INSURANCE CONTACT: JIM BEEMER

ADDRESS: ONE STATE FARM PLAZA BLOOMINGTON, ILL. 61701 PHONE:

ARCHITECT: KEVIN GEORGES & ASSOC. CONTACT: KEVIN GEORGES

ADDRESS: 127 JEFFERSON ST. N.E. PHONE: 255-4975

SURVEYOR: HUGG SURVEYING CONTACT: GARRY HUGG

ADDRESS: 4100 SOUTHERN BLVD. S.E. RIO RANCHO N.M. 87124 PHONE: 892-8800

CONTRACTOR: KLINGER CONTACT: GLEN

ADDRESS: ON SITE PHONE: 898-8273

RECEIVED FEB 23 1988 HYDROLOGY SECTION

PRE-DESIGN MEETING:

____ YES

X NO

____ COPY OF CONFERENCE RECAP SHEET PROVIDED

DRB NO. ____

EPC NO. ____

PROJECT NO. ____

TYPE OF SUBMITTAL:

____ DRAINAGE REPORT

____ DRAINAGE PLAN

____ CONCEPTUAL GRADING & DRAINAGE PLAN

____ GRADING PLAN

____ GRADING & DRAINAGE PLAN

____ EROSION CONTROL PLAN

____ ENGINEER'S CERTIFICATION

CHECK TYPE OF APPROVAL SOUGHT:

____ SKETCH PLAT APPROVAL

____ PRELIMINARY PLAT APPROVAL

____ SITE DEVELOPMENT PLAN APPROVAL

____ FINAL PLAT APPROVAL

____ BUILDING PERMIT APPROVAL

____ FOUNDATION PERMIT APPROVAL

X CERTIFICATE OF OCCUPANCY APPROVAL

____ ROUGH GRADING PERMIT APPROVAL

____ GRADING/PAVING PERMIT APPROVAL

____ OTHER ____ (SPECIFY)

DATE SUBMITTED: FEBRUARY 10, 1988 BY: David G. Smith

Mail X Federal Express ____ Deliver ____ Hold For Pick-up ____

**EASTERLING & ASSOCI ES, INC.**
5643 Paradise Blvd. NW
ALBUQUERQUE, NEW MEXICO 87114

(505) 898-8021

# LETTE.. OF TRANSMITTAL

| | |
|---|---|
| DATE 2-10-88 | JOB NO. 705401 |
| ATTENTION ROGER GREEN | |
| RE: ENTRANCE TO STATE FARM INS. SERVICE CENTER. "AS BUILTS" | |

TO CITY OF ALBUQUERQUE
"HYDROLOGY."

RECEIVED
FEB 23 1988
HYDROLOGY SECTION

WE ARE SENDING YOU X Attached ☐ Under separate cover via _____ the following items:

☐ Shop drawings X Prints ☐ Plans ☐ Samples ☐ Specifications
☐ Copy of letter ☐ Change order ☐ _____

| COPIES | DATE | NO. | DESCRIPTION |
|---|---|---|---|
| 1 | | | G & D PLAN |
| 1 | | | DRAINAGE INFORMATION SHEET. |
| | | | |
| | | | |
| | | | |
| | | | |
| | | | |
| | | | |

THESE ARE TRANSMITTED as checked below:

X For approval ☐ Approved as submitted ☐ Resubmit _____ copies for approval
☐ For your use ☐ Approved as noted ☐ Submit _____ copies for distribution
☐ As requested ☐ Returned for corrections ☐ Return _____ corrected prints
☐ For review and comment X CERTIFICATE OF OCCUPANCY APPROVAL
☐ FOR BIDS DUE _____ 19 _____ ☐ PRINTS RETURNED AFTER LOAN TO US

REMARKS ENCLOSED IS THE AS BUILT INFORMATION FOR THE EAGLE RANCH ROAD ENTRANCE.

Daniel L. Smith

COPY TO _____ SIGNED: _____

If enclosures are not as noted, kindly notify us at once.

PRODUCT 240-2 NEBS Inc. Groton, Mass. 01471

FILE COPY

# City of Albuquerque

P.O. BOX 1293 ALBUQUERQUE, NEW MEXICO 87103

MAYOR
KEN SCHULTZ

CHIEF ADMINISTRATIVE OFFICER
GENE ROMO

DEPUTY CAO PUBLIC SERVICES
FRANK MARTINEZ

DEPUTY CAO PLANNING/DEVELOPMENT
BILL MUELLER

January 26, 1988

Charles M. Easterling, P.E.
Easterling & Associates, Inc.
5643 Paradise Boulevard, NW
Albuquerque, New Mexico 87114

RE: GRADING & DRAINAGE PLAN SUBMITTAL OF STATE FARM INSURANCE CLAIMS CENTER RECEIVED JANUARY 20, 1988 FOR CERTIFICATE OF OCCUPANCY APPROVAL (C-13/D8)

Dear Mr. Easterling:

I have reviewed your drawing of the above referenced project, and concur with you that the amount of runoff from area 1C by-passing the pond curb cut and entering Eagle Ranch Road is insignificant. Since the drive was constructed differently from the approved plan, the Certificate of Occupancy will be released by Hydrology upon receipt of an "As-Built" Grading and Drainage Plan showing the actual spot elevations and contours of the driveway, parking, and curb cut areas. This plan must have an engineer's stamp and date.

To eliminate the possibility of drive pad and drainage conflicts on future projects the following design suggestions could be followed:

1. Drive pads should be located as far from street intersections as possible.

2. Curb cuts or rundowns into ponding areas from parking areas should not be located near the drive pads since drive pad slopes should be minimal.

If you have any questions, please call me at 768-2650.

Cordially,

Roger A. Green PE

Roger A. Green, P.E.
C.E./Hydrology Section

xc: Kevin Georges & Assoc.

RAG/bsj

**EASTERLING & ASSOCIATES, INC.**
5643 Paradise Blvd. NW
ALBUQUERQUE, NEW MEXICO 87114

(505) 898-8021

# LETTER OF TRANSMITTAL

DATE 1-20-88 | JOB NO. 705401

ATTENTION ROGER GREEN

RE: STATE FARM SERVICE CENTER

"ENTRANCE DRAINAGE"

TO CITY OF ALBUQUERQUE

"HYDROLOGY"

WE ARE SENDING YOU ☐ Attached ☐ Under separate cover via _____ the following items:

☐ Shop drawings ☐ Prints ☐ Plans ☐ Samples ☐ Specifications

☐ Copy of letter ☐ Change order ☐ _____

| COPIES | DATE | NO. | DESCRIPTION |
|---|---|---|---|
| 1 | | 1 OF 2 | HYDROLOGY |
| 1 | | 2 OF 2 | G&D PLAN. |

RECEIVED
JAN 20 1988
HYDROLOGY SECTION

THESE ARE TRANSMITTED as checked below:

☒ For approval ☐ Approved as submitted ☐ Resubmit _____ copies for approval

☐ For your use ☐ Approved as noted ☐ Submit _____ copies for distribution

☐ As requested ☐ Returned for corrections ☐ Return _____ corrected prints

☐ For review and comment ☐ _____

☐ FOR BIDS DUE _____ 19 _____ ☐ PRINTS RETURNED AFTER LOAN TO US

REMARKS ROGER, PLEASE CALL WHEN YOU GET TO THIS SO WE CAN EXPLAIN IT TO YOU.

DAVID SMITH OR CHUCK

COPY TO _____

SIGNED: Bernard Jaramillo 1/20

If enclosures are not as noted, kindly notify us at once.

DRAINAGE INFORMATION SHEET

PROJECT TITLE: State Farm Ins. Service Center ZONE ATLAS/DRNG. FILE #: C-13/D8

LEGAL DESCRIPTION: Tract 2D of Eagle Ranch Sub.

CITY ADDRESS:

ENGINEERING FIRM: Easterling & Assoc CONTACT: David Smith

ADDRESS: 5643 Paradise Blvd NW PHONE: 898-8021

OWNER: State Farm Inc. CONTACT: Jim Beemer

ADDRESS: one State Farm Plaza Bloomington Ill. 61701 PHONE:

ARCHITECT: Kevin Georges & Assoc CONTACT: Kevin Georges

ADDRESS: 127 Jefferson St. NE PHONE: 255-4975

SURVEYOR: Hugg Surveying CONTACT: Gary Hugg

ADDRESS: 4100 Southern Blvd Rio Rancho, NM 87124 PHONE: 892-8800

CONTRACTOR: CONTACT:

ADDRESS: PHONE:

RECEIVED JAN 20 1988 HYDROLOGY SECTION

PRE-DESIGN MEETING:

___ YES

X NO

___ COPY OF CONFERENCE RECAP SHEET PROVIDED

DRB NO. ___

EPC NO. ___

PROJ. NO. ___

TYPE OF SUBMITTAL:

___ DRAINAGE REPORT

X DRAINAGE PLAN

___ CONCEPTUAL GRADING & DRAINAGE PLAN

X GRADING PLAN

___ EROSION CONTROL PLAN

___ ENGINEER'S CERTIFICATION

CHECK TYPE OF APPROVAL SOUGHT:

___ SKETCH PLAT APPROVAL

___ PRELIMINARY PLAT APPROVAL

___ SITE DEVELOPMENT PLAN APPROVAL

___ FINAL PLAT APPROVAL

___ BUILDING PERMIT APPROVAL

___ FOUNDATION PERMIT APPROVAL

X CERTIFICATE OF OCCUPANCY APPROVAL

___ ROUGH GRADING PERMIT APPROVAL

___ GRADING/PAVING PERMIT APPROVAL

___ OTHER ___ (SPECIFY)

DATE SUBMITTED: 1-21-88

BY: David D Hanson

FILE COPY

# CITY OF ALBUQUERQUE
# PUBLIC WORKS DEPARTMENT

ENGINEERING GROUP

INTER-OFFICE CORRESPONDENCE December 14, 1987

TO: Tom Aragon, Transportation System Division

FROM: Fred J. Aguirre, Hydrologist; Engineering Group/PWD

SUBJECT: PRIVATE DRAINAGE FACILITIES WITHIN PUBLIC RIGHTS-OF-WAY/EASEMENT
STATE FARM INSURANCE SERVICE CENTER - C-13/D8

Transmitted herewith, is a copy of the approved drainage plan for the referenced project incorporating the S.O. #19 design.

In accordance with the new process, this plan is being submitted to you for permitting and inspection. Please provide this section with a signed-off copy per the signature block upon construction and acceptance by your office.

As you are aware, the signed-off S.O. #19 is required by this office for Certificate of Occupancy release; hence your expeditious processing of this plan would be greatly appreciated and would avoid any unnecessary delay in the release of the Certificate of Occupancy.

Thank you for your cooperation, and if you should have any questions and/or comments regarding the process, please feel free to call me at 768-2650.

FJA/bsj

Attachment

FILE COPY

# City of Albuquerque

P.O. BOX 1293 ALBUQUERQUE, NEW MEXICO 87103

Ken Schultz
Mayor

UTILITY DEVELOPMENT DIVISION
HYDROLOGY SECTION
(505) 768-2650

June 19, 1987

Charles M. Easterling, P.E.
Easterling & Associates, Inc.
5643 Paradise Boulevard, NW
Albuquerque, New Mexico 87114

RE: GRADING & DRAINAGE PLAN SUBMITTAL FOR STATE FARM INSURANCE CENTER - RECEIVED JUNE 16, 1987 FOR BUILDING PERMIT APPROVAL (C-13/D8)

Dear Mr. Easterling:

The submittal referred to above, sheets 1 and 2, dated February 1987, with revisions on Jun 15, 1987, Job No. 705401, is approved for Building Permit sign-off by Hydrology. These approved drawings must be included with the construction sets routed for permit sign-off.

Sheets 1 and 2 are also approved for construction of the private storm drain facilities within the public right-of-way. The contractor is required to obtain a separate excavation/construction permit for these improvements. Prior to approval of the Certificate of Occupancy by Hydrology, this connection of drainage facilities to Eagle Ranch Road drainage, detail J1, will require City inspection and sign-off.

If you have any questions, please call me at 768-2650.

Cordially,

Stuart Reeder

G. Stuart Reeder, P.E.
C.E./Hydrology Section

GSR/bsj

**EASTERLING & ASSOCIATES, INC.**
5643 Paradise Blvd. NW
ALBUQUERQUE, NEW MEXICO 87114

(505) 898-8021

# LETTER OF TRANSMITTAL

DATE 6-15-87 JOB NO. 706101

ATTENTION STUART REEDER

RE STATE FARM G&D PLAN REVISIONS

TO CITY OF ALBUQ. HYDROLOGY

WE ARE SENDING YOU ☒ Attached ☐ Under separate cover via _____ the following items:

☐ Shop drawings ☒ Prints ☐ Plans ☐ Samples ☐ Specifications
☐ Copy of letter ☐ Change order ☐ _____

RECEIVED JUN 16 1987 HYDROLOGY SECTION

| COPIES | DATE | NO. | DESCRIPTION |
|---|---|---|---|
| 2 | | 1 OF 2 | HYDROLOGY INFO. SHEET. |
| 2 | | 2 OF 2 | G & D PLAN. |
| 1 | | 1. | DRAINAGE INFO. SHEET. |
| 1 | | 1 | COVER LETTER |
| | | | |
| | | | |
| | | | |
| | | | |

THESE ARE TRANSMITTED as checked below:

☒ For approval ☐ Approved as submitted ☐ Resubmit _____ copies for approval
☐ For your use ☐ Approved as noted ☐ Submit _____ copies for distribution
☐ As requested ☐ Returned for corrections ☐ Return _____ corrected prints
☐ For review and comment ☐ _____
☐ FOR BIDS DUE _____ 19 _____ ☐ PRINTS RETURNED AFTER LOAN TO US

REMARKS _____

COPY TO 6/16/87 _____ SIGNED: David S. Lucas

If enclosures are not as noted, kindly notify us at once.

PRODUCT 1452 NEBS Inc. Groton, Mass. 01471

DRAINAGE INFORMATION SHEET

PROJECT TITLE: STATE FARM INS. SERVICE CENTER ZONE ATLAS/DRNG. FILE #: C-13/D8

LEGAL DESCRIPTION: TRACT 2D OF EAGLE RANCH SUB.

CITY ADDRESS:

ENGINEERING FIRM: EASTERLING & ASSOC. CONTACT: DAVID SMITH

ADDRESS: 5643 PARADISE BLVD. N.W. PHONE: 898-8021

OWNER: STATE FARM INS. CONTACT: JIM BEEMER

ADDRESS: ONE STATE FARM PLAZA. BLOOMINGTON ILL. 61701 PHONE:

ARCHITECT: KEVIN GEORGES & ASSOC. CONTACT: KEVIN GEORGES

ADDRESS: 127 JEFFERSON ST. N.E. PHONE: 255-4975

SURVEYOR: HUGG SURVEYING CONTACT: GARRY HUGG

ADDRESS: 4100 SOUTHERN BLVD RIO RANCHO 87124 PHONE: 892-8800

CONTRACTOR: CONTACT:

ADDRESS: PHONE:

PRE-DESIGN MEETING:

___ YES

X NO

___ COPY OF CONFERENCE RECORD SHEET PROVIDED

RECEIVED JUN 16 1987 HYDROLOGY SECTION

DRB NO. ___

EPC NO. ___

PROJ. NO. ___

TYPE OF SUBMITTAL:

___ DRAINAGE REPORT

X DRAINAGE PLAN

___ CONCEPTUAL GRADING & DRAINAGE PLAN

X GRADING PLAN

___ EROSION CONTROL PLAN

___ ENGINEER'S CERTIFICATION

CHECK TYPE OF APPROVAL SOUGHT:

___ SKETCH PLAT APPROVAL

___ PRELIMINARY PLAT APPROVAL

___ SITE DEVELOPMENT PLAN APPROVAL

___ FINAL PLAT APPROVAL

X BUILDING PERMIT APPROVAL

___ FOUNDATION PERMIT APPROVAL

___ CERTIFICATE OF OCCUPANCY APPROVAL

___ ROUGH GRADING PERMIT APPROVAL

___ GRADING/PAVING PERMIT APPROVAL

___ OTHER ___ (SPECIFY)

DATE SUBMITTED: JUNE 15TH 1987

BY: David L. Smith

*Easterling & Associates, Inc.*

5643 Paradise Boulevard, NW
Albuquerque, New Mexico 87114
(505) 898-8021

June 15, 1987

RECEIVED
JUN 16 1987
HYDROLOGY SECTION

G. Stuart Reeder, P.E.
C.E./Hydrology Section
Utility Development Division
Public Works Department
City of Albuquerque
P.O. Box 1293
Albuquerque, NM 87103

**RE: GRADING AND DRAINAGE PLAN -- STATE FARM INSURANCE (C-13/D8)**

Dear Mr. Reeder:

We are in receipt of your May 20, 1987 letter (received June 1, 1987) regarding the above-referenced project and offer the following responses:

1. The plans have been clarified.

2. We have re-checked our computations and stand by them as shown.

3. We have subdivided Area 1B as you suggested. The plans have been modified accordingly.

4. The hydrograph of runoff shown on the drawing was forced to have a $Tp = Tc$, a peak rate equal to $qp$ and a runoff volume equal to the total storm runoff. In order to accomplish this, we assumed instantaneous runoff of the total storm and allowed the recession time to vary, as necessary, to balance the volume. It is our feeling that this approach, while not 100% theoretically consistent, gives results which are close to the right answer and conservative. If this were a larger watershed and a higher hazard dam/spillway, we would, of course, use a more technically rigorous solution.

5. Thank you for your concerns. We will convey your suggestions to the owner.

If I can be of further assistance, please do not hesitate to contact me.

Sincerely,

Charles M. Easterling, P.E.

CME:ch
Job No. 705401

Enclosure

xc: Mr. Kevin Georges (with enclosure)

FILE COPY

# City of Albuquerque

P.O. BOX 1293 ALBUQUERQUE, NEW MEXICO 87103

Ken Schultz
Mayor

UTILITY DEVELOPMENT DIVISION
HYDROLOGY SECTION
(505) 768-2650

May 20, 1987

David L. Smith
Easterling & Associates, Inc.
5643 Paradise Boulevard, NW
Albuquerque, New Mexico 87114

RE: GRADING & DRAINAGE PLAN SUBMITTAL OF THE STATE FARM INSURANCE CENTER - RECEIVED APRIL 29, 1987 FOR BUILDING PERMIT APPROVAL (C-13/D8)

Dear Sir:

Concerning the submittal referred to above, Sheets 1 and 2 dated February 12, 1987, and identified as Job No. 705401, I offer the following comments:

1. The width of the sidewalk culvert shown in detail J1 is given as 12" min. 24" max. Please specify a width.

2. Drainage Area 1A appears to be almost entirely paved. The Curve Number (89) and the C factor (.68) for this area are probably too low.

3. Drainage Area 1B should be two drainage areas: Area 1B.1 should encompass the north parking lot and the building's roof, both of which drain into the single d catch basin located in the southeast corner of the parking lot; Area 1B.2 should encompass the rest of Area 1B, which is landscaped and drains from a low area via a four inch PVC pipe.

FILE COPY



4. SCS unit hydrographs put the value of the time to peak at a value between 27% and 37.5% of the value given for the total time of runoff ($.27\ T < Tp < .375T$). The values for peak flow, qp, were generated using a minimum time of concentration of ten minutes. To be consistent, you should use at least this minimum value for the time to peak shown on your hydrograph.

5. Although not required for building permit approval, cleanouts placed at each of the bends in the 12" PVC and the 15" CMP would be desirable should the owners attempt to clean the pipe in the future.

If you have any questions, please call me at 768-2650.

Cordially,

Stuart Reeder

G. Stuart Reeder, P.E.
C.E./Hydrology Section

GSR/bsj

FILE COPY



4. SCS unit hydrographs put the value of the time to peak at a value between 27% and 37.5% of the value given for the total time of runoff ($.27\ T < Tp < .375T$). The values for peak flow, qp, were generated using a minimum time of concentration of ten minutes. To be consistent, you should use at least this minimum value for the time to peak shown on your hydrograph.

5. Although not required for building permit approval, cleanouts placed at each of the bends in the 12" PVC and the 15" CMP would be desirable should the owners attempt to clean the pipe in the future.

If you have any questions, please call me at 768-2650.

Cordially,

Stuart Reeder

G. Stuart Reeder, P.E.
C.E./Hydrology Section

GSR/bsj

EASTERLING & ASSOCIATES, INC.
5643 Paradise Blvd. NW
ALBUQUERQUE, NEW MEXICO 87114
(505) 898-8021

RECEIVED APR 29 1987 HYDROLOGY SECTION

# LETTER OF TRANSMITTAL

DATE 4-29-87 JOB NO. 705701

ATTENTION ROGER GREEN

RE: STATE FARM INSURANCE SERVICE CENTER. GRADING & DRAINAGE PLAN.

TO CITY OF ALBUQUERQUE HYDROLOGY

WE ARE SENDING YOU ☒ Attached ☐ Under separate cover via _____ the following items:

☐ Shop drawings ☒ Prints ☐ Plans ☐ Samples ☐ Specifications

☐ Copy of letter ☐ Change order ☐ _____

| COPIES | DATE | NO. | DESCRIPTION |
|---|---|---|---|
| 2 | | 1 OF 2 | HYDROLOGY INFORMATION SHEET |
| 2 | | 2 OF 2 | GRADING & DRAINAGE PLAN. |
| 1 | | 1 | DRAINAGE INFORMATION SHEET. |
| | | | |
| | | | |
| | | | |
| | | | |
| | | | |

THESE ARE TRANSMITTED as checked below:

☒ For approval ☐ Approved as submitted ☐ Resubmit ____ copies for approval

☐ For your use ☐ Approved as noted ☐ Submit ____ copies for distribution

☐ As requested ☐ Returned for corrections ☐ Return ____ corrected prints

☐ For review and comment ☐ _____

☐ FOR BIDS DUE _____ 19____ ☐ PRINTS RETURNED AFTER LOAN TO US

REMARKS #4 OF YOUR LETTER OF MARCH 17TH, 1987 THE DETENTION POND IS SHAPED IRREGULARLY SO PLANIMETERING WAS USED.

ELEVATION 5050.90 = 5,680 ft² = 13,680 ÷ 2 = 6,840 ×
ELEVATION 5052.30 = 8,000 ft²

1.4' = 9,576 c.f.

COPY TO _____

SIGNED: David L. Smith

If enclosures are not as noted, kindly notify us at once.

PRODUCT 240-2 NEBS Inc. Groton, Mass. 01471

DRAINAGE INFORMATION SHEET

PROJECT TITLE: STATE FARM INSURANCE SERVICE CENTER ZONE ATLAS/DRNG. FILE #: C-13/D8

LEGAL DESCRIPTION: TRACT 2D OF EAGLE RANCH SUBDIVISION

CITY ADDRESS:

ENGINEERING FIRM: EASTERLING & ASSOC CONTACT: DAVID SMITH

ADDRESS: 5643 PARADISE BLVD. N.W. PHONE: 898-8021

OWNER: STATE FARM INSURANCE CONTACT: JIM BEEMER

ADDRESS: ONE STATE FARM PLAZA BLOOMINGTON ILL. 61701 PHONE:

ARCHITECT: KEVIN GEORGES & ASSOC. CONTACT: KEVIN GEORGES

ADDRESS: 127 JEFFERSON ST. N.E. PHONE: 255-4975

SURVEYOR: HUGG SURVEYING CONTACT: GARRY HUGG

ADDRESS: 4100 SOUTHERN BLVD. RIO RANCHO 87124 PHONE: 892-8800

CONTRACTOR: CONTACT:

ADDRESS: PHONE:

PRE-DESIGN MEETING:

___ YES

X NO

___ COPY OF CONFERENCE RECAP SHEET PROVIDED

RECEIVED APR 29 1987 HYDROLOGY SECTION

DRB NO.

EPC NO.

PROJ. NO.

TYPE OF SUBMITTAL:

___ DRAINAGE REPORT

X DRAINAGE PLAN

___ CONCEPTUAL GRADING & DRAINAGE PLAN

X GRADING PLAN

___ EROSION CONTROL PLAN

___ ENGINEER'S CERTIFICATION

CHECK TYPE OF APPROVAL SOUGHT:

___ SKETCH PLAT APPROVAL

___ PRELIMINARY PLAT APPROVAL

___ SITE DEVELOPMENT PLAN APPROVAL

___ FINAL PLAT APPROVAL

X BUILDING PERMIT APPROVAL

___ FOUNDATION PERMIT APPROVAL

___ CERTIFICATE OF OCCUPANCY APPROVAL

___ ROUGH GRADING PERMIT APPROVAL

___ GRADING/PAVING PERMIT APPROVAL

___ OTHER _____ (SPECIFY)

DATE SUBMITTED: 4-29-87

BY: Wayne L. Smith

FILE COPY

# City of Albuquerque

P.O. BOX 1293 ALBUQUERQUE, NEW MEXICO 87103

Ken Schultz
Mayor

UTILITY DEVELOPMENT DIVISION
HYDROLOGY SECTION
(505) 768-2650

March 17, 1987

David L. Smith
Easterling & Associates, Inc.
5643 Paradise Boulevard, NW
Albuquerque, New Mexico 87114

RE: CONCEPTUAL GRADING & DRAINAGE PLAN SUBMITTAL OF STATE FARM INSURANCE SERVICE CENTER RECEIVED FEBRUARY 27, 1987 FOR SITE DEVELOPMENT PLAN APPROVAL (C-13/D8)

Dear David:

The above referenced submittal dated February 23, 1987, is approved for Site Development Plan sign-off by the City Engineer.

Prior to Building Permit approval, a more detailed Grading and Drainage Plan submittal will be required. Some items to be added are:

1. Width of sidewalk culvert required.
2. The peak Q on hydrograph does not match the summation of the peak Q's in the Hydrology Table.
3. Street grades for Congress Avenue will be required with a water block at the north drive pad.
4. Calculations showing the capacity of proposed detention pond.

If you have any questions, call me at 768-2650.

Cordially,

Roger A. Green, PE

Roger A. Green, P.E.
C.E./Hydrology Section

RAG/bsj

PUBLIC WORKS DEPARTMENT
ENGINEERING GROUP

Telephone (505) 768-2500

Walter Nickerson, P.E., City Engineer

AN EQUAL OPPORTUNITY EMPLOYER

DRAINAGE INFORMATION SHEET

PROJECT TITLE: STATE FARM INSURANCE ZONE ATLAS/DRNG. FILE #: ~~B-13~~ C-13/DB

LEGAL DESCRIPTION: TRACT 2A OF EAGLE RANCH SUBDIVISION

CITY ADDRESS:

ENGINEERING FIRM: EASTERLINE & ASSOC., INC CONTACT: DAVID L. SMITH

ADDRESS: 5643 PARADISE BLVD. NW PHONE: 898-8021

OWNER: STATE FARM INSURANCE CONTACT: JIM BEEMER

ADDRESS: ONE STATE FARM PLAZA BLOOMINGTON, IL 61701 PHONE:

ARCHITECT: CASTILLO COMPANY CONTACT: BOB SANDOVAL

ADDRESS: P.O. BOX 21087 PHOENIX, AZ 85034 PHONE: 602/231-9000

SURVEYOR: HUGG SURVEYING CONTACT: GARRY HUGG

ADDRESS: 4100 SOUTHERN BLVD RIO RANCHO, NM 87124 PHONE: 892-8800

CONTRACTOR: CONTACT:

ADDRESS: PHONE:

PRE-DESIGN MEETING:

___ YES

X NO

___ COPY OF CONFERENCE RECAP SHEET PROVIDED

RECEIVED FEB 27 1987 HYDROLOGY SECTION

DRB NO. ___

EPC NO. ___

PROJ. NO. ___

TYPE OF SUBMITTAL:

___ DRAINAGE REPORT

___ DRAINAGE PLAN

X CONCEPTUAL GRADING & DRAINAGE PLAN

___ GRADING PLAN

___ EROSION CONTROL PLAN

___ ENGINEER'S CERTIFICATION

CHECK TYPE OF APPROVAL SOUGHT:

___ SKETCH PLAT APPROVAL

___ PRELIMINARY PLAT APPROVAL

X SITE DEVELOPMENT PLAN APPROVAL

___ FINAL PLAT APPROVAL

___ BUILDING PERMIT APPROVAL

___ FOUNDATION PERMIT APPROVAL

___ CERTIFICATE OF OCCUPANCY APPROVAL

___ ROUGH GRADING PERMIT APPROVAL

___ GRADING/PAVING PERMIT APPROVAL

___ OTHER ___ (SPECIFY)

DATE SUBMITTED: 2/27/87

BY: David L. Smith