TRAFFIC CIRCULATION LAYOUT APPROVED

Curtis A Cherne 1-5-24

Signed Date

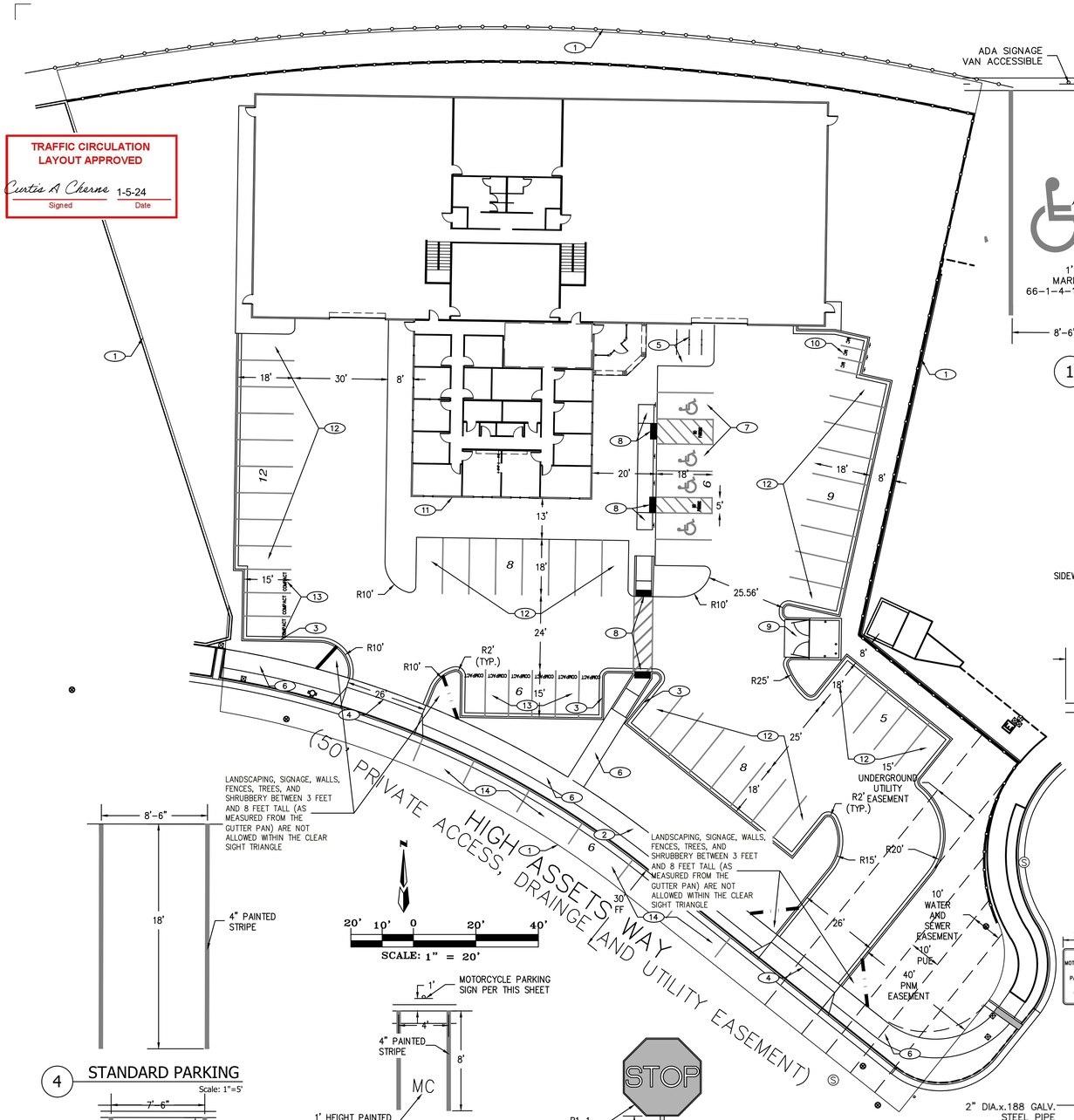

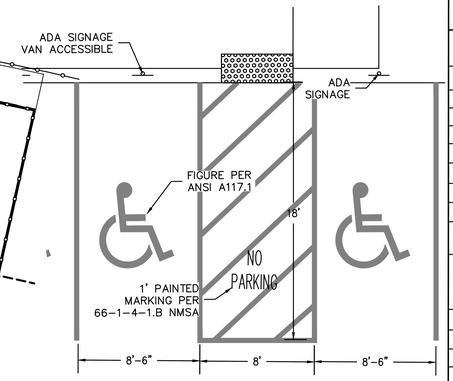

1 ADA PARKING DETAIL

Scale: 1"=5'

SITE DATA

LOCATION	4805 HIGH ASSETS WAY N.W. ALBUQUERQUE, NM
LEGAL DESCRIPTION	LOT 4-A-1-A ALBUQUERQUE WEST UNIT TWO
CURRENT ZONING	NR-C
ZONE ATLAS PAGE	C-13
BUILDING CONSTRUCTION TYPE	IIB
APPLICABLE CODE	2015 IBC / IFC
TOTAL LOT AREA	(1.54 AC) 67,148 SF
BUILDING FLOOR AREA	18,887 SF
REQUIRED PARKING	3 * 18,887/1000 = 57 SPACES COMMERCIAL SERVICES 3 SPACES/1,000 SQ.FT
PARKING PROVIDED	60 SPACES 45 STANDARD SPACES 9 COMPACT SPACES 6 ON-STREET SPACES
REQUIRED ADA PARKING	4 SPACES (1 VAN)
PROVIDED ADA PARKING	4 SPACES (1 VAN)
REQUIRED MOTORCYCLE PARKING	3 SPACES
PROVIDED MOTORCYCLE PARKING	3 SPACES
REQUIRED BICYCLE PARKING	10% OF SPACES 6 SPACES
PROVIDED BICYCLE PARKING	6 SPACES

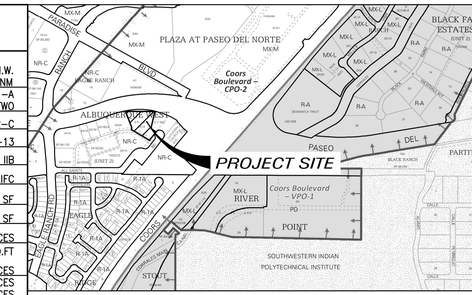

VICINITY MAP C-13-Z

GENERAL NOTES

A. ALL WORK DETAILED ON THESE PLANS TO BE PERFORMED UNDER THIS CONTRACT SHALL, EXCEPT AS OTHERWISE STATED OR PROVIDED HEREIN, BE CONSTRUCTED IN ACCORDANCE WITH THE CITY OF ALBUQUERQUE STANDARD SPECIFICATIONS FOR PUBLIC WORKS CONSTRUCTION.CURB DIMENSIONS ARE TO FACE OF CURB U.N.O.
B. WORK WITHIN CITY ROW WILL REQUIRE CITY WORK ORDER
C. SITE LIGHTING – LIGHTING PROVIDED ON BUILDING FACADES AND IN THE PARKING LOT TO BE CUT-OFF TYPE ANGLED TO BE NON-INTRUSIVE TO ADJACENT PROPERTIES AND RIGHT-OF-WAYS
D. SEE GEO-TECHNICAL REPORT FOR SUB-GRADE PREP REQUIREMENTS OF THE BUILDING AND PARKING LOT

KEYED NOTES

1. PROPERTY LINE
2. ACCESS EASEMENT
3. NEW CONCRETE CURB PER SP1-SITE PLAN
4. NEW DRIVEWAY ENTRANCE PER CABQ SPECIFCATIONS
5. BICYCLE RACKS PER TCL 1-TRAFFIC CIRCULATION LAYOUT
6. 6' CONC. SIDEWALK WITH 1.5% (2% MAX) CROSS SLOPE PER SP1-SITE PLAN
7. ADA PARKING PER TCL-TRAFFIC CIRCULATION LAYOUT
8. HANDICAP RAMP W/TRUNCATED DOME SURFACE PER TCL-TRAFFIC CIRCULATION LAYOUT
9. REFUSE ENCLOSURE PER SP-2 SITE DETAILS AND CABQ. REQUIREMENTS
10. MOTORCYCLE PARKING SPACES 4'x8' WITH SIGN PER TCL-TRAFFIC CIRCULATION LAYOUT
11. PREMISES STREET ADDRESS 4" HIGH MIN. W/MINIMUM STROKE WIDTH OF 0.5 IN. VISIBLE FROM STREET PER IFC 2015, SEC. 505
12. STANDARD PARKING SPACE (TYP.) PER TCL-TRAFFIC CIRCULATION LAYOUT
13. COMPACT PARKING SPACE PER TCL 1-TRAFFIC CIRCULATION LAYOUT
14. ON STREET PARKING PER CABQ SPECIFICATIONS (DEPICTED STRIPING IS FOR ILLUSTRATION AND NOT TO BE INSTALLED)

NOTES

1. THE SURFACE OF RAMP AND SIDES SHALL HAVE A TRANSVERSE BROOMED SURFACE TEXTURE ROUGHER THAN THE SURROUNDING SIDEWALK.
2. CONSTRUCT PER A.D.A. STANDARDS

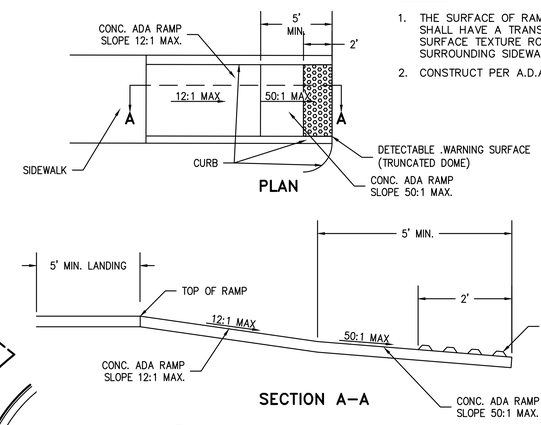

2 ADA RAMP DETAIL

Scale: NTS

4 STANDARD PARKING

Scale: 1"=5'

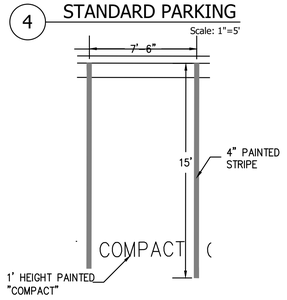

5 COMPACT PARKING

Scale: 1"=5'

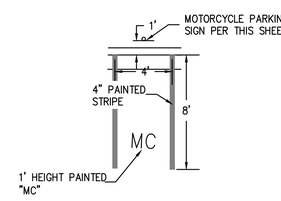

6 MOTORCYCLE PARKING

Scale: 1"=5'

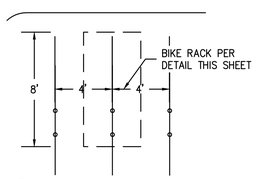

7 BICYCLE PARKING

Scale: 1"=5'

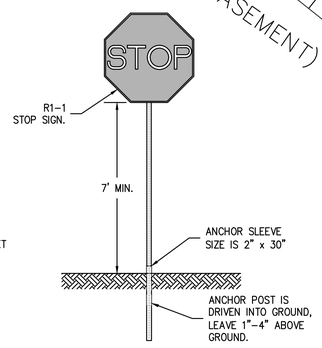

8 REGULATORY SIGN DETAIL

Scale: NTS

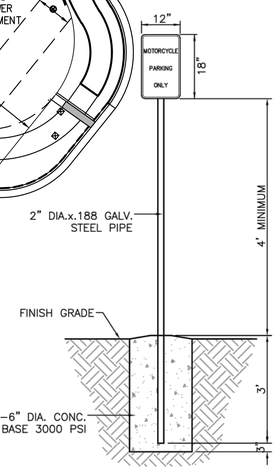

9 MOTORCYCLE PARKING SIGN

Scale: NTS

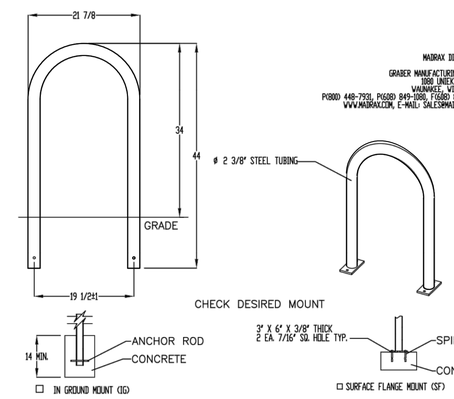

NOTES:
1. INSTALL BIKE RACKS ACCORDING TO MANUFACTURER'S SPECIFICATIONS.
2. CONSULTANT TO SELECT COLOR OF FINISH. SEE MANUFACTURER'S SPECIFICATIONS.
3. SEE SITE PLAN FOR LOCATION OR CONSULT OWNER.

10 BIKE RACK DETAIL

Scale: NTS

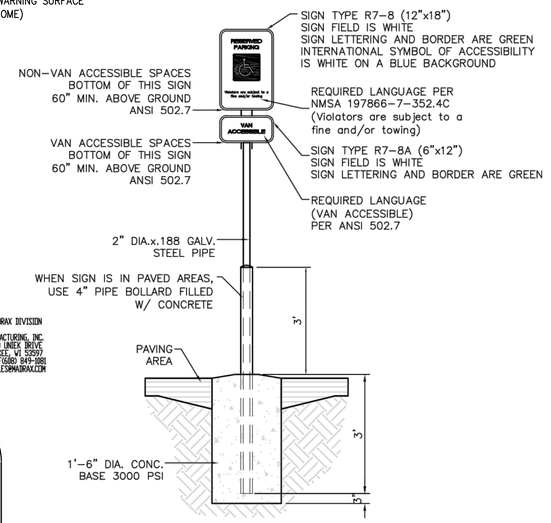

3 ADA SIGNAGE DETAIL

Scale: NTS

THE group

THE HENSLEY ENGINEERING GROUP
300 BRANDING IRON RD. SE
RIO RANCHO, NEW MEXICO 87124
Phone:(505) 410-1622

DEVELOPMENT MANAGEMENT CONSULTANTS

PROFESSIONAL CONSTRUCTION MANAGERS & CONSTULTING ENGINEERS

9320 Menaul Blvd. NE, ste. D
Albuquerque, NM 87112

DMC

Office: (505) 296-7100
Fax: (505) 296-7105

RON E. HENSLEY NEW MEXICO 21850 LICENSED PROFESSIONAL ENGINEER 12/10/23

1. THIS SET OF DRAWINGS EXISTS AS A WHOLE. IT IS THE RESPONSIBILITY OF EACH CONTRACTOR BID ON THE PROJECT TO REVIEW THESE DRAWINGS AS A WHOLE. SHEETS MAY CONTAIN WORK PERTINENT TO THE RESPECTIVE TRADE/PARTIES.
2. DO NOT SCALE DRAWINGS. INCONSISTENCIES IN GRID PLAN REPRODUCTION, SCALING OF DRAWINGS & OMITTED DIMENSIONS IS NOT RECOMMENDED.

-PROJECT ADDRESS-
4805 HIGH ASSETS WAY N.W.
ALBUQUERQUE, NM

-CLIENTS NAME-
TRISKELLION

-DRAWING NAME-
SITE PLAN

-PROJECT NAME-
TRAISKELION GROUP BUILDING

-PROJECT NUMBER-

-PROJECT PROGRESS-
PRELIMINARY

-DRAWN BY-
REH

-CHECKED BY- REH / -APPROVED BY- REH

-DATE-
DEC. 2023

-SCALE-
AS NOTED

-SHEET-

TCL