City of Albuquerque

Planning Department

Development & Building Services Division

DRAINAGE AND TRANSPORTATION INFORMATION SHEET (REV 6/2018)

Project Title: SILVER STAR AUTO Building Permit #: _____ Hydrology File #: C17-D014A1

DRB#: 18DRB70103 EPC#: _____ Work Order#: _____

Legal Description: TR D-1A1-B LOOP INDUSTRIAL DISTRICT SUBN UNIT 1

City Address: 5111 WILSHIRE AVE NE

Applicant: CHRIS WAGGONER Contact: C. WAGGONER

Address: 5111 WILSHIRE AVE NE

Phone#: 881-4855 Fax#: – E-mail: –

Other Contact: LORENZ DESIGN + CONSULTING Contact: D. LORENZ

Address: 2501 RIO GRANDE NW SUITE A, ABQ NM

Phone#: 220-0869 Fax#: _____ E-mail: DENNISL@LORENZNM.COM

TYPE OF DEVELOPMENT: _____ PLAT (# of lots) _____ RESIDENCE X DRB SITE ADMIN SITE

IS THIS A RESUBMITTAL? _____ Yes X No

DEPARTMENT _____ TRANSPORTATION X HYDROLOGY/DRAINAGE

Check all that Apply:

TYPE OF SUBMITTAL:

X ENGINEER/ARCHITECT CERTIFICATION
____ PAD CERTIFICATION
____ CONCEPTUAL G & D PLAN
____ GRADING PLAN
____ DRAINAGE REPORT
____ DRAINAGE MASTER PLAN
____ FLOODPLAIN DEVELOPMENT PERMIT APPLIC
____ ELEVATION CERTIFICATE
____ CLOMR/LOMR
____ TRAFFIC CIRCULATION LAYOUT (TCL)
____ TRAFFIC IMPACT STUDY (TIS)
____ STREET LIGHT LAYOUT
____ OTHER (SPECIFY) _____
____ PRE-DESIGN MEETING?

TYPE OF APPROVAL/ACCEPTANCE SOUGHT:

____ BUILDING PERMIT APPROVAL
X CERTIFICATE OF OCCUPANCY

____ PRELIMINARY PLAT APPROVAL
____ SITE PLAN FOR SUB'D APPROVAL
____ SITE PLAN FOR BLDG. PERMIT APPROVAL
____ FINAL PLAT APPROVAL

____ SIA/ RELEASE OF FINANCIAL GUARANTEE
____ FOUNDATION PERMIT APPROVAL
____ GRADING PERMIT APPROVAL
____ SO-19 APPROVAL
____ PAVING PERMIT APPROVAL
____ GRADING/ PAD CERTIFICATION
____ WORK ORDER APPROVAL
____ CLOMR/LOMR
____ FLOODPLAIN DEVELOPMENT PERMIT
____ OTHER (SPECIFY) _____

DATE SUBMITTED: 4.4.19 By: DENNIS LORENZ

COA STAFF: ELECTRONIC SUBMITTAL RECEIVED: _____

FEE PAID: _____

43250

CITY OF ALBUQUERQUE
BUILDING & SAFETY DIVISION
924-3320

☐ MECHANICAL

☐ ELECTRICAL
☐ PLUMBING

Location 5111 Willshire

Type of Inspection Storm Sewer

Permit # 348222 Date 11-30 20 18

Approved

Form 13-12 Inspector P111210

DO NOT REMOVE

24" x 24" Catch Basin

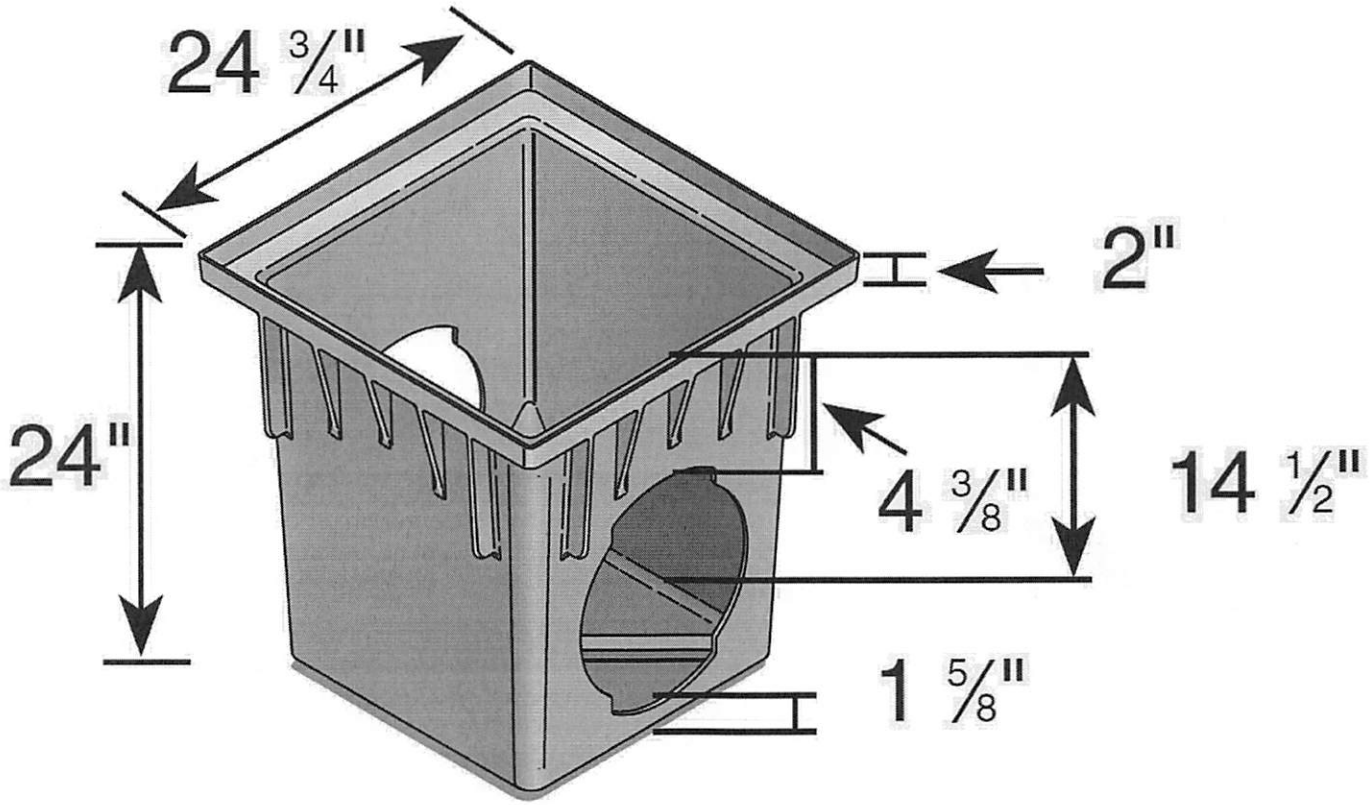

Part #: 2400 (2 Openings) and #2404 (4 Openings)
Material: HDPE (High Density Polyethylene)
Color: Black
Use with 24" x 24" Grates
Fits: 3" or 4" Sch. 40, sewer, drain, corrugated, and triple wall pipe, 6" and 8" sewer, drain and corrugated pipe, 10" and 12" sewer, drain and dual wall corrugated pipe , 12" single wall corrugated pipe will not fit 10" single wall corrugated pipe.
Requires 2 or 4 #2410 Universal Outlet
Weight Per Each: 19.45 lbs. (#2400), 18.00 lbs. (#2404)
UV inhibitor

NDS™
WE PUT WATER IN ITS PLACE

TECHNICAL SPECIFICATIONS

24" x 24" Square Grate

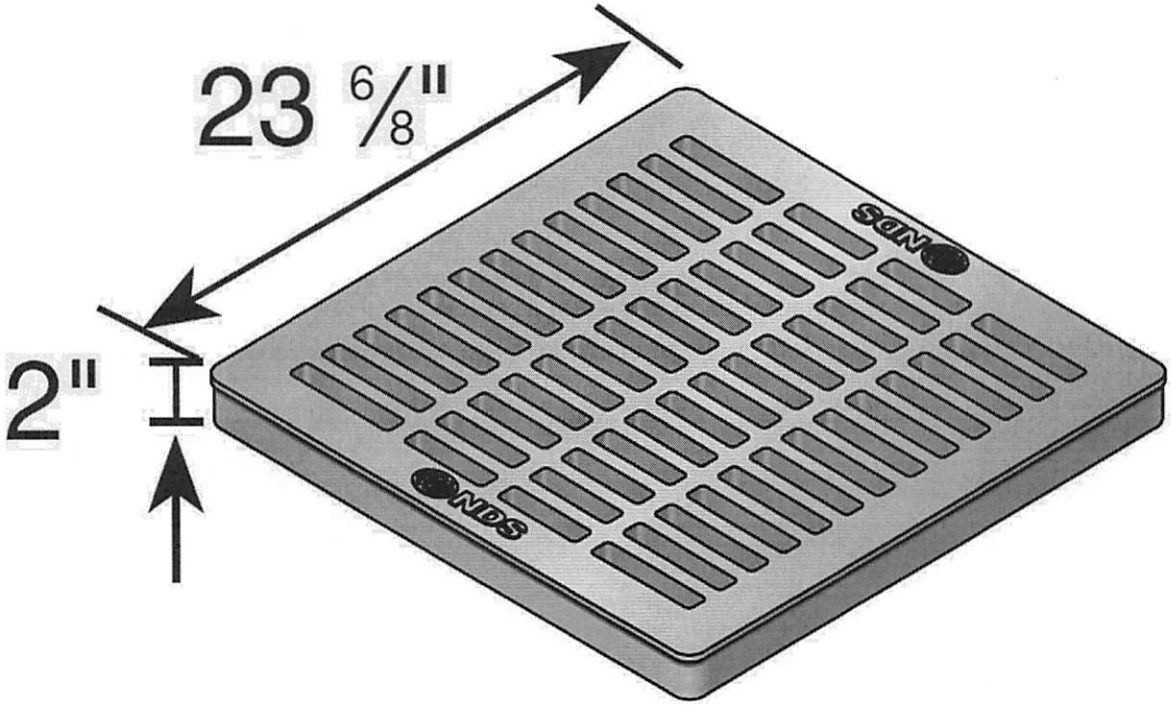

7/8" Grate Opening

Part #: 2411, 2412
Material: (HDPE) High Density Polypropylene
Color: #2411(Black) and #2412 (Green)
Fits: Catch Basin #2400, #2404, and #2418.
Grate Opening: 7/8"
Open Surface Area: 231.69 Sq. Inches
Head Pressure / Flow Rate:
Head (inches) - Max Flow
1"= 1002.35 GPM
1/2" = 708.77 GPM
Weight Per Each: 19.81 lbs.
UV inhibitor.

Load Recommendation Guide

Class B

- Loads of 61-175 psi.
- Recommended for medium-duty pneumatic tire traffic, autos and light trucks at speeds less than 20 m.p.h.

851 N. Harvard Avenue
Lindsay, CA 93247
800-726-1994

Visit **ndspro.com** for specs, detail drawings, and case studies

NDS
WE PUT WATER IN ITS PLACE