CITY OF ALBUQUERQUE

April 17, 2012

Charles M. Easterling, P.E. chuck@ecengr.com
Easterling Consultants, LLC.
3613 NM 528 NW Ste E-2
Albuquerque, NM 87114

Re: Thunderbird Harley Davidson, 5000 Alameda Blvd NE,
Request for Permanent C.O. –Approved
Engineer's Stamp dated: 10-18-11, (C17/D014C)
Certification dated: 03-28-12

Dear Mr. Easterling,

Based upon the information provided in the Certification received 04-12-12, the above referenced Certification is approved for a release of a Permanent Certificate of Occupancy by Hydrology.

Hydrology is asking for an electronic copy, in .pdf format, of this certification for our records. This certification can be e-mailed to me at: tsims@cabq.gov.

If you have any questions, you can contact me at 924-3982.

Sincerely,

Timothy E. Sims,
Plan Checker—Hydrology Section
Development and Building Services

C: CO Clerk—Katrina Sigala
File

DRAINAGE AND TRANSPORTATION INFORMATION SHEET

(REV. 1/28/2003rd)

PROJECT TITLE: Thunderbird Harley Davidson ZONE MAP/DRG. FILE #: C17/D14C
DRB #: _____ EPC#: _____ WORK ORDER#: _____

LEGAL DESCRIPTION Tract F-2-A, Loop Industrial District Subdivsion
CITY ADDRESS: 5000 Alameda Blvd. NE, Albuquerque, NM 87113

ENGINEERING FIRM: Easterling Consultants LLC CONTACT: Charles Easterling
ADDRESS: 3613 NM 528 NW Suite E-2 PHONE: 505-821-6646
CITY, STATE: Albuquerque, NM ZIP CODE: 87114

OWNER: Thunderbird Harley Davidson CONTACT: Glo Cuiffi
ADDRESS: 5000 Alameda Blvd. NE PHONE: 505-856-1600
CITY, STATE: Albuquerque, NM ZIP CODE: 87113

ARCHITECT: _____ CONTACT: _____
ADDRESS: _____ PHONE: _____
CITY, STATE: _____ ZIP CODE: _____

SURVEYOR: Surv-Tek, Inc. CONTACT: Russ Hugg
ADDRESS 9384 Valley View Drive PHONE: 505-897-3366
CITY, STATE: Albuquerque, NM ZIP CODE: 87114

CONTRACTOR: Franklins Earth Moving CONTACT: _____
ADDRESS: _____ PHONE: _____
CITY, STATE: _____ ZIP CODE: _____

CHECK TYPE OF SUBMITTAL:

- ____ DRAINAGE REPORT
- ____ DRAINAGE PLAN 1st SUBMITTAL, ***REQUIRES TCL or equal***
- ____ DRAINAGE PLAN RESUBMITTAL
- ____ CONCEPTUAL GRADING & DRAINAGE PLAN
- ____ GRADING PLAN
- ____ EROSION CONTROL PLAN
- ✓ ENGINEER'S CERTIFICATION (HYDROLOGY)
- ____ CLOMR/LOMR
- ____ TRAFFIC CIRCULATION LAYOUT (TCL)
- ____ ENGINEERS CERTIFICATION (TCL)
- ____ ENGINEERS CERTIFICATION (DRB APPR. SITE PLAN)
- ____ OTHER

CHECK TYPE OF APPROVAL SOUGHT:

- ____ SIA / FINANCIAL GUARANTEE RELEASE
- ____ PRELIMINARY PLAT APPROVAL
- ____ S. DEV. PLAN FOR SUB'D. APPROVAL
- ____ S. DEV. PLAN FOR BLDG. PERMIT APPROVAL
- ____ SECTOR PLAN APPROVAL
- ____ FINAL PLAT APPROVAL
- ____ FOUNDATION PERMIT APPROVAL
- ✓ BUILDING PERMIT APPROVAL
- ✓ CERTIFICATE OF OCCUPANCY (PERM.)
- ____ CERTIFICATE OF OCCUPANCY (TEMP.)
- ____ GRADING PERMIT APPROVAL
- ____ PAVING PERMIT APPROVAL
- ____ WORK ORDER APPROVAL
- ____ OTHER (SPECIFY)

RECEIVED
APR 12 2012
HYDROLOGY SECTION

WAS A PRE-DESIGN CONFERENCE ATTENDED:

- ✓ YES
- ____ NO
- ____ COPY PROVIDED

DATE SUBMITTED: April 11, 2012 BY: Charles Easterling PE

Requests for approvals of Site Development Plans and/or Subdivision Plats shall be accompanied by a drainage submittal. The particular nature , location and scope ot the proposed development defines the degree of drainage detail. One or more of the following levels of submittal may be required based on the following:

1. **Conceptual Grading and Drainage Plan**: Required for approval of Site Development Plans greater than five (5) acres and Sector Plans.
2. **Drainage Plans**: Required for building permits, grading permits, paving permits and site plans less than five (5) acres.
3. **Drainage Report**: Required for subdivisions containing more than ten (10) lots or constituting five (5) acres or more.

CITY OF ALBUQUERQUE

October 27, 2011

Charles M. Easterling, P.E.
Easterling Consultants LLC
3613 NM 528 NW, Suite E-2
Albuquerque, NM 87114

Re: Thunderbird Harley Davidson Parking Lot, Grading and Drainage Plan Engineer's Stamp dated 10-18-11 (C17/D14C)

Dear Mr. Easterling,

Based upon the information provided in your submittal received 10-19-11, the above referenced is approved for Site Development For Building Permit, Building Permit, Paving Permit, and Grading Permit based on the following comments:

- Maintain the top of the northern pond at 5142.00'.

This project requires a National Pollutant Discharge Elimination System (NPDES) permit for storm water discharge and a Topsoil Disturbance Permit since it is disturbing ¾ of an acre or more. Please attach a copy of this approved plan to the construction sets prior to sign-off by Hydrology. Prior to Certificate of Occupancy release, Engineer Certification per the DPM checklist will be required.

If you have any questions, you can contact me at 924-3695.

Sincerely,

Shahab Biazar, P.E.
Senior Engineer, Planning Dept.
Development and Building Services

C: File

PO Box 1293
Albuquerque
NM 87103
www.cabq.gov

DRAINAGE AND TRANSPORTATION INFORMATION SHEET

(REV 01/06 – KDM)

PROJECT TITLE: Thunderbird Harley-Davidson (C17/D14C) (rev 10-18-11) ZONE MAP: C-17 / D014C
DRB#: _____ EPC#: _____ WORK ORDER#: _____

LEGAL DESCRIPTION: Tract F-2-A, Unit 1, Loop Industrial District, Albuquerque, Bernalillo County, N
CITY ADDRESS: 5000 Alameda Blvd. NE, Albuquerque 87113

ENGINEERING FIRM: Easterling Consultants LLC CONTACT: Charles Easterling
ADDRESS: 3613 NM HWY 528 NW PHONE: (505) 821-6646
CITY, STATE: Albuquerque, NM ZIP CODE: 87114

OWNER: Thunderbird Harley-Davidson CONTACT: Glo Cuiffi

ADDRESS: 5000 Alameda Blvd. NE, Albuquerque 87113 PHONE: 505-856-1600
CITY, STATE: Albuquerque, NM ZIP CODE: 87113

ARCHITECT: Claudio Vigil and Associates CONTACT: Sandra Fairchild
ADDRESS: _____ PHONE: 842-1113
CITY, STATE: Albuquerque, NM ZIP CODE: _____

SURVEYING FIRM: Surv-Tek, Inc. CONTACT: Russ Hugg
LICENSED SURVEYOR: _____ LS no. _____
Date Survey was performed: August 2011
ADDRESS: _____ PHONE: _____
CITY, STATE: _____ ZIP CODE: _____

CONTRACTOR: _____ CONTACT: _____
ADDRESS: _____ PHONE: _____
CITY, STATE: _____ ZIP CODE: _____

TYPE OF SUBMITTAL:

- ____ DRAINAGE REPORT
- XX DRAINAGE PLAN 1st SUBMITTAL
- ____ DRAINAGE PLAN RESUBMITTAL
- ____ CONCEPTUAL G & D PLAN
- XX GRADING PLAN
- ____ EROSION CONTROL PLAN
- ____ ENGINEER'S CERT (HYDROLOGY)
- ____ CLOMR/LOMR
- ____ TRAFFIC CIRCULATION LAYOUT
- ____ ENGINEER'S CERT (TCL)
- ____ ENGINEER'S CERT (DRB SITE PLAN)
- ____ OTHER (SPECIFY)

CHECK TYPE OF APPROVAL SOUGHT:

- ____ SIA/FINANCIAL GUARANTEE RELEASE
- ____ PRELIMINARY PLAT APPROVAL
- ____ S. DEV. PLAN FOR SUB'D APPROVAL
- XX S. DEV. FOR BLDG. PERMIT APPROVAL
- ____ SECTOR PLAN APPROVAL
- ____ FINAL PLAT APPROVAL
- ____ FOUNDATION PERMIT APPROVAL
- XX BUILDING PERMIT APPROVAL
- ____ CERTIFICATE OF OCCUPANCY
- XX GRADING PERMIT APPROVAL
- XX PAVING PERMIT APPROVAL
- ____ WORK ORDER APPROVAL
- ____ OTHER (SPECIFY) **S.O. # 19**

RECEIVED
OCT 1 0 2011
HYDROLOGY SECTION

WAS A PRE-DESIGN CONFERENCE ATTENDED:

- XX YES
- ____ NO
- XX COPY PROVIDED (***previously submitted***)

DATE SUBMITTED: 10/18/2011 BY: Charles Easterling PE

Requests for approvals of Site Development Plans and/or Subdivision Plats shall be accompanied by a drainage submittal. The particular nature, location, and scope to the proposed development defines the degree of drainage detail. One or more of the following levels of submittal may be required based on the following:

1. **Conceptual Grading and Drainage Plan**: Required for approval of Site Development Plans greater than five (5) acres and Sector Plans.
2. **Drainage Plans**: Required for building permits, grading permits, paving permits and site plans less than five (5) acres.
3. **Drainage Report**: Required for subdivision containing more than ten (10) lots or constituting five (5) acres or more.

Easterling Consultants LLC

3613 NM 528 NW, Suite E-2
Albuquerque, NM 87114

Office (505) 821-6646
Fax (505) 897-2965

October 14, 2011

Shahab Biazar, P.E.
Senior Engineer
Planning Department
Development and Building Services
City of Albuquerque
PO Box 1293
Albuquerque, NM 87103

Re: Thunderbird Harley Davidson Parking Lot, Grading and Drainage Plan
Engineer's Stamp dated 10-06-11 (C17/D14C)

Dear Shahab:

I am in receipt of your comments on the above referenced submittal and offer the following responses: (your comments are in bold italics, responses in plain text)

- ***Include input and summary output file with your report.***
  Input and output summary reports are included in the revised report.
- ***Did you consider running ponding calculations for the northerly pond as part of AHYMO runs.***
  The north pond has too little capacity relative to the runoff volume to have any discernable effect in the 100 year storm so it was not modeled.
- ***Provide pond volume calculations.***
  See report appendix for pond volume determination for the south pond.
- ***Also include inlet capacity and pipe flow capacity calculations.***
  See appendix for supplemental hydraulic data.
- ***Does the existing 12" SD have adequate capacity?***
  The existing 12" has sufficient capacity as demonstrated by the summary of hydraulic calculations shown in the Supplemental Hydraulic Calculations and Details attached to the revised drainage report.
- ***Please show the 100yr WSEL on the grading plan.***
  The max WSEL for the 100 year storm runoff has been added to the plan sheet.
- ***Where is the proposed emergency overflow?***
  The emergency overflow from the south pond is now noted. It is the access ramp.
- ***Provide all build notes and ghost existing areas.***
  Drafting standards reviewed and revised accordingly.

Letter to Shahab Biazar
Page Two
October 18, 2011

- ***Provide details for the proposed 30" Drain Basin, H-20 Grate, and the 12" In-Line Inlet.***
  The details for Nyloplast drain inlets are attached to the revised drainage report. Note that we bid them as "or-equal" so we won't know what actually got installed until the project is under construction.
- ***A detail for the north pond is needed for the curb opening and the run down.***
  A detail has been added to the plans.
- ***Please double check the flows and grades along the westerly boundary.***
  The curb and adjacent parking lot will carry over 10 times the design flow rate. See supplemental hydraulic calculations.
- ***Adding fill along the westerly boundary may adversely impact the existing building to the west.***
  The grading was designed to match existing elevations at the property line. The area draining to the adjacent property has been reduced by 85%. The approved drainage report from the previous development phase allowed 0.93 cfs to drain westward and onto the adjacent property. This design virtually eliminates runoff from the Thunderbird site while meeting the maximum allowable discharge to Alameda of 10.3 cfs.

If you have any further questions, please do not hesitate to contact me.

Sincerely,

Charles M. Easterling, P.E.
President

HOT SHOT SERVICES, INC.
THE DELIVERY COMPANY

OrderTrackingID: 1040.101811

OrderTrackingID	**1040.101811**	**Ref#**	
Ordered By	Cheri Dunkleberger	**Ref#2**	
Phone	505-821-6646	**Ref#3**	
RoundTrip	N	**Ref#4**	
Spec Instr		**Pieces**	1
Order Date	10/18/2011 [14:36]	**Weight**	0.00
Pickup Date	10/18/2011 [15:00 - 15:00]	**Service**	NEXT DAY by 5
Delivery Date	10/19/2011 [17:00 - 17:00]	**Vehicle**	Cargo Van

Pickup	Delivery
Cheri Dunkleberger **3613 NM 528 NW Suite E-2** **Albuquerque, NM 87114** Contact: Easterling Consultants LLC Phone: 505-821-6646 Spec Instr: NW corner of Ellison & Alameda/NM528, directly across NM528 from Barnes and Noble.	**City of Albuquerque** **600 2nd Street NW** **Albuquerque, NM 87102** Contact: Planning Department Phone: 505-924-3860 Spec Instr: Pyramid shaped building. After entering building go right and there is a counter where you can drop off the package.

Delivery Signature X. Time Driver# Pickup Time

Roundtrip Signature X. Time Name

Terms

Insurance
Insurance on the total value of the shipment tendered on each freight bill may be obtained at a cost of $.60 per hundred dollars of coverage requested. Cost will be added into the charges of specific freight bill invoice.

Declared Value
Declared valuations agreed and understood. Hot Shot Services liability limited to the actual damages sustained but in no event higher than $.50/lb, $50.00, or the C.O.D. amount, whichever is least. Unless a higher valuation is declared and charges paid thereon.

Dimensional Weight
Debtor will be charged for the actual weight of shipment or the dimensional weight, whichever is greater. Dimensional weight is determined by the following equation: (L x W x H) / 194 for each piece tendered to Hot Shot Services. All dimensions are measured in inches.

Hot Shot Services, Inc.
505-344-5440

RECEIVED
OCT 1 2011
HYDROLOGY SECTION

Shahab's Calc.


```
* ZONE 2
*****************************************************************
*        100-YEAR,  6-HR STORM (UNDER PROPOSED CONDITIONS)      *
*****************************************************************
START                   TIME=0.0
RAINFALL                TYPE=1 RAIN QUARTER=0.0 IN
                        RAIN ONE=2.01 IN RAIN SIX=2.35 IN
                        RAIN DAY=2.75 IN DT=0.03333 HR
* ON-SITE
COMPUTE NM HYD          ID=1 HYD NO=101.0 AREA=0.004 SQ MI
                        PER A=100.00 PER B=0.00 PER C=0.00 PER D=0.00
                        TP=0.1333 HR MASS RAINFALL=-1
*****************************************************************
*        100-YEAR,  6-HR STORM (UNDER PROPOSED CONDITIONS)      *
*****************************************************************
START                   TIME=0.0
RAINFALL                TYPE=1 RAIN QUARTER=0.0 IN
                        RAIN ONE=1.34 IN RAIN SIX=1.57 IN
                        RAIN DAY=1.83 IN DT=0.03333 HR
* ON-SITE
COMPUTE NM HYD          ID=2 HYD NO=102.0 AREA=0.002 SQ MI
                        PER A=0.00 PER B=15.00 PER C=0.00 PER D=85.00
                        TP=0.1333 HR MASS RAINFALL=-1
*****************************************************************
ADD HYD                 ID=3 HYD NO=102.10 ID=1 ID=2
*
ROUTE RESERVOIR         ID=4 HYD NO=502.1 INFLOW ID=3 CODE=24
                        OUTFLOW(CFS)      STORAGE(AC-FT)  ELEVATION(FT)
                            0.00              0.00000      5139.50
                            1.00              0.01000      5140.00
                            2.67              0.02100      5140.50
                            3.78              0.03200      5141.00
                            5.35              0.06300      5142.00
                            6.55              0.11800      5143.00
                            7.56              0.20000      5144.00
*****************************************************************
*        100-YEAR,  6-HR STORM (UNDER PROPOSED CONDITIONS)      *
*****************************************************************
START                   TIME=0.0
RAINFALL                TYPE=1 RAIN QUARTER=0.0 IN
                        RAIN ONE=2.01 IN RAIN SIX=2.35 IN
                        RAIN DAY=2.75 IN DT=0.03333 HR
* ON-STIE
COMPUTE NM HYD          ID=5 HYD NO=103.0 AREA=0.0033 SQ MI
                        PER A=0.00 PER B=15.00 PER C=0.00 PER D=85.00
                        TP=0.1333 HR MASS RAINFALL=-1
*****************************************************************
ADD HYD                 ID=6 HYD NO=103.10 ID=4 ID=5
*
ROUTE RESERVOIR         ID=7 HYD NO=503.1 INFLOW ID=6 CODE=24
                        OUTFLOW(CFS)      STORAGE(AC-FT)  ELEVATION(FT)
                            0.00              0.000000     5136.90
                            2.93              0.000126     5138.00
                            6.66              0.000413     5140.50
                            7.18              0.002336     5141.00
                            7.66              0.008362     5141.50
                            8.11              0.221732     5142.00
*****************************************************************
*
FINISH
```

AHYMO OUTPUT FILE

```
    AHYMO PROGRAM (AHYMO_97) -                          - Version:  1997.02d
         RUN DATE (MON/DAY/YR) = 10/27/2011
         START TIME (HR:MIN:SEC) = 10:10:37     USER NO.= AHYMO-I-9702c01000R31-AH
         INPUT FILE = C17D14C

* ZONE 2
*****************************************************************
*        100-YEAR,  6-HR STORM (UNDER PROPOSED CONDITIONS)      *
*****************************************************************
START                TIME=0.0
RAINFALL             TYPE=1 RAIN QUARTER=0.0 IN
                     RAIN ONE=2.01 IN RAIN SIX=2.35 IN
                     RAIN DAY=2.75 IN DT=0.03333 HR

                COMPUTED 6-HOUR RAINFALL DISTRIBUTION BASED ON NOAA ATLAS 2 - PEAK AT 1.40 HR.
                DT =    .033330 HOURS       END TIME =     5.999400 HOURS
                   .0000   .0016   .0033   .0049   .0066   .0084   .0102
                   .0120   .0139   .0158   .0178   .0199   .0219   .0241
                   .0263   .0286   .0309   .0333   .0358   .0384   .0411
                   .0439   .0467   .0497   .0529   .0561   .0596   .0631
                   .0669   .0709   .0751   .0807   .0866   .0930   .1066
                   .1371   .1840   .2514   .3434   .4644   .6186   .8106
                  1.0449  1.2624  1.3533  1.4300  1.4982  1.5602  1.6174
                  1.6704  1.7200  1.7664  1.8102  1.8514  1.8904  1.9273
                  1.9622  1.9953  2.0268  2.0566  2.0850  2.0915  2.0976
                  2.1033  2.1088  2.1140  2.1191  2.1239  2.1285  2.1329
                  2.1373  2.1414  2.1454  2.1494  2.1531  2.1568  2.1604
                  2.1639  2.1673  2.1706  2.1739  2.1771  2.1802  2.1832
                  2.1862  2.1891  2.1919  2.1947  2.1975  2.2002  2.2028
                  2.2054  2.2080  2.2105  2.2130  2.2154  2.2178  2.2202
                  2.2225  2.2248  2.2270  2.2293  2.2315  2.2336  2.2358
                  2.2379  2.2399  2.2420  2.2440  2.2460  2.2480  2.2500
                  2.2519  2.2538  2.2557  2.2576  2.2594  2.2612  2.2631
                  2.2648  2.2666  2.2684  2.2701  2.2718  2.2735  2.2752
                  2.2769  2.2785  2.2802  2.2818  2.2834  2.2850  2.2866
                  2.2881  2.2897  2.2912  2.2928  2.2943  2.2958  2.2973
                  2.2987  2.3002  2.3017  2.3031  2.3045  2.3060  2.3074
                  2.3088  2.3102  2.3115  2.3129  2.3143  2.3156  2.3169
                  2.3183  2.3196  2.3209  2.3222  2.3235  2.3248  2.3261
                  2.3273  2.3286  2.3298  2.3311  2.3323  2.3335  2.3348
                  2.3360  2.3372  2.3384  2.3396  2.3408  2.3419  2.3431
                  2.3443  2.3454  2.3466  2.3477  2.3488  2.3500

* ON-SITE
COMPUTE NM HYD       ID=1 HYD NO=101.0 AREA=0.004 SQ MI
                     PER A=100.00 PER B=0.00 PER C=0.00 PER D=0.00
                     TP=0.1333 HR MASS RAINFALL=-1

     K =   .160154HR    TP =   .133300HR    K/TP RATIO =  1.201459     SHAPE CONSTANT, N =  2.957910
     UNIT PEAK =   8.3533    CFS   UNIT VOLUME =    .9980       B =   278.37      P60 = 2.0100
     AREA =      .004000 SQ MI    IA =    .65000 INCHES    INF =   1.67000 INCHES PER HOUR
     RUNOFF COMPUTED BY INITIAL ABSTRACTION/INFILTRATION NUMBER METHOD - DT =   .033330

*****************************************************************
*        100-YEAR,  6-HR STORM (UNDER PROPOSED CONDITIONS)      *
*****************************************************************
START                TIME=0.0
RAINFALL             TYPE=1 RAIN QUARTER=0.0 IN
                     RAIN ONE=1.34 IN RAIN SIX=1.57 IN
                     RAIN DAY=1.83 IN DT=0.03333 HR

                COMPUTED 6-HOUR RAINFALL DISTRIBUTION BASED ON NOAA ATLAS 2 - PEAK AT 1.40 HR.
                DT =    .033330 HOURS       END TIME =     5.999400 HOURS
                   .0000   .0011   .0022   .0034   .0046   .0058   .0070
                   .0083   .0095   .0109   .0122   .0136   .0150   .0165
                   .0180   .0196   .0212   .0229   .0246   .0263   .0282
```

.0301	.0321	.0341	.0363	.0385	.0408	.0433
.0459	.0486	.0515	.0552	.0591	.0634	.0725
.0928	.1241	.1690	.2304	.3110	.4138	.5418
.6980	.8430	.9036	.9547	1.0002	1.0416	1.0797
1.1150	1.1481	1.1790	1.2082	1.2357	1.2617	1.2863
1.3096	1.3316	1.3526	1.3725	1.3914	1.3958	1.3999
1.4037	1.4074	1.4109	1.4143	1.4175	1.4206	1.4236
1.4265	1.4293	1.4320	1.4346	1.4372	1.4397	1.4421
1.4444	1.4467	1.4490	1.4511	1.4533	1.4554	1.4574
1.4594	1.4614	1.4633	1.4652	1.4670	1.4688	1.4706
1.4724	1.4741	1.4758	1.4775	1.4791	1.4807	1.4823
1.4839	1.4854	1.4869	1.4884	1.4899	1.4914	1.4928
1.4943	1.4957	1.4970	1.4984	1.4998	1.5011	1.5024
1.5037	1.5050	1.5063	1.5075	1.5088	1.5100	1.5113
1.5125	1.5137	1.5148	1.5160	1.5172	1.5183	1.5195
1.5206	1.5217	1.5228	1.5239	1.5250	1.5261	1.5271
1.5282	1.5292	1.5303	1.5313	1.5323	1.5333	1.5344
1.5354	1.5363	1.5373	1.5383	1.5393	1.5402	1.5412
1.5421	1.5431	1.5440	1.5449	1.5458	1.5467	1.5476
1.5485	1.5494	1.5503	1.5512	1.5521	1.5529	1.5538
1.5547	1.5555	1.5564	1.5572	1.5580	1.5589	1.5597
1.5605	1.5613	1.5621	1.5629	1.5637	1.5645	1.5653
1.5661	1.5669	1.5677	1.5685	1.5692	1.5700	

```
* ON-SITE
COMPUTE NM HYD       ID=2 HYD NO=102.0 AREA=0.002 SQ MI
                     PER A=0.00 PER B=15.00 PER C=0.00 PER D=85.00
                     TP=0.1333 HR MASS RAINFALL=-1

     K =   .072649HR    TP =   .133300HR    K/TP RATIO =   .545000     SHAPE CONSTANT, N =  7.106420
     UNIT PEAK =   6.7117    CFS   UNIT VOLUME =    .9976       B =   526.28      P60 = 1.3400
     AREA =      .001700 SQ MI    IA =    .10000 INCHES    INF =    .04000 INCHES PER HOUR
     RUNOFF COMPUTED BY INITIAL ABSTRACTION/INFILTRATION NUMBER METHOD - DT =   .033330


     K =   .140318HR    TP =   .133300HR    K/TP RATIO =  1.052645     SHAPE CONSTANT, N =  3.354139
     UNIT PEAK =   .69661    CFS   UNIT VOLUME =    .9793       B =   309.53      P60 = 1.3400
     AREA =      .000300 SQ MI    IA =    .50000 INCHES    INF =   1.25000 INCHES PER HOUR
     RUNOFF COMPUTED BY INITIAL ABSTRACTION/INFILTRATION NUMBER METHOD - DT =   .033330

*****************************************************************
ADD HYD              ID=3 HYD NO=102.10 ID=1 ID=2
*
ROUTE RESERVOIR      ID=4 HYD NO=502.1 INFLOW ID=3 CODE=24
                     OUTFLOW(CFS)      STORAGE(AC-FT)  ELEVATION(FT)
                         0.00              0.00000      5139.50
                         1.00              0.01000      5140.00
                         2.67              0.02100      5140.50
                         3.78              0.03200      5141.00
                         5.35              0.06300      5142.00
                         6.55              0.11800      5143.00
                         7.56              0.20000      5144.00

 *  *  *  *  *  *  *  *  *  *  *  *  *  *  *  *  *

   TIME       INFLOW    ELEV      VOLUME    OUTFLOW
   (HRS)      (CFS)     (FEET)    (AC-FT)   (CFS)

     .00        .00   5139.50       .000       .00
     .80        .00   5139.50       .000       .00
    1.60       5.74   5141.73       .055      4.93
    2.40        .30   5139.73       .005       .47
    3.20        .05   5139.53       .001       .06
    4.00        .02   5139.51       .000       .02
    4.80        .01   5139.51       .000       .01
    5.60        .02   5139.51       .000       .02
    6.40        .00   5139.50       .000       .01
PEAK DISCHARGE =        4.974 CFS - PEAK OCCURS AT HOUR    1.63
MAXIMUM WATER SURFACE ELEVATION =     5141.761
MAXIMUM STORAGE =         .0556 AC-FT      INCREMENTAL TIME=     .033330HRS
```

```
*************************************************************
*        100-YEAR,  6-HR STORM (UNDER PROPOSED CONDITIONS)       *
*************************************************************
START                TIME=0.0
RAINFALL             TYPE=1 RAIN QUARTER=0.0 IN
                     RAIN ONE=2.01 IN RAIN SIX=2.35 IN
                     RAIN DAY=2.75 IN DT=0.03333 HR

                COMPUTED 6-HOUR RAINFALL DISTRIBUTION BASED ON NOAA ATLAS 2 - PEAK AT 1.40 HR.
                DT =    .033330 HOURS       END TIME =     5.999400 HOURS
                   .0000   .0016   .0033   .0049   .0066   .0084   .0102
                   .0120   .0139   .0158   .0178   .0199   .0219   .0241
                   .0263   .0286   .0309   .0333   .0358   .0384   .0411
                   .0439   .0467   .0497   .0529   .0561   .0596   .0631
                   .0669   .0709   .0751   .0807   .0866   .0930   .1066
                   .1371   .1840   .2514   .3434   .4644   .6186   .8106
                  1.0449  1.2624  1.3533  1.4300  1.4982  1.5602  1.6174
                  1.6704  1.7200  1.7664  1.8102  1.8514  1.8904  1.9273
                  1.9622  1.9953  2.0268  2.0566  2.0850  2.0915  2.0976
                  2.1033  2.1088  2.1140  2.1191  2.1239  2.1285  2.1329
                  2.1373  2.1414  2.1454  2.1494  2.1531  2.1568  2.1604
                  2.1639  2.1673  2.1706  2.1739  2.1771  2.1802  2.1832
                  2.1862  2.1891  2.1919  2.1947  2.1975  2.2002  2.2028
                  2.2054  2.2080  2.2105  2.2130  2.2154  2.2178  2.2202
                  2.2225  2.2248  2.2270  2.2293  2.2315  2.2336  2.2358
                  2.2379  2.2399  2.2420  2.2440  2.2460  2.2480  2.2500
                  2.2519  2.2538  2.2557  2.2576  2.2594  2.2612  2.2631
                  2.2648  2.2666  2.2684  2.2701  2.2718  2.2735  2.2752
                  2.2769  2.2785  2.2802  2.2818  2.2834  2.2850  2.2866
                  2.2881  2.2897  2.2912  2.2928  2.2943  2.2958  2.2973
                  2.2987  2.3002  2.3017  2.3031  2.3045  2.3060  2.3074
                  2.3088  2.3102  2.3115  2.3129  2.3143  2.3156  2.3169
                  2.3183  2.3196  2.3209  2.3222  2.3235  2.3248  2.3261
                  2.3273  2.3286  2.3298  2.3311  2.3323  2.3335  2.3348
                  2.3360  2.3372  2.3384  2.3396  2.3408  2.3419  2.3431
                  2.3443  2.3454  2.3466  2.3477  2.3488  2.3500

* ON-STIE
COMPUTE NM HYD       ID=5 HYD NO=103.0 AREA=0.0033 SQ MI
                     PER A=0.00 PER B=15.00 PER C=0.00 PER D=85.00
                     TP=0.1333 HR MASS RAINFALL=-1

     K =    .072649HR    TP =    .133300HR    K/TP RATIO =    .545000     SHAPE CONSTANT, N =  7.106420
     UNIT PEAK =   11.074    CFS   UNIT VOLUME =    .9984       B =   526.28      P60 = 2.0100
     AREA =       .002805 SQ MI    IA =    .10000 INCHES    INF =    .04000 INCHES PER HOUR
     RUNOFF COMPUTED BY INITIAL ABSTRACTION/INFILTRATION NUMBER METHOD - DT =   .033330

     K =    .132088HR    TP =    .133300HR    K/TP RATIO =    .990905     SHAPE CONSTANT, N =  3.563124
     UNIT PEAK =   1.2065    CFS   UNIT VOLUME =    .9891       B =   324.91      P60 = 2.0100
     AREA =       .000495 SQ MI    IA =    .50000 INCHES    INF =   1.25000 INCHES PER HOUR
     RUNOFF COMPUTED BY INITIAL ABSTRACTION/INFILTRATION NUMBER METHOD - DT =   .033330

*************************************************************
ADD HYD              ID=6 HYD NO=103.10 ID=4 ID=5
*
ROUTE RESERVOIR      ID=7 HYD NO=503.1 INFLOW ID=6 CODE=24
                     OUTFLOW(CFS)       STORAGE(AC-FT)  ELEVATION(FT)
                         0.00               0.000000     5136.90
                         2.93               0.000126     5138.00
                         6.66               0.000413     5140.50
                         7.18               0.002336     5141.00
                         7.66               0.008362     5141.50
                         8.11               0.221732     5142.00

  *  *  *  *  *  *  *  *  *  *  *  *  *  *  *  *  *
```

TIME (HRS)	INFLOW (CFS)	ELEV (FEET)	VOLUME (AC-FT)	OUTFLOW (CFS)
.00	.00	5136.90	.000	.00
.80	.00	5136.90	.000	.00
1.60	11.29	5141.63	.063	7.77
2.40	.85	5137.55	.000	1.74
3.20	.14	5137.00	.000	.27
4.00	.07	5136.94	.000	.10
4.80	.06	5136.93	.000	.07
5.60	.07	5136.93	.000	.07
6.40	.01	5136.90	.000	.01

PEAK DISCHARGE = 7.819 CFS - PEAK OCCURS AT HOUR 1.77
MAXIMUM WATER SURFACE ELEVATION = 5141.677
MAXIMUM STORAGE = .0839 AC-FT INCREMENTAL TIME= .033330HRS

****
*
FINISH

NORMAL PROGRAM FINISH END TIME (HR:MIN:SEC) = 10:10:37

AHYMO SUMMARY OUTPUT FILE

AHYMO PROGRAM SUMMARY TABLE (AHYMO_97) - - VERSION: 1997.02d RUN DATE (MON/DAY/YR) =10/27/2011
INPUT FILE = C17D14C USER NO.= AHYMO-I-9702c01000R31-AH

COMMAND	HYDROGRAPH IDENTIFICATION	FROM ID NO.	TO ID NO.	AREA (SQ MI)	PEAK DISCHARGE (CFS)	RUNOFF VOLUME (AC-FT)	RUNOFF (INCHES)	TIME TO PEAK (HOURS)	CFS PER ACRE	PAGE = 1 NOTATION
START										TIME= .00
RAINFALL TYPE= 1										RAIN6= 2.350
COMPUTE NM HYD	101.00	-	1	.00400	3.99	.113	.53121	1.533	1.559	PER IMP= .00
START										TIME= .00
RAINFALL TYPE= 1										RAIN6= 1.570
COMPUTE NM HYD	102.00	-	2	.00200	3.56	.126	1.17875	1.500	2.784	PER IMP= 85.00
ADD HYD	102.10	1& 2	3	.00600	7.48	.239	.74700	1.500	1.947	
ROUTE RESERVOIR	502.10	3	4	.00600	4.97	.239	.74700	1.633	1.295	AC-FT= .056
START										TIME= .00
RAINFALL TYPE= 1										RAIN6= 2.350
COMPUTE NM HYD	103.00	-	5	.00330	9.17	.337	1.91479	1.500	4.344	PER IMP= 85.00
ADD HYD	103.10	4& 5	6	.00930	13.15	.576	1.16133	1.533	2.209	
ROUTE RESERVOIR	503.10	6	7	.00930	7.82	.579	1.16802	1.766	1.314	AC-FT= .084
FINISH										

CITY OF ALBUQUERQUE

October 13, 2011

Charles M. Easterling, P.E.
Easterling Consultants LLC
3613 NM 528 NW, Suite E-2
Albuquerque, NM 87114

Re: Thunderbird Harley Davidson Parking Lot, Grading and Drainage Plan Engineer's Stamp dated 10-06-11 (C17/D14C)

Dear Mr. Easterling,

Based upon the information provided in your submittal received 10-06-11, the above referenced plan can not be approved for Grading Permit or Paving Permit until the following comments are addressed:

- Include input and summary output file with your report. Did you consider running ponding calculations for the northerly pond as part of AHYMO runs.
- Provide pond volume calculations. Also include inlet capacity and pipe flow capacity calculations. Does the existing 12" SD have adequate capacity?
- Please show the 100yr WSEL on the grading plan.
- Where is the proposed emergency overflow?
- Provide all build notes and ghost existing areas.
- Provide details for the proposed 30" Drain Basin, H-20 Grate, and the 12" In-Line Inlet.
- A detail for the north pond is needed for the curb opening and the run down.
- Please double check the flows and grades along the westerly boundary. Adding fill along the westerly boundary may adversely impact the existing building to the west.

This project requires a National Pollutant Discharge Elimination System (NPDES) permit and a Topsoil Disturbance Permit since it is disturbing ¾ of an acre or more.

If you have any questions, you can contact me at 924-3695 or Rudy Rael at 924-3977.

Sincerely,

Shahab Biazar, P.E.
Senior Engineer, Planning Dept.
Development and Building Services

C: File

PO Box 1293
Albuquerque
NM 87103
www.cabq.gov

DRAINAGE AND TRANSPORTATION INFORMATION SHEET
(REV 01/06 – KDM)

PROJECT TITLE: Thunderbird Harley-Davidson ZONE MAP: C-17
DRB#: _____ EPC#: _____ WORK ORDER#: _____

LEGAL DESCRIPTION: Tract F-2-A, Unit 1, Loop Industrial District, Albuquerque, Bernalillo County, N
CITY ADDRESS: 5000 Alameda Blvd. NE, Albuquerque 87113

ENGINEERING FIRM: Easterling Consultants LLC CONTACT: Charles Easterling
ADDRESS: 3613 NM HWY 528 NW PHONE: (505) 821-6646
CITY, STATE: Albuquerque, NM ZIP CODE: 87114

OWNER: Thunderbird Harley-Davidson CONTACT: Glo Ciuffi

ADDRESS: 5000 Alameda Blvd. NE, Albuquerque 87113 PHONE: 505-856-1600
CITY, STATE: Albuquerque, NM ZIP CODE: 87113

ARCHITECT: Claudio Vigil and Associates CONTACT: Sandra Fairchild
ADDRESS: _____ PHONE: 842-1113
CITY, STATE: Albuquerque, NM ZIP CODE: _____

SURVEYING FIRM: Surv-Tek, Inc. CONTACT: Russ Hugg
LICENSED SURVEYOR: _____ LS no. _____
Date Survey was performed August 2011
ADDRESS: _____ PHONE: _____
CITY, STATE: _____ ZIP CODE: _____

CONTRACTOR: _____ CONTACT: _____
ADDRESS: _____ PHONE: _____
CITY, STATE: _____ ZIP CODE: _____

TYPE OF SUBMITTAL:
- ____ DRAINAGE REPORT
- XX DRAINAGE PLAN 1st SUBMITTAL
- ____ DRAINAGE PLAN RESUBMITTAL
- ____ CONCEPTUAL G & D PLAN
- XX GRADING PLAN
- ____ EROSION CONTROL PLAN
- ____ ENGINEER'S CERT (HYDROLOGY)
- ____ CLOMR/LOMR
- ____ TRAFFIC CIRCULATION LAYOUT
- ____ ENGINEER'S CERT (TCL)
- ____ ENGINEER'S CERT (DRB SITE PLAN)
- ____ OTHER (SPECIFY)

CHECK TYPE OF APPROVAL SOUGHT:
- ____ SIA/FINANCIAL GUARANTEE RELEASE
- ____ PRELIMINARY PLAT APPROVAL
- ____ S. DEV. PLAN FOR SUB'D APPROVAL
- ____ S. DEV. FOR BLDG. PERMIT APPROVAL
- ____ SECTOR PLAN APPROVAL
- ____ FINAL PLAT APPROVAL
- ____ FOUNDATION PERMIT APPROVAL
- ____ BUILDING PERMIT APPROVAL
- XX CERTIFICATE OF OCCUPANCY
- XX GRADING PERMIT APPROVAL
- XX PAVING PERMIT APPROVAL
- ____ WORK ORDER APPROVAL
- ____ OTHER (SPECIFY) **S.O. # 19**

WAS A PRE-DESIGN CONFERENCE ATTENDED:
- XX YES
- ____ NO
- XX COPY PROVIDED

OCT 6 2011
HYDROLOGY SECTION

DATE SUBMITTED: 10/06/2011 BY: Charles Easterling PE

Requests for approvals of Site Development Plans and/or Subdivision Plats shall be accompanied by a drainage submittal. The particular nature, location, and scope to the proposed development defines the degree of drainage detail. One or more of the following levels of submittal may be required based on the following:

1. **Conceptual Grading and Drainage Plan**: Required for approval of Site Development Plans greater than five (5) acres and Sector Plans.
2. **Drainage Plans**: Required for building permits, grading permits, paving permits and site plans less than five (5) acres
3. **Drainage Report**. Required for subdivision containing more than ten (10) lots or constituting five (5) acres or more.

Drainage Report

for

THUNDERBIRD HARLEY-DAVIDSON

5000 Alameda Blvd., NE

Albuquerque, NM 87113

October 6, 2011

Rev. Oct 18, 2011

Prepared by

Easterling Consultants LLC

3613 NM Hwy 528 NW

Suite E-2

Albuquerque, NM 87114

This report was prepared by me or under my direction. I am a registered Professional Engineer in the State of New Mexico and the information provided herein is true and accurate to the best of my knowledge and belief.

Charles M. Easterling P.E. #6411

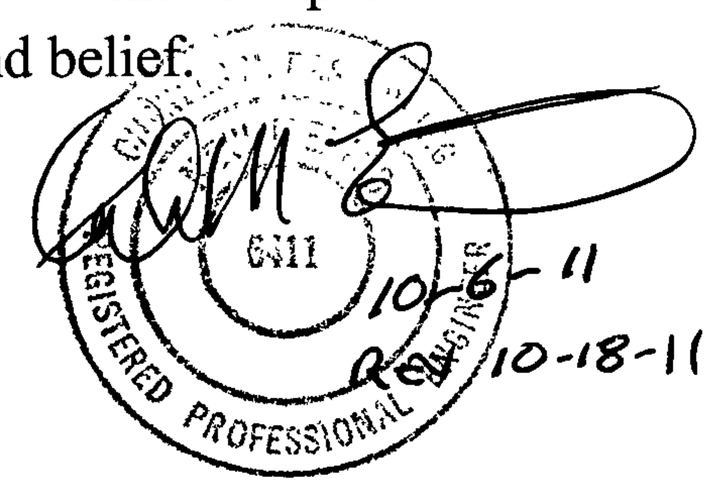

Thunderbird Harley-Davidson at 5000 Alameda Blvd. NE
Parking Lot Improvement Drainage Plan

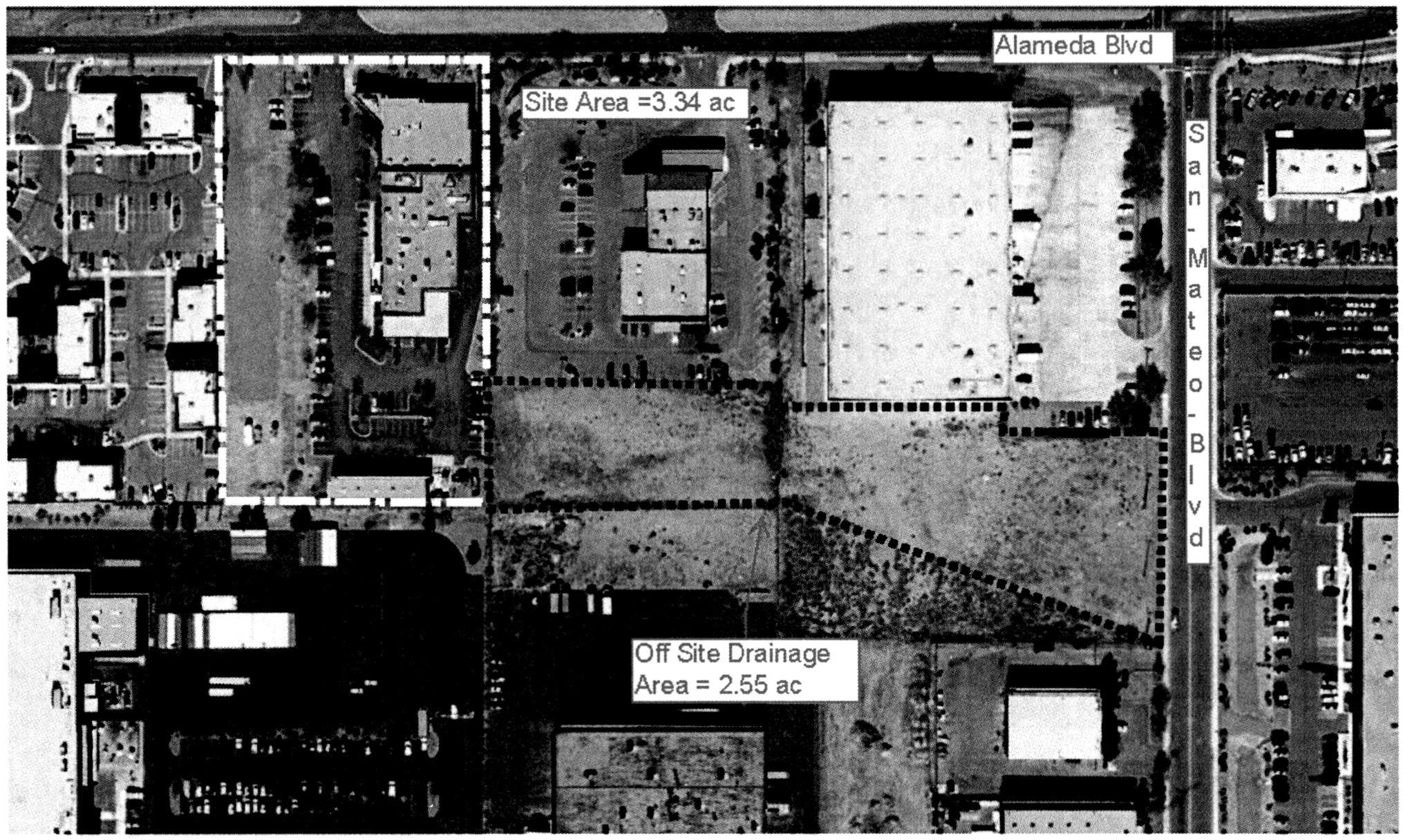

Hydrology

P_{100}-60 = 2.01 in

P_{100} - 360 = 2.35 in

P_{100} – 1440 = 2.75 in

Off Site Drainage Area = 2.55 acres Undeveloped, Natural Conditions

Treatment Type A

From AHYMO (model output attached)

Q_{100}= 3.54 cfs

V_{100}= .1130 ac-ft (4,922 ft^3)

Site Drainage Area = 3.34 acres (Old Tract F-1 @ 0.736 ac + Old Tract F-2 @ 2.604 ac)

Proposed Development- the existing Thunderbird Harley-Davidson store is located on former Tracts F-1 and F-2 of the Clifford Industrial Park. The site is fully developed, but the western tract (F-1) is currently used as a gravel parking lot and storage area. The proposal is to remodel the parking lot on both Tracts F-1 and F-2 and provide asphalt paving of the gravel portion of Tract F-1. The existing pond will be filled and a new pond constructed in the southwest corner of the site.

Background - From 1995 Isaacson & Arfman Original Drainage Report for Chic's Harley-Davidson (Old Tract F-2) and SAD 201 Storm Drain Design Report, the allowable discharge to the Alameda storm drain system in the 100 year storm was 10.3 cfs for Tract F-2 plus offsites. Since 1995, Tract F-1 was added to the site. Tract F-1 was allowed 0.93 cfs discharge to the west under undeveloped conditions as described in the drainage report for the adjacent site.

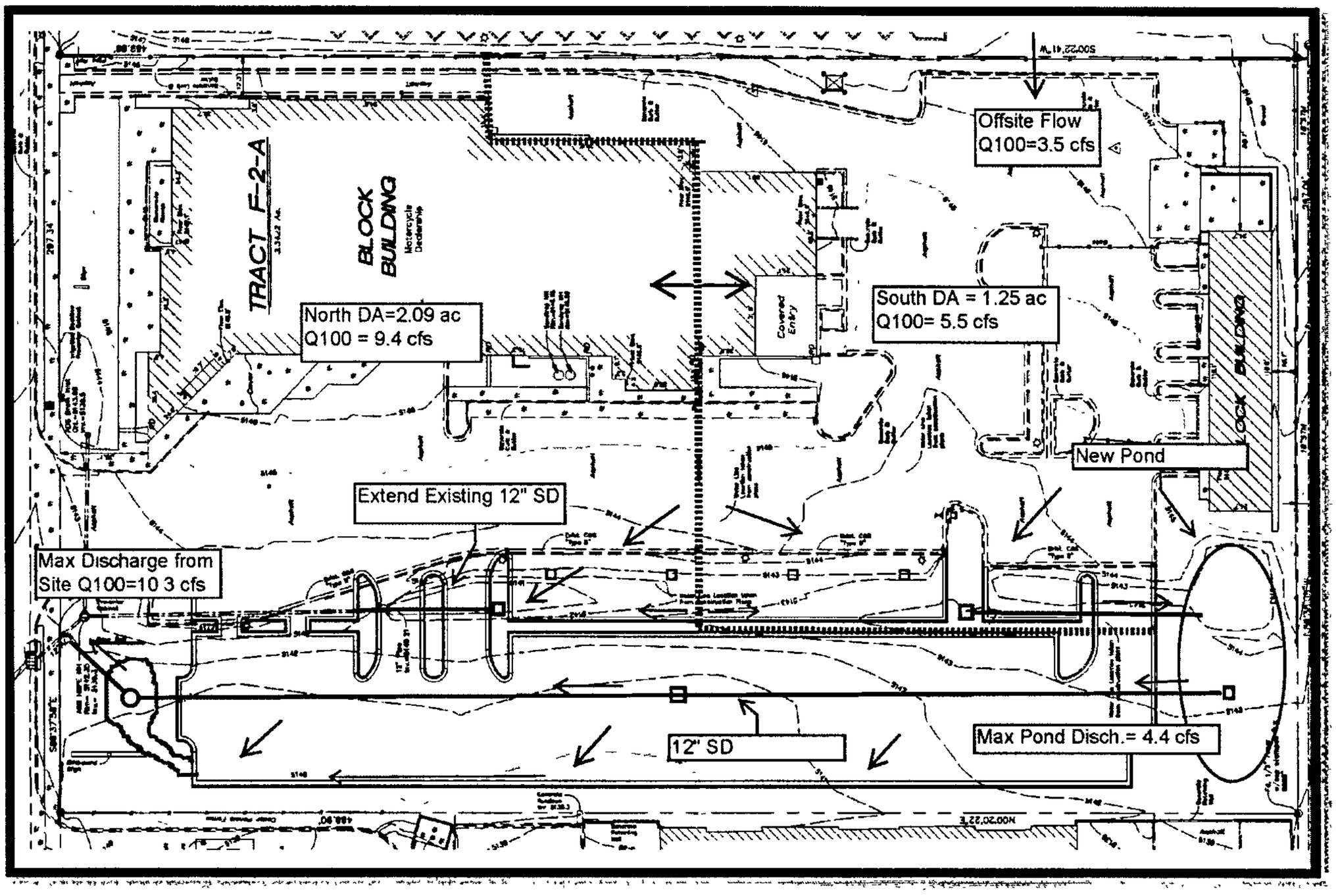

Proposed Drainage Treatment - The proposed drainage scheme is configured to continue to limit the total discharge to Alameda Blvd. to 10.3 cfs by on site ponding and controlled release via the existing 12" connection to the back of inlet in Alameda adjacent to the site. The offsite runoff (2.55 acres) and 37.5% of former Tract F-2 (1.25 ac) will be directed to a new pond constructed on the southern end of old Tract F-1. The pond will drain via a 12" storm drain to the existing collection system which currently drains into the back of an inlet in Alameda Blvd. The runoff from the building and paved parking lots will be collected via inlets in landscape areas and discharged to Alameda as is accomplished under existing conditions. The resultant maximum 100 yr runoff from the site will not exceed 10.3 cfs including both the pond discharge and the runoff from the northern portion of the site. (see Attached AHYMO summary). Where ever possible, parking lot runoff will directed to a pond or landscape area to settle sediment and the grated inlets should provide good protection from floatables reaching the Alameda storm drain system. The only runoff flowing to the west will be from the landscaped slope west of the parking lot (0.08 ac, and < 0.4 cfs) which is much less than the 0.93 cfs allowed in the previously approved drainage plans.

2.09 + 1.25 = 3.34 ac

$\frac{10.3 \text{ cfs}}{3.34 \text{ ac}}$ = 3.08 cfs/ac

Supplemental Information in response to City comments:
The following items are included in response to City of Albuquerque review comments. Sample calculations and hydraulic determinations have been provided to substantiate the capacities of the various hydraulic features of the propose drainage system.

South Pond Volume Determination:

Elev.	Area (ft^2)	Delta Vol. (ft^3)	Total Vol. (ft^3)
5139 -	0		
		395	395
5140 -	789		
		979	1374
5141 -	1169		
		1388	2762
5142 -	1606		
		2393	5155
5143 -	3180		
		3545	8700
5144 -	3910		

```
*S*   PROJECT NAME:  Thunderbird Harley
*S*   JOB NO. - 56-07-04
*S*   DATE: Oct 14, 2011
*S*
*S*   INPUT FILE NAME: thunderbird.hym
*S*   OUTPUT FILE NAME: Thunderbird.out
*S*   FILES LOCATION: 56-11-04 Thunderbird Harley\Eng\AHYMO
*S*
*S*                          Thunderbird Harley Davidson
*S*
*S*
*S*
*S*
*S*
*S*
*S*
*S*
*************************************************************
*************

*s*
*****************************************************
*     100 year storm event
RAINFALL              TYPE=2  RAIN QUARTER=0.0  RAIN ONE=2.01
                      RAIN SIX=2.35   RAIN DAY=2.75   DT=.05
*
*SEDIMENT BULK         CODE=1  FACTOR=1.00
*
*S**** COMPUTE BASIN- Off site
COMPUTE NM HYD        ID=1 HYD NO=1 DA=0.004
                      PER A=100 PER B=0 PER C=0 PER D=0
                     TP=0.152 RAIN=-1
PRINT HYD             ID=1 CODE=1
*
*S**** COMPUTE BASIN- Site South  (1.25 ac)
COMPUTE NM HYD        ID=2 HYD NO=2 DA=0.002
                      PER A=0 PER B=15 PER C=0 PER D=85
                     TP=0.133 RAIN=-1
PRINT HYD             ID=2 CODE=1
PUNCH HYD             ID=2
ADD HYD               ID=3 HYD=Off plus S ID I=2 ID II=1
PRINT HYD             ID=3 CODE=1              *
*
*
*
*S Route through  pond 12" pipe control
*
ROUTE RESERVOIR       ID=4  HYD=comb  INFLOW ID=3  CODE=1
                 OUTFLOW(CFS)     STORAGE(AC FT)   ELEV(FT)
                 0                0                5139.5
                 1.0              0.010            5140.0
                 2.67             0.021            5140.5
                 3.78             0.032            5141.0
```

```
                5.35            0.063           5142.0
                6.55            0.118           5143.0
                7.56            0.200           5144.0

*
*
PRINT HYD             ID=4 CODE=0
*
*
*Now Calculate Peak rate from northern 2.09 acres
*
*S**** COMPUTE BASIN-
COMPUTE NM HYD       ID=5 HYD NO=North DA=0.0033
                     PER A=0 PER B=15 PER C=0 PER D=85
                    TP=0.133 RAIN=-1
PRINT HYD            ID=5 CODE=1
*

PRINT HYD            ID=5
*
*
*
*
ADD HYD              ID=6 HYD=Sub1_up ID I=4 ID II=5
PRINT HYD            ID=6 CODE=1
*
*

FINISH
```

Thunderbird Harley-Davidson
Supplemental Hydraulic Calculations

Q_{100}=10.3 cfs Pipe Cap= 12.8 cfs

Pipe diameter, d_0	12	inches
Manning roughness, n ?	013	
Pressure slope (possibly ? equal to pipe slope), S_0	11 2	% rise/run
Flow depth fullness (1 or 100% for full pipe)	95	fraction

Results.

Flow, q	12.8107	cfs
Velocity, v	16.6223	ft/sec
Velocity head, h_v	4.2942	ft
Flow area	0.7707	ft^2
Wetted perimeter	2.6905	ft
Hydraulic radius	0.2864	ft
Top width, T	0 4359	ft
Froude number, F	2 21	
Shear stress (tractive force), tau	318.0163	N/m^2

Pipe Capacity of Existing 12" ADS storm drain connecting to back of inlet in Alameda

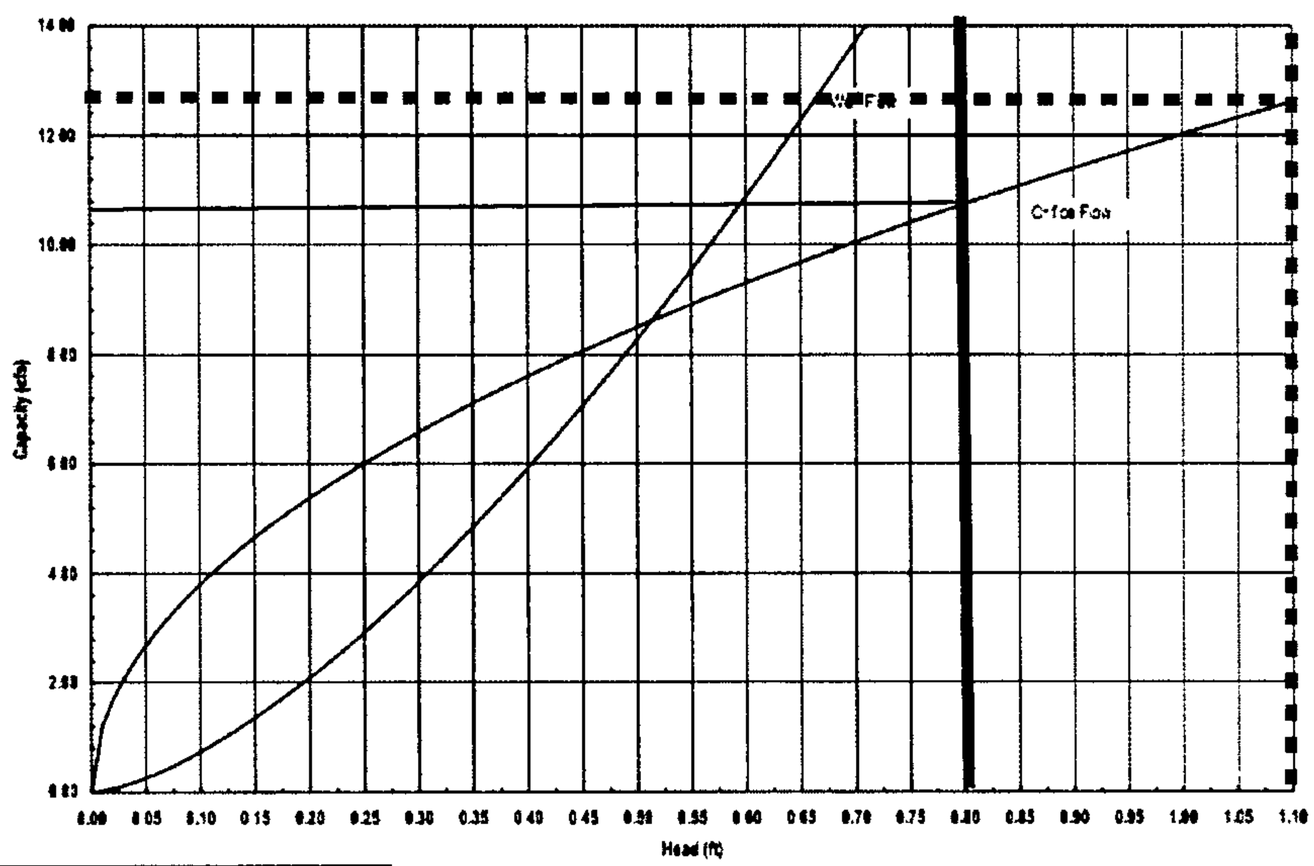

Inlet to South pond
Orifice Flow Controls !
for H=0.8' q=10.6 cfs
Q_{100}= 8.9 cfs

Inlet to SD (north)
Orifice Flow Controls!
for H>1.1' q>12.8 cfs
Q_{100}=9 cfs

30" Inlet Capacity Curves

Q_{100}= 9.0 cfs Capicty>45 cfs		
Bottom width	0	ft
Side slope 1 (horizontal / vertical)	1	
Side slope 2 (horizontal / vertical)	60	
Manning roughness, n ?	.013	
Channel slope	.004	rise/run
Flow depth	.67	ft

Results:

Flow area	13.69	ft^2
Wetted perimeter	41.15	ft
Hydraulic radius	0.33	ft
Velocity, v	3.47	ft/sec
Flow, q	47.52	cfs
Velocity head, h_v	0.19	ft
Top width, T	40.87	ft
Froude number, F	1.06	
Shear stress (tractive force), tau	8.01	N/m^2

Flow capacity against west curb line assuming 1.7% cross slope and 0.4% longitudinal slope and using City Standard 8" curb.

```
    AHYMO PROGRAM SUMMARY TABLE (AHYMO_97) -                          - VERSION:  1997.02c      RUN
DATE (MON/DAY/YR) =09/20/2011
    INPUT FILE = tbird v2.hym                                                                  USER
NO.= AHYMO-C-9803c01UNMLIB-AH

                                  FROM  TO                    PEAK         RUNOFF                TIME
TO    CFS      PAGE =   1
                       HYDROGRAPH   ID   ID         AREA     DISCHARGE      VOLUME      RUNOFF     PEAK
PER
    COMMAND        IDENTIFICATION   NO.  NO.      (SQ MI)      (CFS)        (AC-FT)    (INCHES)
(HOURS)    ACRE     NOTATION

    *S*                 PROJECT NAME:  Thunderbird Harley
    *S*                 JOB NO. - 56-07-04
    *S*                 DATE: Aug 29 2011
    *S*
    *S*                 INPUT FILE NAME: thunderbird.hym
    *S*                 OUTPUT FILE NAME: Thunderbird.out
    *S*                 FILES LOCATION: 56-11-04 Thunderbird Harley\Eng\AHYMO
    *S*
    *S*                       Thunderbird Harley Davidson
    *S*
    *S*
    *S*
    *S*
    *S*
    *S*
    *S*
    *s*
    RAINFALL  TYPE= 2
RAIN24=   2.750
    *SEDIMENT BULK        CODE=1  FACTOR=1.00
    *S**** COMPUTE BASIN- Off site
    COMPUTE NM HYD          1.00   -     1        .00400         3.54        .113       .52958
1.550    1.381 PER IMP=    .00
    *S**** COMPUTE BASIN- Site South  (1.25 ac)
    COMPUTE NM HYD          2.00   -     2        .00200         5.49        .241      2.25624
1.500    4.286 PER IMP=  85.00
```

```
    ADD HYD                    Off  2& 1   3        .00600         8.86        .354      1.10508
1.500    2.308
    *S Route through  pond 12" pipe control
    ROUTE RESERVOIR           comb    3    4        .00600         4.42        .354      1.10508
1.700    1.152 AC-FT=     .144
    *S**** COMPUTE BASIN-
    COMPUTE NM HYD           North   -     5        .00330         9.04        .397      2.25624
1.500    4.281 PER IMP=  85.00
    ADD HYD                Sub1_up  4& 5   6        .00930        10.27        .751      1.51340
1.500    1.726
    FINISH
```

WHEN ARE INLINE DRAINS USED?

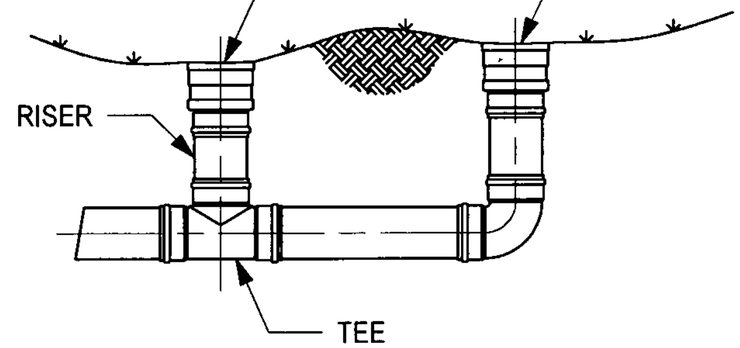

TYPICAL INSTALLATIONS

TYPICAL INSTALLATION OF NYLOPLAST DRAIN BASIN AND INLINE DRAIN

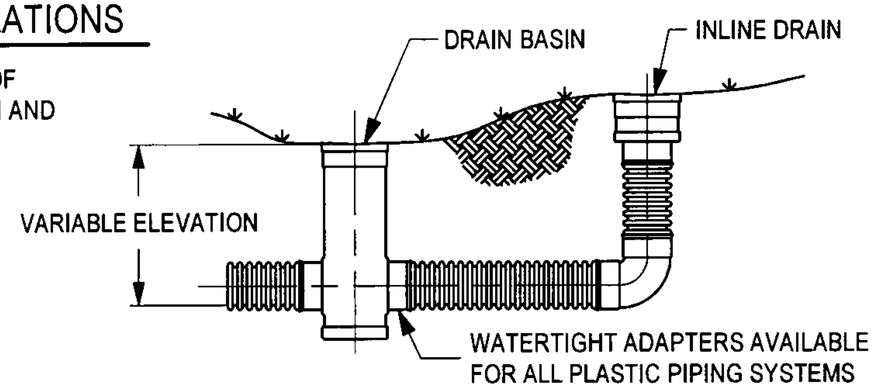

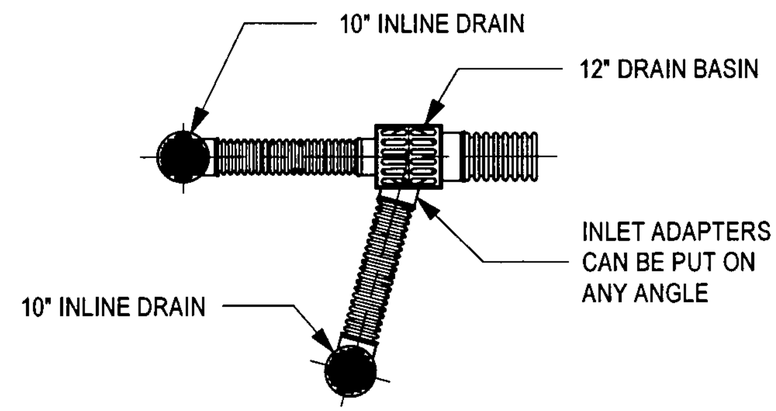

WHEN ARE DRAIN BASINS USED?

1: CHANGE ELEVATION

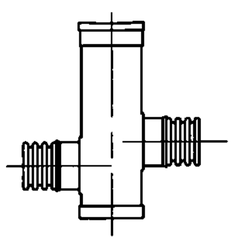

2: CHANGE DIAMETER

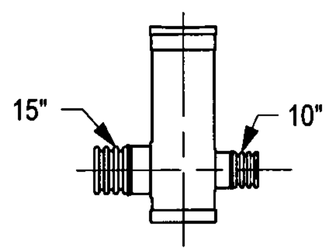

3: CHANGE PIPE

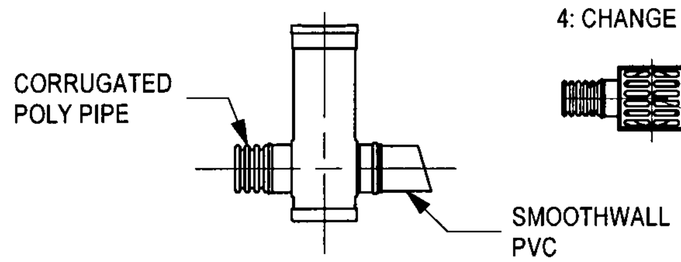

4: CHANGE DIRECTION

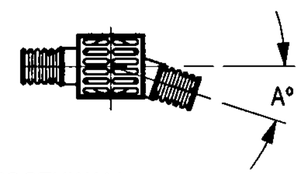

AVAILABLE IN SIZES 8" THROUGH 30".
ADAPT TO PIPE SIZES 4" THROUGH 30".

THIS PRINT DISCLOSES SUBJECT MATTER IN WHICH NYLOPLAST HAS PROPRIETARY RIGHTS. THE RECEIPT OR POSSESSION OF THIS PRINT DOES NOT CONFER, TRANSFER, OR LICENSE THE USE OF THE DESIGN OR TECHNICAL INFORMATION SHOWN HEREIN REPRODUCTION OF THIS PRINT OR ANY INFORMATION CONTAINED HEREIN, OR MANUFACTURE OF ANY ARTICLE HEREFROM, FOR THE DISCLOSURE TO OTHERS IS FORBIDDEN, EXCEPT BY SPECIFIC WRITTEN PERMISSION FROM NYLOPLAST.

DRAWN BY AWA	MATERIAL	Nyloplast	3130 VERONA AVE BUFORD, GA 30518 PHN (770) 932-2443 FAX (770) 932-2490 www.nyloplast-us.com
DATE 10AUG00			
APPD BY CJA	PROJECT NO./NAME	TITLE	
DATE 10AUG00	DRAIN BASIN / INLINE DRAIN	8" - 30" TYPICAL INSTALLATION OPTIONS	
DWG SIZE A	SCALE 1:90 SHEET 1 OF 1	DWG NO. 7001-110-042	REV B

NYLOPLAST DRAIN BASIN

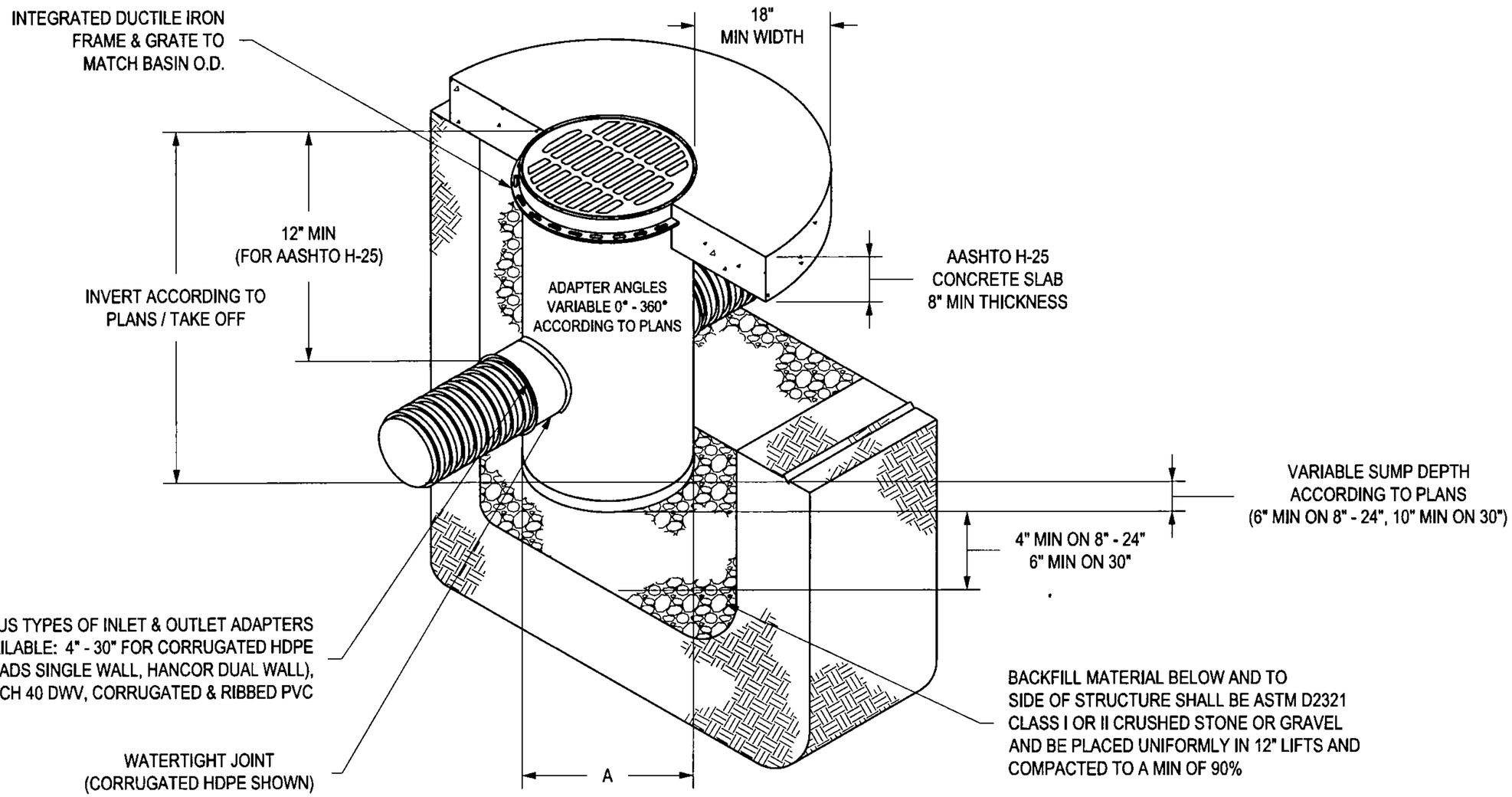

WATERTIGHT JOINT
(CORRUGATED HDPE SHOWN)

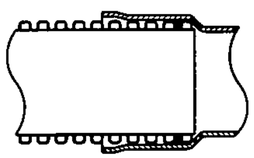

1- 8" - 30" GRATES/SOLID COVERS SHALL BE DUCTILE IRON PER ASTM A536 GRADE 70-50-05
2- 8", 10", 18", 24" & 30" FRAMES SHALL BE DUCTILE IRON PER ASTM A536 GRADE 70-50-05
3- 12" & 15" FRAMES SHALL BE CAST IRON PER ASTM A-48-83 CLASS 30B
4- DRAIN BASIN TO BE CUSTOM MANUFACTURED ACCORDING TO PLAN DETAILS
5- DRAINAGE CONNECTION STUB JOINT TIGHTNESS SHALL CONFORM TO ASTM D3212 FOR CORRUGATED HDPE (ADS & HANCOR DUAL WALL) & SDR 35 PVC
6- FOR COMPLETE DESIGN AND PRODUCT INFORMATION: **WWW.NYLOPLAST-US.COM**
7- TO ORDER CALL: **800-821-6710**

A	PART #	GRATE OPTIONS		
8"	2808AG	PEDESTRIAN LIGHT DUTY	STANDARD LIGHT DUTY	SOLID LIGHT DUTY
10"	2810AG	PEDESTRIAN LIGHT DUTY	STANDARD LIGHT DUTY	SOLID LIGHT DUTY
12"	2812AG	PEDESTRIAN AASHTO H-10	STANDARD AASHTO H-25	SOLID AASHTO H-25
15"	2815AG	PEDESTRIAN AASHTO H-10	STANDARD AASHTO H-25	SOLID AASHTO H-25

A	PART #	GRATE OPTIONS		
18"	2818AG	PEDESTRIAN AASHTO H-10	STANDARD AASHTO H-25	SOLID AASHTO H-25
24"	2824AG	PEDESTRIAN AASHTO H-10	STANDARD AASHTO H-25	SOLID AASHTO H-25
30"	2830AG	N/A	STANDARD AASHTO H-25	SOLID AASHTO H-25

DRAWN BY EBC	MATERIAL	Nyloplast	3130 VERONA AVE BUFORD, GA 30518 PHN (770) 932-2443 FAX (770) 932-2490 www.nyloplast-us.com
DATE 1-23-06			
APPD BY CJA	PROJECT NO./NAME	TITLE DRAIN BASIN WITH STANDARD GRATE QUICK SPEC INSTALLATION DETAIL	
DATE 1-23-06			
DWG SIZE A	SCALE NTS SHEET 1 OF 1	DWG NO. 7001-110-144	REV A

```
    AHYMO PROGRAM (AHYMO_97) -                          - Version:  1997.02c
         RUN DATE (MON/DAY/YR) = 09/20/2011
         START TIME (HR:MIN:SEC) = 08:50:46     USER NO.= AHYMO-C-9803c01UNMLIB-AH
         INPUT FILE = tbird v2.hym

*S*                 PROJECT NAME:  Thunderbird Harley
*S*                 JOB NO. - 56-07-04
*S*                 DATE: Aug 29 2011
*S*
*S*                 INPUT FILE NAME: thunderbird.hym
*S*                 OUTPUT FILE NAME: Thunderbird.out
*S*                 FILES LOCATION: 56-11-04 Thunderbird Harley\Eng\AHYMO
*S*
*S*                       Thunderbird Harley Davidson
*S*
*S*
*S*
*S*
*S*
*S*
*S*
*S*
*******************************************************************************

*s*
*****************************************************
*                   100 year storm event
RAINFALL             TYPE=2  RAIN QUARTER=0.0  RAIN ONE=2.01
                     RAIN SIX=2.35   RAIN DAY=2.75   DT=.05

               COMPUTED 24-HOUR RAINFALL DISTRIBUTION BASED ON NOAA ATLAS 2 - PEAK AT 1.40 HR.
               DT =    .050000 HOURS       END TIME =    24.000000 HOURS
                  .0000   .0024   .0049   .0075   .0102   .0130   .0158
                  .0188   .0219   .0252   .0286   .0321   .0358   .0397
                  .0439   .0482   .0529   .0578   .0631   .0689   .0751
                  .0836   .0930   .1201   .1842   .2944   .4649   .7103
                 1.0460  1.3107  1.4303  1.5302  1.6176  1.6959  1.7667
                 1.8313  1.8906  1.9452  1.9955  2.0421  2.0851  2.0946
```

2.1034	2.1115	2.1191	2.1262	2.1330	2.1394	2.1455
2.1513	2.1569	2.1622	2.1673	2.1723	2.1771	2.1817
2.1862	2.1905	2.1948	2.1989	2.2028	2.2067	2.2105
2.2142	2.2178	2.2213	2.2248	2.2282	2.2315	2.2347
2.2379	2.2410	2.2440	2.2470	2.2500	2.2529	2.2557
2.2585	2.2613	2.2640	2.2666	2.2693	2.2719	2.2744
2.2769	2.2794	2.2818	2.2842	2.2866	2.2889	2.2913
2.2935	2.2958	2.2980	2.3002	2.3024	2.3046	2.3067
2.3088	2.3109	2.3129	2.3150	2.3170	2.3190	2.3209
2.3229	2.3248	2.3267	2.3286	2.3305	2.3323	2.3342
2.3360	2.3378	2.3396	2.3414	2.3431	2.3449	2.3466
2.3483	2.3500	2.3517	2.3534	2.3551	2.3569	2.3586
2.3602	2.3619	2.3636	2.3653	2.3669	2.3686	2.3703
2.3719	2.3736	2.3752	2.3768	2.3785	2.3801	2.3817
2.3833	2.3849	2.3865	2.3881	2.3897	2.3913	2.3929
2.3944	2.3960	2.3976	2.3991	2.4007	2.4022	2.4038
2.4053	2.4068	2.4084	2.4099	2.4114	2.4129	2.4144
2.4159	2.4174	2.4189	2.4204	2.4219	2.4234	2.4248
2.4263	2.4278	2.4292	2.4307	2.4322	2.4336	2.4350
2.4365	2.4379	2.4394	2.4408	2.4422	2.4436	2.4450
2.4464	2.4478	2.4493	2.4506	2.4520	2.4534	2.4548
2.4562	2.4576	2.4589	2.4603	2.4617	2.4630	2.4644
2.4658	2.4671	2.4685	2.4698	2.4711	2.4725	2.4738
2.4751	2.4765	2.4778	2.4791	2.4804	2.4817	2.4830
2.4843	2.4856	2.4869	2.4882	2.4895	2.4908	2.4921
2.4934	2.4946	2.4959	2.4972	2.4984	2.4997	2.5010
2.5022	2.5035	2.5047	2.5060	2.5072	2.5085	2.5097
2.5109	2.5122	2.5134	2.5146	2.5158	2.5170	2.5183
2.5195	2.5207	2.5219	2.5231	2.5243	2.5255	2.5267
2.5279	2.5291	2.5303	2.5314	2.5326	2.5338	2.5350
2.5361	2.5373	2.5385	2.5396	2.5408	2.5420	2.5431
2.5443	2.5454	2.5466	2.5477	2.5488	2.5500	2.5511
2.5523	2.5534	2.5545	2.5556	2.5568	2.5579	2.5590
2.5601	2.5612	2.5623	2.5635	2.5646	2.5657	2.5668
2.5679	2.5690	2.5701	2.5711	2.5722	2.5733	2.5744
2.5755	2.5766	2.5776	2.5787	2.5798	2.5809	2.5819
2.5830	2.5841	2.5851	2.5862	2.5872	2.5883	2.5893
2.5904	2.5914	2.5925	2.5935	2.5946	2.5956	2.5966

```
2.5977  2.5987  2.5997  2.6008  2.6018  2.6028  2.6038
2.6049  2.6059  2.6069  2.6079  2.6089  2.6099  2.6109
2.6119  2.6129  2.6139  2.6149  2.6159  2.6169  2.6179
2.6189  2.6199  2.6209  2.6219  2.6229  2.6238  2.6248
2.6258  2.6268  2.6278  2.6287  2.6297  2.6307  2.6316
2.6326  2.6336  2.6345  2.6355  2.6364  2.6374  2.6384
2.6393  2.6403  2.6412  2.6421  2.6431  2.6440  2.6450
2.6459  2.6469  2.6478  2.6487  2.6497  2.6506  2.6515
2.6524  2.6534  2.6543  2.6552  2.6561  2.6571  2.6580
2.6589  2.6598  2.6607  2.6616  2.6625  2.6634  2.6644
2.6653  2.6662  2.6671  2.6680  2.6689  2.6698  2.6707
2.6715  2.6724  2.6733  2.6742  2.6751  2.6760  2.6769
2.6778  2.6786  2.6795  2.6804  2.6813  2.6821  2.6830
2.6839  2.6848  2.6856  2.6865  2.6874  2.6882  2.6891
2.6900  2.6908  2.6917  2.6925  2.6934  2.6942  2.6951
2.6959  2.6968  2.6976  2.6985  2.6993  2.7002  2.7010
2.7019  2.7027  2.7035  2.7044  2.7052  2.7061  2.7069
2.7077  2.7085  2.7094  2.7102  2.7110  2.7119  2.7127
2.7135  2.7143  2.7151  2.7160  2.7168  2.7176  2.7184
2.7192  2.7200  2.7209  2.7217  2.7225  2.7233  2.7241
2.7249  2.7257  2.7265  2.7273  2.7281  2.7289  2.7297
2.7305  2.7313  2.7321  2.7329  2.7337  2.7344  2.7352
2.7360  2.7368  2.7376  2.7384  2.7392  2.7399  2.7407
2.7415  2.7423  2.7431  2.7438  2.7446  2.7454  2.7462
2.7469  2.7477  2.7485  2.7492  2.7500

*
*SEDIMENT BULK        CODE=1  FACTOR=1.00
*
*S**** COMPUTE BASIN- Off site
COMPUTE NM HYD       ID=1 HYD NO=1 DA=0.004
                     PER A=100 PER B=0 PER C=0 PER D=0
                                   TP=0.152 RAIN=-1

     K =   .182622HR    TP =   .152000HR    K/TP RATIO =  1.201459     SHAPE CONSTANT, N =
2.957910
     UNIT PEAK =   7.3256    CFS   UNIT VOLUME =    .9975       B =   278.37      P60 = 2.0100
     AREA =      .004000 SQ MI    IA =    .65000 INCHES    INF =   1.67000 INCHES PER HOUR
```

```
     RUNOFF COMPUTED BY INITIAL ABSTRACTION/INFILTRATION NUMBER METHOD - DT =   .050000

PRINT HYD            ID=1 CODE=1

                                     OUTFLOW HYDROGRAPH REACH     1.00


    RUNOFF VOLUME =      .52958 INCHES     =        .1130 ACRE-FEET
    PEAK DISCHARGE RATE =       3.54 CFS  AT   1.550 HOURS   BASIN AREA =   .0040 SQ. MI.



*
*S**** COMPUTE BASIN- Site South  (1.25 ac)
COMPUTE NM HYD       ID=2 HYD NO=2 DA=0.002
                     PER A=0 PER B=15 PER C=0 PER D=85
                                  TP=0.133 RAIN=-1

     K =   .072485HR    TP =   .133000HR    K/TP RATIO =   .545000     SHAPE CONSTANT, N =
7.106420
          UNIT PEAK =   6.7268    CFS   UNIT VOLUME =    .9976       B =   526.28      P60 = 2.0100
          AREA =      .001700 SQ MI    IA =    .10000 INCHES    INF =    .04000 INCHES PER HOUR
          RUNOFF COMPUTED BY INITIAL ABSTRACTION/INFILTRATION NUMBER METHOD - DT =   .050000


          K =   .131790HR    TP =   .133000HR    K/TP RATIO =   .990905     SHAPE CONSTANT, N =
3.563124
          UNIT PEAK =   .73287    CFS   UNIT VOLUME =    .9821       B =   324.91      P60 = 2.0100
          AREA =      .000300 SQ MI    IA =    .50000 INCHES    INF =   1.25000 INCHES PER HOUR
          RUNOFF COMPUTED BY INITIAL ABSTRACTION/INFILTRATION NUMBER METHOD - DT =   .050000

     PRINT HYD            ID=2 CODE=1

                                     OUTFLOW HYDROGRAPH REACH     2.00


        RUNOFF VOLUME =     2.25624 INCHES     =        .2407 ACRE-FEET
        PEAK DISCHARGE RATE =       5.49 CFS  AT   1.500 HOURS   BASIN AREA =   .0020 SQ. MI.
```

```
PUNCH HYD            ID=2
ADD HYD              ID=3 HYD=Off plus S ID I=2 ID II=1
PRINT HYD            ID=3 CODE=1              *

                                    HYDROGRAPH FROM AREA Off


    RUNOFF VOLUME =     1.10508 INCHES     =        .3536 ACRE-FEET
    PEAK DISCHARGE RATE =       8.86 CFS  AT   1.500 HOURS   BASIN AREA =   .0060 SQ. MI.


*
*
*
*S Route through  pond 12" pipe control
*
ROUTE RESERVOIR         ID=4  HYD=comb  INFLOW ID=3  CODE=1
                              OUTFLOW(CFS)      STORAGE(AC FT)    ELEV(FT)
                              0                 0                 5140.0
                              1.0               0.061             5140.5
                              2.0               0.122             5141.0
                              1.65              0.127             5141.5
                              3.3               0.132             5142.0
                              4.22              0.141             5143.0
                              4.96              0.151             5144.0
                              5.62              0.161             5145.0
                              6.2               0.170             5146.0

  *  *  *  *  *  *  *  *  *  *  *  *  *  *  *  *  *

    TIME       INFLOW    ELEV      VOLUME    OUTFLOW
    (HRS)      (CFS)     (FEET)    (AC-FT)   (CFS)

      .00        .00   5140.00       .000       .00
```

.05	.00	5140.00	.000	.00
.10	.00	5140.00	.000	.00
.15	.00	5140.00	.000	.00
.20	.00	5140.00	.000	.00
.25	.00	5140.00	.000	.00
.30	.00	5140.00	.000	.00
.35	.00	5140.00	.000	.00
.40	.00	5140.00	.000	.00
.45	.00	5140.00	.000	.00
.50	.00	5140.00	.000	.00
.55	.00	5140.00	.000	.00
.60	.00	5140.00	.000	.00
.65	.00	5140.00	.000	.00
.70	.00	5140.00	.000	.00
.75	.00	5140.00	.000	.00
.80	.00	5140.00	.000	.00
.85	.00	5140.00	.000	.00
.90	.00	5140.00	.000	.00
.95	.00	5140.00	.000	.00
1.00	.00	5140.00	.000	.00
1.05	.00	5140.00	.000	.00
1.10	.00	5140.00	.000	.00
1.15	.01	5140.00	.000	.00
1.20	.15	5140.00	.000	.01
1.25	.54	5140.01	.002	.03
1.30	1.18	5140.04	.005	.08
1.35	2.23	5140.09	.012	.19
1.40	4.42	5140.20	.024	.39
1.45	7.29	5140.38	.046	.75
1.50	8.86	5140.62	.075	1.23
1.55	8.34	5140.86	.105	1.71
1.60	6.89	5141.63	.128	2.06
1.65	5.53	5142.99	.141	4.21
1.70	4.47	5143.27	.144	4.42
1.75	3.68	5143.15	.143	4.33
1.80	3.08	5142.80	.139	4.04
1.85	2.61	5142.35	.135	3.62
1.90	2.24	5141.93	.131	3.08

1.95	1.94	5141.69	.129	2.27
2.00	1.71	5140.95	.116	1.91
2.05	1.52	5140.83	.102	1.67
2.10	1.22	5140.87	.106	1.74
2.15	.92	5140.99	.120	1.97
2.20	.73	5140.97	.118	1.93
2.25	.60	5140.92	.113	1.85
2.30	.52	5140.88	.108	1.76
2.35	.46	5140.84	.102	1.68
2.40	.41	5140.80	.098	1.60
2.45	.36	5140.76	.093	1.52
2.50	.32	5140.72	.088	1.44
2.55	.29	5140.68	.083	1.37
2.60	.26	5140.65	.079	1.30
2.65	.23	5140.61	.075	1.23
2.70	.20	5140.58	.071	1.16
2.75	.18	5140.55	.067	1.10

TIME (HRS)	INFLOW (CFS)	ELEV (FEET)	VOLUME (AC-FT)	OUTFLOW (CFS)
2.80	.17	5140.52	.063	1.04
2.85	.15	5140.49	.060	.98
2.90	.14	5140.46	.056	.92
2.95	.13	5140.44	.053	.87
3.00	.12	5140.41	.050	.82
3.05	.11	5140.39	.047	.78
3.10	.10	5140.37	.045	.73
3.15	.09	5140.35	.042	.69
3.20	.09	5140.33	.040	.65
3.25	.08	5140.31	.037	.61
3.30	.08	5140.29	.035	.58
3.35	.07	5140.27	.033	.55
3.40	.07	5140.26	.031	.51
3.45	.06	5140.24	.030	.49
3.50	.06	5140.23	.028	.46
3.55	.06	5140.22	.026	.43
3.60	.06	5140.20	.025	.41

3.65	.05	5140.19	.023	.38
3.70	.05	5140.18	.022	.36
3.75	.05	5140.17	.021	.34
3.80	.05	5140.16	.020	.32
3.85	.04	5140.15	.019	.30
3.90	.04	5140.14	.018	.29
3.95	.04	5140.14	.017	.27
4.00	.04	5140.13	.016	.26
4.05	.04	5140.12	.015	.24
4.10	.04	5140.11	.014	.23
4.15	.04	5140.11	.013	.22
4.20	.04	5140.10	.012	.20
4.25	.04	5140.10	.012	.19
4.30	.04	5140.09	.011	.18
4.35	.03	5140.09	.011	.17
4.40	.03	5140.08	.010	.16
4.45	.03	5140.08	.009	.16
4.50	.03	5140.07	.009	.15
4.55	.03	5140.07	.009	.14
4.60	.03	5140.07	.008	.13
4.65	.03	5140.06	.008	.13
4.70	.03	5140.06	.007	.12
4.75	.03	5140.06	.007	.11
4.80	.03	5140.05	.007	.11
4.85	.03	5140.05	.006	.10
4.90	.03	5140.05	.006	.10
4.95	.03	5140.05	.006	.09
5.00	.03	5140.04	.005	.09
5.05	.03	5140.04	.005	.09
5.10	.03	5140.04	.005	.08
5.15	.03	5140.04	.005	.08
5.20	.03	5140.04	.005	.08
5.25	.03	5140.04	.004	.07
5.30	.03	5140.04	.004	.07
5.35	.03	5140.03	.004	.07
5.40	.03	5140.03	.004	.07
5.45	.03	5140.03	.004	.06
5.50	.03	5140.03	.004	.06

5.55	.03	5140.03	.004	.06

TIME (HRS)	INFLOW (CFS)	ELEV (FEET)	VOLUME (AC-FT)	OUTFLOW (CFS)
5.60	.03	5140.03	.004	.06
5.65	.03	5140.03	.003	.06
5.70	.03	5140.03	.003	.05
5.75	.03	5140.03	.003	.05
5.80	.04	5140.03	.003	.05
5.85	.04	5140.03	.003	.05
5.90	.04	5140.02	.003	.05
5.95	.04	5140.02	.003	.05
6.00	.04	5140.02	.003	.05
6.05	.04	5140.02	.003	.05
6.10	.04	5140.02	.003	.05
6.15	.04	5140.02	.003	.05
6.20	.04	5140.02	.003	.05
6.25	.04	5140.02	.003	.05
6.30	.04	5140.02	.003	.04
6.35	.04	5140.02	.003	.04
6.40	.04	5140.02	.003	.04
6.45	.04	5140.02	.003	.04
6.50	.04	5140.02	.003	.04
6.55	.04	5140.02	.003	.04
6.60	.04	5140.02	.003	.04
6.65	.04	5140.02	.003	.04
6.70	.04	5140.02	.003	.04
6.75	.04	5140.02	.003	.04
6.80	.04	5140.02	.002	.04
6.85	.04	5140.02	.002	.04
6.90	.04	5140.02	.002	.04
6.95	.04	5140.02	.002	.04
7.00	.04	5140.02	.002	.04
7.05	.04	5140.02	.002	.04
7.10	.04	5140.02	.002	.04
7.15	.04	5140.02	.002	.04
7.20	.04	5140.02	.002	.04

7.25	.04	5140.02	.002	.04
7.30	.04	5140.02	.002	.04
7.35	.04	5140.02	.002	.04
7.40	.03	5140.02	.002	.04
7.45	.03	5140.02	.002	.04
7.50	.03	5140.02	.002	.04
7.55	.03	5140.02	.002	.04
7.60	.03	5140.02	.002	.04
7.65	.03	5140.02	.002	.04
7.70	.03	5140.02	.002	.04
7.75	.03	5140.02	.002	.04
7.80	.03	5140.02	.002	.04
7.85	.03	5140.02	.002	.04
7.90	.03	5140.02	.002	.04
7.95	.03	5140.02	.002	.04
8.00	.03	5140.02	.002	.04
8.05	.03	5140.02	.002	.04
8.10	.03	5140.02	.002	.04
8.15	.03	5140.02	.002	.04
8.20	.03	5140.02	.002	.04
8.25	.03	5140.02	.002	.03
8.30	.03	5140.02	.002	.03
8.35	.03	5140.02	.002	.03

TIME (HRS)	INFLOW (CFS)	ELEV (FEET)	VOLUME (AC-FT)	OUTFLOW (CFS)
8.40	.03	5140.02	.002	.03
8.45	.03	5140.02	.002	.03
8.50	.03	5140.02	.002	.03
8.55	.03	5140.02	.002	.03
8.60	.03	5140.02	.002	.03
8.65	.03	5140.02	.002	.03
8.70	.03	5140.02	.002	.03
8.75	.03	5140.02	.002	.03
8.80	.03	5140.02	.002	.03
8.85	.03	5140.02	.002	.03
8.90	.03	5140.02	.002	.03

8.95	.03	5140.02	.002	.03
9.00	.03	5140.02	.002	.03
9.05	.03	5140.02	.002	.03
9.10	.03	5140.02	.002	.03
9.15	.03	5140.02	.002	.03
9.20	.03	5140.02	.002	.03
9.25	.03	5140.02	.002	.03
9.30	.03	5140.02	.002	.03
9.35	.03	5140.02	.002	.03
9.40	.03	5140.02	.002	.03
9.45	.03	5140.02	.002	.03
9.50	.03	5140.02	.002	.03
9.55	.03	5140.02	.002	.03
9.60	.03	5140.02	.002	.03
9.65	.03	5140.02	.002	.03
9.70	.03	5140.02	.002	.03
9.75	.03	5140.02	.002	.03
9.80	.03	5140.02	.002	.03
9.85	.03	5140.02	.002	.03
9.90	.03	5140.02	.002	.03
9.95	.03	5140.02	.002	.03
10.00	.03	5140.02	.002	.03
10.05	.03	5140.02	.002	.03
10.10	.03	5140.02	.002	.03
10.15	.03	5140.02	.002	.03
10.20	.03	5140.02	.002	.03
10.25	.03	5140.02	.002	.03
10.30	.03	5140.02	.002	.03
10.35	.03	5140.02	.002	.03
10.40	.03	5140.02	.002	.03
10.45	.03	5140.02	.002	.03
10.50	.03	5140.02	.002	.03
10.55	.03	5140.02	.002	.03
10.60	.03	5140.02	.002	.03
10.65	.03	5140.02	.002	.03
10.70	.03	5140.01	.002	.03
10.75	.03	5140.01	.002	.03
10.80	.03	5140.01	.002	.03

10.85	.03	5140.01	.002	.03
10.90	.03	5140.01	.002	.03
10.95	.03	5140.01	.002	.03
11.00	.03	5140.01	.002	.03
11.05	.03	5140.01	.002	.03
11.10	.03	5140.01	.002	.03
11.15	.03	5140.01	.002	.03

TIME (HRS)	INFLOW (CFS)	ELEV (FEET)	VOLUME (AC-FT)	OUTFLOW (CFS)
11.20	.03	5140.01	.002	.03
11.25	.03	5140.01	.002	.03
11.30	.03	5140.01	.002	.03
11.35	.03	5140.01	.002	.03
11.40	.03	5140.01	.002	.03
11.45	.03	5140.01	.002	.03
11.50	.03	5140.01	.002	.03
11.55	.03	5140.01	.002	.03
11.60	.03	5140.01	.002	.03
11.65	.03	5140.01	.002	.03
11.70	.03	5140.01	.002	.03
11.75	.03	5140.01	.002	.03
11.80	.03	5140.01	.002	.03
11.85	.03	5140.01	.002	.03
11.90	.03	5140.01	.002	.03
11.95	.03	5140.01	.002	.03
12.00	.03	5140.01	.002	.03
12.05	.03	5140.01	.002	.03
12.10	.03	5140.01	.002	.03
12.15	.03	5140.01	.002	.03
12.20	.03	5140.01	.002	.03
12.25	.03	5140.01	.002	.03
12.30	.03	5140.01	.002	.03
12.35	.03	5140.01	.002	.03
12.40	.03	5140.01	.002	.03
12.45	.03	5140.01	.002	.03
12.50	.03	5140.01	.002	.03

12.55	.03	5140.01	.002	.03
12.60	.03	5140.01	.002	.03
12.65	.03	5140.01	.002	.03
12.70	.03	5140.01	.002	.03
12.75	.03	5140.01	.002	.03
12.80	.03	5140.01	.002	.03
12.85	.03	5140.01	.002	.03
12.90	.03	5140.01	.002	.03
12.95	.03	5140.01	.002	.03
13.00	.03	5140.01	.002	.03
13.05	.03	5140.01	.002	.03
13.10	.03	5140.01	.002	.03
13.15	.03	5140.01	.002	.03
13.20	.02	5140.01	.002	.03
13.25	.03	5140.01	.002	.03
13.30	.03	5140.01	.002	.03
13.35	.03	5140.01	.002	.03
13.40	.03	5140.01	.002	.03
13.45	.02	5140.01	.002	.03
13.50	.02	5140.01	.002	.03
13.55	.02	5140.01	.002	.03
13.60	.02	5140.01	.002	.03
13.65	.02	5140.01	.002	.03
13.70	.02	5140.01	.002	.03
13.75	.02	5140.01	.002	.03
13.80	.02	5140.01	.002	.03
13.85	.02	5140.01	.002	.03
13.90	.02	5140.01	.002	.03
13.95	.02	5140.01	.002	.03

TIME (HRS)	INFLOW (CFS)	ELEV (FEET)	VOLUME (AC-FT)	OUTFLOW (CFS)
14.00	.02	5140.01	.002	.03
14.05	.02	5140.01	.002	.03
14.10	.02	5140.01	.002	.03
14.15	.02	5140.01	.002	.02
14.20	.02	5140.01	.002	.02

14.25	.02	5140.01	.002	.02
14.30	.02	5140.01	.002	.02
14.35	.02	5140.01	.002	.02
14.40	.02	5140.01	.002	.02
14.45	.02	5140.01	.002	.02
14.50	.02	5140.01	.001	.02
14.55	.02	5140.01	.001	.02
14.60	.02	5140.01	.001	.02
14.65	.02	5140.01	.001	.02
14.70	.02	5140.01	.001	.02
14.75	.02	5140.01	.001	.02
14.80	.02	5140.01	.001	.02
14.85	.02	5140.01	.001	.02
14.90	.02	5140.01	.001	.02
14.95	.02	5140.01	.001	.02
15.00	.02	5140.01	.001	.02
15.05	.02	5140.01	.001	.02
15.10	.02	5140.01	.001	.02
15.15	.02	5140.01	.001	.02
15.20	.02	5140.01	.001	.02
15.25	.02	5140.01	.001	.02
15.30	.02	5140.01	.001	.02
15.35	.02	5140.01	.001	.02
15.40	.02	5140.01	.001	.02
15.45	.02	5140.01	.001	.02
15.50	.02	5140.01	.001	.02
15.55	.02	5140.01	.001	.02
15.60	.02	5140.01	.001	.02
15.65	.02	5140.01	.001	.02
15.70	.02	5140.01	.001	.02
15.75	.02	5140.01	.001	.02
15.80	.02	5140.01	.001	.02
15.85	.02	5140.01	.001	.02
15.90	.02	5140.01	.001	.02
15.95	.02	5140.01	.001	.02
16.00	.02	5140.01	.001	.02
16.05	.02	5140.01	.001	.02
16.10	.02	5140.01	.001	.02

16.15	.02	5140.01	.001	.02
16.20	.02	5140.01	.001	.02
16.25	.02	5140.01	.001	.02
16.30	.02	5140.01	.001	.02
16.35	.02	5140.01	.001	.02
16.40	.02	5140.01	.001	.02
16.45	.02	5140.01	.001	.02
16.50	.02	5140.01	.001	.02
16.55	.02	5140.01	.001	.02
16.60	.02	5140.01	.001	.02
16.65	.02	5140.01	.001	.02
16.70	.02	5140.01	.001	.02
16.75	.02	5140.01	.001	.02

TIME (HRS)	INFLOW (CFS)	ELEV (FEET)	VOLUME (AC-FT)	OUTFLOW (CFS)
16.80	.02	5140.01	.001	.02
16.85	.02	5140.01	.001	.02
16.90	.02	5140.01	.001	.02
16.95	.02	5140.01	.001	.02
17.00	.02	5140.01	.001	.02
17.05	.02	5140.01	.001	.02
17.10	.02	5140.01	.001	.02
17.15	.02	5140.01	.001	.02
17.20	.02	5140.01	.001	.02
17.25	.02	5140.01	.001	.02
17.30	.02	5140.01	.001	.02
17.35	.02	5140.01	.001	.02
17.40	.02	5140.01	.001	.02
17.45	.02	5140.01	.001	.02
17.50	.02	5140.01	.001	.02
17.55	.02	5140.01	.001	.02
17.60	.02	5140.01	.001	.02
17.65	.02	5140.01	.001	.02
17.70	.02	5140.01	.001	.02
17.75	.02	5140.01	.001	.02
17.80	.02	5140.01	.001	.02

17.85	.02	5140.01	.001	.02
17.90	.02	5140.01	.001	.02
17.95	.02	5140.01	.001	.02
18.00	.02	5140.01	.001	.02
18.05	.02	5140.01	.001	.02
18.10	.02	5140.01	.001	.02
18.15	.02	5140.01	.001	.02
18.20	.02	5140.01	.001	.02
18.25	.02	5140.01	.001	.02
18.30	.02	5140.01	.001	.02
18.35	.02	5140.01	.001	.02
18.40	.02	5140.01	.001	.02
18.45	.02	5140.01	.001	.02
18.50	.02	5140.01	.001	.02
18.55	.02	5140.01	.001	.02
18.60	.02	5140.01	.001	.02
18.65	.02	5140.01	.001	.02
18.70	.02	5140.01	.001	.02
18.75	.02	5140.01	.001	.02
18.80	.02	5140.01	.001	.02
18.85	.02	5140.01	.001	.02
18.90	.02	5140.01	.001	.02
18.95	.02	5140.01	.001	.02
19.00	.02	5140.01	.001	.02
19.05	.02	5140.01	.001	.02
19.10	.02	5140.01	.001	.02
19.15	.02	5140.01	.001	.02
19.20	.02	5140.01	.001	.02
19.25	.02	5140.01	.001	.02
19.30	.02	5140.01	.001	.02
19.35	.02	5140.01	.001	.02
19.40	.02	5140.01	.001	.02
19.45	.02	5140.01	.001	.02
19.50	.02	5140.01	.001	.02
19.55	.02	5140.01	.001	.02

TIME (HRS)	INFLOW (CFS)	ELEV (FEET)	VOLUME (AC-FT)	OUTFLOW (CFS)

19.60	.02	5140.01	.001	.02
19.65	.02	5140.01	.001	.02
19.70	.02	5140.01	.001	.02
19.75	.02	5140.01	.001	.02
19.80	.02	5140.01	.001	.02
19.85	.02	5140.01	.001	.02
19.90	.02	5140.01	.001	.02
19.95	.02	5140.01	.001	.02
20.00	.02	5140.01	.001	.02
20.05	.02	5140.01	.001	.02
20.10	.02	5140.01	.001	.02
20.15	.02	5140.01	.001	.02
20.20	.02	5140.01	.001	.02
20.25	.02	5140.01	.001	.02
20.30	.02	5140.01	.001	.02
20.35	.02	5140.01	.001	.02
20.40	.02	5140.01	.001	.02
20.45	.02	5140.01	.001	.02
20.50	.02	5140.01	.001	.02
20.55	.02	5140.01	.001	.02
20.60	.02	5140.01	.001	.02
20.65	.02	5140.01	.001	.02
20.70	.02	5140.01	.001	.02
20.75	.02	5140.01	.001	.02
20.80	.02	5140.01	.001	.02
20.85	.02	5140.01	.001	.02
20.90	.02	5140.01	.001	.02
20.95	.02	5140.01	.001	.02
21.00	.02	5140.01	.001	.02
21.05	.02	5140.01	.001	.02
21.10	.02	5140.01	.001	.02
21.15	.02	5140.01	.001	.02
21.20	.02	5140.01	.001	.02
21.25	.02	5140.01	.001	.02
21.30	.02	5140.01	.001	.02
21.35	.02	5140.01	.001	.02
21.40	.02	5140.01	.001	.02

21.45	.02	5140.01	.001	.02
21.50	.02	5140.01	.001	.02
21.55	.02	5140.01	.001	.02
21.60	.02	5140.01	.001	.02
21.65	.02	5140.01	.001	.02
21.70	.02	5140.01	.001	.02
21.75	.02	5140.01	.001	.02
21.80	.02	5140.01	.001	.02
21.85	.02	5140.01	.001	.02
21.90	.02	5140.01	.001	.02
21.95	.02	5140.01	.001	.02
22.00	.02	5140.01	.001	.02
22.05	.02	5140.01	.001	.02
22.10	.02	5140.01	.001	.02
22.15	.02	5140.01	.001	.02
22.20	.02	5140.01	.001	.02
22.25	.02	5140.01	.001	.02
22.30	.02	5140.01	.001	.02
22.35	.02	5140.01	.001	.02

TIME (HRS)	INFLOW (CFS)	ELEV (FEET)	VOLUME (AC-FT)	OUTFLOW (CFS)
22.40	.02	5140.01	.001	.02
22.45	.02	5140.01	.001	.02
22.50	.02	5140.01	.001	.02
22.55	.02	5140.01	.001	.02
22.60	.02	5140.01	.001	.02
22.65	.02	5140.01	.001	.02
22.70	.02	5140.01	.001	.02
22.75	.02	5140.01	.001	.02
22.80	.02	5140.01	.001	.02
22.85	.02	5140.01	.001	.02
22.90	.02	5140.01	.001	.02
22.95	.02	5140.01	.001	.02
23.00	.02	5140.01	.001	.02
23.05	.02	5140.01	.001	.02
23.10	.02	5140.01	.001	.02

23.15	.02	5140.01	.001	.02
23.20	.02	5140.01	.001	.02
23.25	.02	5140.01	.001	.02
23.30	.02	5140.01	.001	.02
23.35	.02	5140.01	.001	.02
23.40	.02	5140.01	.001	.02
23.45	.02	5140.01	.001	.02
23.50	.02	5140.01	.001	.02
23.55	.02	5140.01	.001	.02
23.60	.02	5140.01	.001	.02
23.65	.02	5140.01	.001	.02
23.70	.02	5140.01	.001	.02
23.75	.02	5140.01	.001	.02
23.80	.02	5140.01	.001	.02
23.85	.02	5140.01	.001	.02
23.90	.02	5140.01	.001	.02
23.95	.02	5140.01	.001	.02
24.00	.02	5140.01	.001	.02
24.05	.02	5140.01	.001	.02
24.10	.01	5140.01	.001	.02
24.15	.01	5140.01	.001	.02
24.20	.00	5140.01	.001	.02
24.25	.00	5140.01	.001	.02
24.30	.00	5140.01	.001	.01
24.35	.00	5140.01	.001	.01
24.40	.00	5140.01	.001	.01
24.45	.00	5140.01	.001	.01
24.50	.00	5140.01	.001	.01
24.55	.00	5140.01	.001	.01
24.60	.00	5140.00	.001	.01
24.65	.00	5140.00	.001	.01
24.70	.00	5140.00	.001	.01
24.75	.00	5140.00	.000	.01
24.80	.00	5140.00	.000	.01
24.85	.00	5140.00	.000	.01
24.90	.00	5140.00	.000	.01
24.95	.00	5140.00	.000	.01
25.00	.00	5140.00	.000	.01

```
   25.05        .00   5140.00       .000       .01
   25.10        .00   5140.00       .000       .00
 PEAK DISCHARGE =        4.423 CFS - PEAK OCCURS AT HOUR    1.70
 MAXIMUM WATER SURFACE ELEVATION =     5143.274
 MAXIMUM STORAGE =         .1437 AC-FT      INCREMENTAL TIME=     .050000HRS

*
*
PRINT HYD                    ID=4 CODE=0
```

HYDROGRAPH FROM AREA comb

TIME HRS	FLOW CFS	TIME HRS	FLOW CFS	TIME HRS	FLOW CFS	TIME HRS	FLOW CFS
.000	.0	5.300	.1	10.600	.0	15.900	.0
.050	.0	5.350	.1	10.650	.0	15.950	.0
.100	.0	5.400	.1	10.700	.0	16.000	.0
.150	.0	5.450	.1	10.750	.0	16.050	.0
.200	.0	5.500	.1	10.800	.0	16.100	.0
.250	.0	5.550	.1	10.850	.0	16.150	.0
.300	.0	5.600	.1	10.900	.0	16.200	.0
.350	.0	5.650	.1	10.950	.0	16.250	.0
.400	.0	5.700	.1	11.000	.0	16.300	.0
.450	.0	5.750	.1	11.050	.0	16.350	.0
.500	.0	5.800	.1	11.100	.0	16.400	.0

	.550	.0	5.850	.1	11.150	.0	16.450	.0
21.750	.0							
	.600	.0	5.900	.1	11.200	.0	16.500	.0
21.800	.0							
	.650	.0	5.950	.0	11.250	.0	16.550	.0
21.850	.0							
	.700	.0	6.000	.0	11.300	.0	16.600	.0
21.900	.0							
	.750	.0	6.050	.0	11.350	.0	16.650	.0
21.950	.0							
	.800	.0	6.100	.0	11.400	.0	16.700	.0
22.000	.0							
	.850	.0	6.150	.0	11.450	.0	16.750	.0
22.050	.0							
	.900	.0	6.200	.0	11.500	.0	16.800	.0
22.100	.0							
	.950	.0	6.250	.0	11.550	.0	16.850	.0
22.150	.0							
	1.000	.0	6.300	.0	11.600	.0	16.900	.0
22.200	.0							
	1.050	.0	6.350	.0	11.650	.0	16.950	.0
22.250	.0							
	1.100	.0	6.400	.0	11.700	.0	17.000	.0
22.300	.0							
	1.150	.0	6.450	.0	11.750	.0	17.050	.0
22.350	.0							
	1.200	.0	6.500	.0	11.800	.0	17.100	.0
22.400	.0							
	1.250	.0	6.550	.0	11.850	.0	17.150	.0
22.450	.0							
	1.300	.1	6.600	.0	11.900	.0	17.200	.0
22.500	.0							
	1.350	.2	6.650	.0	11.950	.0	17.250	.0
22.550	.0							
	1.400	.4	6.700	.0	12.000	.0	17.300	.0
22.600	.0							
	1.450	.8	6.750	.0	12.050	.0	17.350	.0
22.650	.0							

	1.500	1.2	6.800	.0	12.100	.0	17.400	.0
22.700	.0							
	1.550	1.7	6.850	.0	12.150	.0	17.450	.0
22.750	.0							
	1.600	2.1	6.900	.0	12.200	.0	17.500	.0
22.800	.0							
	1.650	4.2	6.950	.0	12.250	.0	17.550	.0
22.850	.0							
	1.700	4.4	7.000	.0	12.300	.0	17.600	.0
22.900	.0							
	1.750	4.3	7.050	.0	12.350	.0	17.650	.0
22.950	.0							
	1.800	4.0	7.100	.0	12.400	.0	17.700	.0
23.000	.0							
	1.850	3.6	7.150	.0	12.450	.0	17.750	.0
23.050	.0							
	1.900	3.1	7.200	.0	12.500	.0	17.800	.0
23.100	.0							
	1.950	2.3	7.250	.0	12.550	.0	17.850	.0
23.150	.0							
	2.000	1.9	7.300	.0	12.600	.0	17.900	.0
23.200	.0							
	2.050	1.7	7.350	.0	12.650	.0	17.950	.0
23.250	.0							
	2.100	1.7	7.400	.0	12.700	.0	18.000	.0
23.300	.0							
	2.150	2.0	7.450	.0	12.750	.0	18.050	.0
23.350	.0							
	2.200	1.9	7.500	.0	12.800	.0	18.100	.0
23.400	.0							
	2.250	1.8	7.550	.0	12.850	.0	18.150	.0
23.450	.0							
	2.300	1.8	7.600	.0	12.900	.0	18.200	.0
23.500	.0							
	2.350	1.7	7.650	.0	12.950	.0	18.250	.0
23.550	.0							
	2.400	1.6	7.700	.0	13.000	.0	18.300	.0
23.600	.0							

	2.450	1.5	7.750	.0	13.050	.0	18.350	.0
23.650	.0							
	2.500	1.4	7.800	.0	13.100	.0	18.400	.0
23.700	.0							
	2.550	1.4	7.850	.0	13.150	.0	18.450	.0
23.750	.0							
	2.600	1.3	7.900	.0	13.200	.0	18.500	.0
23.800	.0							
	2.650	1.2	7.950	.0	13.250	.0	18.550	.0
23.850	.0							
	2.700	1.2	8.000	.0	13.300	.0	18.600	.0
23.900	.0							
	2.750	1.1	8.050	.0	13.350	.0	18.650	.0
23.950	.0							
	2.800	1.0	8.100	.0	13.400	.0	18.700	.0
24.000	.0							
	2.850	1.0	8.150	.0	13.450	.0	18.750	.0
24.050	.0							
	2.900	.9	8.200	.0	13.500	.0	18.800	.0
24.100	.0							
	2.950	.9	8.250	.0	13.550	.0	18.850	.0
24.150	.0							
	3.000	.8	8.300	.0	13.600	.0	18.900	.0
24.200	.0							
	3.050	.8	8.350	.0	13.650	.0	18.950	.0
24.250	.0							
	3.100	.7	8.400	.0	13.700	.0	19.000	.0
24.300	.0							
	3.150	.7	8.450	.0	13.750	.0	19.050	.0
24.350	.0							
	3.200	.7	8.500	.0	13.800	.0	19.100	.0
24.400	.0							
	3.250	.6	8.550	.0	13.850	.0	19.150	.0
24.450	.0							
	3.300	.6	8.600	.0	13.900	.0	19.200	.0
24.500	.0							
	3.350	.5	8.650	.0	13.950	.0	19.250	.0
24.550	.0							

	3.400	.5	8.700	.0	14.000	.0	19.300	.0
24.600	.0							
	3.450	.5	8.750	.0	14.050	.0	19.350	.0
24.650	.0							
	3.500	.5	8.800	.0	14.100	.0	19.400	.0
24.700	.0							
	3.550	.4	8.850	.0	14.150	.0	19.450	.0
24.750	.0							
	3.600	.4	8.900	.0	14.200	.0	19.500	.0
24.800	.0							
	3.650	.4	8.950	.0	14.250	.0	19.550	.0
24.850	.0							
	3.700	.4	9.000	.0	14.300	.0	19.600	.0
24.900	.0							
	3.750	.3	9.050	.0	14.350	.0	19.650	.0
24.950	.0							
	3.800	.3	9.100	.0	14.400	.0	19.700	.0
25.000	.0							
	3.850	.3	9.150	.0	14.450	.0	19.750	.0
25.050	.0							
	3.900	.3	9.200	.0	14.500	.0	19.800	.0
25.100	.0							
	3.950	.3	9.250	.0	14.550	.0	19.850	.0
25.150	.0							
	4.000	.3	9.300	.0	14.600	.0	19.900	.0
25.200	.0							
	4.050	.2	9.350	.0	14.650	.0	19.950	.0
25.250	.0							
	4.100	.2	9.400	.0	14.700	.0	20.000	.0
25.300	.0							
	4.150	.2	9.450	.0	14.750	.0	20.050	.0
25.350	.0							
	4.200	.2	9.500	.0	14.800	.0	20.100	.0
25.400	.0							
	4.250	.2	9.550	.0	14.850	.0	20.150	.0
25.450	.0							
	4.300	.2	9.600	.0	14.900	.0	20.200	.0
25.500	.0							

	4.350	.2	9.650	.0	14.950	.0	20.250	.0
25.550	.0							
	4.400	.2	9.700	.0	15.000	.0	20.300	.0
25.600	.0							
	4.450	.2	9.750	.0	15.050	.0	20.350	.0
25.650	.0							
	4.500	.1	9.800	.0	15.100	.0	20.400	.0
25.700	.0							
	4.550	.1	9.850	.0	15.150	.0	20.450	.0
25.750	.0							
	4.600	.1	9.900	.0	15.200	.0	20.500	.0
25.800	.0							
	4.650	.1	9.950	.0	15.250	.0	20.550	.0
25.850	.0							
	4.700	.1	10.000	.0	15.300	.0	20.600	.0
25.900	.0							
	4.750	.1	10.050	.0	15.350	.0	20.650	.0
25.950	.0							
	4.800	.1	10.100	.0	15.400	.0	20.700	.0
26.000	.0							
	4.850	.1	10.150	.0	15.450	.0	20.750	.0
26.050	.0							
	4.900	.1	10.200	.0	15.500	.0	20.800	.0
26.100	.0							
	4.950	.1	10.250	.0	15.550	.0	20.850	.0
26.150	.0							
	5.000	.1	10.300	.0	15.600	.0	20.900	.0
26.200	.0							
	5.050	.1	10.350	.0	15.650	.0	20.950	.0
26.250	.0							
	5.100	.1	10.400	.0	15.700	.0	21.000	.0
	5.150	.1	10.450	.0	15.750	.0	21.050	.0
	5.200	.1	10.500	.0	15.800	.0	21.100	.0
	5.250	.1	10.550	.0	15.850	.0	21.150	.0

RUNOFF VOLUME = 1.10508 INCHES = .3536 ACRE-FEET
PEAK DISCHARGE RATE = 4.42 CFS AT 1.700 HOURS BASIN AREA = .0060 SQ. MI.

```
*
*
*Now Calculate Peak rate from northern 2.09 acres
*
*S**** COMPUTE BASIN-
COMPUTE NM HYD       ID=5 HYD NO=North DA=0.0033
                     PER A=0 PER B=15 PER C=0 PER D=85
                                   TP=0.133 RAIN=-1

     K =   .072485HR    TP =   .133000HR    K/TP RATIO =   .545000     SHAPE CONSTANT, N =
7.106420
     UNIT PEAK =   11.099    CFS   UNIT VOLUME =    .9981       B =   526.28      P60 = 2.0100
     AREA =      .002805 SQ MI    IA =    .10000 INCHES    INF =    .04000 INCHES PER HOUR
     RUNOFF COMPUTED BY INITIAL ABSTRACTION/INFILTRATION NUMBER METHOD - DT =   .050000


     K =   .131790HR    TP =   .133000HR    K/TP RATIO =   .990905     SHAPE CONSTANT, N =
3.563124
     UNIT PEAK =   1.2092    CFS   UNIT VOLUME =    .9897       B =   324.91      P60 = 2.0100
     AREA =      .000495 SQ MI    IA =    .50000 INCHES    INF =   1.25000 INCHES PER HOUR
     RUNOFF COMPUTED BY INITIAL ABSTRACTION/INFILTRATION NUMBER METHOD - DT =   .050000

PRINT HYD            ID=5 CODE=1

                                   HYDROGRAPH FROM AREA North


    RUNOFF VOLUME =     2.25624 INCHES     =        .3971 ACRE-FEET
    PEAK DISCHARGE RATE =       9.04 CFS  AT   1.500 HOURS   BASIN AREA =   .0033 SQ. MI.


*

PRINT HYD            ID=5
```

HYDROGRAPH FROM AREA North

TIME HRS	FLOW CFS	TIME HRS	FLOW CFS	TIME HRS	FLOW CFS	TIME HRS	FLOW CFS
.000	.0	4.950	.1	9.900	.0	14.850	.0
.050	.0	5.000	.1	9.950	.0	14.900	.0
.100	.0	5.050	.1	10.000	.0	14.950	.0
.150	.0	5.100	.1	10.050	.0	15.000	.0
.200	.0	5.150	.1	10.100	.0	15.050	.0
.250	.0	5.200	.1	10.150	.0	15.100	.0
.300	.0	5.250	.1	10.200	.0	15.150	.0
.350	.0	5.300	.1	10.250	.0	15.200	.0
.400	.0	5.350	.1	10.300	.0	15.250	.0
.450	.0	5.400	.1	10.350	.0	15.300	.0
.500	.0	5.450	.1	10.400	.0	15.350	.0
.550	.0	5.500	.1	10.450	.0	15.400	.0
.600	.0	5.550	.1	10.500	.0	15.450	.0
.650	.0	5.600	.1	10.550	.0	15.500	.0
.700	.0	5.650	.1	10.600	.0	15.550	.0
.750	.0	5.700	.1	10.650	.0	15.600	.0

.800	.0	5.750	.1	10.700	.0	15.650	.0	20.600
.0								
.850	.0	5.800	.1	10.750	.0	15.700	.0	20.650
.0								
.900	.0	5.850	.1	10.800	.0	15.750	.0	20.700
.0								
.950	.0	5.900	.1	10.850	.0	15.800	.0	20.750
.0								
1.000	.0	5.950	.1	10.900	.0	15.850	.0	20.800
.0								
1.050	.0	6.000	.1	10.950	.0	15.900	.0	20.850
.0								
1.100	.0	6.050	.1	11.000	.0	15.950	.0	20.900
.0								
1.150	.0	6.100	.1	11.050	.0	16.000	.0	20.950
.0								
1.200	.2	6.150	.1	11.100	.0	16.050	.0	21.000
.0								
1.250	.9	6.200	.1	11.150	.0	16.100	.0	21.050
.0								
1.300	2.0	6.250	.1	11.200	.0	16.150	.0	21.100
.0								
1.350	3.5	6.300	.1	11.250	.0	16.200	.0	21.150
.0								
1.400	5.6	6.350	.1	11.300	.0	16.250	.0	21.200
.0								
1.450	8.0	6.400	.1	11.350	.0	16.300	.0	21.250
.0								
1.500	9.0	6.450	.1	11.400	.0	16.350	.0	21.300
.0								
1.550	7.9	6.500	.1	11.450	.0	16.400	.0	21.350
.0								
1.600	6.1	6.550	.1	11.500	.0	16.450	.0	21.400
.0								
1.650	4.9	6.600	.1	11.550	.0	16.500	.0	21.450
.0								
1.700	4.1	6.650	.1	11.600	.0	16.550	.0	21.500
.0								

1.750	3.5	6.700	.1	11.650	.0	16.600	.0	21.550
.0								
1.800	3.2	6.750	.1	11.700	.0	16.650	.0	21.600
.0								
1.850	2.8	6.800	.1	11.750	.0	16.700	.0	21.650
.0								
1.900	2.6	6.850	.1	11.800	.0	16.750	.0	21.700
.0								
1.950	2.3	6.900	.1	11.850	.0	16.800	.0	21.750
.0								
2.000	2.1	6.950	.1	11.900	.0	16.850	.0	21.800
.0								
2.050	1.9	7.000	.1	11.950	.0	16.900	.0	21.850
.0								
2.100	1.5	7.050	.1	12.000	.0	16.950	.0	21.900
.0								
2.150	1.0	7.100	.1	12.050	.0	17.000	.0	21.950
.0								
2.200	.8	7.150	.1	12.100	.0	17.050	.0	22.000
.0								
2.250	.6	7.200	.1	12.150	.0	17.100	.0	22.050
.0								
2.300	.5	7.250	.1	12.200	.0	17.150	.0	22.100
.0								
2.350	.4	7.300	.1	12.250	.0	17.200	.0	22.150
.0								
2.400	.4	7.350	.1	12.300	.0	17.250	.0	22.200
.0								
2.450	.3	7.400	.1	12.350	.0	17.300	.0	22.250
.0								
2.500	.3	7.450	.1	12.400	.0	17.350	.0	22.300
.0								
2.550	.2	7.500	.1	12.450	.0	17.400	.0	22.350
.0								
2.600	.2	7.550	.1	12.500	.0	17.450	.0	22.400
.0								
2.650	.2	7.600	.1	12.550	.0	17.500	.0	22.450
.0								

	2.700	.2	7.650	.1	12.600	.0	17.550	.0
22.500	.0							
	2.750	.2	7.700	.1	12.650	.0	17.600	.0
22.550	.0							
	2.800	.1	7.750	.1	12.700	.0	17.650	.0
22.600	.0							
	2.850	.1	7.800	.1	12.750	.0	17.700	.0
22.650	.0							
	2.900	.1	7.850	.1	12.800	.0	17.750	.0
22.700	.0							
	2.950	.1	7.900	.1	12.850	.0	17.800	.0
22.750	.0							
	3.000	.1	7.950	.1	12.900	.0	17.850	.0
22.800	.0							
	3.050	.1	8.000	.1	12.950	.0	17.900	.0
22.850	.0							
	3.100	.1	8.050	.1	13.000	.0	17.950	.0
22.900	.0							
	3.150	.1	8.100	.1	13.050	.0	18.000	.0
22.950	.0							
	3.200	.1	8.150	.1	13.100	.0	18.050	.0
23.000	.0							
	3.250	.1	8.200	.1	13.150	.0	18.100	.0
23.050	.0							
	3.300	.1	8.250	.1	13.200	.0	18.150	.0
23.100	.0							
	3.350	.1	8.300	.1	13.250	.0	18.200	.0
23.150	.0							
	3.400	.1	8.350	.1	13.300	.0	18.250	.0
23.200	.0							
	3.450	.1	8.400	.1	13.350	.0	18.300	.0
23.250	.0							
	3.500	.1	8.450	.1	13.400	.0	18.350	.0
23.300	.0							
	3.550	.1	8.500	.1	13.450	.0	18.400	.0
23.350	.0							
	3.600	.1	8.550	.1	13.500	.0	18.450	.0
23.400	.0							

	3.650	.1	8.600	.1	13.550	.0	18.500	.0
23.450	.0							
	3.700	.1	8.650	.1	13.600	.0	18.550	.0
23.500	.0							
	3.750	.1	8.700	.1	13.650	.0	18.600	.0
23.550	.0							
	3.800	.1	8.750	.1	13.700	.0	18.650	.0
23.600	.0							
	3.850	.1	8.800	.1	13.750	.0	18.700	.0
23.650	.0							
	3.900	.1	8.850	.1	13.800	.0	18.750	.0
23.700	.0							
	3.950	.1	8.900	.1	13.850	.0	18.800	.0
23.750	.0							
	4.000	.1	8.950	.1	13.900	.0	18.850	.0
23.800	.0							
	4.050	.1	9.000	.1	13.950	.0	18.900	.0
23.850	.0							
	4.100	.1	9.050	.1	14.000	.0	18.950	.0
23.900	.0							
	4.150	.1	9.100	.1	14.050	.0	19.000	.0
23.950	.0							
	4.200	.0	9.150	.1	14.100	.0	19.050	.0
24.000	.0							
	4.250	.0	9.200	.1	14.150	.0	19.100	.0
24.050	.0							
	4.300	.0	9.250	.1	14.200	.0	19.150	.0
24.100	.0							
	4.350	.0	9.300	.1	14.250	.0	19.200	.0
24.150	.0							
	4.400	.0	9.350	.1	14.300	.0	19.250	.0
24.200	.0							
	4.450	.0	9.400	.1	14.350	.0	19.300	.0
24.250	.0							
	4.500	.0	9.450	.1	14.400	.0	19.350	.0
24.300	.0							
	4.550	.0	9.500	.1	14.450	.0	19.400	.0
24.350	.0							

```
          4.600        .0          9.550        .1          14.500        .0          19.450        .0
24.400        .0
          4.650        .0          9.600        .0          14.550        .0          19.500        .0
24.450        .0
          4.700        .0          9.650        .0          14.600        .0          19.550        .0
24.500        .0
          4.750        .0          9.700        .0          14.650        .0          19.600        .0
24.550        .0
          4.800        .0          9.750        .0          14.700        .0          19.650        .0
          4.850        .1          9.800        .0          14.750        .0          19.700        .0
          4.900        .1          9.850        .0          14.800        .0          19.750        .0

        RUNOFF VOLUME =     2.25624 INCHES     =        .3971 ACRE-FEET
        PEAK DISCHARGE RATE =       9.04 CFS  AT   1.500 HOURS   BASIN AREA =   .0033 SQ. MI.


     *
     *
     *
     ADD HYD              ID=6 HYD=Sub1_up ID I=4 ID II=5
     PRINT HYD            ID=6 CODE=1

                                          HYDROGRAPH FROM AREA Sub1_up


        RUNOFF VOLUME =     1.51340 INCHES     =        .7506 ACRE-FEET
        PEAK DISCHARGE RATE =      10.27 CFS  AT   1.500 HOURS   BASIN AREA =   .0093 SQ. MI.


     *
     *

     FINISH

        NORMAL PROGRAM FINISH          END TIME (HR:MIN:SEC) = 08:50:46
```

Drainage Report

for

THUNDERBIRD HARLEY-DAVIDSON

5000 Alameda Blvd., NE

Albuquerque, NM 87113

October 6, 2011

Prepared by

Easterling Consultants LLC

3613 NM Hwy 528 NW

Suite E-2

Albuquerque, NM 87114

This report was prepared by me or under my direction. I am a registered Professional Engineer in the State of New Mexico and the information provided herein is true and accurate to the best of my knowledge and belief.

Charles M. Easterling P.E. #6411

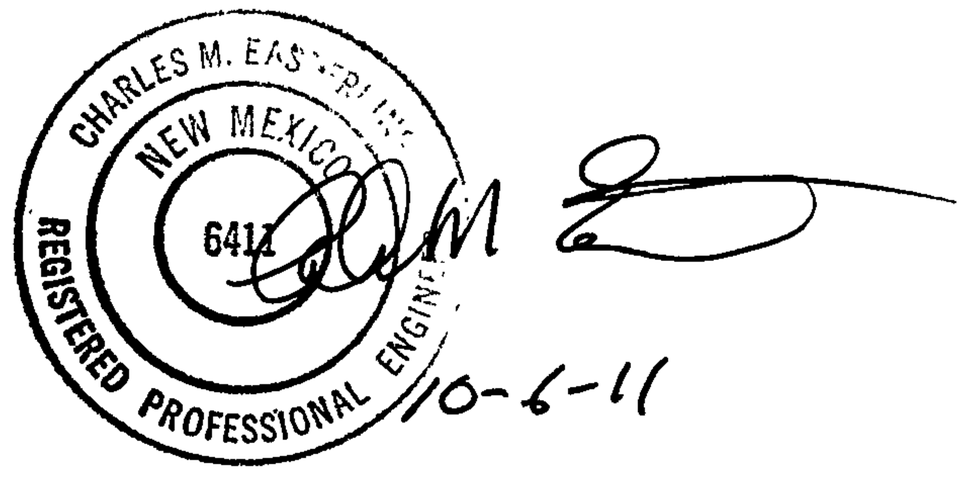

Thunderbird Harley-Davidson at 5000 Alameda Blvd. NE
Parking Lot Improvement Drainage Plan

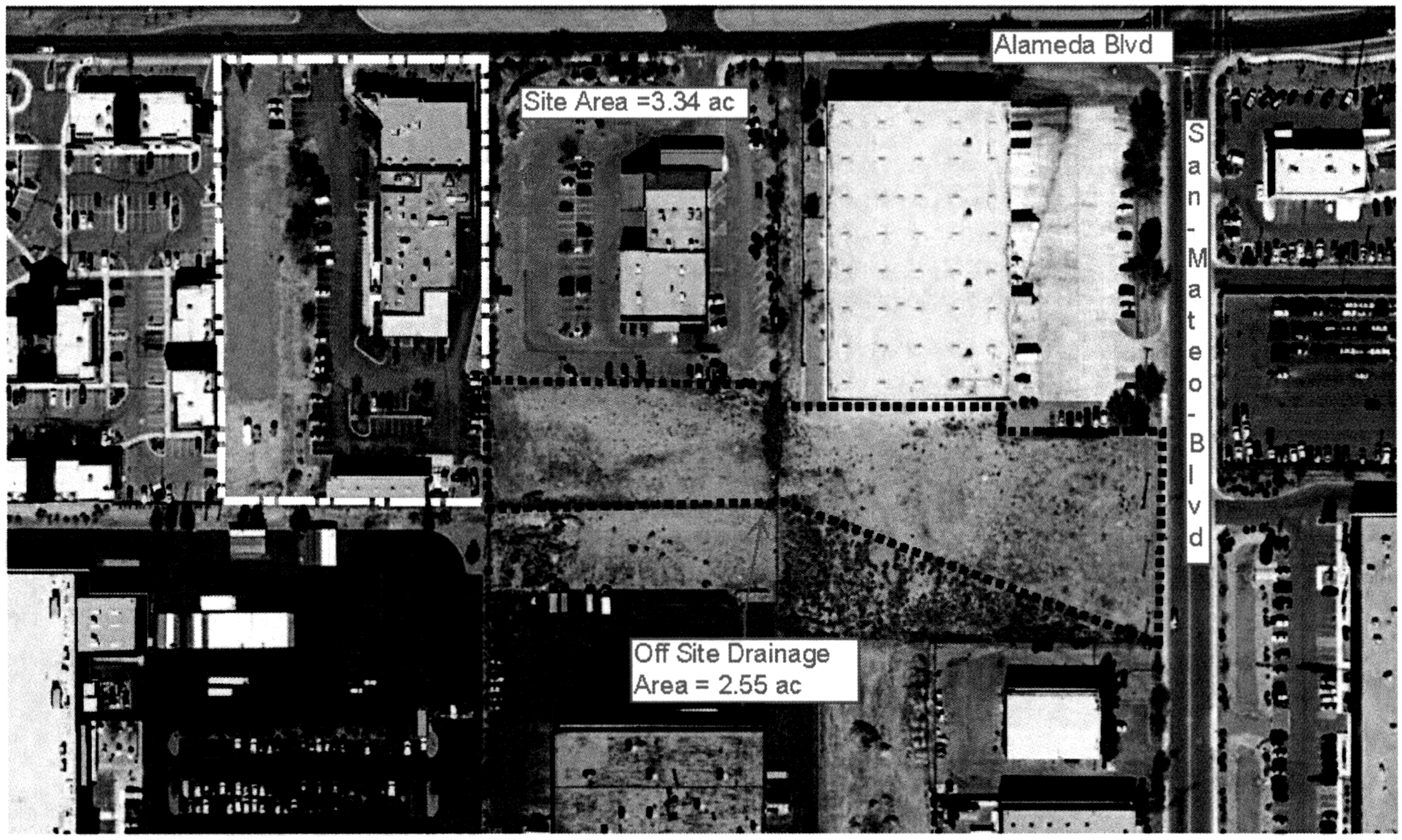

Hydrology

P_{100}-60 = 2.01 in

P_{100} - 360 = 2.35 in

P_{100} – 1440 = 2.75 in

Off Site Drainage Area = 2.55 acres Undeveloped, Natural Conditions

Treatment Type A

From AHYMO (model output attached)

Q_{100}= 3.54 cfs

V_{100}= .1130 ac-ft (4,922 ft^3)

Site Drainage Area = 3.34 acres (Old Tract F-1 @ 0.736 ac + Old Tract F-2 @ 2.604 ac)

Proposed Development- the existing Thunderbird Harley-Davidson store is located on former Tracts F-1 and F-2 of the Clifford Industrial Park. The site is fully developed, but the western tract (F-1) is currently used as a gravel parking lot and storage area. The proposal is to remodel the parking lot on both Tracts F-1 and F-2 and provide asphalt paving of the gravel portion of Tract F-1. The existing pond will be filled and a new pond constructed in the southwest corner of the site.

Background - From 1995 Isaacson & Arfman Original Drainage Report for Chic's Harley-Davidson (Old Tract F-2) and SAD 201 Storm Drain Design Report, the allowable discharge to the Alameda storm drain system in the 100 year storm was 10.3 cfs for Tract F-2 plus offsites. Since 1995, Tract F-1 was added to the site. Tract F-1 was allowed 0.93 cfs discharge to the west under undeveloped conditions as described in the drainage report for the adjacent site.

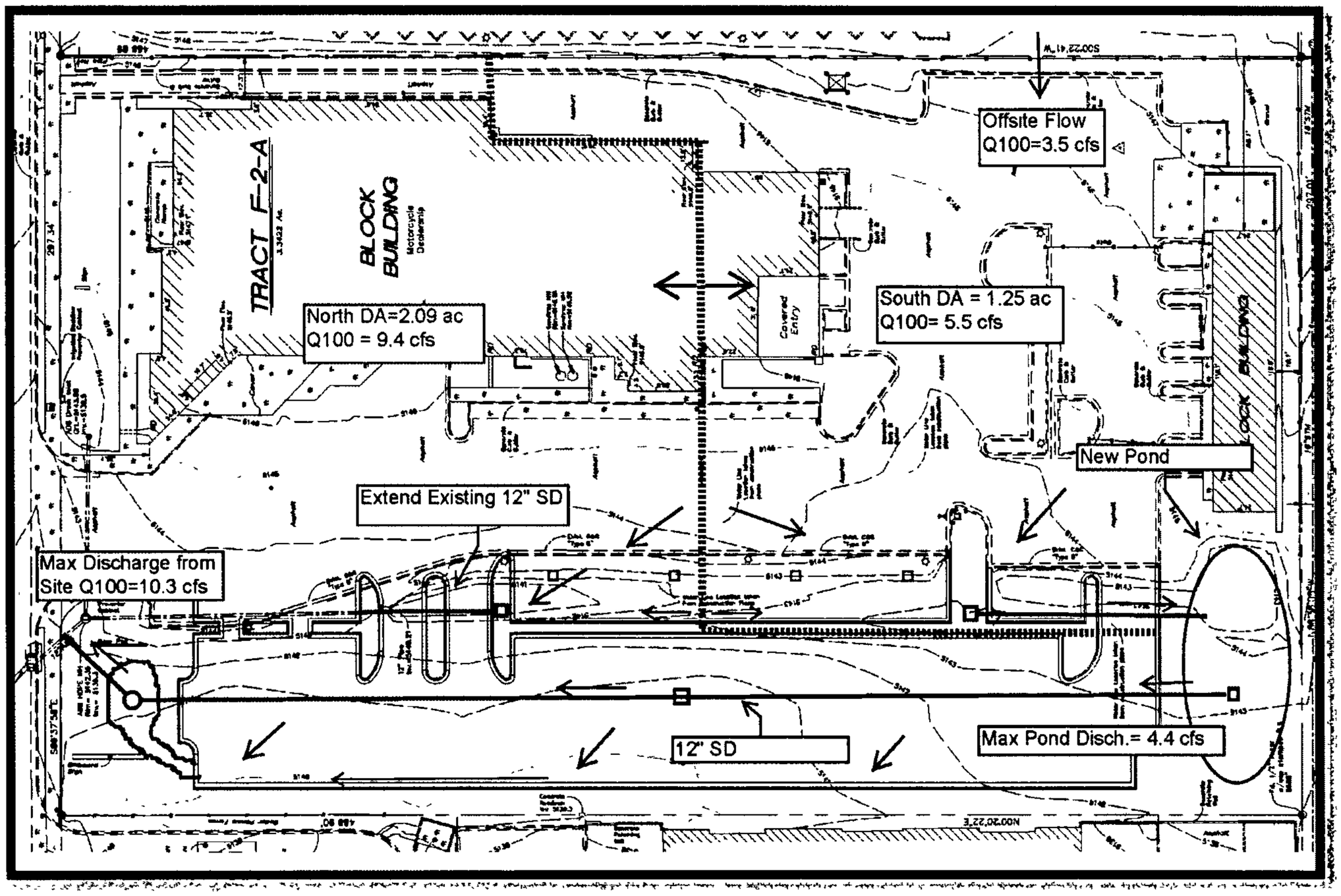

Proposed Drainage Treatment - The proposed drainage scheme is configured to continue to limit the total discharge to Alameda Blvd. to 10.3 cfs by on site ponding and controlled release via the existing 12" connection to the back of inlet in Alameda adjacent to the site. The offsite runoff (2.55 acres) and 37.5% of former Tract F-2 (1.25 ac) will be directed to a new pond constructed on the southern end of old Tract F-1. The pond will drain via a 12" storm drain to the existing collection system which currently drains into the back of an inlet in Alameda Blvd. The runoff from the building and paved parking lots will be collected via inlets in landscape areas and discharged to Alameda as is accomplished under existing conditions. The resultant maximum 100 yr runoff from the site will not exceed 10.3 cfs including both the pond discharge and the runoff from the northern portion of the site. (see Attached AHYMO summary). Where ever possible, parking lot runoff will directed to a pond or landscape area to settle sediment and the grated inlets should provide good protection from floatables reaching the Alameda storm drain system. The only runoff flowing to the west will be from the landscaped slope west of the parking lot (0.08 ac, and < 0.4 cfs) which is much less than the 0.93 cfs allowed in the previously approved drainage plans.

NOTE.
TRASH RACK COMPONENTS SHALL BE JOINED WITH CONTINUOUS FILLET WELDS GRIND OFF ALL BURRS AND SHARP EDGES. THE FINISHED ASSEMBLY SHALL BE SHOP PRIMED AND PAINTED WITH TWO COATS OF ALUMINUM PAINT (AASHTO M-69).

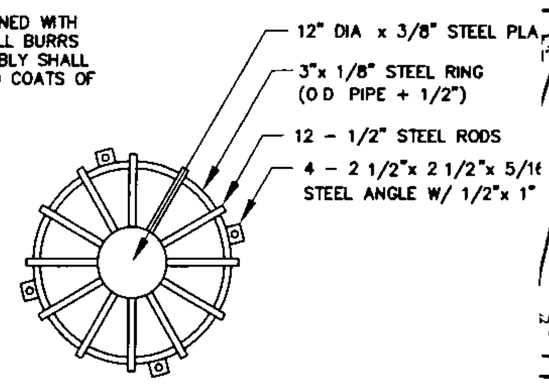

TRASH RACK - PLAN VIEW
NOT TO SCALE

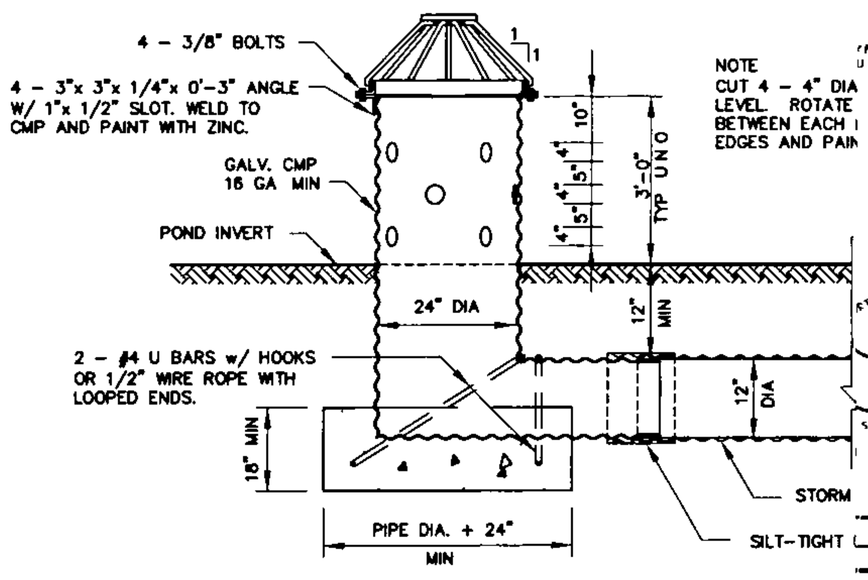

CMP INLET STRUCTURE
NOT TO SCALE

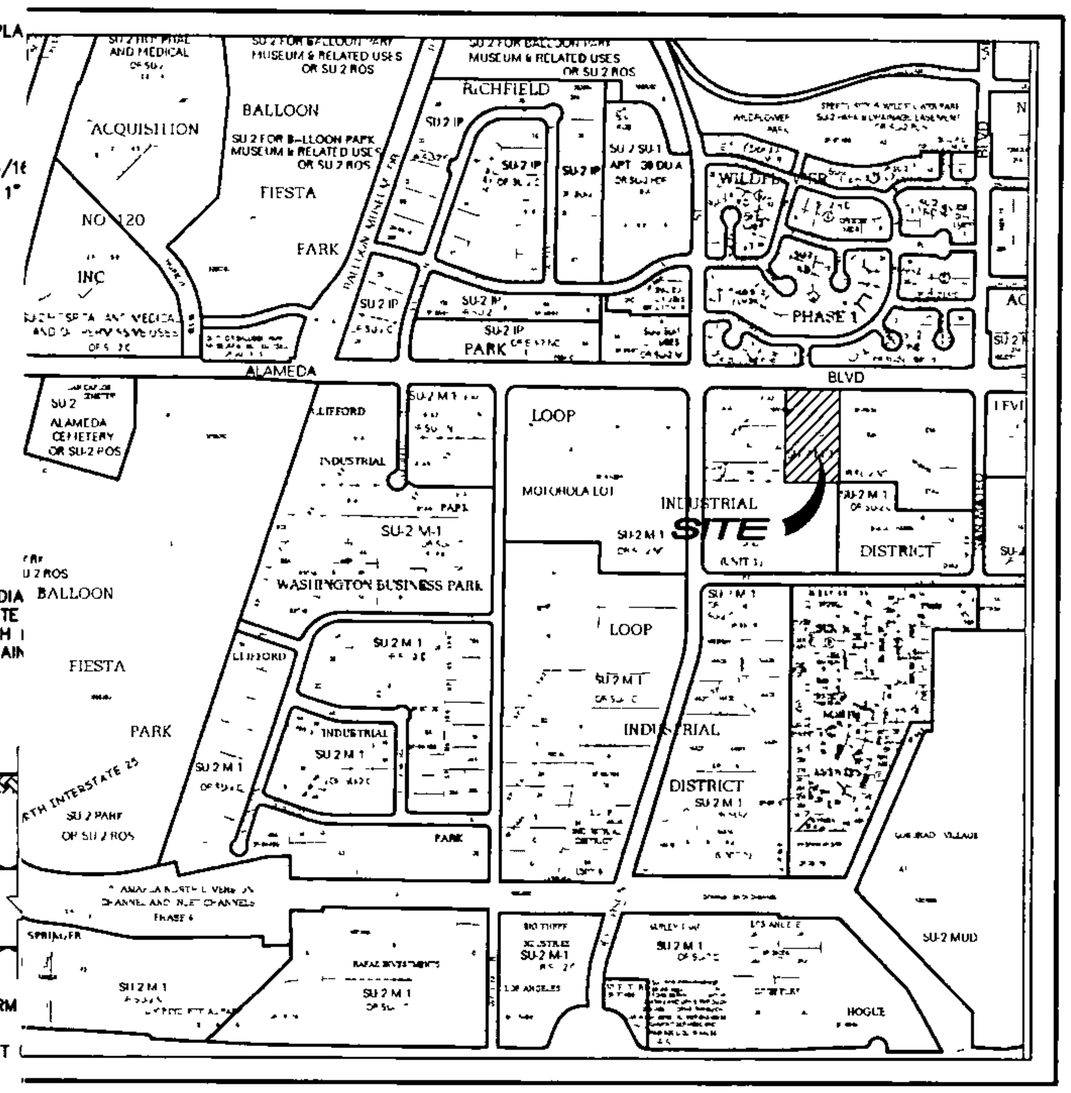

VICINITY MAP
Not To Scale
(C-17-Z)

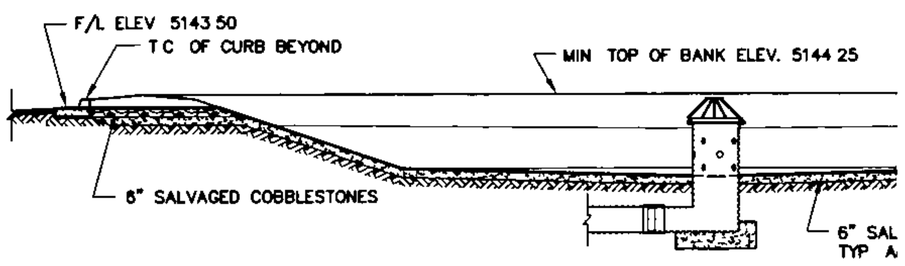

SECTION ACROSS SOUTH PO
NOT TO SC

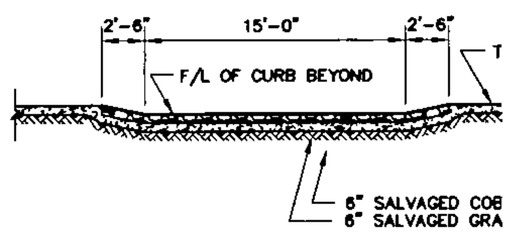

SECTION ACROSS SOUTH POND SF
1/8"

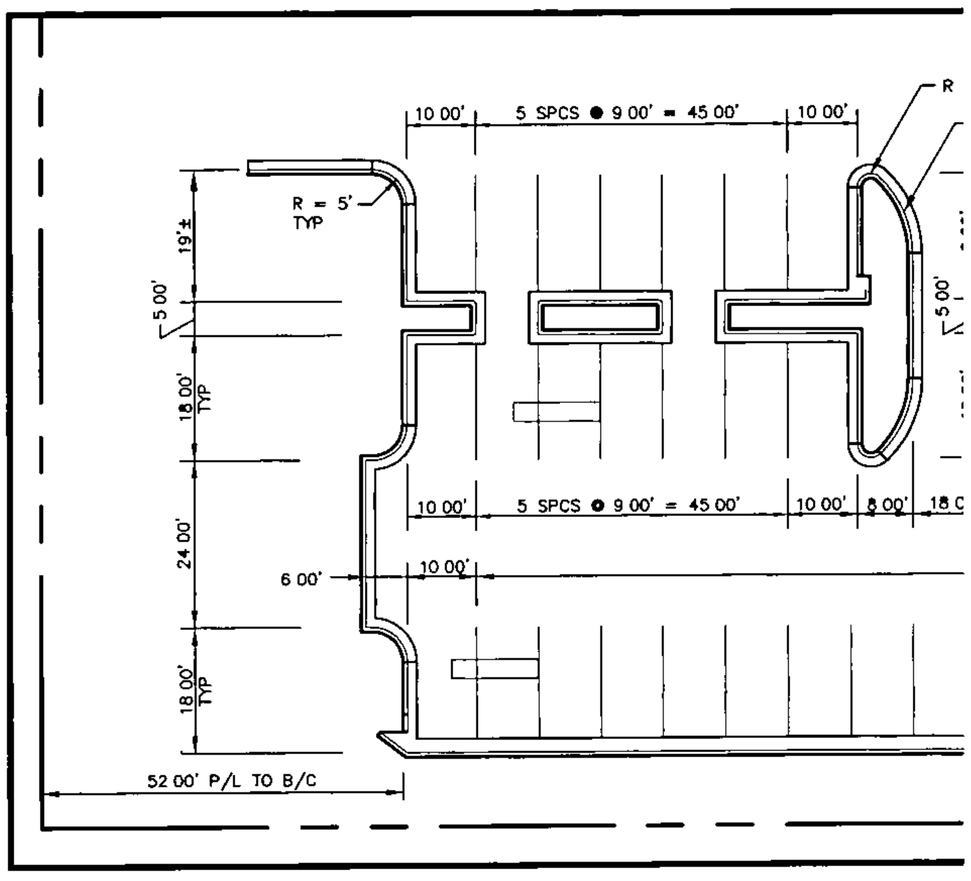

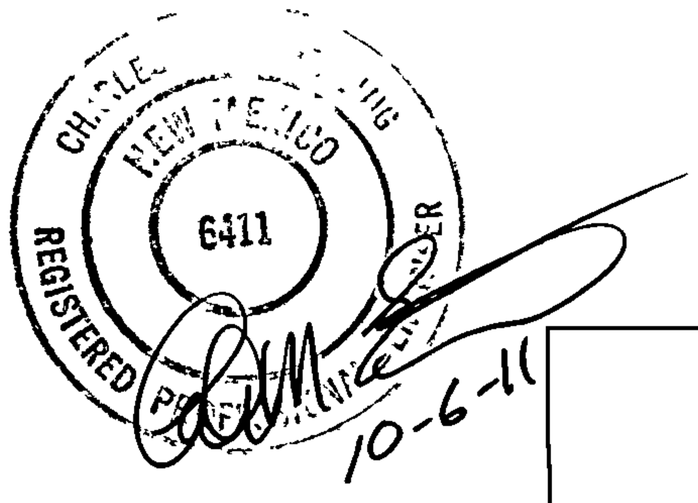

ALBUQUERQUE, NEW MEXICO

THUNDERBIRD HARLEY-DAVIDSON
PARKING LOT EXPANSION
LAYOUT, NOTES, & DETAILS

© COPYRIGHT

Sheet 1 of 2

D:\Land Projects,2005\Harley - Tbird\dwg\DETAILS.dwg 10/2/2011 6:46:33 PM MDT

D:\Land Projects 2005\Harley - Third\dwg\SITE PLAN.dwg 10/2/2011 6:45:29 PM MDT

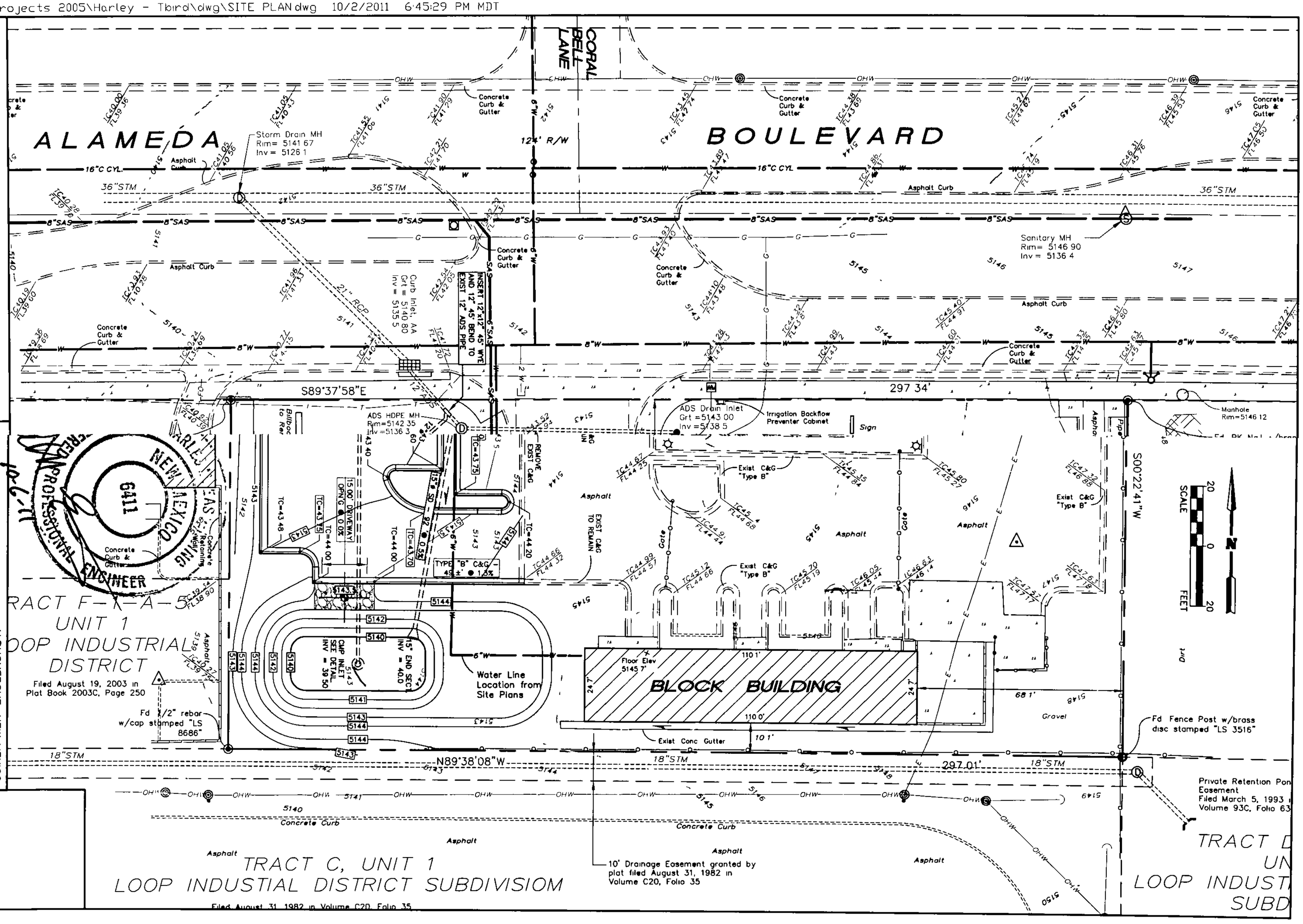

THUNDERBIRD HARLEY-DAVIDSON
PARKING LOT EXPANSION
SITE PLAN

ALBUQUERQUE, NEW MEXICO

Sheet 2 of 2

© COPYRIGHT

— Pre AHYMO Summary —

```
        AHYMO PROGRAM (AHYMO_97) -                                  -
Version:  1997.02c
             RUN DATE (MON/DAY/YR) = 09/20/2011
             START TIME (HR:MIN:SEC) = 08:50:46     USER NO.=
AHYMO-C-9803c01UNMLIB-AH
             INPUT FILE = tbird v2.hym

     *S*                    PROJECT NAME:  Thunderbird Harley
     *S*                    JOB NO. - 56-07-04
     *S*                    DATE: Aug 29 2011
     *S*
     *S*                    INPUT FILE NAME: thunderbird.hym
     *S*                    OUTPUT FILE NAME: Thunderbird.out
     *S*                    FILES LOCATION: 56-11-04 Thunderbird
Harley\Eng\AHYMO
     *S*
     *S*                          Thunderbird Harley Davidson
     *S*
     *S*
     *S*
     *S*
     *S*
     *S*
     *S*

*************************************************************************
**************

     *s*
     ***************************************************
     *                    100 year storm event
     RAINFALL              TYPE=2  RAIN QUARTER=0.0  RAIN ONE=2.01
                           RAIN SIX=2.35   RAIN DAY=2.75   DT=.05

                    COMPUTED 24-HOUR RAINFALL DISTRIBUTION BASED
ON NOAA ATLAS 2 - PEAK AT 1.40 HR.
                    DT =    .050000 HOURS       END TIME =
24.000000 HOURS
                     .0000   .0024   .0049   .0075   .0102
.0130   .0158
                     .0188   .0219   .0252   .0286   .0321
.0358   .0397
                     .0439   .0482   .0529   .0578   .0631
.0689   .0751
                     .0836   .0930   .1201   .1842   .2944
.4649   .7103
                    1.0460  1.3107  1.4303  1.5302  1.6176
1.6959  1.7667
                    1.8313  1.8906  1.9452  1.9955  2.0421
2.0851  2.0946
                    2.1034  2.1115  2.1191  2.1262  2.1330
```

2.1394	2.1455
2.1771	2.1817
2.2067	2.2105
2.2315	2.2347
2.2529	2.2557
2.2719	2.2744
2.2889	2.2913
2.3046	2.3067
2.3190	2.3209
2.3323	2.3342
2.3449	2.3466
2.3569	2.3586
2.3686	2.3703
2.3801	2.3817
2.3913	2.3929
2.4022	2.4038
2.4129	2.4144
2.4234	2.4248
2.4336	2.4350
2.4436	2.4450
2.4534	2.4548
2.4630	2.4644
2.4725	2.4738
2.4817	2.4830
2.4908	2.4921
2.4997	2.5010

2.1513	2.1569	2.1622	2.1673	2.1723
2.1862	2.1905	2.1948	2.1989	2.2028
2.2142	2.2178	2.2213	2.2248	2.2282
2.2379	2.2410	2.2440	2.2470	2.2500
2.2585	2.2613	2.2640	2.2666	2.2693
2.2769	2.2794	2.2818	2.2842	2.2866
2.2935	2.2958	2.2980	2.3002	2.3024
2.3088	2.3109	2.3129	2.3150	2.3170
2.3229	2.3248	2.3267	2.3286	2.3305
2.3360	2.3378	2.3396	2.3414	2.3431
2.3483	2.3500	2.3517	2.3534	2.3551
2.3602	2.3619	2.3636	2.3653	2.3669
2.3719	2.3736	2.3752	2.3768	2.3785
2.3833	2.3849	2.3865	2.3881	2.3897
2.3944	2.3960	2.3976	2.3991	2.4007
2.4053	2.4068	2.4084	2.4099	2.4114
2.4159	2.4174	2.4189	2.4204	2.4219
2.4263	2.4278	2.4292	2.4307	2.4322
2.4365	2.4379	2.4394	2.4408	2.4422
2.4464	2.4478	2.4493	2.4506	2.4520
2.4562	2.4576	2.4589	2.4603	2.4617
2.4658	2.4671	2.4685	2.4698	2.4711
2.4751	2.4765	2.4778	2.4791	2.4804
2.4843	2.4856	2.4869	2.4882	2.4895
2.4934	2.4946	2.4959	2.4972	2.4984
2.5022	2.5035	2.5047	2.5060	2.5072

2.5085	2.5097					
		2.5109	2.5122	2.5134	2.5146	2.5158
2.5170	2.5183					
		2.5195	2.5207	2.5219	2.5231	2.5243
2.5255	2.5267					
		2.5279	2.5291	2.5303	2.5314	2.5326
2.5338	2.5350					
		2.5361	2.5373	2.5385	2.5396	2.5408
2.5420	2.5431					
		2.5443	2.5454	2.5466	2.5477	2.5488
2.5500	2.5511					
		2.5523	2.5534	2.5545	2.5556	2.5568
2.5579	2.5590					
		2.5601	2.5612	2.5623	2.5635	2.5646
2.5657	2.5668					
		2.5679	2.5690	2.5701	2.5711	2.5722
2.5733	2.5744					
		2.5755	2.5766	2.5776	2.5787	2.5798
2.5809	2.5819					
		2.5830	2.5841	2.5851	2.5862	2.5872
2.5883	2.5893					
		2.5904	2.5914	2.5925	2.5935	2.5946
2.5956	2.5966					
		2.5977	2.5987	2.5997	2.6008	2.6018
2.6028	2.6038					
		2.6049	2.6059	2.6069	2.6079	2.6089
2.6099	2.6109					
		2.6119	2.6129	2.6139	2.6149	2.6159
2.6169	2.6179					
		2.6189	2.6199	2.6209	2.6219	2.6229
2.6238	2.6248					
		2.6258	2.6268	2.6278	2.6287	2.6297
2.6307	2.6316					
		2.6326	2.6336	2.6345	2.6355	2.6364
2.6374	2.6384					
		2.6393	2.6403	2.6412	2.6421	2.6431
2.6440	2.6450					
		2.6459	2.6469	2.6478	2.6487	2.6497
2.6506	2.6515					
		2.6524	2.6534	2.6543	2.6552	2.6561
2.6571	2.6580					
		2.6589	2.6598	2.6607	2.6616	2.6625
2.6634	2.6644					
		2.6653	2.6662	2.6671	2.6680	2.6689
2.6698	2.6707					
		2.6715	2.6724	2.6733	2.6742	2.6751
2.6760	2.6769					
		2.6778	2.6786	2.6795	2.6804	2.6813
2.6821	2.6830					
		2.6839	2.6848	2.6856	2.6865	2.6874
2.6882	2.6891					
		2.6900	2.6908	2.6917	2.6925	2.6934

```
2.6942  2.6951
                        2.6959  2.6968  2.6976  2.6985  2.6993
2.7002  2.7010
                        2.7019  2.7027  2.7035  2.7044  2.7052
2.7061  2.7069
                        2.7077  2.7085  2.7094  2.7102  2.7110
2.7119  2.7127
                        2.7135  2.7143  2.7151  2.7160  2.7168
2.7176  2.7184
                        2.7192  2.7200  2.7209  2.7217  2.7225
2.7233  2.7241
                        2.7249  2.7257  2.7265  2.7273  2.7281
2.7289  2.7297
                        2.7305  2.7313  2.7321  2.7329  2.7337
2.7344  2.7352
                        2.7360  2.7368  2.7376  2.7384  2.7392
2.7399  2.7407
                        2.7415  2.7423  2.7431  2.7438  2.7446
2.7454  2.7462
                        2.7469  2.7477  2.7485  2.7492  2.7500

     *
     *SEDIMENT BULK          CODE=1  FACTOR=1.00
     *
     *S**** COMPUTE BASIN - Off site
     COMPUTE NM HYD          ID=1 HYD NO=1 DA=0.004
                             PER A=100 PER B=0 PER C=0 PER D=0
                                           TP=0.152 RAIN=-1

          K =   .182622HR    TP =   .152000HR    K/TP RATIO =
1.201459     SHAPE CONSTANT, N =  2.957910
          UNIT PEAK =   7.3256    CFS   UNIT VOLUME =    .9975
B =   278.37      P60 = 2.0100
          AREA =      .004000 SQ MI    IA =    .65000 INCHES
INF =   1.67000 INCHES PER HOUR
          RUNOFF COMPUTED BY INITIAL ABSTRACTION/INFILTRATION
NUMBER METHOD - DT =   .050000

     PRINT HYD               ID=1 CODE=1

                                          OUTFLOW HYDROGRAPH
REACH     1.00

          RUNOFF VOLUME =      .52958 INCHES     =        .1130
ACRE-FEET
          PEAK DISCHARGE RATE =      3.54 CFS  AT   1.550 HOURS
BASIN AREA =   .0040 SQ. MI.


     *
```

```
*S**** COMPUTE BASIN- Site South  (1.25 ac)
COMPUTE NM HYD          ID=2 HYD NO=2 DA=0.002
                        PER A=0 PER B=15 PER C=0 PER D=85
                                        TP=0.133 RAIN=-1

          K =    .072485HR    TP =    .133000HR    K/TP RATIO =
.545000     SHAPE CONSTANT, N =  7.106420
          UNIT PEAK =    6.7268    CFS   UNIT VOLUME =    .9976
B =   526.28      P60 = 2.0100
          AREA =       .001700 SQ MI    IA =    .10000 INCHES
INF =    .04000 INCHES PER HOUR
          RUNOFF COMPUTED BY INITIAL ABSTRACTION/INFILTRATION
NUMBER METHOD - DT =   .050000


          K =    .131790HR    TP =    .133000HR    K/TP RATIO =
.990905     SHAPE CONSTANT, N =  3.563124
          UNIT PEAK =    .73287    CFS   UNIT VOLUME =    .9821
B =   324.91      P60 = 2.0100
          AREA =       .000300 SQ MI    IA =    .50000 INCHES
INF =   1.25000 INCHES PER HOUR
          RUNOFF COMPUTED BY INITIAL ABSTRACTION/INFILTRATION
NUMBER METHOD - DT =   .050000

     PRINT HYD            ID=2 CODE=1

                                                OUTFLOW HYDROGRAPH
REACH     2.00


         RUNOFF VOLUME =     2.25624 INCHES     =        .2407
ACRE-FEET
         PEAK DISCHARGE RATE =       5.49 CFS  AT   1.500 HOURS
BASIN AREA =   .0020 SQ. MI.


     PUNCH HYD            ID=2
     ADD HYD              ID=3 HYD=Off plus S ID I=2 ID II=1
     PRINT HYD            ID=3 CODE=1            *

AREA-Off: where/what is this?                   HYDROGRAPH FROM
South + offsite

         RUNOFF VOLUME =     1.10508 INCHES     =        .3536
ACRE-FEET
         PEAK DISCHARGE RATE =       8.86 CFS  AT   1.500 HOURS
BASIN AREA =   .0060 SQ. MI.
```

*
*
*
South
*S Route through pond 12" pipe control
*
ROUTE RESERVOIR ID=4 HYD=comb INFLOW ID=3 CODE=1

ELEV(FT)	OUTFLOW(CFS)	STORAGE(AC FT)
5140.0	0	0
5140.5 TG	1.0	0.061
5141.0	2.0	0.122
5141.5	1.65	0.127
5142.0 TCurb	3.3	0.132
5143.0	4.22	0.141
5144.0	4.96	0.151
5145.0	5.62	0.161
5146.0	6.2	0.170

* * * * * * * * * * * * * * * * *

TIME (HRS)	INFLOW (CFS)	ELEV (FEET)	VOLUME (AC-FT)	OUTFLOW (CFS)
.00	.00	5140.00	.000	.00
.05	.00	5140.00	.000	.00
.10	.00	5140.00	.000	.00
.15	.00	5140.00	.000	.00
.20	.00	5140.00	.000	.00
.25	.00	5140.00	.000	.00
.30	.00	5140.00	.000	.00
.35	.00	5140.00	.000	.00
.40	.00	5140.00	.000	.00
.45	.00	5140.00	.000	.00
.50	.00	5140.00	.000	.00
.55	.00	5140.00	.000	.00
.60	.00	5140.00	.000	.00
.65	.00	5140.00	.000	.00
.70	.00	5140.00	.000	.00
.75	.00	5140.00	.000	.00
.80	.00	5140.00	.000	.00
.85	.00	5140.00	.000	.00
.90	.00	5140.00	.000	.00
.95	.00	5140.00	.000	.00

1.00	.00	5140.00	.000	.00
1.05	.00	5140.00	.000	.00
1.10	.00	5140.00	.000	.00
1.15	.01	5140.00	.000	.00
1.20	.15	5140.00	.000	.01
1.25	.54	5140.01	.002	.03
1.30	1.18	5140.04	.005	.08
1.35	2.23	5140.09	.012	.19
1.40	4.42	5140.20	.024	.39
1.45	7.29	5140.38	.046	.75
1.50	8.86	5140.62	.075	1.23
1.55	8.34	5140.86	.105	1.71
1.60	6.89	5141.63	.128	2.06
1.65	5.53	5142.99	.141	4.21
1.70	4.47	5143.27	.144	4.42
1.75	3.68	5143.15	.143	4.33
1.80	3.08	5142.80	.139	4.04
1.85	2.61	5142.35	.135	3.62
1.90	2.24	5141.93	.131	3.08
1.95	1.94	5141.69	.129	2.27
2.00	1.71	5140.95	.116	1.91
2.05	1.52	5140.83	.102	1.67
2.10	1.22	5140.87	.106	1.74
2.15	.92	5140.99	.120	1.97
2.20	.73	5140.97	.118	1.93
2.25	.60	5140.92	.113	1.85
2.30	.52	5140.88	.108	1.76
2.35	.46	5140.84	.102	1.68
2.40	.41	5140.80	.098	1.60
2.45	.36	5140.76	.093	1.52
2.50	.32	5140.72	.088	1.44
2.55	.29	5140.68	.083	1.37
2.60	.26	5140.65	.079	1.30
2.65	.23	5140.61	.075	1.23
2.70	.20	5140.58	.071	1.16
2.75	.18	5140.55	.067	1.10

Later

TIME (HRS)	INFLOW (CFS)	ELEV (FEET)	VOLUME (AC-FT)	OUTFLOW (CFS)
2.80	.17	5140.52	.063	1.04
2.85	.15	5140.49	.060	.98
2.90	.14	5140.46	.056	.92
2.95	.13	5140.44	.053	.87
3.00	.12	5140.41	.050	.82
3.05	.11	5140.39	.047	.78
3.10	.10	5140.37	.045	.73
3.15	.09	5140.35	.042	.69
3.20	.09	5140.33	.040	.65
3.25	.08	5140.31	.037	.61
3.30	.08	5140.29	.035	.58
3.35	.07	5140.27	.033	.55

3.40	.07	5140.26	.031	.51
3.45	.06	5140.24	.030	.49
3.50	.06	5140.23	.028	.46
3.55	.06	5140.22	.026	.43
3.60	.06	5140.20	.025	.41
3.65	.05	5140.19	.023	.38
3.70	.05	5140.18	.022	.36
3.75	.05	5140.17	.021	.34
3.80	.05	5140.16	.020	.32
3.85	.04	5140.15	.019	.30
3.90	.04	5140.14	.018	.29
3.95	.04	5140.14	.017	.27
4.00	.04	5140.13	.016	.26
4.05	.04	5140.12	.015	.24
4.10	.04	5140.11	.014	.23
4.15	.04	5140.11	.013	.22
4.20	.04	5140.10	.012	.20
4.25	.04	5140.10	.012	.19
4.30	.04	5140.09	.011	.18
4.35	.03	5140.09	.011	.17
4.40	.03	5140.08	.010	.16
4.45	.03	5140.08	.009	.16
4.50	.03	5140.07	.009	.15
4.55	.03	5140.07	.009	.14
4.60	.03	5140.07	.008	.13
4.65	.03	5140.06	.008	.13
4.70	.03	5140.06	.007	.12
4.75	.03	5140.06	.007	.11
4.80	.03	5140.05	.007	.11
4.85	.03	5140.05	.006	.10
4.90	.03	5140.05	.006	.10
4.95	.03	5140.05	.006	.09
5.00	.03	5140.04	.005	.09
5.05	.03	5140.04	.005	.09
5.10	.03	5140.04	.005	.08
5.15	.03	5140.04	.005	.08
5.20	.03	5140.04	.005	.08
5.25	.03	5140.04	.004	.07
5.30	.03	5140.04	.004	.07
5.35	.03	5140.03	.004	.07
5.40	.03	5140.03	.004	.07
5.45	.03	5140.03	.004	.06
5.50	.03	5140.03	.004	.06
5.55	.03	5140.03	.004	.06

TIME (HRS)	INFLOW (CFS)	ELEV (FEET)	VOLUME (AC-FT)	OUTFLOW (CFS)
5.60	.03	5140.03	.004	.06
5.65	.03	5140.03	.003	.06
5.70	.03	5140.03	.003	.05
5.75	.03	5140.03	.003	.05

5.80	.04	5140.03	.003	.05
5.85	.04	5140.03	.003	.05
5.90	.04	5140.02	.003	.05
5.95	.04	5140.02	.003	.05
6.00	.04	5140.02	.003	.05
6.05	.04	5140.02	.003	.05
6.10	.04	5140.02	.003	.05
6.15	.04	5140.02	.003	.05
6.20	.04	5140.02	.003	.05
6.25	.04	5140.02	.003	.05
6.30	.04	5140.02	.003	.04
6.35	.04	5140.02	.003	.04
6.40	.04	5140.02	.003	.04
6.45	.04	5140.02	.003	.04
6.50	.04	5140.02	.003	.04
6.55	.04	5140.02	.003	.04
6.60	.04	5140.02	.003	.04
6.65	.04	5140.02	.003	.04
6.70	.04	5140.02	.003	.04
6.75	.04	5140.02	.003	.04
6.80	.04	5140.02	.002	.04
6.85	.04	5140.02	.002	.04
6.90	.04	5140.02	.002	.04
6.95	.04	5140.02	.002	.04
7.00	.04	5140.02	.002	.04
7.05	.04	5140.02	.002	.04
7.10	.04	5140.02	.002	.04
7.15	.04	5140.02	.002	.04
7.20	.04	5140.02	.002	.04
7.25	.04	5140.02	.002	.04
7.30	.04	5140.02	.002	.04
7.35	.04	5140.02	.002	.04
7.40	.03	5140.02	.002	.04
7.45	.03	5140.02	.002	.04
7.50	.03	5140.02	.002	.04
7.55	.03	5140.02	.002	.04
7.60	.03	5140.02	.002	.04
7.65	.03	5140.02	.002	.04
7.70	.03	5140.02	.002	.04
7.75	.03	5140.02	.002	.04
7.80	.03	5140.02	.002	.04
7.85	.03	5140.02	.002	.04
7.90	.03	5140.02	.002	.04
7.95	.03	5140.02	.002	.04
8.00	.03	5140.02	.002	.04
8.05	.03	5140.02	.002	.04
8.10	.03	5140.02	.002	.04
8.15	.03	5140.02	.002	.04
8.20	.03	5140.02	.002	.04
8.25	.03	5140.02	.002	.03
8.30	.03	5140.02	.002	.03
8.35	.03	5140.02	.002	.03

Sout Pond

TIME (HRS)	INFLOW (CFS)	ELEV (FEET)	VOLUME (AC-FT)	OUTFLOW (CFS)
8.40	.03	5140.02	.002	.03
8.45	.03	5140.02	.002	.03
8.50	.03	5140.02	.002	.03
8.55	.03	5140.02	.002	.03
8.60	.03	5140.02	.002	.03
8.65	.03	5140.02	.002	.03
8.70	.03	5140.02	.002	.03
8.75	.03	5140.02	.002	.03
8.80	.03	5140.02	.002	.03
8.85	.03	5140.02	.002	.03
8.90	.03	5140.02	.002	.03
8.95	.03	5140.02	.002	.03
9.00	.03	5140.02	.002	.03
9.05	.03	5140.02	.002	.03
9.10	.03	5140.02	.002	.03
9.15	.03	5140.02	.002	.03
9.20	.03	5140.02	.002	.03
9.25	.03	5140.02	.002	.03
9.30	.03	5140.02	.002	.03
9.35	.03	5140.02	.002	.03
9.40	.03	5140.02	.002	.03
9.45	.03	5140.02	.002	.03
9.50	.03	5140.02	.002	.03
9.55	.03	5140.02	.002	.03
9.60	.03	5140.02	.002	.03
9.65	.03	5140.02	.002	.03
9.70	.03	5140.02	.002	.03
9.75	.03	5140.02	.002	.03
9.80	.03	5140.02	.002	.03
9.85	.03	5140.02	.002	.03
9.90	.03	5140.02	.002	.03
9.95	.03	5140.02	.002	.03
10.00	.03	5140.02	.002	.03
10.05	.03	5140.02	.002	.03
10.10	.03	5140.02	.002	.03
10.15	.03	5140.02	.002	.03
10.20	.03	5140.02	.002	.03
10.25	.03	5140.02	.002	.03
10.30	.03	5140.02	.002	.03
10.35	.03	5140.02	.002	.03
10.40	.03	5140.02	.002	.03
10.45	.03	5140.02	.002	.03
10.50	.03	5140.02	.002	.03
10.55	.03	5140.02	.002	.03
10.60	.03	5140.02	.002	.03
10.65	.03	5140.02	.002	.03
10.70	.03	5140.01	.002	.03
10.75	.03	5140.01	.002	.03

South pond drain

10.80	.03	5140.01	.002	.03
10.85	.03	5140.01	.002	.03
10.90	.03	5140.01	.002	.03
10.95	.03	5140.01	.002	.03
11.00	.03	5140.01	.002	.03
11.05	.03	5140.01	.002	.03
11.10	.03	5140.01	.002	.03
11.15	.03	5140.01	.002	.03

TIME (HRS)	INFLOW (CFS)	ELEV (FEET)	VOLUME (AC-FT)	OUTFLOW (CFS)
11.20	.03	5140.01	.002	.03
11.25	.03	5140.01	.002	.03
11.30	.03	5140.01	.002	.03
11.35	.03	5140.01	.002	.03
11.40	.03	5140.01	.002	.03
11.45	.03	5140.01	.002	.03
11.50	.03	5140.01	.002	.03
11.55	.03	5140.01	.002	.03
11.60	.03	5140.01	.002	.03
11.65	.03	5140.01	.002	.03
11.70	.03	5140.01	.002	.03
11.75	.03	5140.01	.002	.03
11.80	.03	5140.01	.002	.03
11.85	.03	5140.01	.002	.03
11.90	.03	5140.01	.002	.03
11.95	.03	5140.01	.002	.03
12.00	.03	5140.01	.002	.03
12.05	.03	5140.01	.002	.03
12.10	.03	5140.01	.002	.03
12.15	.03	5140.01	.002	.03
12.20	.03	5140.01	.002	.03
12.25	.03	5140.01	.002	.03
12.30	.03	5140.01	.002	.03
12.35	.03	5140.01	.002	.03
12.40	.03	5140.01	.002	.03
12.45	.03	5140.01	.002	.03
12.50	.03	5140.01	.002	.03
12.55	.03	5140.01	.002	.03
12.60	.03	5140.01	.002	.03
12.65	.03	5140.01	.002	.03
12.70	.03	5140.01	.002	.03
12.75	.03	5140.01	.002	.03
12.80	.03	5140.01	.002	.03
12.85	.03	5140.01	.002	.03
12.90	.03	5140.01	.002	.03
12.95	.03	5140.01	.002	.03
13.00	.03	5140.01	.002	.03
13.05	.03	5140.01	.002	.03
13.10	.03	5140.01	.002	.03
13.15	.03	5140.01	.002	.03

13.20	.02	5140.01	.002	.03
13.25	.03	5140.01	.002	.03
13.30	.03	5140.01	.002	.03
13.35	.03	5140.01	.002	.03
13.40	.03	5140.01	.002	.03
13.45	.02	5140.01	.002	.03
13.50	.02	5140.01	.002	.03
13.55	.02	5140.01	.002	.03
13.60	.02	5140.01	.002	.03
13.65	.02	5140.01	.002	.03
13.70	.02	5140.01	.002	.03
13.75	.02	5140.01	.002	.03
13.80	.02	5140.01	.002	.03
13.85	.02	5140.01	.002	.03
13.90	.02	5140.01	.002	.03
13.95	.02	5140.01	.002	.03

TIME (HRS)	INFLOW (CFS)	ELEV (FEET)	VOLUME (AC-FT)	OUTFLOW (CFS)
14.00	.02	5140.01	.002	.03
14.05	.02	5140.01	.002	.03
14.10	.02	5140.01	.002	.03
14.15	.02	5140.01	.002	.02
14.20	.02	5140.01	.002	.02
14.25	.02	5140.01	.002	.02
14.30	.02	5140.01	.002	.02
14.35	.02	5140.01	.002	.02
14.40	.02	5140.01	.002	.02
14.45	.02	5140.01	.002	.02
14.50	.02	5140.01	.001	.02
14.55	.02	5140.01	.001	.02
14.60	.02	5140.01	.001	.02
14.65	.02	5140.01	.001	.02
14.70	.02	5140.01	.001	.02
14.75	.02	5140.01	.001	.02
14.80	.02	5140.01	.001	.02
14.85	.02	5140.01	.001	.02
14.90	.02	5140.01	.001	.02
14.95	.02	5140.01	.001	.02
15.00	.02	5140.01	.001	.02
15.05	.02	5140.01	.001	.02
15.10	.02	5140.01	.001	.02
15.15	.02	5140.01	.001	.02
15.20	.02	5140.01	.001	.02
15.25	.02	5140.01	.001	.02
15.30	.02	5140.01	.001	.02
15.35	.02	5140.01	.001	.02
15.40	.02	5140.01	.001	.02
15.45	.02	5140.01	.001	.02
15.50	.02	5140.01	.001	.02
15.55	.02	5140.01	.001	.02

South pond drawdown

15.60	.02	5140.01	.001	.02
15.65	.02	5140.01	.001	.02
15.70	.02	5140.01	.001	.02
15.75	.02	5140.01	.001	.02
15.80	.02	5140.01	.001	.02
15.85	.02	5140.01	.001	.02
15.90	.02	5140.01	.001	.02
15.95	.02	5140.01	.001	.02
16.00	.02	5140.01	.001	.02
16.05	.02	5140.01	.001	.02
16.10	.02	5140.01	.001	.02
16.15	.02	5140.01	.001	.02
16.20	.02	5140.01	.001	.02
16.25	.02	5140.01	.001	.02
16.30	.02	5140.01	.001	.02
16.35	.02	5140.01	.001	.02
16.40	.02	5140.01	.001	.02
16.45	.02	5140.01	.001	.02
16.50	.02	5140.01	.001	.02
16.55	.02	5140.01	.001	.02
16.60	.02	5140.01	.001	.02
16.65	.02	5140.01	.001	.02
16.70	.02	5140.01	.001	.02
16.75	.02	5140.01	.001	.02

TIME (HRS)	INFLOW (CFS)	ELEV (FEET)	VOLUME (AC-FT)	OUTFLOW (CFS)
16.80	.02	5140.01	.001	.02
16.85	.02	5140.01	.001	.02
16.90	.02	5140.01	.001	.02
16.95	.02	5140.01	.001	.02
17.00	.02	5140.01	.001	.02
17.05	.02	5140.01	.001	.02
17.10	.02	5140.01	.001	.02
17.15	.02	5140.01	.001	.02
17.20	.02	5140.01	.001	.02
17.25	.02	5140.01	.001	.02
17.30	.02	5140.01	.001	.02
17.35	.02	5140.01	.001	.02
17.40	.02	5140.01	.001	.02
17.45	.02	5140.01	.001	.02
17.50	.02	5140.01	.001	.02
17.55	.02	5140.01	.001	.02
17.60	.02	5140.01	.001	.02
17.65	.02	5140.01	.001	.02
17.70	.02	5140.01	.001	.02
17.75	.02	5140.01	.001	.02
17.80	.02	5140.01	.001	.02
17.85	.02	5140.01	.001	.02
17.90	.02	5140.01	.001	.02
17.95	.02	5140.01	.001	.02

18.00	.02	5140.01	.001	.02
18.05	.02	5140.01	.001	.02
18.10	.02	5140.01	.001	.02
18.15	.02	5140.01	.001	.02
18.20	.02	5140.01	.001	.02
18.25	.02	5140.01	.001	.02
18.30	.02	5140.01	.001	.02
18.35	.02	5140.01	.001	.02
18.40	.02	5140.01	.001	.02
18.45	.02	5140.01	.001	.02
18.50	.02	5140.01	.001	.02
18.55	.02	5140.01	.001	.02
18.60	.02	5140.01	.001	.02
18.65	.02	5140.01	.001	.02
18.70	.02	5140.01	.001	.02
18.75	.02	5140.01	.001	.02
18.80	.02	5140.01	.001	.02
18.85	.02	5140.01	.001	.02
18.90	.02	5140.01	.001	.02
18.95	.02	5140.01	.001	.02
19.00	.02	5140.01	.001	.02
19.05	.02	5140.01	.001	.02
19.10	.02	5140.01	.001	.02
19.15	.02	5140.01	.001	.02
19.20	.02	5140.01	.001	.02
19.25	.02	5140.01	.001	.02
19.30	.02	5140.01	.001	.02
19.35	.02	5140.01	.001	.02
19.40	.02	5140.01	.001	.02
19.45	.02	5140.01	.001	.02
19.50	.02	5140.01	.001	.02
19.55	.02	5140.01	.001	.02

TIME (HRS)	INFLOW (CFS)	ELEV (FEET)	VOLUME (AC-FT)	OUTFLOW (CFS)
19.60	.02	5140.01	.001	.02
19.65	.02	5140.01	.001	.02
19.70	.02	5140.01	.001	.02
19.75	.02	5140.01	.001	.02
19.80	.02	5140.01	.001	.02
19.85	.02	5140.01	.001	.02
19.90	.02	5140.01	.001	.02
19.95	.02	5140.01	.001	.02
20.00	.02	5140.01	.001	.02
20.05	.02	5140.01	.001	.02
20.10	.02	5140.01	.001	.02
20.15	.02	5140.01	.001	.02
20.20	.02	5140.01	.001	.02
20.25	.02	5140.01	.001	.02
20.30	.02	5140.01	.001	.02
20.35	.02	5140.01	.001	.02

20.40	.02	5140.01	.001	.02
20.45	.02	5140.01	.001	.02
20.50	.02	5140.01	.001	.02
20.55	.02	5140.01	.001	.02
20.60	.02	5140.01	.001	.02
20.65	.02	5140.01	.001	.02
20.70	.02	5140.01	.001	.02
20.75	.02	5140.01	.001	.02
20.80	.02	5140.01	.001	.02
20.85	.02	5140.01	.001	.02
20.90	.02	5140.01	.001	.02
20.95	.02	5140.01	.001	.02
21.00	.02	5140.01	.001	.02
21.05	.02	5140.01	.001	.02
21.10	.02	5140.01	.001	.02
21.15	.02	5140.01	.001	.02
21.20	.02	5140.01	.001	.02
21.25	.02	5140.01	.001	.02
21.30	.02	5140.01	.001	.02
21.35	.02	5140.01	.001	.02
21.40	.02	5140.01	.001	.02
21.45	.02	5140.01	.001	.02
21.50	.02	5140.01	.001	.02
21.55	.02	5140.01	.001	.02
21.60	.02	5140.01	.001	.02
21.65	.02	5140.01	.001	.02
21.70	.02	5140.01	.001	.02
21.75	.02	5140.01	.001	.02
21.80	.02	5140.01	.001	.02
21.85	.02	5140.01	.001	.02
21.90	.02	5140.01	.001	.02
21.95	.02	5140.01	.001	.02
22.00	.02	5140.01	.001	.02
22.05	.02	5140.01	.001	.02
22.10	.02	5140.01	.001	.02
22.15	.02	5140.01	.001	.02
22.20	.02	5140.01	.001	.02
22.25	.02	5140.01	.001	.02
22.30	.02	5140.01	.001	.02
22.35	.02	5140.01	.001	.02

TIME (HRS)	INFLOW (CFS)	ELEV (FEET)	VOLUME (AC-FT)	OUTFLOW (CFS)
22.40	.02	5140.01	.001	.02
22.45	.02	5140.01	.001	.02
22.50	.02	5140.01	.001	.02
22.55	.02	5140.01	.001	.02
22.60	.02	5140.01	.001	.02
22.65	.02	5140.01	.001	.02
22.70	.02	5140.01	.001	.02
22.75	.02	5140.01	.001	.02

South pond drainage

22.80	.02	5140.01	.001	.02
22.85	.02	5140.01	.001	.02
22.90	.02	5140.01	.001	.02
22.95	.02	5140.01	.001	.02
23.00	.02	5140.01	.001	.02
23.05	.02	5140.01	.001	.02
23.10	.02	5140.01	.001	.02
23.15	.02	5140.01	.001	.02
23.20	.02	5140.01	.001	.02
23.25	.02	5140.01	.001	.02
23.30	.02	5140.01	.001	.02
23.35	.02	5140.01	.001	.02
23.40	.02	5140.01	.001	.02
23.45	.02	5140.01	.001	.02
23.50	.02	5140.01	.001	.02
23.55	.02	5140.01	.001	.02
23.60	.02	5140.01	.001	.02
23.65	.02	5140.01	.001	.02
23.70	.02	5140.01	.001	.02
23.75	.02	5140.01	.001	.02
23.80	.02	5140.01	.001	.02
23.85	.02	5140.01	.001	.02
23.90	.02	5140.01	.001	.02
23.95	.02	5140.01	.001	.02
24.00	.02	5140.01	.001	.02
24.05	.02	5140.01	.001	.02
24.10	.01	5140.01	.001	.02
24.15	.01	5140.01	.001	.02
24.20	.00	5140.01	.001	.02
24.25	.00	5140.01	.001	.02
24.30	.00	5140.01	.001	.01
24.35	.00	5140.01	.001	.01
24.40	.00	5140.01	.001	.01
24.45	.00	5140.01	.001	.01
24.50	.00	5140.01	.001	.01
24.55	.00	5140.01	.001	.01
24.60	.00	5140.00	.001	.01
24.65	.00	5140.00	.001	.01
24.70	.00	5140.00	.001	.01
24.75	.00	5140.00	.000	.01
24.80	.00	5140.00	.000	.01
24.85	.00	5140.00	.000	.01
24.90	.00	5140.00	.000	.01
24.95	.00	5140.00	.000	.01
25.00	.00	5140.00	.000	.01
25.05	.00	5140.00	.000	.01
25.10	.00	5140.00	.000	.00

~~5147~~ max

PEAK DISCHARGE = 4.423 CFS - PEAK OCCURS AT HOUR 1.70

MAXIMUM WATER SURFACE ELEVATION = 5143.274 South pond

MAXIMUM STORAGE = .1437 AC-FT INCREMENTAL

TIME= .050000HRS

what is of

Redo north pond.?

```
*
*
PRINT HYD                    ID=4 CODE=0

                                                HYDROGRAPH FROM
AREA comb

          TIME      FLOW            TIME      FLOW            TIME
FLOW           TIME      FLOW            TIME      FLOW
           HRS       CFS              HRS       CFS              HRS
CFS            HRS       CFS              HRS       CFS
           .000        .0            5.300       .1           10.600
.0         15.900        .0           21.200        .0
           .050        .0            5.350       .1           10.650
.0         15.950        .0           21.250        .0
           .100        .0            5.400       .1           10.700
.0         16.000        .0           21.300        .0
           .150        .0            5.450       .1           10.750
.0         16.050        .0           21.350        .0
           .200        .0            5.500       .1           10.800
.0         16.100        .0           21.400        .0
           .250        .0            5.550       .1           10.850
.0         16.150        .0           21.450        .0
           .300        .0            5.600       .1           10.900
.0         16.200        .0           21.500        .0
           .350        .0            5.650       .1           10.950
.0         16.250        .0           21.550        .0
           .400        .0            5.700       .1           11.000
.0         16.300        .0           21.600        .0
           .450        .0            5.750       .1           11.050
.0         16.350        .0           21.650        .0
           .500        .0            5.800       .1           11.100
.0         16.400        .0           21.700        .0
           .550        .0            5.850       .1           11.150
.0         16.450        .0           21.750        .0
           .600        .0            5.900       .1           11.200
.0         16.500        .0           21.800        .0
           .650        .0            5.950       .0           11.250
.0         16.550        .0           21.850        .0
           .700        .0            6.000       .0           11.300
.0         16.600        .0           21.900        .0
           .750        .0            6.050       .0           11.350
.0         16.650        .0           21.950        .0
           .800        .0            6.100       .0           11.400
.0         16.700        .0           22.000        .0
           .850        .0            6.150       .0           11.450
.0         16.750        .0           22.050        .0
           .900        .0            6.200       .0           11.500
.0         16.800        .0           22.100        .0
           .950        .0            6.250       .0           11.550
.0         16.850        .0           22.150        .0
```

	1.000	.0	6.300	.0	11.600
.0	16.900	.0	22.200	.0	
	1.050	.0	6.350	.0	11.650
.0	16.950	.0	22.250	.0	
	1.100	.0	6.400	.0	11.700
.0	17.000	.0	22.300	.0	
	1.150	.0	6.450	.0	11.750
.0	17.050	.0	22.350	.0	
	1.200	.0	6.500	.0	11.800
.0	17.100	.0	22.400	.0	
	1.250	.0	6.550	.0	11.850
.0	17.150	.0	22.450	.0	
	1.300	.1	6.600	.0	11.900
.0	17.200	.0	22.500	.0	
	1.350	.2	6.650	.0	11.950
.0	17.250	.0	22.550	.0	
	1.400	.4	6.700	.0	12.000
.0	17.300	.0	22.600	.0	
	1.450	.8	6.750	.0	12.050
.0	17.350	.0	22.650	.0	
	1.500	1.2	6.800	.0	12.100
.0	17.400	.0	22.700	.0	
	1.550	1.7	6.850	.0	12.150
.0	17.450	.0	22.750	.0	
	1.600	2.1	6.900	.0	12.200
.0	17.500	.0	22.800	.0	
	1.650	4.2	6.950	.0	12.250
.0	17.550	.0	22.850	.0	
	1.700	4.4	7.000	.0	12.300
.0	17.600	.0	22.900	.0	
	1.750	4.3	7.050	.0	12.350
.0	17.650	.0	22.950	.0	
	1.800	4.0	7.100	.0	12.400
.0	17.700	.0	23.000	.0	
	1.850	3.6	7.150	.0	12.450
.0	17.750	.0	23.050	.0	
	1.900	3.1	7.200	.0	12.500
.0	17.800	.0	23.100	.0	
	1.950	2.3	7.250	.0	12.550
.0	17.850	.0	23.150	.0	
	2.000	1.9	7.300	.0	12.600
.0	17.900	.0	23.200	.0	
	2.050	1.7	7.350	.0	12.650
.0	17.950	.0	23.250	.0	
	2.100	1.7	7.400	.0	12.700
.0	18.000	.0	23.300	.0	
	2.150	2.0	7.450	.0	12.750
.0	18.050	.0	23.350	.0	
	2.200	1.9	7.500	.0	12.800
.0	18.100	.0	23.400	.0	
	2.250	1.8	7.550	.0	12.850
.0	18.150	.0	23.450	.0	

	2.300	1.8	7.600	.0	12.900	
.0	18.200	.0	23.500	.0		
	2.350	1.7	7.650	.0	12.950	
.0	18.250	.0	23.550	.0		
	2.400	1.6	7.700	.0	13.000	
.0	18.300	.0	23.600	.0		
	2.450	1.5	7.750	.0	13.050	
.0	18.350	.0	23.650	.0		
	2.500	1.4	7.800	.0	13.100	
.0	18.400	.0	23.700	.0		
	2.550	1.4	7.850	.0	13.150	
.0	18.450	.0	23.750	.0		
	2.600	1.3	7.900	.0	13.200	
.0	18.500	.0	23.800	.0		
	2.650	1.2	7.950	.0	13.250	
.0	18.550	.0	23.850	.0		
	2.700	1.2	8.000	.0	13.300	
.0	18.600	.0	23.900	.0		
	2.750	1.1	8.050	.0	13.350	
.0	18.650	.0	23.950	.0		
	2.800	1.0	8.100	.0	13.400	
.0	18.700	.0	24.000	.0		
	2.850	1.0	8.150	.0	13.450	
.0	18.750	.0	24.050	.0		
	2.900	.9	8.200	.0	13.500	
.0	18.800	.0	24.100	.0		
	2.950	.9	8.250	.0	13.550	
.0	18.850	.0	24.150	.0		
	3.000	.8	8.300	.0	13.600	
.0	18.900	.0	24.200	.0		
	3.050	.8	8.350	.0	13.650	
.0	18.950	.0	24.250	.0		
	3.100	.7	8.400	.0	13.700	
.0	19.000	.0	24.300	.0		
	3.150	.7	8.450	.0	13.750	
.0	19.050	.0	24.350	.0		
	3.200	.7	8.500	.0	13.800	
.0	19.100	.0	24.400	.0		
	3.250	.6	8.550	.0	13.850	
.0	19.150	.0	24.450	.0		
	3.300	.6	8.600	.0	13.900	
.0	19.200	.0	24.500	.0		
	3.350	.5	8.650	.0	13.950	
.0	19.250	.0	24.550	.0		
	3.400	.5	8.700	.0	14.000	
.0	19.300	.0	24.600	.0		
	3.450	.5	8.750	.0	14.050	
.0	19.350	.0	24.650	.0		
	3.500	.5	8.800	.0	14.100	
.0	19.400	.0	24.700	.0		
	3.550	.4	8.850	.0	14.150	
.0	19.450	.0	24.750	.0		

	3.600	.4	8.900	.0	14.200
.0	19.500	.0	24.800	.0	
	3.650	.4	8.950	.0	14.250
.0	19.550	.0	24.850	.0	
	3.700	.4	9.000	.0	14.300
.0	19.600	.0	24.900	.0	
	3.750	.3	9.050	.0	14.350
.0	19.650	.0	24.950	.0	
	3.800	.3	9.100	.0	14.400
.0	19.700	.0	25.000	.0	
	3.850	.3	9.150	.0	14.450
.0	19.750	.0	25.050	.0	
	3.900	.3	9.200	.0	14.500
.0	19.800	.0	25.100	.0	
	3.950	.3	9.250	.0	14.550
.0	19.850	.0	25.150	.0	
	4.000	.3	9.300	.0	14.600
.0	19.900	.0	25.200	.0	
	4.050	.2	9.350	.0	14.650
.0	19.950	.0	25.250	.0	
	4.100	.2	9.400	.0	14.700
.0	20.000	.0	25.300	.0	
	4.150	.2	9.450	.0	14.750
.0	20.050	.0	25.350	.0	
	4.200	.2	9.500	.0	14.800
.0	20.100	.0	25.400	.0	
	4.250	.2	9.550	.0	14.850
.0	20.150	.0	25.450	.0	
	4.300	.2	9.600	.0	14.900
.0	20.200	.0	25.500	.0	
	4.350	.2	9.650	.0	14.950
.0	20.250	.0	25.550	.0	
	4.400	.2	9.700	.0	15.000
.0	20.300	.0	25.600	.0	
	4.450	.2	9.750	.0	15.050
.0	20.350	.0	25.650	.0	
	4.500	.1	9.800	.0	15.100
.0	20.400	.0	25.700	.0	
	4.550	.1	9.850	.0	15.150
.0	20.450	.0	25.750	.0	
	4.600	.1	9.900	.0	15.200
.0	20.500	.0	25.800	.0	
	4.650	.1	9.950	.0	15.250
.0	20.550	.0	25.850	.0	
	4.700	.1	10.000	.0	15.300
.0	20.600	.0	25.900	.0	
	4.750	.1	10.050	.0	15.350
.0	20.650	.0	25.950	.0	
	4.800	.1	10.100	.0	15.400
.0	20.700	.0	26.000	.0	
	4.850	.1	10.150	.0	15.450
.0	20.750	.0	26.050	.0	

```
          4.900        .1          10.200        .0          15.500
.0         20.800        .0          26.100        .0
          4.950        .1          10.250        .0          15.550
.0         20.850        .0          26.150        .0
          5.000        .1          10.300        .0          15.600
.0         20.900        .0          26.200        .0
          5.050        .1          10.350        .0          15.650
.0         20.950        .0          26.250        .0
          5.100        .1          10.400        .0          15.700
.0         21.000        .0
          5.150        .1          10.450        .0          15.750
.0         21.050        .0
          5.200        .1          10.500        .0          15.800
.0         21.100        .0
          5.250        .1          10.550        .0          15.850
.0         21.150        .0

        RUNOFF VOLUME =     1.10508 INCHES     =        .3536
ACRE-FEET
        PEAK DISCHARGE RATE =        4.42 CFS  AT   1.700 HOURS
BASIN AREA =   .0060 SQ. MI.


     *
     *
     *Now Calculate Peak rate from northern 2.09 acres
     *
     *S**** COMPUTE BASIN
     COMPUTE NM HYD        ID=5 HYD NO=North DA=0.0033
                           PER A=0 PER B=15 PER C=0 PER D=85
                                        TP=0.133 RAIN=-1

          K =   .072485HR    TP =   .133000HR    K/TP RATIO =
.545000     SHAPE CONSTANT, N =  7.106420
          UNIT PEAK =   11.099    CFS   UNIT VOLUME =    .9981
B =   526.28      P60 = 2.0100
          AREA =      .002805 SQ MI    IA =    .10000 INCHES
INF =    .04000 INCHES PER HOUR
          RUNOFF COMPUTED BY INITIAL ABSTRACTION/INFILTRATION
NUMBER METHOD - DT =   .050000


          K =   .131790HR    TP =   .133000HR    K/TP RATIO =
.990905     SHAPE CONSTANT, N =  3.563124
          UNIT PEAK =   1.2092    CFS   UNIT VOLUME =    .9897
B =   324.91      P60 = 2.0100
          AREA =      .000495 SQ MI    IA =    .50000 INCHES
INF =   1.25000 INCHES PER HOUR
          RUNOFF COMPUTED BY INITIAL ABSTRACTION/INFILTRATION
NUMBER METHOD - DT =   .050000
```

PRINT HYD ID=5 CODE=1

HYDROGRAPH FROM AREA North

RUNOFF VOLUME = 2.25624 INCHES = .3971 ACRE-FEET
PEAK DISCHARGE RATE = 9.04 CFS AT 1.500 HOURS BASIN AREA = .0033 SQ. MI.

*

PRINT HYD ID=5

HYDROGRAPH FROM AREA North

TIME HRS	FLOW CFS	TIME HRS	FLOW CFS	TIME HRS	FLOW CFS	TIME HRS	FLOW CFS
.000	.0	14.850	.0	4.950	.1	9.900	.0
.050	.0	14.900	.0	5.000	.1	9.950	.0
.100	.0	14.950	.0	5.050	.1	10.000	.0
.150	.0	15.000	.0	5.100	.1	10.050	.0
.200	.0	15.050	.0	5.150	.1	10.100	.0
.250	.0	15.100	.0	5.200	.1	10.150	.0
.300	.0	15.150	.0	5.250	.1	10.200	.0
.350	.0	15.200	.0	5.300	.1	10.250	.0
.400	.0	15.250	.0	5.350	.1	10.300	.0
.450	.0	15.300	.0	5.400	.1	10.350	.0
.500	.0	15.350	.0	5.450	.1	10.400	.0
.550	.0	15.400	.0	5.500	.1	10.450	.0
.600	.0	15.450	.0	5.550	.1	10.500	.0
.650	.0	15.500	.0	5.600	.1	10.550	.0

	.700	.0	5.650	.1	10.600
.0	15.550	.0	20.500	.0	
	.750	.0	5.700	.1	10.650
.0	15.600	.0	20.550	.0	
	.800	.0	5.750	.1	10.700
.0	15.650	.0	20.600	.0	
	.850	.0	5.800	.1	10.750
.0	15.700	.0	20.650	.0	
	.900	.0	5.850	.1	10.800
.0	15.750	.0	20.700	.0	
	.950	.0	5.900	.1	10.850
.0	15.800	.0	20.750	.0	
	1.000	.0	5.950	.1	10.900
.0	15.850	.0	20.800	.0	
	1.050	.0	6.000	.1	10.950
.0	15.900	.0	20.850	.0	
	1.100	.0	6.050	.1	11.000
.0	15.950	.0	20.900	.0	
	1.150	.0	6.100	.1	11.050
.0	16.000	.0	20.950	.0	
	1.200	.2	6.150	.1	11.100
.0	16.050	.0	21.000	.0	
	1.250	.9	6.200	.1	11.150
.0	16.100	.0	21.050	.0	
	1.300	2.0	6.250	.1	11.200
.0	16.150	.0	21.100	.0	
	1.350	3.5	6.300	.1	11.250
.0	16.200	.0	21.150	.0	
	1.400	5.6	6.350	.1	11.300
.0	16.250	.0	21.200	.0	
	1.450	8.0	6.400	.1	11.350
.0	16.300	.0	21.250	.0	
	1.500	9.0	6.450	.1	11.400
.0	16.350	.0	21.300	.0	
	1.550	7.9	6.500	.1	11.450
.0	16.400	.0	21.350	.0	
	1.600	6.1	6.550	.1	11.500
.0	16.450	.0	21.400	.0	
	1.650	4.9	6.600	.1	11.550
.0	16.500	.0	21.450	.0	
	1.700	4.1	6.650	.1	11.600
.0	16.550	.0	21.500	.0	
	1.750	3.5	6.700	.1	11.650
.0	16.600	.0	21.550	.0	
	1.800	3.2	6.750	.1	11.700
.0	16.650	.0	21.600	.0	
	1.850	2.8	6.800	.1	11.750
.0	16.700	.0	21.650	.0	
	1.900	2.6	6.850	.1	11.800
.0	16.750	.0	21.700	.0	
	1.950	2.3	6.900	.1	11.850
.0	16.800	.0	21.750	.0	

	2.000	2.1	6.950	.1	11.900
.0	16.850	.0	21.800	.0	
	2.050	1.9	7.000	.1	11.950
.0	16.900	.0	21.850	.0	
	2.100	1.5	7.050	.1	12.000
.0	16.950	.0	21.900	.0	
	2.150	1.0	7.100	.1	12.050
.0	17.000	.0	21.950	.0	
	2.200	.8	7.150	.1	12.100
.0	17.050	.0	22.000	.0	
	2.250	.6	7.200	.1	12.150
.0	17.100	.0	22.050	.0	
	2.300	.5	7.250	.1	12.200
.0	17.150	.0	22.100	.0	
	2.350	.4	7.300	.1	12.250
.0	17.200	.0	22.150	.0	
	2.400	.4	7.350	.1	12.300
.0	17.250	.0	22.200	.0	
	2.450	.3	7.400	.1	12.350
.0	17.300	.0	22.250	.0	
	2.500	.3	7.450	.1	12.400
.0	17.350	.0	22.300	.0	
	2.550	.2	7.500	.1	12.450
.0	17.400	.0	22.350	.0	
	2.600	.2	7.550	.1	12.500
.0	17.450	.0	22.400	.0	
	2.650	.2	7.600	.1	12.550
.0	17.500	.0	22.450	.0	
	2.700	.2	7.650	.1	12.600
.0	17.550	.0	22.500	.0	
	2.750	.2	7.700	.1	12.650
.0	17.600	.0	22.550	.0	
	2.800	.1	7.750	.1	12.700
.0	17.650	.0	22.600	.0	
	2.850	.1	7.800	.1	12.750
.0	17.700	.0	22.650	.0	
	2.900	.1	7.850	.1	12.800
.0	17.750	.0	22.700	.0	
	2.950	.1	7.900	.1	12.850
.0	17.800	.0	22.750	.0	
	3.000	.1	7.950	.1	12.900
.0	17.850	.0	22.800	.0	
	3.050	.1	8.000	.1	12.950
.0	17.900	.0	22.850	.0	
	3.100	.1	8.050	.1	13.000
.0	17.950	.0	22.900	.0	
	3.150	.1	8.100	.1	13.050
.0	18.000	.0	22.950	.0	
	3.200	.1	8.150	.1	13.100
.0	18.050	.0	23.000	.0	
	3.250	.1	8.200	.1	13.150
.0	18.100	.0	23.050	.0	

	3.300	.1	8.250	.1	13.200
.0	18.150	.0	23.100	.0	
	3.350	.1	8.300	.1	13.250
.0	18.200	.0	23.150	.0	
	3.400	.1	8.350	.1	13.300
.0	18.250	.0	23.200	.0	
	3.450	.1	8.400	.1	13.350
.0	18.300	.0	23.250	.0	
	3.500	.1	8.450	.1	13.400
.0	18.350	.0	23.300	.0	
	3.550	.1	8.500	.1	13.450
.0	18.400	.0	23.350	.0	
	3.600	.1	8.550	.1	13.500
.0	18.450	.0	23.400	.0	
	3.650	.1	8.600	.1	13.550
.0	18.500	.0	23.450	.0	
	3.700	.1	8.650	.1	13.600
.0	18.550	.0	23.500	.0	
	3.750	.1	8.700	.1	13.650
.0	18.600	.0	23.550	.0	
	3.800	.1	8.750	.1	13.700
.0	18.650	.0	23.600	.0	
	3.850	.1	8.800	.1	13.750
.0	18.700	.0	23.650	.0	
	3.900	.1	8.850	.1	13.800
.0	18.750	.0	23.700	.0	
	3.950	.1	8.900	.1	13.850
.0	18.800	.0	23.750	.0	
	4.000	.1	8.950	.1	13.900
.0	18.850	.0	23.800	.0	
	4.050	.1	9.000	.1	13.950
.0	18.900	.0	23.850	.0	
	4.100	.1	9.050	.1	14.000
.0	18.950	.0	23.900	.0	
	4.150	.1	9.100	.1	14.050
.0	19.000	.0	23.950	.0	
	4.200	.0	9.150	.1	14.100
.0	19.050	.0	24.000	.0	
	4.250	.0	9.200	.1	14.150
.0	19.100	.0	24.050	.0	
	4.300	.0	9.250	.1	14.200
.0	19.150	.0	24.100	.0	
	4.350	.0	9.300	.1	14.250
.0	19.200	.0	24.150	.0	
	4.400	.0	9.350	.1	14.300
.0	19.250	.0	24.200	.0	
	4.450	.0	9.400	.1	14.350
.0	19.300	.0	24.250	.0	
	4.500	.0	9.450	.1	14.400
.0	19.350	.0	24.300	.0	
	4.550	.0	9.500	.1	14.450
.0	19.400	.0	24.350	.0	

```
                4.600          .0          9.550          .1          14.500
.0               19.450          .0          24.400          .0
                4.650          .0          9.600          .0          14.550
.0               19.500          .0          24.450          .0
                4.700          .0          9.650          .0          14.600
.0               19.550          .0          24.500          .0
                4.750          .0          9.700          .0          14.650
.0               19.600          .0          24.550          .0
                4.800          .0          9.750          .0          14.700
.0               19.650          .0
                4.850          .1          9.800          .0          14.750
.0               19.700          .0
                4.900          .1          9.850          .0          14.800
.0               19.750          .0

          RUNOFF VOLUME =      2.25624 INCHES      =          .3971
ACRE-FEET
          PEAK DISCHARGE RATE =        9.04 CFS   AT    1.500 HOURS
BASIN AREA =    .0033 SQ. MI.


     *
     *
     *
     *
     ADD HYD                ID=6 HYD=Sub1_up ID I=4 ID II=5
     PRINT HYD              ID=6 CODE=1

                                                HYDROGRAPH FROM
AREA Sub1_up


          RUNOFF VOLUME =      1.51340 INCHES      =          .7506
ACRE-FEET
          PEAK DISCHARGE RATE =       10.27 CFS   AT    1.500 HOURS
BASIN AREA =    .0093 SQ. MI.


     *
     *

     FINISH

          NORMAL PROGRAM FINISH           END TIME (HR:MIN:SEC) =
08:50:46
```

City of Albuquerque

December 7, 1999

Scott McGee, P.E.
Isaacson & Arfman
128 Monroe NE
Albuquerque, NM 87108

RE: CHICK'S HARLEY DAVIDSON (C17-D14). ENGINEER's CERTIFICATION FOR CERTIFICATE OF OCCUPANCY APPROVAL. ENGINEER'S STAMP DATED NOVEMBER 22, 1999.

Dear Mr. McGee:

Based on the information provided on your November 23, 1999 submittal, the above referenced project is approved for Certificate of Occupancy.

If I can be of further assistance, please feel free to contact me at 924-3984.

Sincerely,

John P. Murray, P.E.
Hydrology

c: WR
File

THE CITY OF ALBUQUERQUE IS AN EQUAL OPPORTUNITY/REASONABLE ACCOMMODATION EMPLOYER

DRAINAGE INFORMATION SHEET

PROJECT TITLE: CHICK'S HARLEY DAVIDSON ZONE ATLAS/DRNG. FILE #: C-17/D14

DRB #: _____ EPC #: _____ WORK ORDER #: _____

LEGAL DESCRIPTION: TR F-2, LOOP INDUSTRIAL DISTRICT

CITY ADDRESS: WEST OF SAN MATEO 5000 ALAMEDA BLVD NE

ENGINEERING FIRM: IdA CONTACT: SCOTT McGEE

ADDRESS: 128 MONROE NE PHONE: 268-8828

OWNER: CHICK CONTACT: CHICK

ADDRESS: 8207 CENTRAL E PHONE: 266-6777

ARCHITECT: CHERRY SEE CONTACT: JIM SEE

ADDRESS: 220 A GOLD SW PHONE: 842-1278

SURVEYOR: FORSTBAUER SURVEYING CONTACT: RON FORSTBAUER

ADDRESS: 1100 ALVARADO NE PHONE: 268-2112

CONTRACTOR: UNKNOWN CONTACT: _____

ADDRESS: _____ PHONE: _____

RECEIVED
NOV 22 1999
HYDROLOGY SECTION

TYPE OF SUBMITTAL:

___ DRAINAGE REPORT
_X_ DRAINAGE PLAN
___ CONCEPTUAL GRADING & DRAINAGE PLAN
___ GRADING PLAN
___ EROSION CONTROL PLAN
_X_ ENGINEER'S CERTIFICATION
___ OTHER

PRE-DESIGN MEETING:

___ YES
_X_ NO
___ COPY PROVIDED

11/24
30 day

ROVAL SOUGHT:

PPROVAL
AT APPROVAL
OR SUB'D. APPROVAL
PLAN FOR BLDG. PERMIT APPROVAL
___ SECTOR PLAN APPROVAL
___ FINAL PLAT APPROVAL
___ FOUNDATION PERMIT APPROVAL
___ BUILDING PERMIT APPROVAL
_X_ CERTIFICATE OF OCCUPANCY APPROVAL
___ GRADING PERMIT APPROVAL
___ PAVING PERMIT APPROVAL
___ S.A.D. DRAINAGE REPORT
___ DRAINAGE REQUIREMENTS
___ OTHER _____ (SPECIFY)

DATE SUBMITTED: 11-22-99

BY: Scott M McGee

D. MARK GOODWIN & ASSOCIATES, P.A.
CONSULTING ENGINEERS & SURVEYORS

PROJECT Amtech
SUBJECT Drainage
BY MG DATE 10/6/92
CHECKED _____ DATE _____
SHEET 1 OF 7

The existing site discharges to a storm drain system in Jefferson constructed as part of SR0 201. This portion of the storm drain requires controlled discharge to the developed 10 year rate. We will have to pond the difference.

There is also an 8.3 Ac portion of the lot to the east that drains through this site - we will route these flows through. In the future they may discharge the 10 year developed rate also. We will determine both rates to insure capacity for the largest.

ON-SITE

There are 4 internal drainage areas:

D.A. 1 - 1.2 Ac. discharges directly

D.A. 2 - 0.80 Ac. discharges to a drop inlet & is conveyed to pond in front.

D.A. 3 - 4.10 Ac. discharges to drop inlet & conveyed to pond in front.

D.A. 4 - 2.2 Ac. discharges thru curb opening into pond in front

Composite "C"

D.A. 1

Paving	0.79	0.95	0.75
Roofs	0	0.90	0
Landscape	0.41	0.25	0.10
	1.2		0.85

C = 0.71

D. MARK GOODWIN & ASSOCIATES, P.A.
CONSULTING ENGINEERS & SURVEYORS

PROJECT Antech
SUBJECT Drainage
BY MG DATE 10/6/92
CHECKED _____ DATE _____
SHEET 2 OF 7

D.A. 2:

Paving	.80	.95		
Roof	0	.90		C = 0.95
Landscape	0	.25		
	.80			

D.A. 3:

Paving	2.53	0.95	2.40	
Roof	0.76	0.90	0.68	C = 0.80
Landscape	0.81	0.25	0.20	
	4.1		3.28	

D.A. 4:

Paving	0.93	0.95	0.88	
Roof	0.76	0.90	0.68	C = 0.77
Landscape	0.51	0.25	0.13	
	2.2		1.69	

P for all areas = 2.20 in (100 yr) = 2.2(.68) = 1.50 (10 yr.)

T_c for all areas < 10 min.

I = 4.65 in/Hr 100 Year

= 3.16 in/Hr 10 Year

D.A. 1: Q(10) = 2.7 cfs
Q(100) = 4 cfs

D.A. 2: Q(10) = 2.4 cfs
Q(100) = 3.5 cfs

D.A. 3: Q(10) = 10.4 cfs
Q(100) = 15.3 cfs

D.A. 4: Q(10) = 5.4 cfs
Q(100) = 7.9 cfs

Allowable discharge rate = 21 cfs however we are going to discharge D.A. 1 Q(100) = 4 cfs directly, so Q_A = 17 cfs

Ponding Volume REQ'D: using SCS

D.A. 1:

Vol. (10) = .68 (V100) = 4150
Vol. (100) = 1.4 (1.2) = 6100 cu. ft.

D.A. 2:

Vol. (10) = 3357 cu. ft.
Vol. (100) = 1.7 (0.80) = 4957 cu. ft.

D. MARK GOODWIN & ASSOCIATES, P.A.
CONSULTING ENGINEERS & SURVEYORS

PROJECT Amtech
SUBJECT Drainage
BY MG DATE 10/6/92
CHECKED _____ DATE _____
SHEET 4 OF 7

D.A. 3:

Vol. (10) = 14,150 cu. ft.
Vol. (100) = 1.4(4.1) = 20,800 cu. ft.

D.A. 4:

Vol. (10) = 7602 cu. ft.
Vol. (100) = 1.4(2.2) = 11,180 cu. ft.

Since D.A. 1 discharges directly it does not figure in at all.

Vol. (10) Total = 25109 cu. ft.
Vol. (100) Total = 39,917 cu. ft.

Ponding Vol. Reqd = 11,800 cu. ft.
Ponding Vol. Provd. = 14,300 cu. ft.

We now need to calculate the off-site 100 yr undeveloped & the 10 yr Developed to insure we can handle these flows.

Undeveloped

C = 0.40 Bare Ground
P = 2.2 in.
T_c = 10 min.
I = 4.65 in/hr
A = 8.3 Ac
Q(100) = 15 cfs

Developed

C = 0.80 Assumed
P = 1.50 in
I = 3.10 in/hr
Q(10) = 21 cfs

We need to insure that we have capacity in landscaped swale for 21 cfs

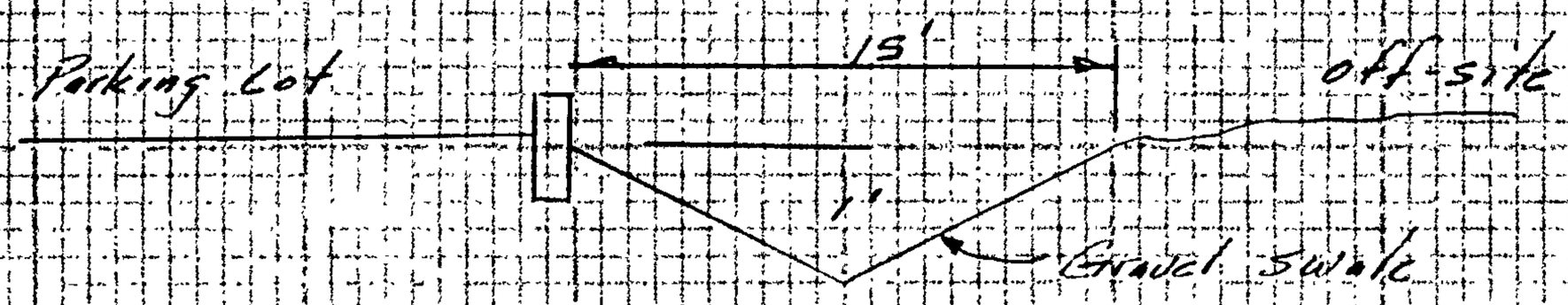

n = 0.035 S = 2% ± A = 15 ft² W/P = 30.07'

V = 2.12 fps → Q = AV = 32 cfs > 21 cfs O.K.

We now need to size Type "D" Drop Inlets.

O.A. 2

Q(100) = 3.5 cfs

Allowable H = 0.5' Sump condition

From Attached Nomograph:

A single "D" is required

O.A. 3:

Q(100) = 15 cfs → we need a double "D"

We now need to size connector pipes

from O.A. 2 to O.A. 3 for Q = 3.5 cfs S = 0.5%

Pipe ϕ = 15"

from O.A. 3 to Pond Q = 19 cfs S = 0.50%

Pipe ϕ = 24"

D. MARK GOODWIN & ASSOCIATES, P.A.
CONSULTING ENGINEERS & SURVEYORS

PROJECT Amtech
SUBJECT Drainage
BY MG DATE 10/8/92
CHECKED _____ DATE _____
SHEET 7 OF 7

We now need to size principal outlet for $Q_4 = 17$ cfs. This outlet will act as an orifice.

$$Q = CA\sqrt{2gH}$$

$H = 2'$

$C = 0.8$

using 18" → $A = 1.77$ #

$Q = 10$ cfs close enough

Need to size Emergency Spillway weir

$$Q = CLH^{3/2}$$

$$L = \frac{Q}{CH^{3/2}} = \frac{27}{2.9(1.5)^{3/2}} = 26'$$

CITY OF ALBUQUERQUE
PLANNING DEPARTMENT
DEVELOPMENT SERVICE / HYDROLOGY SECTION

DATE: 8-23-11

CONFERENCE RECAP

ZONE ATLAS PAGE NO: C17
DRAINAGE FILE: C17/D014C
ZONING:
DRB:
SUBJECT:
STREET ADDRESS (IF KNOWN):
SUBDIVISION NAME:

APPROVAL REQUESTED:

ATTENDANCE: Chuck Easterling Curtis Cherne

FINDINGS:

1. site currently can can discharge 0.93 cfs to the existing rundown to the west.
2. Keep current discharge rate of 2.3 cfs/ac
3. provide offsite flows from the east.

THE UNDERSIGNED AGREES THAT THE ABOVE FINDINGS ARE SUMMARIZED ACCURATELY AND ARE SUBJECT TO CHANGE IF FURTHER INVESTIGATION REVEALS THAT THEY ARE NOT REASONABLE OR THAT THEY ARE BASED ON INACCURATE INFORMATION.

SIGNED: Curtis A. Cherne
NAME (PRINT): Curtis A. Cherne

SIGNED:
NAME (PRINT): CHUCK EASTERLING

NOTE PLEASE PROVIDE A COPY OF THIS RECAP WITH YOUR DRAINAGE SUBMITTAL.

RECEIVED
OCT 6 2011
HYDROLOGY

6-15-11
Spoke with Fred
no new
SD in
Alameda So
still require
detention.
a

GENERAL NOTES

LEGAL DESCRIPTION: TRACT F-2, LOOP INDUSTRIAL DISTRICT SUBDIVISION

AREA: 2.6044 ACRES (113,447 SF)

BENCHMARK(S): CITY OF ALBUQUERQUE NDC 7; AN AMAFCA BRASS CAP LOCATED AT THE SW CORNER OF ALAMEDA BLVD BRIDGE OVER THE NORTH DIVERSION CHANNEL.
ELEV = 5082.80

TEMPORARY BM: SE BONNET BOLT OF FIRE HYDRANT AT NE CORNER OF SITE.
ELEV = 5144.61

SURVEYS: BOUNDRY & TOPOGRAPHIC SURVEYS BY RON FORSTBAUER, NOVEMBER 15,1994

FLOOD HAZARD STATEMENT: AS SHOWN ON PANEL 9 OF THE FIRM, THIS SITE IS NOT WITHIN A DEFINED FLOOD HAZARD AREA. ALAMEDA BLVD IS WITHIN A FLOOD ZONE (DEPTH: 1) & THE FEMA FLOOD MAP DOES NOT REFLECT THE STORM DRAIN CONSTRUCTED IN 1983.

SOILS: THE SCS BERNALILLO COUNTY SOIL SURVEY LISTS THIS EMBUDO-TUERAS GRAVELLY FINE SANDY LOAM AS A HYDROLOGIC GROUP 'B' SOIL.

OFFSITE FLOW: THE SITE ACCEPTS RUNOFF FROM A PORTION OF THE ADJACENT UNDEVELOPED TRACT E-2-A.

$Q_{100} = (2.83)(1.56) = 4.4$ CFS
$Q_{10} = (2.83)(0.38) = 1.1$ CFS
$V_{100} = (2.83)(.0442) = .125$ AC-FT = 5,450 CF

HYDROLOGIC ZONE: 2

EXISTING CONDITIONS: UNDEVELOPED LAND SLOPING FROM EAST TO WEST AT 2-3 PERCENT

$Q_{100} = (2.60)(1.56) = 4.1$ CFS
$Q_{10} = (2.60)(0.38) = 1.0$ CFS

PROPOSED CONDITIONS: THE PROPOSED MOTORCYCLE DEALERSHIP IS A 21,500 SF BUILDING WITH ASSOCIATED PAVED PARKING AND LANDSCAPING. RUNOFF WILL BE DIRECTED TO THE WEST SIDE OF THE BUILDING WHERE IT WILL BE CARRIED VIA A 10-INCH STORM DRAIN INTO THE BACK OF AN EXISTING DOUBLE 'A' CATCH BASIN IN ALAMEDA BLVD NE.

LAND TREATMENT: 12 % A 8 % B 15 % C 65 % D

$Q_{100} = (0.31)(1.56) + (0.21)(2.28) + (0.39)(3.14) + (1.69)(4.70)$
$Q_{100} = 10.1$ CFS
$Q_{10} = (0.31)(0.38) + (0.21)(0.95) + (0.39)(1.71) + (1.69)(3.14)$
$Q_{10} = 6.3$ CFS

$V_{100} = (0.31)(.0442) + (0.21)(.0650) + (0.39)(.0942) + (1.69)(.1787)$
$V_{100} = 0.383$ AC-FT = 15,800 CF

TOTAL Q_{100} = OFFSITE + ONSITE = 4.4 + 10.1 = 15.5 CFS

TOTAL V_{100} = 21,250 CF

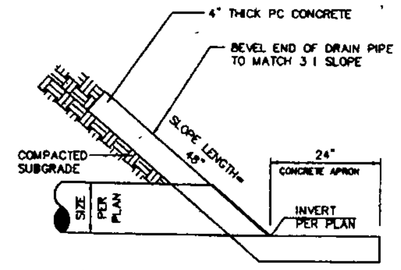

PROFILE VIEW
NTS

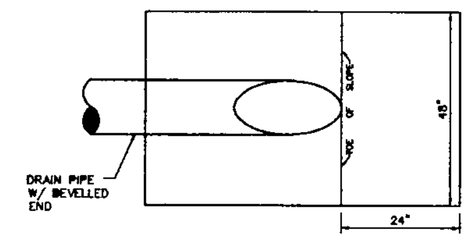

PLAN VIEW
NTS

INLET/OUTLET DETAIL
NTS

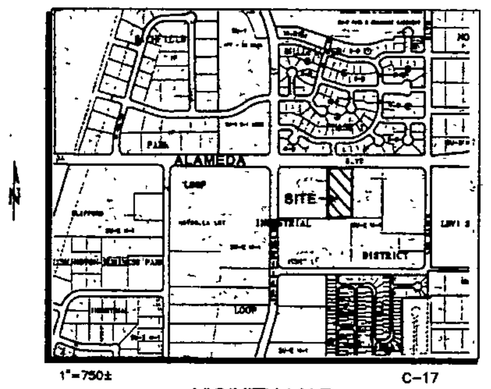

VICINITY MAP

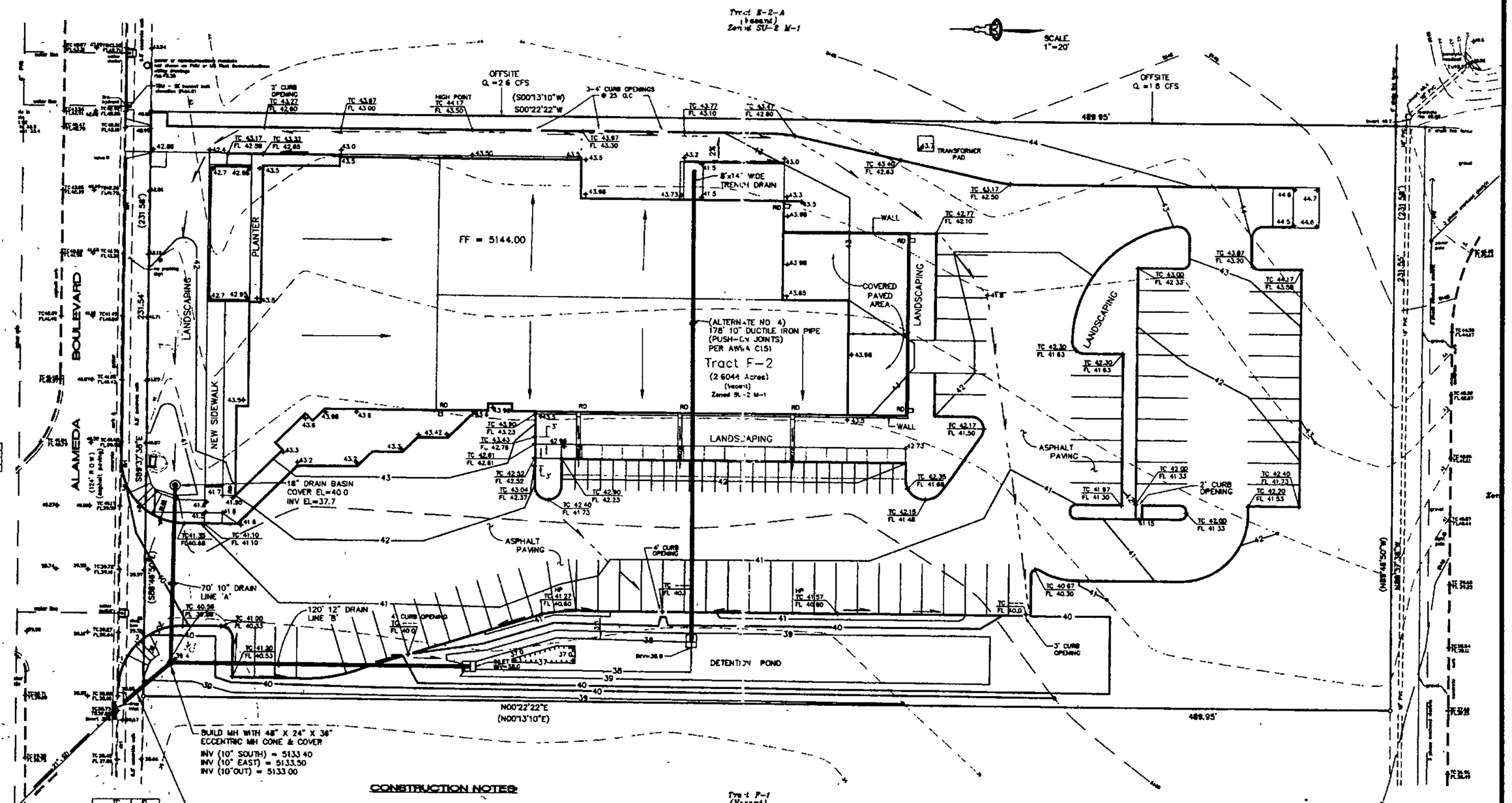

1	43.15	46.48
2	—	45.34
3	42.79	42.08

1	38.32	38.32
2	—	38.00
3	40.11	38.44

PUBLIC FLOW CONSTRUCTION NOTES

1. ALL WORK DETAILED ON THESE PLANS TO BE PERFORMED UNDER THIS CONTRACT SHALL EXCEPT AS OTHERWISE STATED OR PROVIDED FOR HEREIN, BE CONSTRUCTED IN ACCORDANCE WITH "CITY OF ALBUQUERQUE STANDARD SPECIFICATIONS PUBLIC WORKS CONSTRUCTION, 1986".
2. TWO (2) WORKING DAYS PRIOR TO ANY EXCAVATION, CONTRACTOR SHALL CONTACT LINE LOCATING SERVICE, 260-1990, FOR LOCATION OF EXISTING LINES.
3. PRIOR TO CONSTRUCTION THE CONTRACTOR SHALL EXCAVATE AND VERIFY THE HORIZONTAL AND VERTICAL LOCATIONS OF ALL OBSTRUCTIONS SHOULD A CONFLICT EXIST, THE CONTRACTOR SHALL NOTIFY THE ENGINEER-OR SURVEYOR SO THAT THE CONFLICT CAN BE RESOLVED WITH A MINIMUM OF DELAY
4. BACKFILL COMPACTION SHALL BE ACCORDING TO SPECIFIED STREET-USE (ARTERIAL)
5. MAINTENANCE OF THESE FACILITIES SHALL BE THE RESPONSIBILITY OF THE OWNER OF THE PROPERTY SERVED
6. AN EXCAVATION/CONSTRUCTION PERMIT WILL BE REQUIRED BEFORE BEGINNING ANY WORK WITHIN CITY RIGHT-OF-WAY. AN APPROVED COPY OF THESE PLANS MUST BE SUBMITTED AT THE TIME OF APPLICATION FOR THIS PERMIT

APPROVALS	NAME	DATE
HYDROLOGY		
INSPECTOR		
A.C.E./FIELD		
PERMIT NO.	MAP NO C-17	

CONSTRUCTION NOTES

1) DRAIN LINES 'A' & 'B' SHALL BE ADS CORRUGATED HDPE PIPE OR APPROVED EQUAL.
2) CONTRACTOR SHALL SECURE A 'TOPSOIL DISTURBANCE PERMIT' FROM THE CITY ENVIRONMENTAL HEALTH DEPT PRIOR TO BEGINNING CONSTRUCTION
3) AN EXCAVATION PERMIT IS REQUIRED FOR ALL WORK WITHIN PUBLIC R/W
4) 18" ROUND DRAIN BASIN SHALL BE SQUARE BODY TYPE BY NYLOPLAST, INC WITH CAST IRON GRATE & PVC BODY WITH 10" OUTLET AVAILABLE THROUGH ADS, FORT COLLINS, CO (CONTACT JIM HEINTZ AT 1(800) 733-7233.
5) GRADING PLAN REFLECTS LOADING DOCK ALTERNATE IF NOT AWARDED, THIS AREA SHALL BE PAVED SMOOTHLY TO SPOT ELEVATIONS & CONTOURS SHOWN

POND DATA

CONTOUR	AREA (SF)	CUMULATIVE DEPTH (FT)	CUMULATIVE VOLUME (CF)
37	180	0	0
38	900	1	540
39	3700	2	2840
40	8600	3	7980

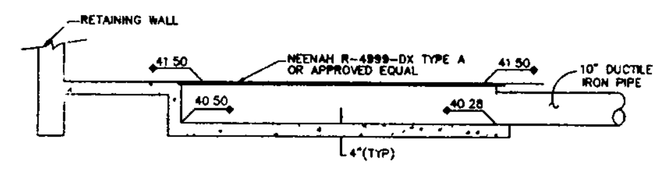

TRENCH DRAIN SECTION
1"=2'
(ALTERNATE NO 4)

LEGEND

5147	EXISTING CONTOUR
42	PROPOSED CONTOUR
+42.0	PROPOSED SPOT ELEVATION
	FLOW ARROW
INV = 38.2	INVERT ELEVATION
TC 40.5 FL 40.0	TOP OF CURB FLOWLINE ELEVATION
FF=5144.00	FINISH FLOOR ELEVATION
HP	HIGH POINT
RD	ROOF DRAIN LOCATION

ARCHITECT
ENGINEER

EDITH CHERRY / D. JAMES SEE ARCHITECTS
220 A GOLD AVE. SW., ALBUQUERQUE, NEW MEXICO, 87102 505 842 1278

TITLE OF SHEET
GRADING & DRAINAGE PLAN
1"=20'-0"

DATE
03/31/95

REVISIONS

847GRD.DWGsede

SHEET NUMBER
C-1
OF
42

CITY OF ALBUQUERQUE
PLANNING DEPARTMENT
DEVELOPMENT SERVICE / HYDROLOGY SECTION

DATE: 8-23-11
CONFERENCE RECAP

ZONE ATLAS PAGE NO: C17
DRAINAGE FILE: C17/D014C
ZONING:
DRB:
SUBJECT:
STREET ADDRESS (IF KNOWN):
SUBDIVISION NAME:
APPROVAL REQUESTED:
ATTENDANCE: Chuck Easterling Curtis Cherne

FINDINGS:

1. site currently onsite can discharge 0.93 cfs to the existing rundown to the west.
2. Keep current discharge rate of 2.3 cfs/ac
3. provide offsite flows from the east.

THE UNDERSIGNED AGREES THAT THE ABOVE FINDINGS ARE SUMMARIZED ACCURATELY AND ARE SUBJECT TO CHANGE IF FURTHER INVESTIGATION REVEALS THAT THEY ARE NOT REASONABLE OR THAT THEY ARE BASED ON INACCURATE INFORMATION.

SIGNED: Curtis A. Cherne
NAME (PRINT): Curtis A. Cherne

SIGNED:
NAME (PRINT): CHUCK EASTERLING

NOTE PLEASE PROVIDE A COPY OF THIS RECAP WITH YOUR DRAINAGE SUBMITTAL.

ISAACSON & ARFMAN, P.A.

Consulting Engineering Associates

Thomas O. Isaacson, PE & LS • Fred C. Arfman, PE
Scott M. McGee, PE

March 29, 1995

Ms. Susan Calongne, P.E.
Hydrology Division/P.W.D.
City of Albuquerque
P.O. Box 1293
Albuquerque, NM 87103

RE: Chick's Harley Davidson (C17/D14C)

Dear Ms. Calongne:

The Grading and Drainage Plan has been revised for the referenced project. Your review comments of March 23rd have been addressed as follows:

1. The floodplain note has been revised and the finish floor has been raised to 5144.

2. An "Offsite Flow Exhibit" has been enclosed which shows the limits of the offsite basins. Proposed Q_{100} has been clarified to show developed flow rate and offsite flows which are accepted onsite. The existing 18-inch storm drain pipe (shown on the adjacent tract), does not discharge to this site, but continues west to a discharge point in Jefferson Street NE.

3. The 30"-78" storm drain in Alameda Blvd. NE was built in 1983 as part of SAD No. 201. Design discharge (see attached calculations) was approximately 2.3 cfs/acre based on assumed 78% impervious land treatment and the "old" hydrology. Storm drain capacity (based on gravity flow) at the manhole where proposed flows enter is 111.7 cfs from record drawings. The detention pond controls discharge to an allowable flow rate as given by SAD No. 21. A second pond function is for possible water quality testing requirements not currently required.

Please call me if you have any additional comments.

Very truly yours,

ISAACSON & ARFMAN, P.A.

Scott M McGee

Scott M. McGee, P.E.

SMM/rtl
Enclosures

APR 10 1995

128 Monroe St. NE • Albuquerque, NM 87108 • (505) 268-8828 • FAX (505) 268-2632

CHICK'S HARLEY DAVIDSON
OFFSITE FLOW EXHIBIT

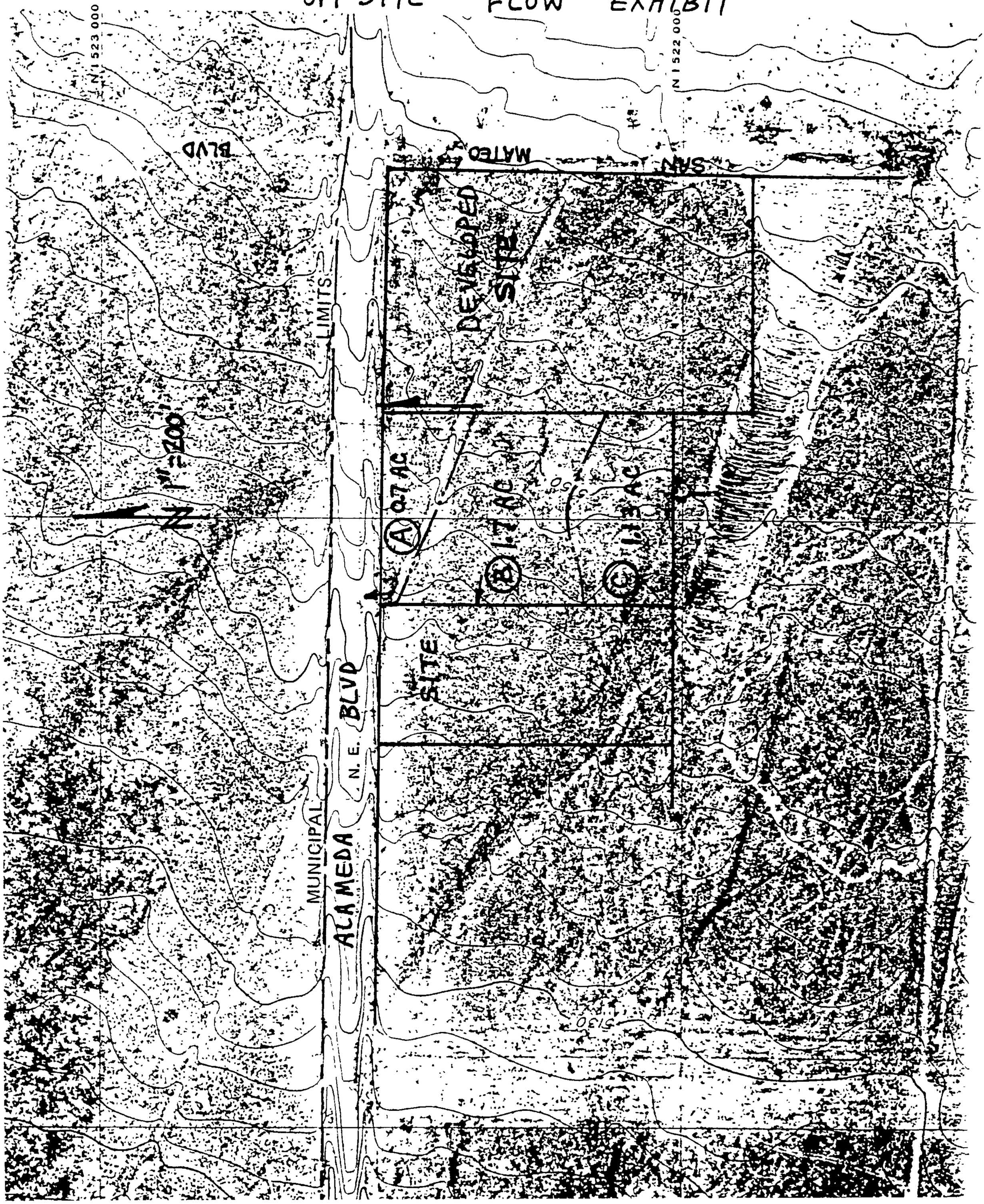

OFFSITE PARCEL : E-2-A

$$AREA = \frac{(313.85 \times 489.95)}{43{,}560\ SF/AC} = 3.530\ AC$$

AREA (AC)	BASIN ○	Q_{100} (CFS)	COMMENTS
0.70	A	1.1	DISHARGES TO ALAMEDA
1.70	B	2.6 *	ACCEPTED ONSITE
1.13	C	1.8 *	ACCEPTED ONSITE
		5.5 CFS	

AT TIME OF DEVELOPMENT OF TRACT E-2-A, IT IS ANTICIPATED THAT DEVELOPED RUNOFF WILL BE DIRECTED TO ALAMEDA BLVD. & RUNOFF TO THIS SITE WILL BE GREATLY REDUCED.

* OFFSITE FLOW = 2.6 + 1.8 = 4.4 CFS (ACCEPTED ONSITE)
OFF SITE FLOWS ACCEPTED ONSITE ARE ROUTED AROUND THE BUILDING TO THE DETENTION POND. ✓

SAD #201 INSTALLED THE 30" - 78" STORM DRAIN IN ALAMEDA (RICHFIELD) IN 1983. DEVELOPED CONDITIONS ("C" = 0.75 FOR 78% IMPERVIOUS) WERE ASSUMED WHICH GAVE A UNIT DISCHARGE OF $Q_{1.0\,AC} = (0.75)(3.06)1.00\,AC = 2.29\,CFS/AC$

THIS SITE'S DISCHARGE WILL THEN BE THE OFFSITE FLOW (ACCEPTED ONSITE: Q = 4.4 CFS) & THE ALLOWABLE DEVELOPED DISCHARGE AT 2.29 CFS/AC.

$$\text{ALLOWABLE } Q = 4.4\,CFS + (2.29\,CFS/AC)(2.6044\,AC)$$

$$Q = 4.4 + 5.9 = \underline{\underline{10.3\,CFS}}$$

SAD #201 DESIGN CRITERIA INCLUDED:

" 2 a) INDIVIDUAL TRACTS REQUIRED TO DESIGN FOR CONTROLLED DISCHARGE (10-YR FLOW) TO BACK OF STREET INLETS WHEREVER AN INLET IS AVAILABLE. "

THE CONNECTOR PIPE WAS OVERSIZED (21" ϕ) IN ANTICIPATION OF A FUTURE TIE-IN.

APR 10 1995

$t_c = 12$ MINS $\qquad t_p = 0.7\,t_c + 8 - 5\left(\frac{A_D}{A_T}\right) = (0.7)(12) + 8 - 5\left(\frac{1.69}{5.434}\right) = 14.8$ MIN

$t_b = 121E\left(\frac{A_T}{Q_P}\right) - 15\left(\frac{A_D}{A_T}\right) = (121)(1.077)\left(\frac{5.4344}{15.5}\right) - 15\left(\frac{1.69}{5.434}\right) = 41.0$ MIN

Peak time $= 15\left(\frac{A_D}{A_T}\right) = 15\left(\frac{1.69}{5.434}\right) = 4.66$ MIN

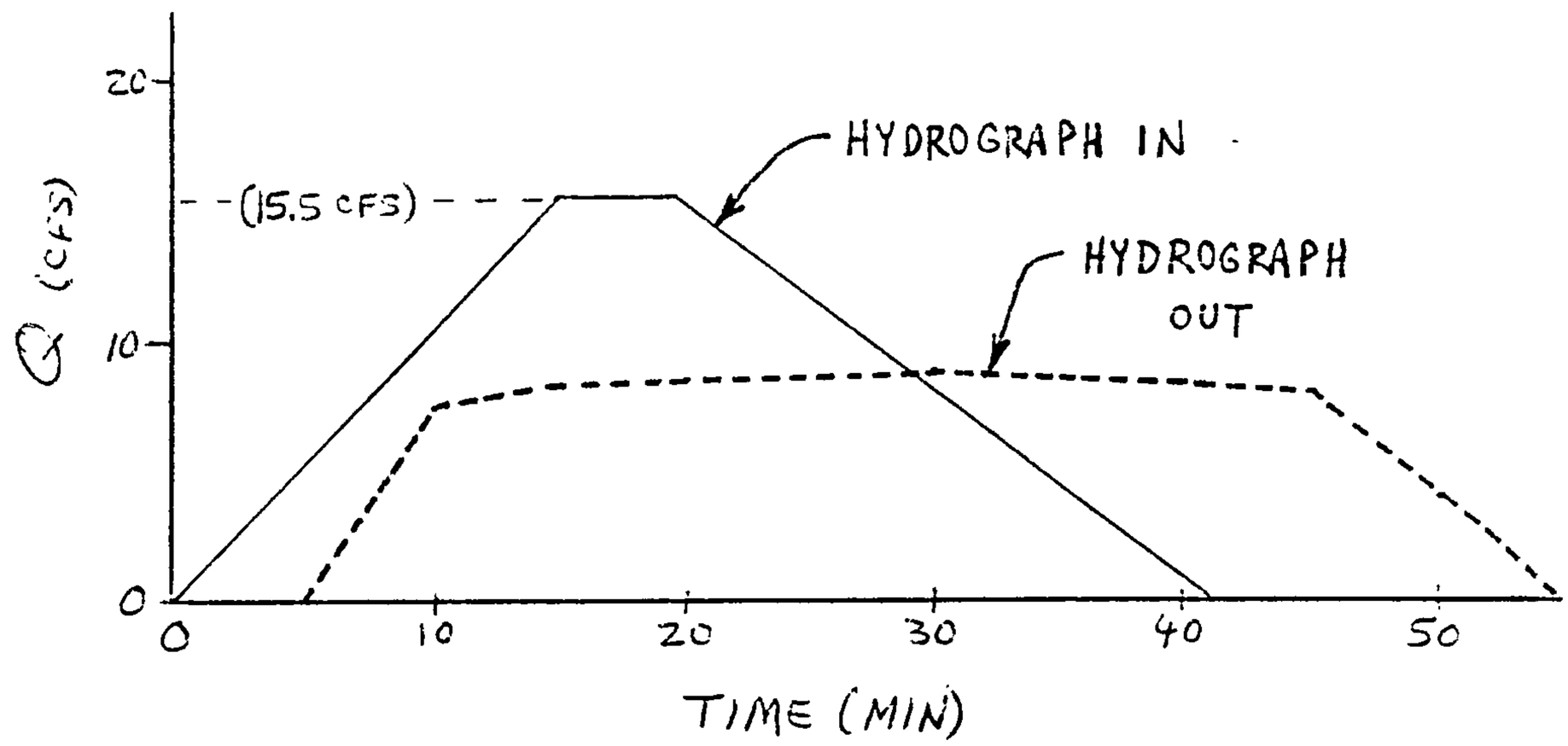

TIME (MIN)	Q_{IN} (CFS)	Q_{OUT} (CFS)	VOL (CF)	DEPTH (FT) (ABOVE 38.0 INV)
0	0	0	0	0
5	5.2	0	780	0.3
10	10.3	7.5	2000	0.8
15	15.5	8.3	3500	1.2
20	15.5	8.6	5600	1.6
25	11.9	8.8	7100	1.8
30	7.9	8.9	7400	1.9
35	4.3	8.7	6600	1.7
40	0.7	8.5	4800	1.5
45	0	8.1	2450	1.0

City of Albuquerque
P.O. BOX 1293 ALBUQUERQUE, NEW MEXICO 87103

2 February, 1999

Scott McGee
Isaacson & Arfman
128 Monroe NE
Albuquerque, NM 87108

RE: CHICK'S HARLEY DAVIDSON (C17-D14C). GRADING & DRAINAGE PLAN SUBMITTAL FOR BUILDING PERMIT APPROVAL.
Engineer's Stamp Dated 1-25-99

Dear Mr. McGee:

Based upon the information provided on your 1-25-99 submittal, the referenced project is approved for Building Permit.

You will be required to submit an Engineer's Certification for Certificate of Occupancy.

If I can be of further assistance, please feel free to contact me at 924-3986.

Sincerely,

Scott Davis
PWD, Hydrology Div.

c: Andrew Garcia
file

THE CITY OF ALBUQUERQUE IS AN EQUAL OPPORTUNITY/REASONABLE ACCOMMODATION EMPLOYER

October 29, 1996

Albuquerque

Martin J. Chávez, Mayor

Scott McGee
Isaacson & Arfman
128 Monroe NE
Albuquerque, NM 87108

RE: CHICK'S HARLEY DAVIDSON (C17-D14C). GRADING PLAN FOR BUILDING PERMIT AND PAVING PERMIT APPROVALS. ENGINEER'S STAMP DATED OCTOBER 21, 1996.

Dear Mr McGee:

Based on the information provided on your October 23, 1996 submittal, the above referenced project is approved for Building Permit. Building Permit is all that is required for this project. A Building Permit encompasses paving.

You will be required to submit an Engineer's Certification for Certificate of Occupancy.

If I can be of further assistance, please feel free to contact me at 768-3622.

Sincerely,

Lisa Ann Manwill
Engineering Assoc./Hyd.

c: Andrew Garcia
File

CITY OF
Albuquerque

October 16, 1996

Martin J. Chávez, Mayor

Scott McGee
Isaacson & Arfman
128 Monroe NE
Albuquerque, NM 87108

RE: CHICK'S HARLEY DAVIDSON (C17-D14C). GRADING PLAN FOR BUILDING PERMIT AND PAVING PERMIT APPROVALS. ENGINEER'S STAMP DATED OCTOBER 9, 1996.

Dear Mr McGee:

Based on the information provided on your October 7, 1996 submittal, the above referenced project is approved for Paving Permit. Prior to Building Permit, please address the following comments:

1. Show the finish floor of the proposed building addition to mean sea level.

2. Provide more spot elevation adjacent to the proposed addition and for the two slabs south of the building.

3. A brief narrative (a few sentences) could greatly expedite my review. Discuss the increase in pond size. I assume the pond is large enough, however, you need to state this.

4. Our records indicate that this project never received a Certificate of Occupancy. Apparently, no "green tag" was submitted for the tie in to the back of the existing inlet on Alameda. Please provide the necessary documentation so that the City can issue the Certificate of Occupancy.

You will be required to submit an Engineer's Certification for the paving portion of this project.

If I can be of further assistance, please feel free to contact me at 768-3622.

Sincerely,

Lisa Ann Manwill
Engineering Assoc./Hyd.

c: Andrew Garcia
File

ISAACSON & ARFMAN, P.A.

Consulting Engineering Associates

Thomas O. Isaacson, PE & LS • Fred C. Arfman, PE
Scott M. McGee, PE

October 21, 1996

Ms. Lisa Ann Manwill
Hydrology Division
Public Works Department
City of Albuquerque
P.O. Box 1293
Albuquerque, NM 87103

RE: Chick's Harley Davidson (C-17/D14C)

Dear Lisa:

The revised plan enclosed addresses your October 16th comments as follows:

1. *Show the finish floor of the proposed building addition to mean sea level.*

   The proposed building addition involves "walling-in" an area that is currently covered and asphalt paved (shown with cross-hatch and noted on the drawing). The existing sloped asphalt surface will remain as shown by contour and spot elevation.

2. *Provide more spot elevation adjacent to the proposed addition and for the two slabs south of the building.*

   Additional spot elevations have been added where the two asphalt paved areas are proposed immediately south of the area discussed in 1. above.

3. *A brief narrative (a few sentences) could greatly expedite my review. Discuss the increase in pond size. I assume the pond is large enough, however, you need to state this.*

   The pond has been enlarged by approximately 500 cubic feet, which will handle the increased runoff volume.

OCT 2 3
HYDROLOGY DIVISION

128 Monroe St. NE • Albuquerque, NM 87108 • (505) 268-8828 • FAX (505) 268-2632

4. *Our records indicate that this project never received a Certificate of Occupancy. Apparently, no "green tag" was submitted for the tie in to the back of the existing inlet on Alameda. Please provide the necessary documentation so that the City can issue the Certificate of Occupancy.*

   I have discussed this with Mr. Jim See, project architect, and I understand that he has submitted a copy of the Certificate of Occupancy issued for the original building.

Please call me if you have any additional questions.

Very truly yours,

ISAACSON & ARFMAN, P.A.

Scott M McGee

Scott M. McGee, P.E.

SMM/rtl

DRAINAGE INFORMATION SHEET

PROJECT TITLE: CHICK'S HARLEY DAVIDSON ZONE ATLAS/DRNG. FILE #: C-17/D14C

DRB #: _____ EPC #: _____ WORK ORDER #: _____

LEGAL DESCRIPTION: TR F-2, LOOP INDUSTRIAL DISTRICT

CITY ADDRESS: (WEST OF SAN MATEO) 5000 ALAMEDA BLVD NE

ENGINEERING FIRM: I&A CONTACT: SCOTT McGEE

ADDRESS: 128 MONROE NE PHONE: 268-8828

OWNER: CHICK CONTACT: CHICK

ADDRESS: 8207 CENTRAL NE PHONE: 266-6777

ARCHITECT: CHERRY SEE CONTACT: JIM SEE

ADDRESS: 220 A GOLD SW PHONE: 842-1278

SURVEYOR: FORSTBAUER SURVEYING CONTACT: RON FORSTBAUER

ADDRESS: 1100 ALVARADO NE PHONE: 268-2112

CONTRACTOR: UNKNOWN CONTACT: _____

ADDRESS: _____ PHONE: _____

TYPE OF SUBMITTAL:

____ DRAINAGE REPORT
X DRAINAGE PLAN
____ CONCEPTUAL GRADING & DRAINAGE PLAN
X GRADING PLAN
____ EROSION CONTROL PLAN
____ ENGINEER'S CERTIFICATION
____ OTHER

PRE-DESIGN MEETING:

____ YES
X NO
____ COPY PROVIDED

CHECK TYPE OF APPROVAL SOUGHT:

____ SKETCH PLAT APPROVAL
____ PRELIMINARY PLAT APPROVAL
____ S. DEV. PLAN FOR SUB'D. APPROVAL
____ S. DEV. PLAN FOR BLDG. PERMIT APPROVAL
____ SECTOR PLAN APPROVAL
____ FINAL PLAT APPROVAL
____ FOUNDATION PERMIT APPROVAL
X BUILDING PERMIT APPROVAL
____ CERTIFICATE OF OCCUPANCY APPROVAL
____ GRADING PERMIT APPROVAL
____ PAVING PERMIT APPROVAL
____ S.A.D. DRAINAGE REPORT
____ DRAINAGE REQUIREMENTS
____ OTHER _____ (SPECIFY)

DATE SUBMITTED: 1-25-99

BY: Scott M McGee

City of Albuquerque
P.O. BOX 1293 ALBUQUERQUE, NEW MEXICO 87103

February 22, 1996

Scott McGee, P.E.
Isaacson & Arfman, P.A.
128 Monroe Street NE
Albuquerque, NM 87108

RE: GRADING AND DRAINAGE PLAN FOR CHICK'S HARLEY DAVIDSON (C17/D14C), ENGINEER'S STAMP DATED 3/31/95

Dear Mr. McGee:

Based on the information provided in the above referenced submittal, the plan for Chick's Harley Davidson is approved for Building Permit Release.

A separate permit is required for construction within City Right-of-Way. A copy of this approval letter must be on hand when applying for the excavation permit.

Please be advised that prior to release of the Certificate of Occupancy, the Engineer's Certification, per the D.P.M. checklist, must be submitted to and approved by this office.

If you should have any questions, please do not hesitate to call me at 768-2666.

Sincerely,

Susan Calongne

Susan M. Calongne, P.E. M. Calongne, P.E.
City/County Floodplain Administrator

c: Andrew Garcia, City Hydrology
Arlene Portillo
File

THE CITY OF ALBUQUERQUE IS AN EQUAL OPPORTUNITY/REASONABLE ACCOMMODATION EMPLOYER

City of Albuquerque
P.O. BOX 1293 ALBUQUERQUE, NEW MEXICO 87103

February 15, 1996

Scott McGee, P.E.
Isaacson & Arfman, P.A.
128 Monroe Street NE
Albuquerque, NM 87108

RE: ENGINEER'S CERTIFICATION FOR CHICK'S HARLEY DAVIDSON ON ALAMEDA BLVD., (C17/D14C) SUBMITTED FOR CERTIFICATE OF OCCUPANCY RELEASE, ENGINEER'S STAMP DATED 1/8/96.

Dear Mr. McGee:

Prior to the City releasing the Certificate for Occupancy for the above referenced project, a green tag or an approval signature is required for the S.O. 19 work. Therefore, the above referenced plan is not approved until the signature or tag is provided to my office with the resubmittal of the certification plan.

If you have any questions, please do not hesitate to call me at 768-2666.

Sincerely,

Susan Calongne

Susan M. Calongne, P.E.
City/County Floodplain Administrator

c: Andrew Garcia, City Hydrology
File

THE CITY OF ALBUQUERQUE IS AN EQUAL OPPORTUNITY/REASONABLE ACCOMMODATION EMPLOYER

City of Albuquerque
P.O. BOX 1293 ALBUQUERQUE, NEW MEXICO 87103

April 20, 1995

Scott McGee, P.E.
Isaacson & Arfman, P.A.
128 Monroe Street NE
Albuquerque, NM 87108

RE: GRADING AND DRAINAGE PLAN FOR CHICK'S HARLEY DAVIDSON (C17/D14C), SUBMITTED FOR BUILDING PERMIT APPROVAL, ENGINEER'S STAMP DATED 3/31/95

Dear Mr. McGee:

Based on the information provided in the above referenced submittal, the plan for Chick's Harley Davidson is approved for Building Permit Release.

Please be advised that prior to release of the Certificate of Occupancy, the Engineer's Certification, per the D.P.M. checklist, must be submitted to and approved by this office.

If you should have any questions, please do not hesitate to call me at 768-2666.

Sincerely,

Susan Calongne

Susan M. Calongne, P.E.
City/County Floodplain Administrator

c: Andrew Garcia, City Hydrology
File

THE CITY OF ALBUQUERQUE IS AN EQUAL OPPORTUNITY/REASONABLE ACCOMMODATION EMPLOYER

DRAINAGE INFORMATION SHEET

PROJECT TITLE: CHICK'S HARLEY DAVIDSON ZONE ATLAS/DRNG. FILE #: C-17 / D14C

DRB #: _____ EPC #: _____ WORK ORDER #: _____

LEGAL DESCRIPTION: TR F-2, LOOP INDUSTRIAL DISTRICT

CITY ADDRESS: WEST OF SAN MATEO - SOUTH SIDE OF ALAMEDA BLVD

ENGINEERING FIRM: I&A CONTACT: SCOTT MCGEE

ADDRESS: 128 MONROE NE PHONE: 268-8828

OWNER: CHICK CONTACT: CHICK

ADDRESS: 8207 CENTRAL NE PHONE: 266-6777

ARCHITECT: CHERRY SEE CONTACT: JIM SEE

ADDRESS: 220 A GOLD SW PHONE: 842-1278

SURVEYOR: FORSTBAUER SURVEYING CONTACT: RON FORSTBAUER

ADDRESS: 1100 ALVARADO NE PHONE: 268-2112

CONTRACTOR: UNKNOWN CONTACT: _____

ADDRESS: _____ PHONE: _____

TYPE OF SUBMITTAL:

____ DRAINAGE REPORT
X DRAINAGE PLAN
____ CONCEPTUAL GRADING & DRAINAGE PLAN
X GRADING PLAN
____ EROSION CONTROL PLAN
____ ENGINEER'S CERTIFICATION
____ OTHER

PRE-DESIGN MEETING:

____ YES
X NO
____ COPY PROVIDED

CHECK TYPE OF APPROVAL SOUGHT:

____ SKETCH PLAT APPROVAL
____ PRELIMINARY PLAT APPROVAL
____ S. DEV. PLAN FOR SUB'D. APPROVAL
____ S. DEV. PLAN FOR BLDG. PERMIT APPROVAL
____ SECTOR PLAN APPROVAL
____ FINAL PLAT APPROVAL
____ FOUNDATION PERMIT APPROVAL
X BUILDING PERMIT APPROVAL
____ CERTIFICATE OF OCCUPANCY APPROVAL
____ GRADING PERMIT APPROVAL
____ PAVING PERMIT APPROVAL
____ S.A.D. DRAINAGE REPORT
____ DRAINAGE REQUIREMENTS
____ OTHER _____ (SPECIFY)

DATE SUBMITTED: 3/31/95

BY: Scott M McGee

APR 10 1995
HYDROLOG

ISAACSON & ARFMAN, P.A.

Consulting Engineering Associates

Thomas O. Isaacson, PE & LS • Fred C. Arfman, PE
Scott M. McGee, PE

March 29, 1995

Ms. Susan Calongne, P.E.
Hydrology Division/P.W.D.
City of Albuquerque
P.O. Box 1293
Albuquerque, NM 87103

RE: Chick's Harley Davidson (C17/D14C)

Dear Ms. Calongne:

The Grading and Drainage Plan has been revised for the referenced project. Your review comments of March 23rd have been addressed as follows:

1. The floodplain note has been revised and the finish floor has been raised to 5144.

2. An "Offsite Flow Exhibit" has been enclosed which shows the limits of the offsite basins. Proposed Q_{100} has been clarified to show developed flow rate and offsite flows which are accepted onsite. The existing 18-inch storm drain pipe (shown on the adjacent tract), does not discharge to this site, but continues west to a discharge point in Jefferson Street NE.

3. The 30"-78" storm drain in Alameda Blvd. NE was built in 1983 as part of SAD No. 201. Design discharge (see attached calculations) was approximately 2.3 cfs/acre based on assumed 78% impervious land treatment and the "old" hydrology. Storm drain capacity (based on gravity flow) at the manhole where proposed flows enter is 111.7 cfs from record drawings. The detention pond controls discharge to an allowable flow rate as given by SAD No. 21. A second pond function is for possible water quality testing requirements not currently required.

Please call me if you have any additional comments.

Very truly yours,

ISAACSON & ARFMAN, P.A.

Scott M. McGee

Scott M. McGee, P.E.

SMM/rtl
Enclosures

APR 10 1995
HYDROLOGY

128 Monroe St. NE • Albuquerque, NM 87108 • (505) 268-8828 • FAX (505) 268-2632

CHICK'S HARLEY DAVIDSON
OFFSITE FLOW EXHIBIT

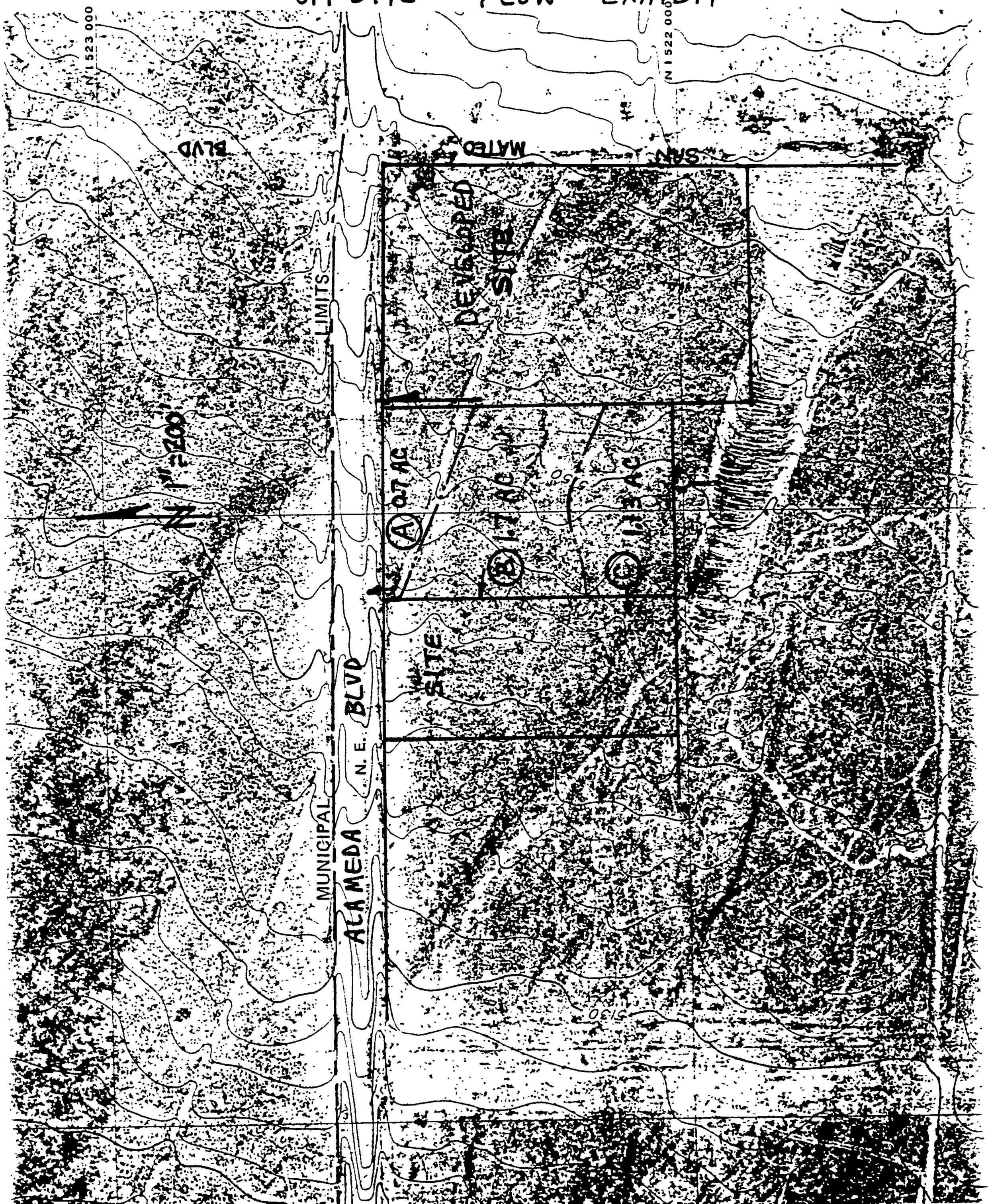

OFFSITE PARCEL : E-2-A

$$\text{AREA} = \frac{(313.85 \times 489.95)}{43{,}560\ SF/AC} = 3.530\ AC$$

AREA (AC)	BASIN ○	Q_{100} (CFS)	COMMENTS
0.70	A	1.1	DISHARGES TO ALAMEDA
1.70	B	2.6 *	ACCEPTED ONSITE
1.13	C	1.8 *	ACCEPTED ONSITE
		5.5 CFS	

AT TIME OF DEVELOPMENT OF TRACT E-2-A, IT IS ANTICIPATED THAT DEVELOPED RUNOFF WILL BE DIRECTED TO ALAMEDA BLVD. & RUNOFF TO THIS SITE WILL BE GREATLY REDUCED.

* OFFSITE FLOW = 2.6 + 1.8 = 4.4 CFS (ACCEPTED ONSITE)
OFF SITE FLOWS ACCEPTED ONSITE ARE ROUTED AROUND THE BUILDING TO THE DETENTION POND. ✓

SAD #201 INSTALLED THE 30" - 78" STORM DRAIN IN ALAMEDA (RICHFIELD) IN 1983. DEVELOPED CONDITIONS ("C" = 0.75 FOR 78% IMPERVIOUS) WERE ASSUMED WHICH GAVE A UNIT DISCHARGE OF $Q_{1.0\,AC} = (0.75)(3.06)1.00\,AC = 2.29\,CFS/AC$

THIS SITE'S DISCHARGE WILL THEN BE THE OFFSITE FLOW (ACCEPTED ONSITE: Q = 4.4 CFS) & THE ALLOWABLE DEVELOPED DISCHARGE AT 2.29 CFS/AC.

ALLOWABLE $Q = 4.4\,CFS + (2.29\,CFS/AC)(2.6044\,AC)$

$Q = 4.4 + 5.9 = \underline{\underline{10.3\,CFS}}$ ✓

SAD #201 DESIGN CRITERIA INCLUDED:

" 2 a) INDIVIDUAL TRACTS REQUIRED TO DESIGN FOR CONTROLLED DISCHARGE (10-YR FLOW) TO BACK OF STREET INLETS WHEREVER AN INLET IS AVAILABLE. " ✓

THE CONNECTOR PIPE WAS OVERSIZED (21"ϕ) IN ANTICIPATION OF A FUTURE TIE-IN.

APR 10 1995
HYDRUL

$t_c = 12$ MINS $\qquad t_p = 0.7\,t_c + 8 - 5\left(\frac{A_D}{A_T}\right) = (0.7)(12) + 8 - 5\left(\frac{1.69}{5.434}\right) = 14.8$ MIN

$t_b = 121E\left(\frac{A_T}{Q_P}\right) - 15\left(\frac{A_D}{A_T}\right) = (121)(1.077)\left(\frac{5.4344}{15.5}\right) - 15\left(\frac{1.69}{5.434}\right) = 41.0$ MIN

Peak time $= 15\left(\frac{A_D}{A_T}\right) = 15\left(\frac{1.69}{5.434}\right) = 4.66$ MIN

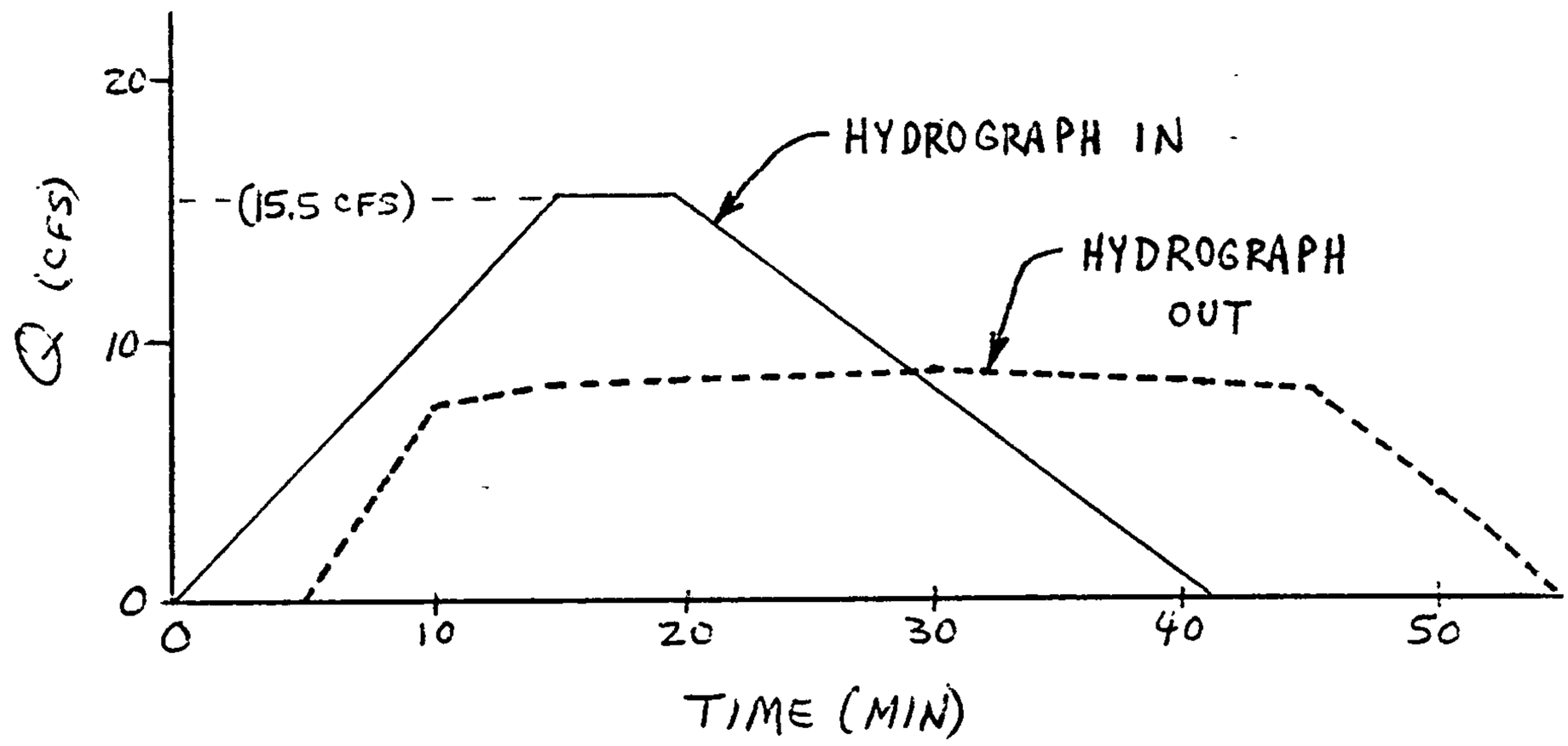

TIME (MIN)	Q_{IN} (CFS)	Q_{OUT} (CFS)	VOL (CF)	DEPTH (FT) (ABOVE 38.0 INV)
0	0	0	0	0
5	5.2	0	780	0.3
10	10.3	7.5	2000	0.8
15	15.5	8.3	3500	1.2
20	15.5	8.6	5600	1.6
25	11.9	8.8	7100	1.8
30	7.9	8.9	7400	1.9
35	4.3	8.7	6600	1.7
40	0.7	8.5	4800	1.5
45	0	8.1	2450	1.0

City of Albuquerque
P.O. BOX 1293 ALBUQUERQUE, NEW MEXICO 87103

March 23, 1995

Scott McGee, P.E.
Isaacson & Arfman, P.A.
128 Monroe Street NE
Albuquerque, NM 87108

RE: GRADING AND DRAINAGE PLAN FOR CHICK'S HARLEY DAVIDSON (C17/D14C), SUBMITTED FOR BUILDING PERMIT APPROVAL, ENGINEER'S STAMP DATED 3/8/95

Dear Mr. McGee:

Prior to approval for building permit release, the following comments must be addressed:

1. Although the property is not within a 100-year floodplain, Alameda Boulevard is within flood zone AO, depth 1, as shown on FIRM panel 9. Storm drainage improvements have been constructed in Alameda, however the FEMA flood maps have not been revised. This must be noted on the plan. The City flood hazard ordinance requires that the finish floor elevation be a minimum of one foot above the base flood elevation (bfe). Adjacent to this site, the flowline is approximately at elevation 5142, therefore the bfe would be at elevation 5143 and the finish floor should be at 5144. Please revise this.

2. On the plan, please delineate the limits of the off-site basin that contributes flows to this site. Does the Q_{100} calculated for Proposed conditions include this off-site flow? Do off-site flows enter the site on the southeast corner from the existing 18" pipe?

3. What is the downstream capacity for the storm drain that you propose to tie into? What is the purpose of the proposed detention pond? These need to be identified on the plan.

If you should have any questions regarding these comments, please do not hesitate to call me.

Sincerely,

Susan Calongne

Susan M. Calongne, P.E.
City/County Floodplain Administrator

c: Andrew Garcia, City Hydrology
File

THE CITY OF ALBUQUERQUE IS AN EQUAL OPPORTUNITY/REASONABLE ACCOMMODATION EMPLOYER

DRAINAGE INFORMATION SHEET

PROJECT TITLE: CHICK'S HARLEY DAVIDSON ZONE ATLAS/DRNG. FILE #: C-17 / D14C

DRB #: _____ EPC #: _____ WORK ORDER #: _____

LEGAL DESCRIPTION: TR F-2, LOOP INDUSTRIAL DISTRICT

CITY ADDRESS: WEST OF SAN MATEO - SOUTH SIDE OF ALAMEDA BLVD

ENGINEERING FIRM: I&A CONTACT: SCOTT MCGEE

ADDRESS: 128 MONROE NE PHONE: 268-8828

OWNER: CHICK CONTACT: CHICK

ADDRESS: 8207 CENTRAL E PHONE: 266-6777

ARCHITECT: CHERRY SEE CONTACT: JIM SEE

ADDRESS: 220 A GOLD SW PHONE: 842-1278

SURVEYOR: FORSTBAUER SURVEYING CONTACT: RON FORSTBAUER

ADDRESS: 1100 ALVARADO NE PHONE: 268-2112

CONTRACTOR: UNKNOWN CONTACT: _____

ADDRESS: _____ PHONE: _____

TYPE OF SUBMITTAL:

____ DRAINAGE REPORT
X DRAINAGE PLAN
____ CONCEPTUAL GRADING & DRAINAGE PLAN
X GRADING PLAN
____ EROSION CONTROL PLAN
____ ENGINEER'S CERTIFICATION
____ OTHER

PRE-DESIGN MEETING:

____ YES
X NO
____ COPY PROVIDED

CHECK TYPE OF APPROVAL SOUGHT:

____ SKETCH PLAT APPROVAL
____ PRELIMINARY PLAT APPROVAL
____ S. DEV. PLAN FOR SUB'D. APPROVAL
____ S. DEV. PLAN FOR BLDG. PERMIT APPROVAL
____ SECTOR PLAN APPROVAL
____ FINAL PLAT APPROVAL
____ FOUNDATION PERMIT APPROVAL
X BUILDING PERMIT APPROVAL
____ CERTIFICATE OF OCCUPANCY APPROVAL
____ GRADING PERMIT APPROVAL
____ PAVING PERMIT APPROVAL
____ S.A.D. DRAINAGE REPORT
____ DRAINAGE REQUIREMENTS
____ OTHER _____ (SPECIFY)

DATE SUBMITTED: 3·8·95

BY: Scott M McGee

MAR - 8 1995

Mark Haley
Vice President
Construction & Development
573-7182
mhaley@cauwels-stuve.com
505 266.5711 phone 505 255 9922 facsimile

Cauwels & Stuve
Realty & Development Advisors, L L C
8814 Horizon Blvd NE
Suite 400
Albuquerque, NM 87113
www cauwels-stuve com

2·8·02