GENERAL NOTES:

1: CONTOUR INTERVAL IS ONE (1.00) FOOT.
2: ELEVATIONS ARE BASED ON CITY OF ALBUQUERQUE CONTROL STATION 9–C18, HAVING AN ELEVATION OF 5232.47 FEET ABOVE SEA LEVEL.
3: UTILITIES SHOWN HEREON ARE IN THEIR APPROXIMATE LOCATION BASED ONLY ON ABOVE GROUND EVIDENCE FOUND IN THE FIELD AND AS–BUILT INFORMATION PROVIDED BY THE CLIENT. UTILITIES SHOWN HEREON, WHETHER INDICATED AS ABANDONED OR NOT, SHALL BE VERIFIED BY OTHERS FOR EXACT LOCATION AND/ OR DEPTH PRIOR TO EXCAVATION OR DESIGN CONSIDERATIONS.
4: THIS IS NOT A BOUNDARY SURVEY, BEARINGS ARE ASSUMED, DISTANCES AND FOUND PROPERTY CORNERS ARE FOR INFORMATIONAL PURPOSES ONLY.
5: SLOPES ARE AT 3:1 MAXIMUM.

KEYED NOTES

1. CUT AND REMOVE EXISTING ASPHALT PAVING AS REQUIRED BY NEW CONSTRUCTION.
2. EXISTING ASPHALT PAVING.
3. EXISTING TRASH ENCLOSURE, SAWCUT AND REMOVE.
4. NEW TRASH ENCLOSURE W/RECYCLE BIN LOCATION.
5. EXISTING GRAVEL BASE COURSE DRIVE/ PARKING SURFACE.
6. EXISTING ASPHALT DRAINAGE SWALE WITH CURB & GUTTER.
7. EXISTING 24" SIDEWALK CULVERT.
8. EXISTING ENTRANCE.
9. EXISTING MEDIAN CURB TYP.
10. EXISTING SIDEWALK.
10. NEW WASH BAY TO DRAIN INTO SANITARY SEWER, SEE MECHANICAL DRAWING FOR DETAIL.

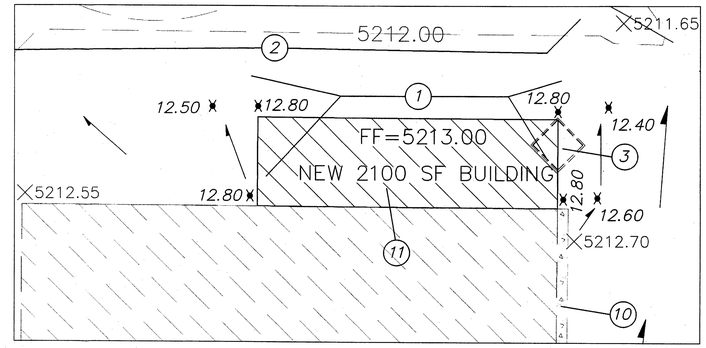

SCALE: 1"=20'

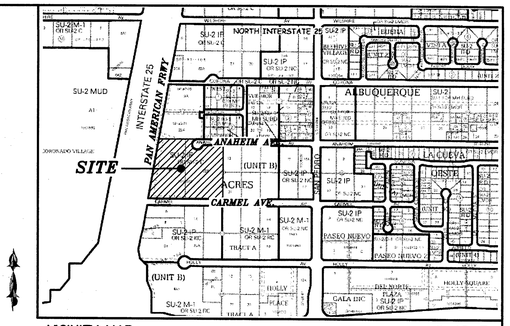

VICINITY MAP: C–18–Z

LEGAL DESCRIPTION:
TRACTS 8–A & 22–A, BLOCK 16, TRACT A, UNIT B, NORTH ALBUQUERQUE ACRES CONTAINING 6.0936 ACRES

SITE ADDRESS
8300 PAN AMERICAN FRWY, NE

Location
The site is located at 8300 Pan American FRWY, NE between Carmel Ave. NE, and Anaheim Ave., NE.

Purpose
The purpose of this Grading and Drinage Plan is to show the proposed grades for the new building addition and the exiting drainge pattern for this site. We are requesting building permit approval.

Existing Drainage Conditions
The site drains from east to west to existing detention pond and finally to the box culvert under I-25 via a 6" outlet pipe. The original grading plan was prepared by Bohannan Houston in 2000, see drainage file C-18/D14 for referenc.

Proposed Conditions and On-Site Drainage Management Plan
The new building will be built over exiting impervious surface, and no additional runoff is being generated from this site. The drainage pattern will remain the same.

CURVE DATA						
NO.	DELTA	TANGENT	ARC	RADIUS	CHORD	CHORD BEARING
C1	172°26'54"	681.85	135.44	45.00	89.80	S66°25'57"E
C2	62°58'37"	15.31	27.48	25.00	26.12	S58°49'55"W
C3	70°31'44"	31.82	55.39	45.00	51.96	S55°03'22"W

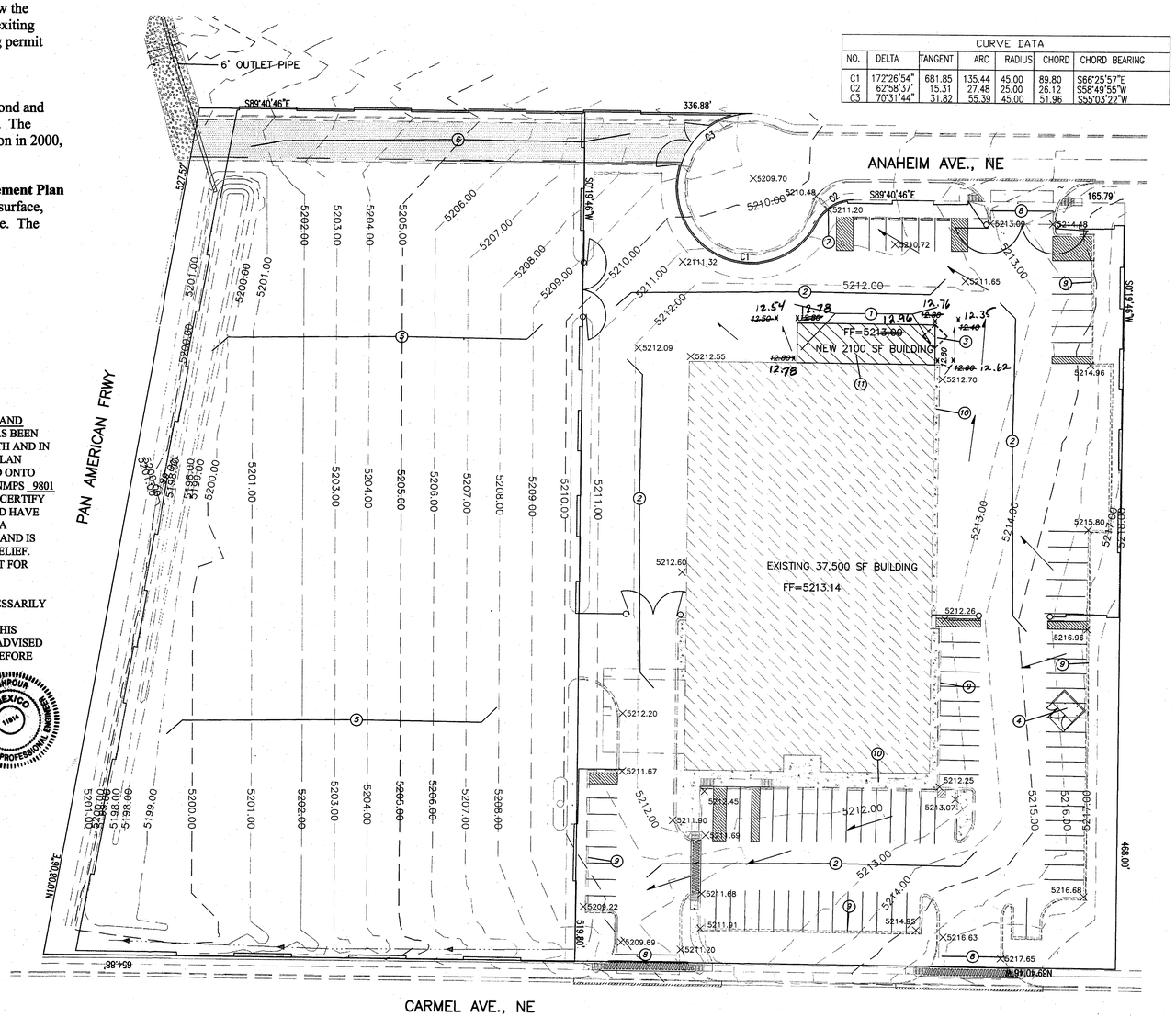

DRAINAGE CERTIFICATION

I, REZA AFAGHPOUR , NMPE 11814 , OF SBS CONSTRUCTION AND ENGINEERING, LLC , HEREBY CERTIFY THAT THIS PROJECT HAS BEEN GRADED AND WILL DRAIN IN SUBSTANTIAL COMPLIANCE WITH AND IN ACCORDANCE WITH THE DESIGN INTENT OF THE APPROVED PLAN DATED 11/13/2012 . THE RECORD INFORMATION EDITED ONTO THE ORIGINAL DESIGN DOCUMENT HAS BEEN OBTAINED BY NMPS 9801 , OF SBS CONSTRUCTION AND ENGINEERING, LLC . I FURTHER CERTIFY THAT I HAVE PERSONALLY VISITED THE PROJECT SITE ON AND HAVE DETERMINED BY VISUAL INSPECTION THAT THE SURVEY DATA PROVIDED IS REPRESENTATIVE OF ACTUAL SITE CONDITIONS AND IS TRUE AND CORRECT TO THE BEST OF MY KNOWLEDGE AND BELIEF. THIS CERTIFICATION IS SUBMITTED IN SUPPORT OF A REQUEST FOR FINAL CERTIFICATE OF OCCUPANCY .

THE RECORD INFORMATION PRESENTED HEREON IS NOT NECESSARILY COMPLETE AND INTENDED ONLY TO VERIFY SUBSTANTIAL COMPLIANCE OF THE GRADING AND DRAINAGE ASPECTS OF THIS PROJECT. THOSE RELYING ON THIS RECORD DOCUMENT ARE ADVISED TO OBTAIN INDEPENDENT VERIFICATION OF ITS ACCURACY BEFORE USING IT FOR ANY OTHER PURPOSE.

REZA AFAGHPOUR NEW MEXICO 11814 LICENSED PROFESSIONAL ENGINEER

3/1/2013
REZA AFAGHPOUR, NMPE 11814 DATE

EROSION CONTROL PLAN AND POLLUTION PREVENTION NOTES

1. CONTRACTOR IS RESPONSIBLE FOR OBTAINING A TOPSOIL DISTURBANCE PERMIT PRIOR TO BEGINNING WORK.
2. CONTRACTOR IS RESPONSIBLE FOR CLEANING ALL SEDIMENT OUT OF EXISTING RIGHT–OF–WAY.
3. CONTRACTOR IS RESPONSIBLE FOR MAINTAINING ALL STORM RUNOFF ON SITE.
4. REPAIR OF DAMAGED FACILITIES AND CLEAN–UP OF SEDIMENT ACCUMULATION ON ADJACENT PROPERTIES AND IN PUBLIC FACILITIES IS THE RESPONSIBILITY OF THE CONTRACTOR.
5. ALL EXPOSED EARTH SURFACES MUST BE PROTECTED FROM WIND AND WATER EROSION PRIOR TO FINAL ACCEPTANCE OF ANY PROJECT.
6. ALL THE DISTURBED AREAS MUST BE REVEGETATED.

NOTICE TO CONTRACTORS

1. AN EXCAVATION/CONSTRUCTION PERMIT WILL BE REQUIRED BEFORE BEGINNING ANY WORK WITHIN CITY RIGHT–OF–WAY.

2. ALL WORK DETAILED ON THESE PLANS TO BE PERFORMED, EXCEPT AS OTHERWISE STATED OR PROVIDED HEREON, SHALL BE CONSTRUCTED IN ACCORDANCE WITH CITY OF ALBUQUERQUE INTERIM STANDARD SPECIFICATIONS FOR PUBLIC WORKS CONSTRUCTION, 1985.

3. TWO WORKING DAYS PRIOR TO ANY EXCAVATION, CONTRACTOR MUST CONTACT LINE LOCATING SERVICE, 765–1234, FOR LOCATION OF EXISTING UTILITIES.

4. PRIOR TO CONSTRUCTION, THE CONTRACTOR SHALL EXCAVATE AND VERIFY THE HORIZONTAL AND VERTICAL LOCATIONS OF ALL CONSTRUCTIONS. SHOULD A CONFLICT EXIST, THE CONTRACTOR SHALL NOTIFY THE ENGINEER SO THAT THE CONFLICT CAN BE RESOLVED WITH A MINIMUM AMOUNT OF DELAY.

5. BACKFILL COMPACTION SHALL BE ACCORDING TO TRAFFIC/STREET USE.

6. MAINTENANCE OF THESE FACILITIES SHALL BE THE RESPONSIBILITY OF THE OWNER OF THE PROPERTY SERVED.

7. WORK ON ARTERIAL STREETS SHALL BE PERFORMED ON A 24–HOUR BASIS.

LEGEND

5100	EXISTING CONTOUR (MAJOR)
5102	EXISTING CONTOUR (MINOR)
	BOUNDARY LINE
✗ 36.05	PROPOSED SPOT ELEVATION
×5211.54	EXISTING GRADE
✗ ~~12.50~~ 12.54	As-Built

GRAPHIC SCALE
40 20 0 40
SCALE: 1"=40'

REZA AFAGHPOUR NEW MEXICO 11814 REGISTERED PROFESSIONAL ENGINEER
11/13/2012
ENGINEER SEAL

SBS CONSTRUCTION AND ENGINEERING, LLC
P. O. BOX 10264
ALBUQUERQUE, NEW MEXICO 87184
(505)899-5570

ALOHA RV
NEW BUILDING ADDITION
GRADING AND DRAINAGE PLAN

	DRAWN BY:	DATE:	SHEET #
201221-GR.DWG	SBB	11-12-12	1 OF 1

RECEIVED MAR 0 1 2013

GENERAL NOTES:

1: CONTOUR INTERVAL IS ONE (1.00) FOOT.
2: ELEVATIONS ARE BASED ON CITY OF ALBUQUERQUE CONTROL STATION 9–C18, HAVING AN ELEVATION OF 5232.47 FEET ABOVE SEA LEVEL.
3: UTILITIES SHOWN HEREON ARE IN THEIR APPROXIMATE LOCATION BASED ONLY ON ABOVE GROUND EVIDENCE FOUND IN THE FIELD AND AS–BUILT INFORMATION PROVIDED BY THE CLIENT. UTILITIES SHOWN HEREON, WHETHER INDICATED AS ABANDONED OR NOT, SHALL BE VERIFIED BY OTHERS FOR EXACT LOCATION AND/ OR DEPTH PRIOR TO EXCAVATION OR DESIGN CONSIDERATIONS.
4: THIS IS NOT A BOUNDARY SURVEY, BEARINGS ARE ASSUMED, DISTANCES AND FOUND PROPERTY CORNERS ARE FOR INFORMATIONAL PURPOSES ONLY.
5: SLOPES ARE AT 3:1 MAXIMUM.

KEYED NOTES

1. CUT AND REMOVE EXISTING ASPHALT PAVING AS REQUIRED BY NEW CONSTRUCTION.
2. EXISTING ASPHALT PAVING.
3. EXISTING TRASH ENCLOSURE, SAWCUT AND REMOVE.
4. NEW TRASH ENCLOSURE W/RECYCLE BIN LOCATION.
5. EXISTING GRAVEL BASE COURSE DRIVE/ PARKING SURFACE.
6. EXISTING ASPHALT DRAINAGE SWALE WITH CURB & GUTTER.
7. EXISTING 24" SIDEWALK CULVERT.
8. EXISTING ENTRANCE.
9. EXISTING MEDIAN CURB TYP.
10. EXISTING SIDEWALK.
11. NEW WASH BAY TO DRAIN INTO SANITARY SEWER, SEE MECHANICAL DRAWING FOR DETAIL.

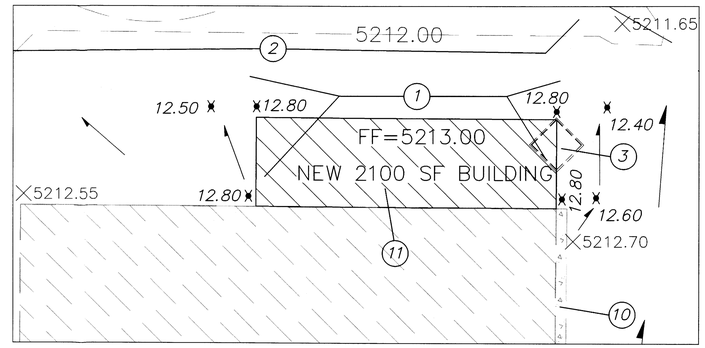

SCALE: 1"=20'

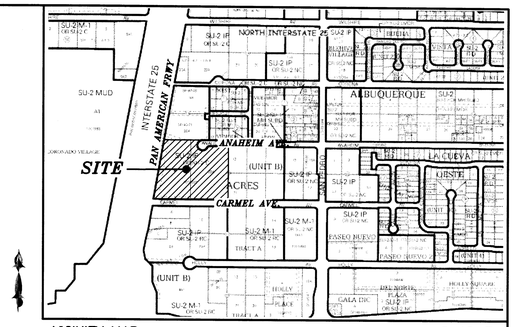

VICINITY MAP: C–18–Z

LEGAL DESCRIPTION:

TRACTS 8–A & 22–A, BLOCK 16, TRACT A, UNIT B, NORTH ALBUQUERQUE ACRES CONTAINING 6.0936 ACRES

SITE ADDRESS

8300 PAN AMERICAN FRWY, NE

Location

The site is located at 8300 Pan American FRWY, NE between Carmel Ave. NE, and Anaheim Ave., NE.

Purpose

The purpose of this Grading and Drinage Plan is to show the proposed grades for the new building addition and the exiting drainge pattern for this site. We are requesting building permit approval.

Existing Drainage Conditions

The site drains from east to west to existing detention pond and finally to the box culvert under I-25 via a 6" outlet pipe. The original grading plan was prepared by Bohannan Houston in 2000, see drainage file C-18/D14 for reference.

Proposed Conditions and On-Site Drainage Management Plan

The new building will be built over exiting impervious surface, and no additional runoff is being generated from this site. The drainage pattern will remain the same.

CURVE DATA						
NO.	DELTA	TANGENT	ARC	RADIUS	CHORD	CHORD BEARING
C1	172°26'54"	681.85	135.44	45.00	89.80	S66°25'57"E
C2	62°58'37"	15.31	27.48	25.00	26.12	S58°49'55"W
C3	70°31'44"	31.82	55.39	45.00	51.96	S55°03'22"W

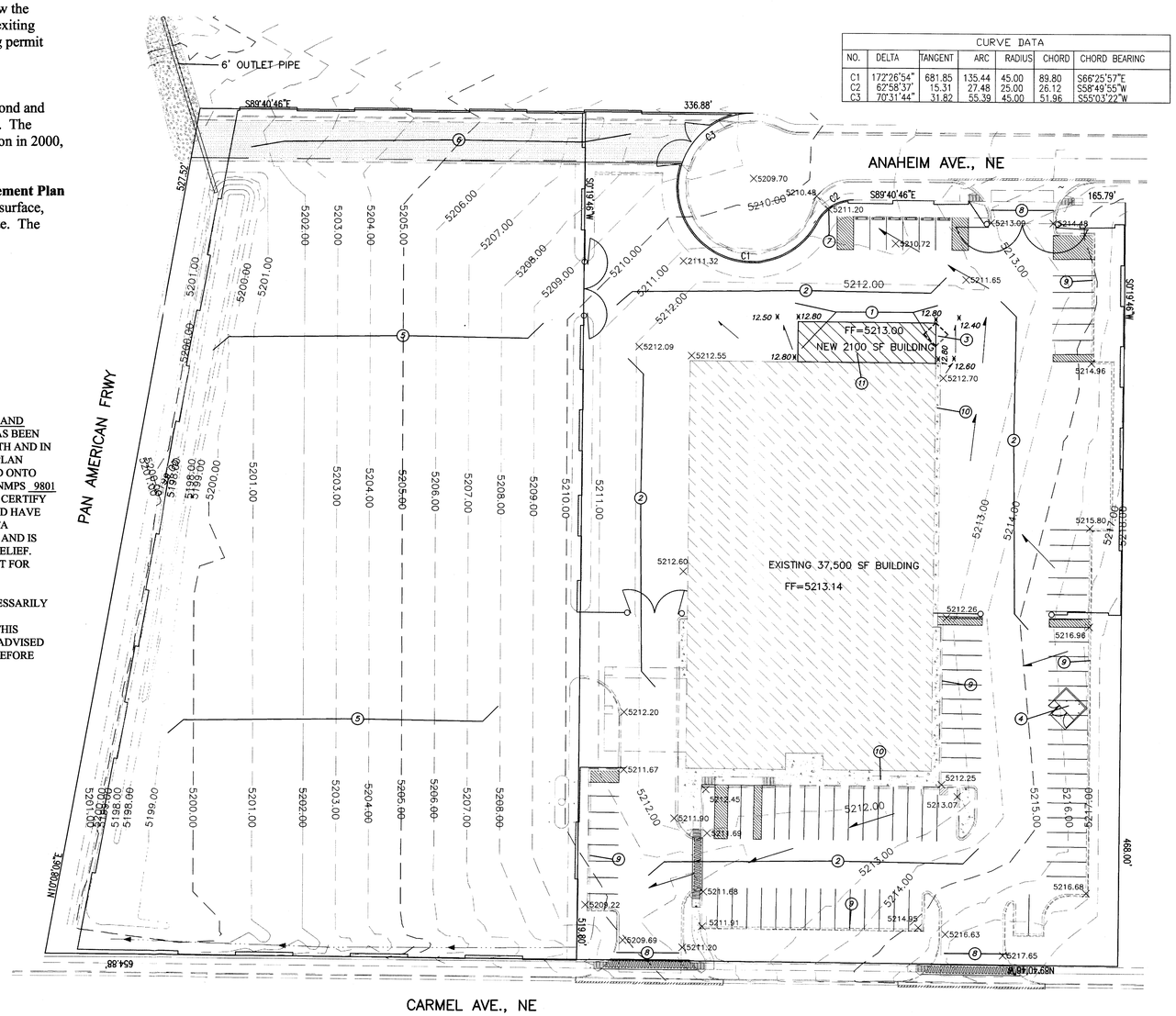

DRAINAGE CERTIFICATION

I, REZA AFAGHPOUR , NMPE 11814 , OF SBS CONSTRUCTION AND ENGINEERING, LLC , HEREBY CERTIFY THAT THIS PROJECT HAS BEEN GRADED AND WILL DRAIN IN SUBSTANTIAL COMPLIANCE WITH AND IN ACCORDANCE WITH THE DESIGN INTENT OF THE APPROVED PLAN DATED_____. THE RECORD INFORMATION EDITED ONTO THE ORIGINAL DESIGN DOCUMENT HAS BEEN OBTAINED BY NMPS 9801 , OF SBS CONSTRUCTION AND ENGINEERING, LLC . I FURTHER CERTIFY THAT I HAVE PERSONALLY VISITED THE PROJECT SITE ON AND HAVE DETERMINED BY VISUAL INSPECTION THAT THE SURVEY DATA PROVIDED IS REPRESENTATIVE OF ACTUAL SITE CONDITIONS AND IS TRUE AND CORRECT TO THE BEST OF MY KNOWLEDGE AND BELIEF. THIS CERTIFICATION IS SUBMITTED IN SUPPORT OF A REQUEST FOR FINAL CERTIFICATE OF OCCUPANCY .

THE RECORD INFORMATION PRESENTED HEREON IS NOT NECESSARILY COMPLETE AND INTENDED ONLY TO VERIFY SUBSTANTIAL COMPLIANCE OF THE GRADING AND DRAINAGE ASPECTS OF THIS PROJECT. THOSE RELYING ON THIS RECORD DOCUMENT ARE ADVISED TO OBTAIN INDEPENDENT VERIFICATION OF ITS ACCURACY BEFORE USING IT FOR ANY OTHER PURPOSE.

_____

REZA AFAGHPOUR, NMPE 11814 DATE

EROSION CONTROL PLAN AND POLLUTION PREVENTION NOTES

1. CONTRACTOR IS RESPONSIBLE FOR OBTAINING A TOPSOIL DISTURBANCE PERMIT PRIOR TO BEGINNING WORK.
2. CONTRACTOR IS RESPONSIBLE FOR CLEANING ALL SEDIMENT OUT OF EXISTING RIGHT–OF–WAY.
3. CONTRACTOR IS RESPONSIBLE FOR MAINTAINING ALL STORM RUNOFF ON SITE.
4. REPAIR OF DAMAGED FACILITIES AND CLEAN–UP OF SEDIMENT ACCUMULATION ON ADJACENT PROPERTIES AND IN PUBLIC FACILITIES IS THE RESPONSIBILITY OF THE CONTRACTOR.
5. ALL EXPOSED EARTH SURFACES MUST BE PROTECTED FROM WIND AND WATER EROSION PRIOR TO FINAL ACCEPTANCE OF ANY PROJECT.
6. ALL THE DISTURBED AREAS MUST BE REVEGETATED.

NOTICE TO CONTRACTORS

1. AN EXCAVATION/CONSTRUCTION PERMIT WILL BE REQUIRED BEFORE BEGINNING ANY WORK WITHIN CITY RIGHT–OF–WAY.

2. ALL WORK DETAILED ON THESE PLANS TO BE PERFORMED, EXCEPT AS OTHERWISE STATED OR PROVIDED HEREON, SHALL BE CONSTRUCTED IN ACCORDANCE WITH CITY OF ALBUQUERQUE INTERIM STANDARD SPECIFICATIONS FOR PUBLIC WORKS CONSTRUCTION, 1985.

3. TWO WORKING DAYS PRIOR TO ANY EXCAVATION, CONTRACTOR MUST CONTACT LINE LOCATING SERVICE, 765–1234, FOR LOCATION OF EXISTING UTILITIES.

4. PRIOR TO CONSTRUCTION, THE CONTRACTOR SHALL EXCAVATE AND VERIFY THE HORIZONTAL AND VERTICAL LOCATIONS OF ALL CONSTRUCTIONS. SHOULD A CONFLICT EXIST, THE CONTRACTOR SHALL NOTIFY THE ENGINEER SO THAT THE CONFLICT CAN BE RESOLVED WITH A MINIMUM AMOUNT OF DELAY.

5. BACKFILL COMPACTION SHALL BE ACCORDING TO TRAFFIC/STREET USE.

6. MAINTENANCE OF THESE FACILITIES SHALL BE THE RESPONSIBILITY OF THE OWNER OF THE PROPERTY SERVED.

7. WORK ON ARTERIAL STREETS SHALL BE PERFORMED ON A 24–HOUR BASIS.

LEGEND

5100	EXISTING CONTOUR (MAJOR)
5102	EXISTING CONTOUR (MINOR)
	BOUNDARY LINE
✱ 36.05	PROPOSED SPOT ELEVATION
X5211.54	EXISTING GRADE

GRAPHIC SCALE

40 20 0 40

SCALE: 1"=40'

REZA AFAGHPOUR NEW MEXICO 11814 REGISTERED PROFESSIONAL ENGINEER

11/13/2012

ENGINEER SEAL

RECEIVED NOV 13 2012 LAND DEVELOPMENT SECTION

SBS CONSTRUCTION AND ENGINEERING, LLC

P. O. BOX 10264
ALBUQUERQUE, NEW MEXICO 87184
(505)899-5570

ALOHA RV
NEW BUILDING ADDITION
GRADING AND DRAINAGE PLAN

	DRAWN BY:	DATE:	SHEET #
201221-GR.DWG	SBB	11-12-12	1 OF 1

Bohannan Huston
Courtyard One 7500 JEFFERSON NE Albuquerque NEW MEXICO 87109
ENGINEERS PLANNERS PHOTOGRAMMETRISTS SURVEYORS SOFTWARE DEVELOPERS

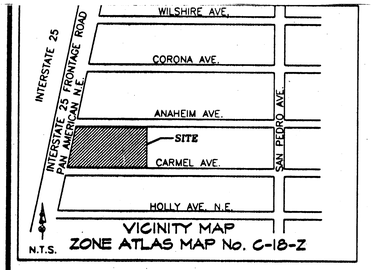

VICINITY MAP
ZONE ATLAS MAP No. C-18-Z

DRAINAGE CERTIFICATION

I, KERRY L. DAVIS, OF BOHANNAN HUSTON, N.M.P.E. # 9984 HEREBY CERTIFY THAT THE AS-BUILT DRAINAGE CONDITIONS OF THE SITE ARE IN SUBSTANTIAL COMPLIANCE WITH THE APPROVED GRADING AND DRAINAGE PLAN, TO THE BEST OF MY KNOWLEDGE AND BELIEF. AS-BUILT ELEVATIONS ARE SHOWN ON THE PLAN WHERE THE ORIGINAL DESIGN ELEVATION HAS BEEN CROSSED OUT AND THE AS-BUILT ELEVATION ADDED. AS-BUILT ELEVATIONS WERE VERIFIED BY BOHANNAN HUSTON L.S. # _____. THIS STATEMENT DOES NOT REPRESENT CERTIFICATION OF CONTRACTOR'S METHODS OR MATERIALS.

NAME

DATE 9/29/00

KERRY L. DAVIS NEW MEXICO 9984 REGISTERED PROFESSIONAL ENGINEER

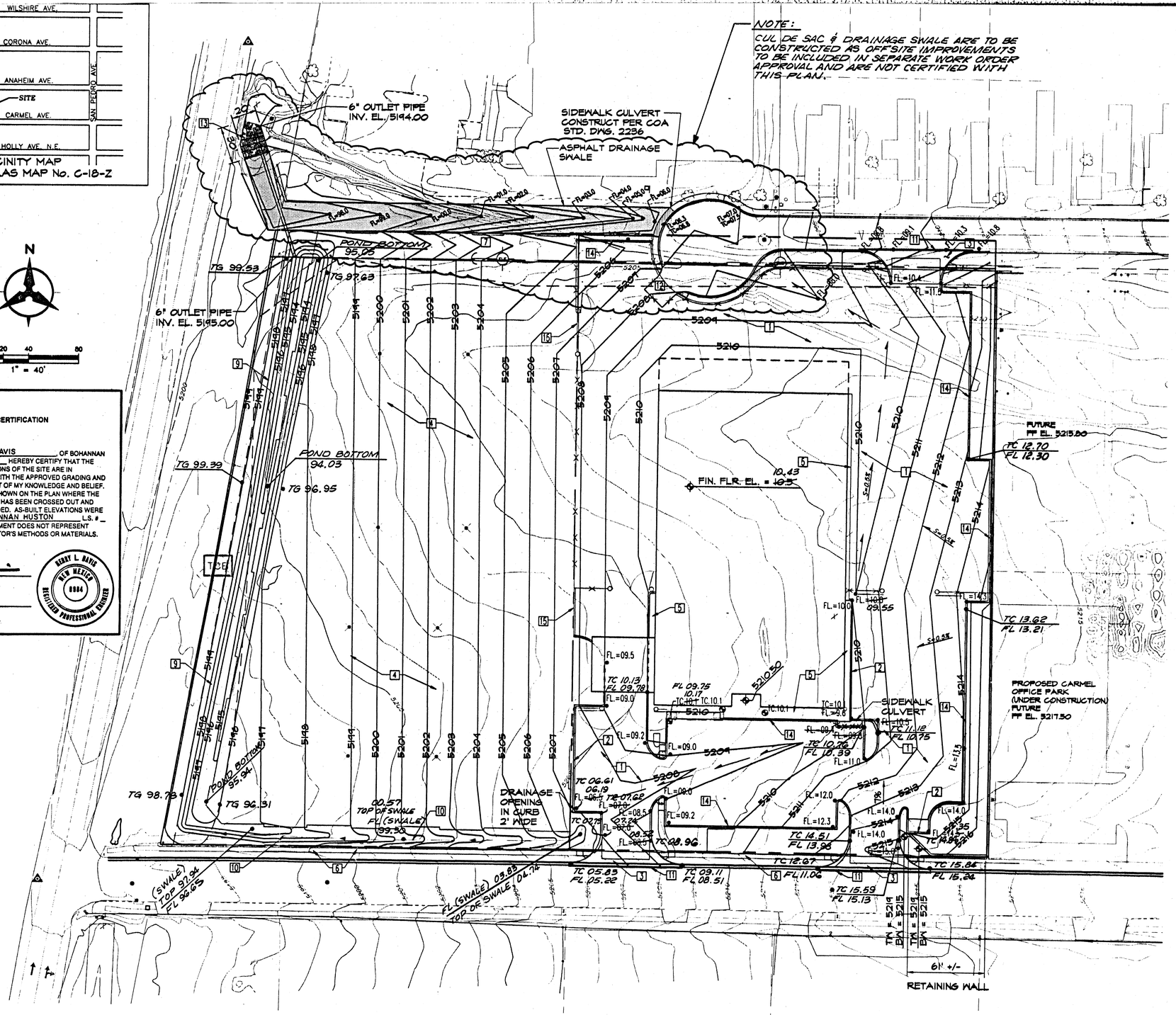

GRADING PLAN

SCALE: 1" = 40'

LEGEND

5197	EXISTING TOPOGRAPHIC INFORMATION
5198	PROPOSED TOPOGRAPHIC INFORMATION
	PROPOSED SIDEWALK CULVERT
✦	PROPOSED SPOT ELEVATION
	ASPHALT DRAINAGE SWALE - SEE SECTION SHEET 2

GENERAL NOTES

1. CONTRACTOR MUST OBTAIN A TOPSOIL DISTURBANCE PERMIT FROM THE ENVIRONMENTAL HEALTH DIVISION PRIOR TO (CONSTRUCTION.
2. THE CONTRACTOR IS TO REFER TO EARTHWORK SPECIFICATION AS NOTED IN THE SOILS REPORT PREPARED BY GEO-TEST, INC.
3. THE CONTRACTOR SHALL CONFORM TO ALL CITY, COUNTY, STATE, AND FEDERAL DUST CONTROL MEASURES AND REQUIREMENTS AND WILL BE RESPONSIBLE FOR PREPARING AND OBTAINING ALL NECESSARY APPLICATIONS AND APPROVALS.
4. THE CONTRACTOR SHALL ENSURE THAT NO SOIL ERODES FROM THE LOTS INTO PUBLIC RIGHT-OF-WAY. THIS CAN BE ACHIEVED BY CONSTRUCTING TEMPORARY BERMS AS PER DETAIL SHEET 5 AND WETTING THE SOIL TO KEEP IT FROM BLOWING.
5. ALL SPOT ELEVATIONS ARE TO FLOWLINE OR FINISH GRADE UNLESS OTHERWISE NOTED. TA=TOP ASPHALT TS = TOP SIDEWALK.
6. BOULDERS, GREATER THAN 3 FEET IN DIAMETER, EXCAVATED DURING GRADING ACTIVITIES SHALL BE STOCKPILED AND DISPOSED OF AT THE DISCRETION OF THE OWNER.
7. ROUGH GRADING WITHIN PUBLIC R.O.W. ALONG ANAHEIM WILL BE INCLUDED IN THIS CONTRACT, INCLUDING DRAINAGE SWALES, BERMS AND CULVERTS.
8. 4' DIAMETER MANHOLES SHALL BE PER COA STANDARD, OR APPROVED EQUAL.

KEYED NOTES

1. NEW ASPHALT PAVING - 2" THICK OVER 6" COMPACTED GRAVEL BASE COURSE OVER 12" COMPACTED SUB-GRADE.
2. NEW MEDIAN CURB AND GUTTER - CONSTRUCT PER COA STD. DWG. NO. 2415.
3. CONSTRUCT NEW PRIVATE ENTRANCE W/CONCRETE VALLEY GUTTER PER COA STD. DWG. NO. 2426 - REMOVE EXISTING CURB AND GUTTER AND SIDEWALK.
4. 4" COMPACTED GRAVEL BASE COURSE DRIVE/ PARKING SURFACE.
5. 4" THICK CONCRETE SURFACE.
6. EXISTING CONCRETE SIDEWALK TO REMAIN.
7. PORTION OF ANAHEIM AVE. VACATED PER V-99-88.
8. WIRE ENCLOSED RIPRAP - BUILD PER COA STD. DWG. NO. 2270.
9. DETENTION POND.
10. LANDSCAPED DRAINAGE SWALE.
11. SAW CUT, REMOVE AND REPLACE 12" MIN. ASPHALT AT NEW PRIVATE ENTRANCE LOCATIONS - MATCH EXISTING PAVEMENT ELEVATION.
12. REFUSE ENCLOSURE LOCATION.
13. CONSTRUCT 30'x20'x2' GROUTED RIPRAP SPLASH PAD @ CBC ENTRANCE.
14. HEADER CURB PER (C.O.A. STD. DWG. 2415)
15. CONSTRUCT NEW 1'X1' CONCRETE CUT-OFF WALL

RECEIVED SEP 29 2000 HYDROLOGY SECTION

REV	DATE	ACTION	DESCRIPTION	BY	APVD
1					
2					
3					
4					
5					

ALOHA R.V. / TRUCKS UNIQUE

PROPOSED GRADING AND DRAINAGE PLAN FOR RECREATIONAL VEHICLE SALES INCLUDING RELATED SERVICE AND REPAIR

I-25 FRONTAGE ROAD & CARMEL AVE. ALBUQUERQUE, NEW MEXICO

C-18/D014

GRADING PLAN

PROJECT NUMBER | Scale: AS NOTED | Date: 03/01/00 | Drwn. RPS/BJC | Chkd. PHW | Apvd. ___ | 1 of 2

P:\00246\CDP\DESIGN\SDGRADE2.DWG 03/01/00

DRAINAGE MANAGEMENT PLAN

I. INTRODUCTION / BACKGROUND / PURPOSE

The proposed Aloha RV site is located on the Pan American Freeway, between Anaheim and Carmel, within City of Albuquerque Zone Atlas Map No. C-18. The site is within Precipitation Zone 3 as defined in the DPM Section 22.2. The site currently comprises all or parts of lots 8, 9, 10, 11, 22, 23, 24 and 25, Block 16, Tract A of North Albuquerque Acres, and contains approximately 6.9 acres. A replat of the property is proposed, which will consolidate and redefine the property as Tract 8-A and 22-A, Block 16, Tract A, North Albuquerque Acres.

This site is within the area covered by the *North Albuquerque Acres Drainage Management Plan*, prepared for AMAFCA by Resource Technology, Inc., dated October, 1998. The area of the development is also covered by a Drainage Report prepared by Wilson and Co., titled *Summary Drainage Report for the Subarea I-25 Frontage Road to San Pedro/Paseo del Norte to Anaheim*, dated December, 1999.

This plan proposes to construct a recreational vehicle sales, storage, display and repair facility consisting of a maximum of 42,000 square feet. The building may be phased. The purpose of this plan is to identify existing and proposed drainage characteristics of the site, as required to receive Site Development Plan Approval and Building Permit Approval in accordance with the requirements of the North I-25 Sector Development Plan and the City of Albuquerque.

II. EXISTING CONDITIONS

Currently, the site slopes from east to west at approximately 3%. The existing site is sparsely covered with grasses and weeds. The site is currently undeveloped. The entire site drains toward the northwest and discharges to the existing box culvert crossing structures under I-25 within the North Domingo Baca Arroyo. The site accepts offsite flows from the parcels to the east, which are proposed to be routed to Anaheim via development of the Carmel Office Park. A separate drainage report for this adjacent development was submitted by ABQ Engineering, as discussed below.

III. PROPOSED DRAINAGE MANAGEMENT PLAN

Development of an RV Sales and Service facility at the site, will direct flows generated onsite toward Anaheim Avenue on the north, and to a proposed detention pond along the west boundary of the site adjacent to the I-25 Frontage Road. Offsite flows will be routed to and conveyed by Anaheim Avenue, which is proposed to be terminated in a cul-de-sac north of the proposed building. As proposed within the Drainage Report for the Carmel Office Park, and the Subarea drainage report by Wilson and Co., a surface conveyance is proposed to convey the developed runoff of approximately 33 CFS (offsite) plus approximately 7 CFS (onsite from Basin B3) from the end of the cul-de-sac to the concrete box culvert crossing structure under I-25. The surface conveyance proposed will be constructed within a public drainage and utility easement, and will consist of a 25' wide asphalt lined swale, at a slope of approximately 2%. Sidewalk culverts within the cul-de-sac will deliver flows from the street to the swale. Maintenance of the swale is anticipated to be provided by the property owners and governed by a maintenance covenant.

Outfall from the detention pond will be via a temporary 6" outlet pipe which will deliver flows to the concrete box culvert under I-25. A portion of the site (Basin B3) is identified with free discharge to Anaheim Avenue of approximately 7 CFS. The pond has been designed with to store the 100-year, 10-day volume. The discharge from the pond has been restricted to approximately 1.0 CFS (average), which is adequate to drain the pond in approximately 12 hours. The total discharge from the site will be approximately 8.0 CFS, which is roughly half of the existing undeveloped flow rate of approximately 2.2 CFS/Ac, totalling approximately 15.1 CFS for the site, as identified in the Subarea Drainage Report prepared by Wilson and Co. referenced above.

IV. CONCLUSIONS

This plan presents a complete conceptual drainage management plan for the proposed development, in conformance with the North Albuquerque Acres Drainage Management Plan and the Subarea Drainage Plan prepared by Wilson and Co. dated December, 1999.

DESCRIPTION	AREA (acres)	LAND TREATMENT TYPE A	B	C	D	TOTAL	VOLUME (ac-ft) 10 YR.	100 YR. 24 Hr.	100 YR. 10 Day	DISCHARGE (cfs) 10 YR.	100 YR.
Westerly Portion of Site- RV Display and Storage (Crusher Fines)	3.93	0%	0%	95%	5%	100%	0.22	0.44	0.47	8.1	13.9
South Portion of Building and Paved Parking Area	1.46	0%	0%	5%	95%	100%	0.18	0.28	0.49	4.8	7.2
Subtotal	5.39	0.0%	0.0%	70.0%	30.0%	100%	0.39	0.72	0.96	13.0	21.1
North Portion of Building and Parking Area (Discharge to Anaheim)	1.44	0%	0%	10%	90%	100%	0.17	0.27	N/A	4.7	7.0
Total Site Area	6.83						0.56	0.99		17.7	28.1
		0.0%	0.0%	57.8%	42.2%	100%	0.56	0.99		17.7	28.1

MISCELLANEOUS COMPUTATIONS

Required Pond Volume = 0.96 Ac. Ft.

Actual Pond Volume Provided

Elevation	Area	Avg Vol Cu. Ft.	Total Vol Cu. Ft.	Total Vol Ac. Ft.	Outlet Discharge 6" Outlet	Comments
5194	1313				0.0	6" Outlet Pipe w/ A= 0.21 Sq. Ft.
		2549.5				
5195	3786		2549.5	0.05853	0.0	
		6112				
5196	8438		8661.5	0.19884	0.7	
		11566.5				Average discharge = 1.0 CFS
5197	14695		20228	0.46437	1.2	
		21027.5				
5198	27360		41255.5	0.9471	1.6	Required Volume Achieved at Elevation 5198.1
		37008.5				Time to drain pond = 12 hours
5199	46653		78262	1.79665	1.9	at average discharge of 1.0 CFS

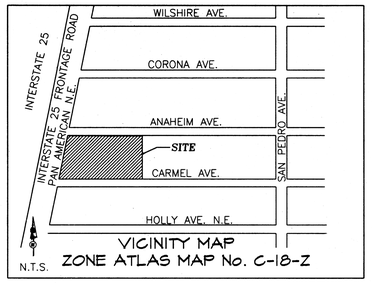

VICINITY MAP
ZONE ATLAS MAP No. C-18-Z

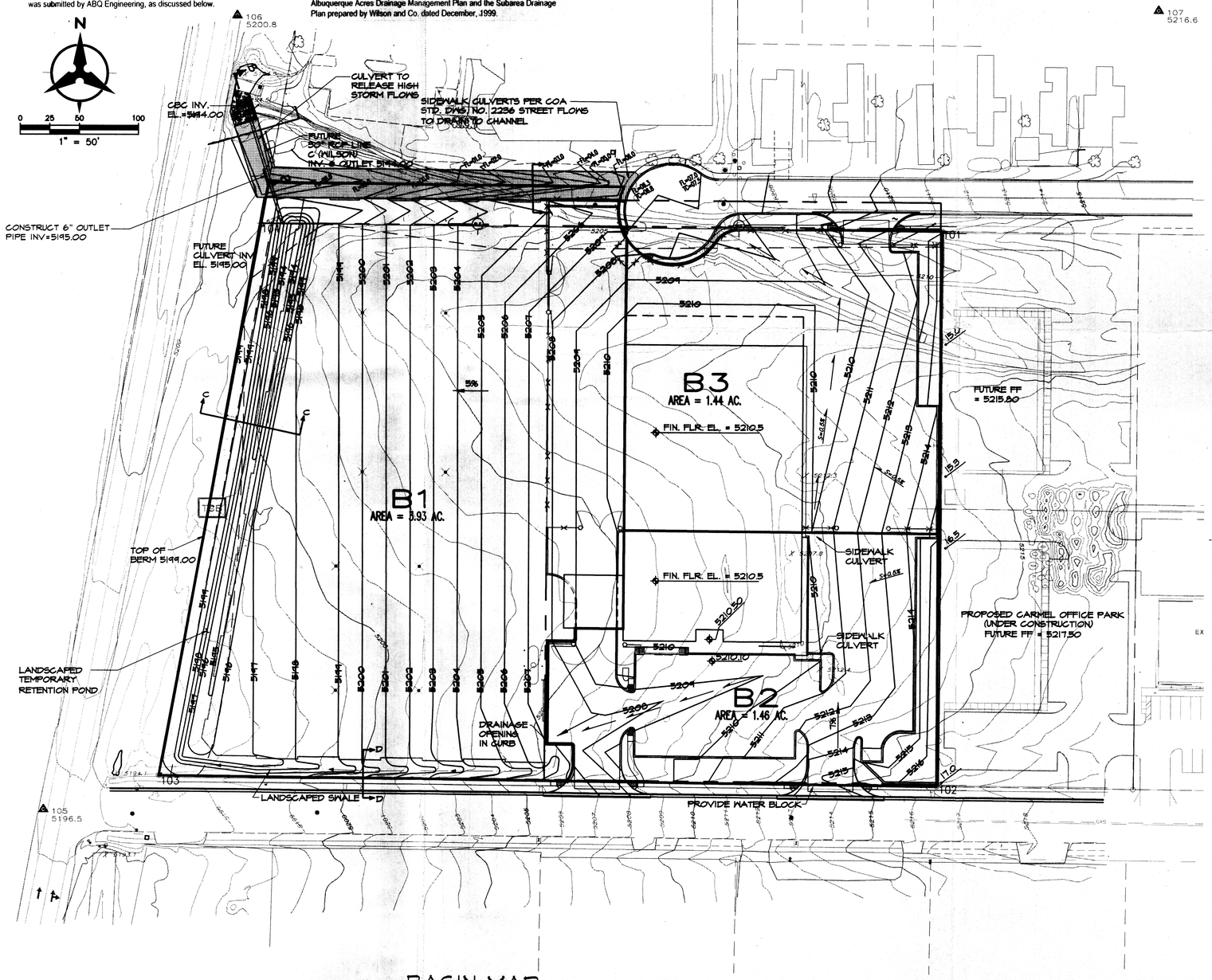

BASIN MAP
SCALE: 1" = 50'

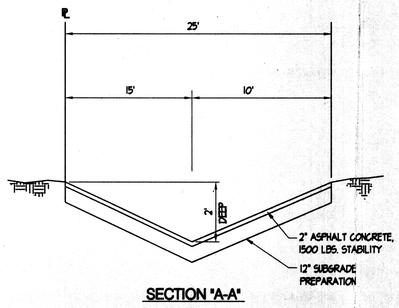

SECTION "A-A"
ASPHALT DRAINAGE SWALE
N.T.S.

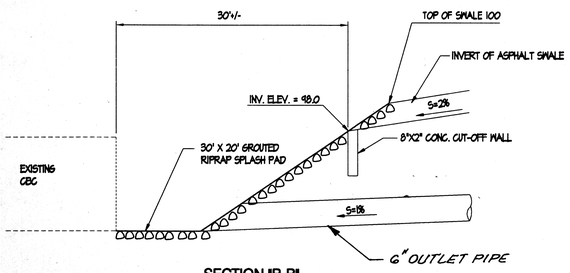

SECTION "B-B"
N.T.S.

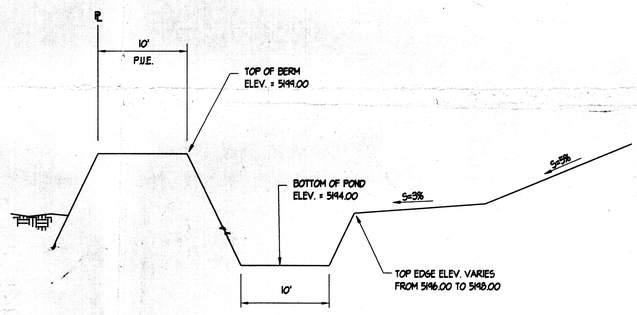

SECTION "C-C"
N.T.S.

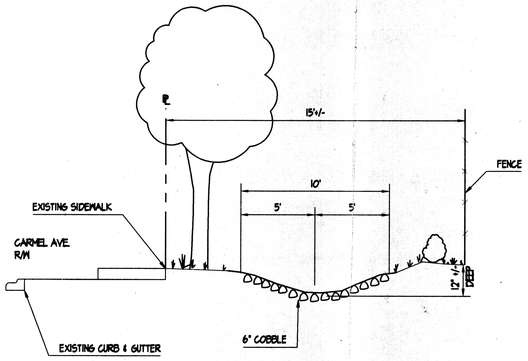

SECTION "D-D"
LANDSCAPE DRAINAGE SWALE
N.T.S.

LEGEND

BASIN BOUNDARY
TOPO
BUILDING

KERRY L. BAKER 9984 REGISTERED PROFESSIONAL ENGINEER 3-1-00

REV	DATE	ACTION	DESCRIPTION	BY	APVD
1					
2					
3					
4					
5					

ALOHA R.V. / TRUCKS UNIQUE

PROPOSED GRADING AND DRAINAGE PLAN
FOR
RECREATIONAL VEHICLE SALES
INCLUDING RELATED SERVICE AND REPAIR

I-25 FRONTAGE ROAD & CARMEL AVE.
ALBUQUERQUE, NEW MEXICO

DRAINAGE PLAN

PROJECT NUMBER	Scale: AS NOTED	
	Date: 03/01/00	
Drwn. RPS/BJG Chkd. PMW	Apvd. ---	2 of 2