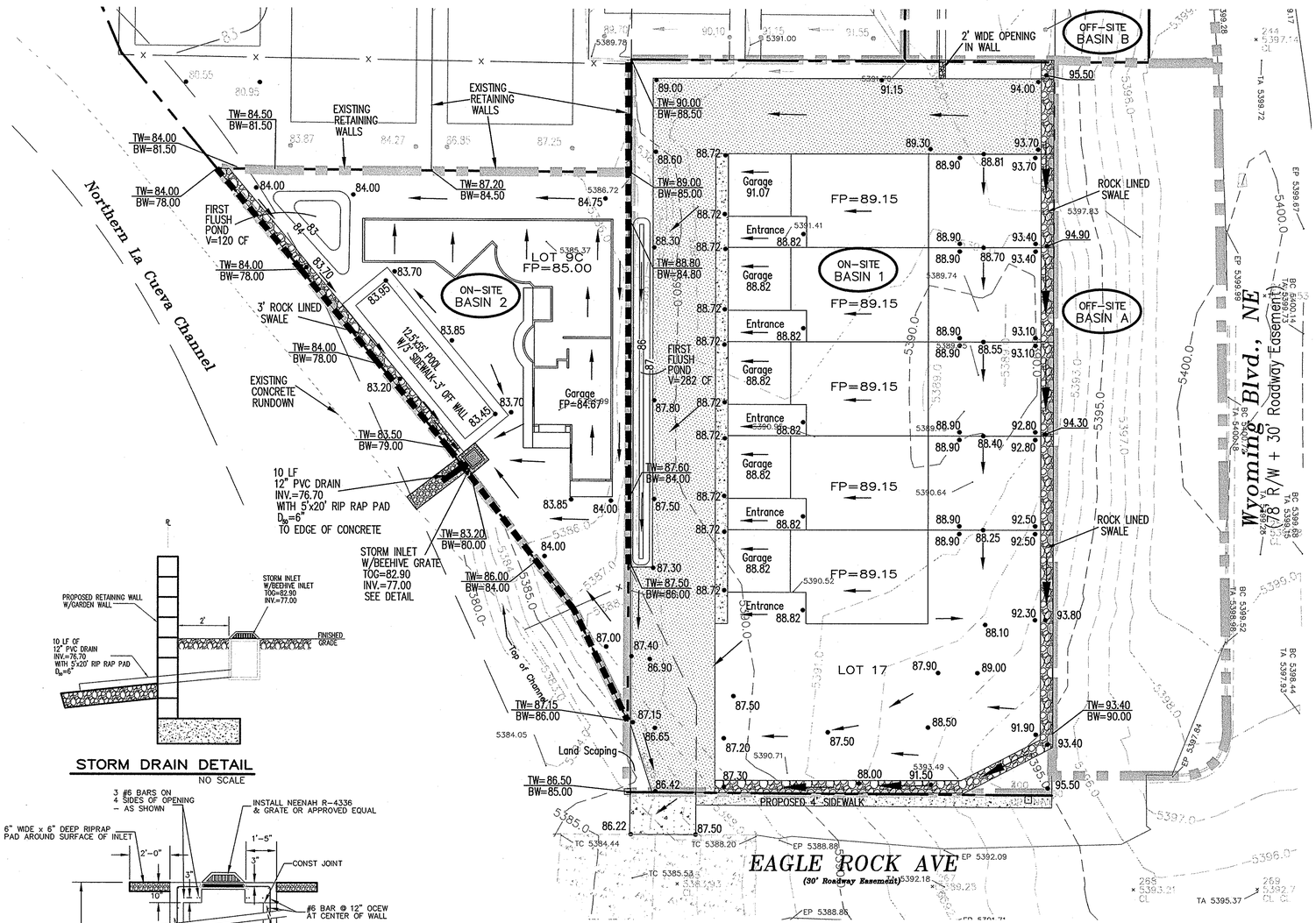

STORM DRAIN DETAIL

NO SCALE

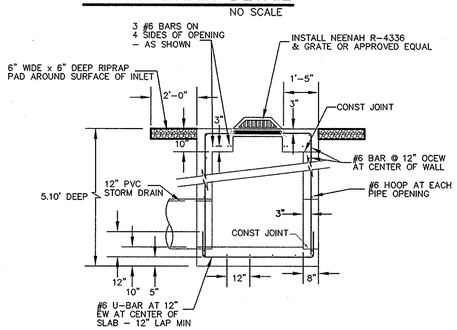

BEEHIVE INLET DETAIL

NO SCALE

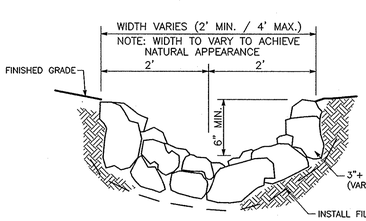

ROCK-LINED SWALE

NTS

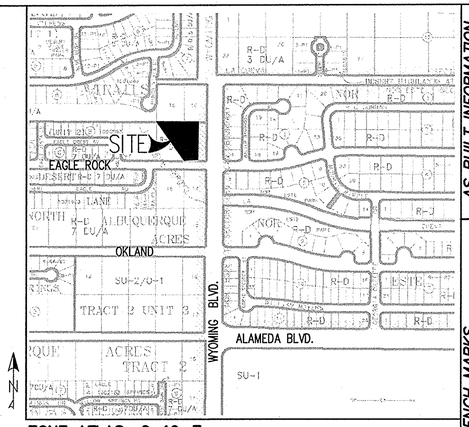

ZONE ATLAS: C-19-Z

DRAINAGE PLAN:

LEGAL DESCRIPTION: LOT 9C, LA VISTA AT DESERT RIDGE SUBDIVISION; AND LOT 17, BLOCK 1, NAA TRACT 2, UNIT 3

SITE AREA:0.97 ACRES

FLOOD HAZARD STATEMENT: F.E.M.A. FLOODWAY BOUNDARY AND FLOODWAY MAP DATED AUGUST 16, 2012 (PANEL NO. 35001C0133G & 35001C0141G) INDICATES A FLOOD HAZARD ZONE X WHICH IS AN AREA DETERMINED TO BE OUTSIDE THE 500-YEAR FLOODPLAIN. THE NORTH LA CUEVA CHANNEL AT THE SOUTHWEST CORNER HAS A FLOOD HAZARD ZONE A WITH A 1% ANNUAL CHANCE FLOOD DISCHARGE CONTAINED IN CHANNEL.

LOCATION AND DESCRIPTION: THE LOTS ARE LOCATED ON EAGLE ROCK AVENUE WEST OF WYOMING BOULEVARD. AT THE SOUTHWEST CORNER OF THE PROPERTY IS THE NORTH LA CUEVA CHANNEL.

EXISTING DRAINAGE CONDITIONS:

THE DRAINAGE ANALYSIS FOR THIS SITE IS IN ACCORDANCE WITH THE CITY OF ALBUQUERQUE DEVELOPMENT PROCESS MANUAL SECTION 22.2, HYDROLOGY. THE PROPERTY IS LOCATED IN ZONE 3. THE 100-YEAR, 6-HOUR STORM IS 2.60 INCHES.

THE SITE CURRENTLY DRAINS FROM EAST TO WEST TO THE NORTH LA CUEVA CHANNEL. CURRENTLY THERE ARE OFFSITE FLOWS FROM THE EAST AND NORTH.

DEVELOPED DRAINAGE CONDITIONS:

THERE ARE TWO OFF-SITE BASINS DRAINING ONTO LOT 17. OFF-SITE BASIN A IS DIRECTLY EAST OF LOT 17. RUNOFF FROM OFF-SITE BASIN A WILL BE COLLECTED IN A ROCK-LINED SWALE ALONG THE LOT 17 EAST PROPERTY LINE AND WILL BE DIVERTED TO A ROCK-LINED SWALE ALONG THE SOUTH PROPERTY LINE OF LOT 17 TO THE LOT 17 DRIVEWAY. THE PEAK FLOW OF 0.47 CFS WILL DISCHARGE TO EAGLE ROCK AVENUE. OFF-SITE BASIN B IS LOCATED NORTH OF LOT 17. RUNOFF FROM OFF-SITE BASIN B WILL DRAIN TO LOT 17 VIA AN OPENING IN THE WALL. THE PEAK FLOW OF 0.71 CFS WILL BE CONVEYED WITH THE ON-SITE FLOWS IN THE GRAVEL DRIVE TO THE WEST AND SOUTH OF THE RESIDENTIAL BUILDING TO BE DISCHARGED TO EAGLE ROCK AVENUE THROUGH THE DRIVEWAY AND WILL EVENTUALLY DRAIN TO THE NORTH LA CUEVA CHANNEL.

THE PROPERTY HAS BEEN DIVIDED INTO TWO ON-SITE DRAINAGE BASINS. RUNOFF FROM ON-SITE BASIN 1, WHICH INCLUDES ALL OF LOT 17, WILL BE DIRECTED TO EAGLE ROCK AVENUE THROUGH THE GRAVEL DRIVEWAY. A TOTAL OF 2.60 CFS FROM LOT 17 WILL DRAIN TO EAGLE ROCK AVENUE AND WILL DRAIN TO THE NORTH LA CUEVA CHANNEL. A TOTAL OF 3.78 CFS FROM OFF-SITE BASINS A AND B AND ON-SITE BASIN 1 WILL DRAIN THROUGH THE DRIVEWAY TO EAGLE ROCK AVENUE. THE FIRST FLUSH FROM ON-SITE BASIN 1 WILL BE RETAINED IN THE LANDSCAPED AREA WEST OF THE GRAVEL DRIVEWAY. THE FIRST FLUSH VOLUME FOR A 0.44-INCH RAIN IS 282 CUBIC-FEET.

RUNOFF FROM ON-SITE BASIN 2, WHICH INCLUDES ALL OF LOT 9C, WILL DRAIN TO A STORM INLET ALONG THE WEST PROPERTY LINE AND WILL BE DISCHARGED TO THE NORTH LA CUEVA CHANNEL THROUGH A 12 INCH PVC STORM DRAIN AT A 3 PERCENT SLOPE ONTO A RIPRAP PAD. A TOTAL OF 0.90 CFS WILL BE COLLECTED IN THE STORM INLET AND DISCHARGED TO THE CHANNEL THROUGH THE 12 INCH STORM DRAIN. USING THE MANNING'S EQUATION, FOR A PEAK FLOW OF 0.90 CFS THE 12 INCH STORM DRAIN WILL HAVE A NORMAL DEPTH OF 0.26 FEET AND VELOCITY OF 5.61 FPS. THE FIRST FLUSH FROM ON-SITE BASIN 2 WILL BE RETAINED IN THE LANDSCAPED AREA IN THE NORTHWEST CORNER OF THE PROPERTY. THE FIRST FLUSH VOLUME FOR A 0.44 INCH RAIN IS 120 CUBIC-FEET.

GRAPHIC SCALE

20 0 10 20 40 80

(IN FEET)
1 inch = 20 ft.

100-YEAR HYDROLOGIC CALCULATIONS

BASIN #	AREA (acre)	LAND TREATMENT A (%)	B (%)	C (%)	D (%)	WEIGHTED E (in)	100-YEAR PRECIPITATION V (6-hr) (acre-ft)	V (6-hr) (cu-ft)	V(24-hr) (acre-ft)	V(24-hr) (cu-ft)	Q (cfs)
EXISTING CONDITIONS											
OFF-SITE A	0.2535	100.00	0.00	0.00	0.00	0.66	0.01	607	0.01	607	0.47
OFF-SITE B	0.3790	100.00	0.00	0.00	0.00	0.66	0.02	908	0.02	908	0.71
ON-SITE 1	0.7277	100.00	0.00	0.00	0.00	0.66	0.04	1,743	0.04	1,743	1.36
ON-SITE 2	0.2436	100.00	0.00	0.00	0.00	0.66	0.01	584	0.01	584	0.46
TOTAL RUNOFF	1.60						0.09	3,842	0.09	3,842	3.00
PROPOSED CONDITIONS											
ON-SITE 1	0.7277	0.00	43.50	25.20	31.30	1.46	0.09	3,867	0.10	4,281	2.60
ON-SITE 2	0.2436	0.00	45.40	14.90	39.70	1.55	0.03	1,368	0.04	1,543	0.90
TOTAL RUNOFF	0.97						0.12	5,235	0.13	5,824	3.50
EXCESS PRECIP.		0.66	0.92	1.29	2.36	E_i (in)					
PEAK DISCHARGE		1.87	2.6	3.45	5.02	Q_{Pi} (cfs)					

WEIGHTED E (in) = $(E_A)(\%A) + (E_B)(\%B) + (E_C)(\%C) + (E_D)(\%D)$
$V_{6\text{-HR}}$ (acre-ft) = (WEIGHTED E)(AREA)/12
V_{10DAY} (acre-ft) = $V_{6\text{-HR}} + (A_D)(P_{10DAY} - P_{6\text{-HR}})/12$
Q (cfs) = $(Q_{PA})(A_A) + (Q_{PB})(A_B) + (Q_{PC})(A_C) + (Q_{PD})(A_D)$

ZONE = 3
P_{6HR} (in.) = 2.60
P_{24HR} (in.) = 3.10
P_{10DAY} (in.) = 4.90

LEGEND

FP=09.07	FINISHED PAD SITE ELEVATION
60.23	PROPOSED SPOT ELEVATION
TW=12.51 / BW=11.84	TOP OF WALL / BOTTOM OF WALL
	EXISTING MAJOR CONTOUR
	EXISTING MINOR CONTOUR
	PROPOSED RETAINING WALL
	PROPOSED MOUNTABLE CURB AND GUTTER
ON-SITE BASIN	PROPOSED BASIN NUMBER
	PROPOSED BASIN BOUNDARY
	PROPOSED CONCRETE
	PROPOSED GRAVEL
	PROPOSED RIP RAP

Thompson Engineering Consultants, Inc.
tecnm@yahoo.com
P.O. BOX 65760 PHONE: (505) 271-2199
ALBUQUERQUE, NM 87193 FAX: (505) 830-9428

CITY OF ALBUQUERQUE
PUBLIC WORKS DEPARTMENT
TRANSPORTATION DEVELOPMENT

LOT 9C, LA VISTA AT DESERT RIDGE AND
LOT 17, BLOCK 1, NAA TRACTS 2, UNIT 3
GRADING AND DRAINAGE PLAN FOR LOTS 9C & 17

DESIGN REVIEW COMMITTEE	CITY ENGINEER APPROVAL		MO./DAY/YR.	MO./DAY/YR.

City Project No.	Zone Map No.	Sheet	Of
XXXXXX	C-19-Z	1	1

AS BUILT INFORMATION
CONTRACTOR
WORK STAKED BY / INSPECTOR / ACCEPTANCE BY / FIELD VERIFICATION BY / DRAWINGS CORRECTED BY — DATE
MICRO-FILM INFORMATION
RECORDED BY — DATE
NO.

BENCH MARKS

SURVEY INFORMATION
FIELD NOTES
NO. | BY | DATE

ENGINEER'S SEAL

NO.	DATE	REMARKS	BY

DESIGN
DESIGNED BY DBT — DATE 8-2014
DRAWN BY DEM — DATE 8-2014
CHECKED BY DBT — DATE 8-2014