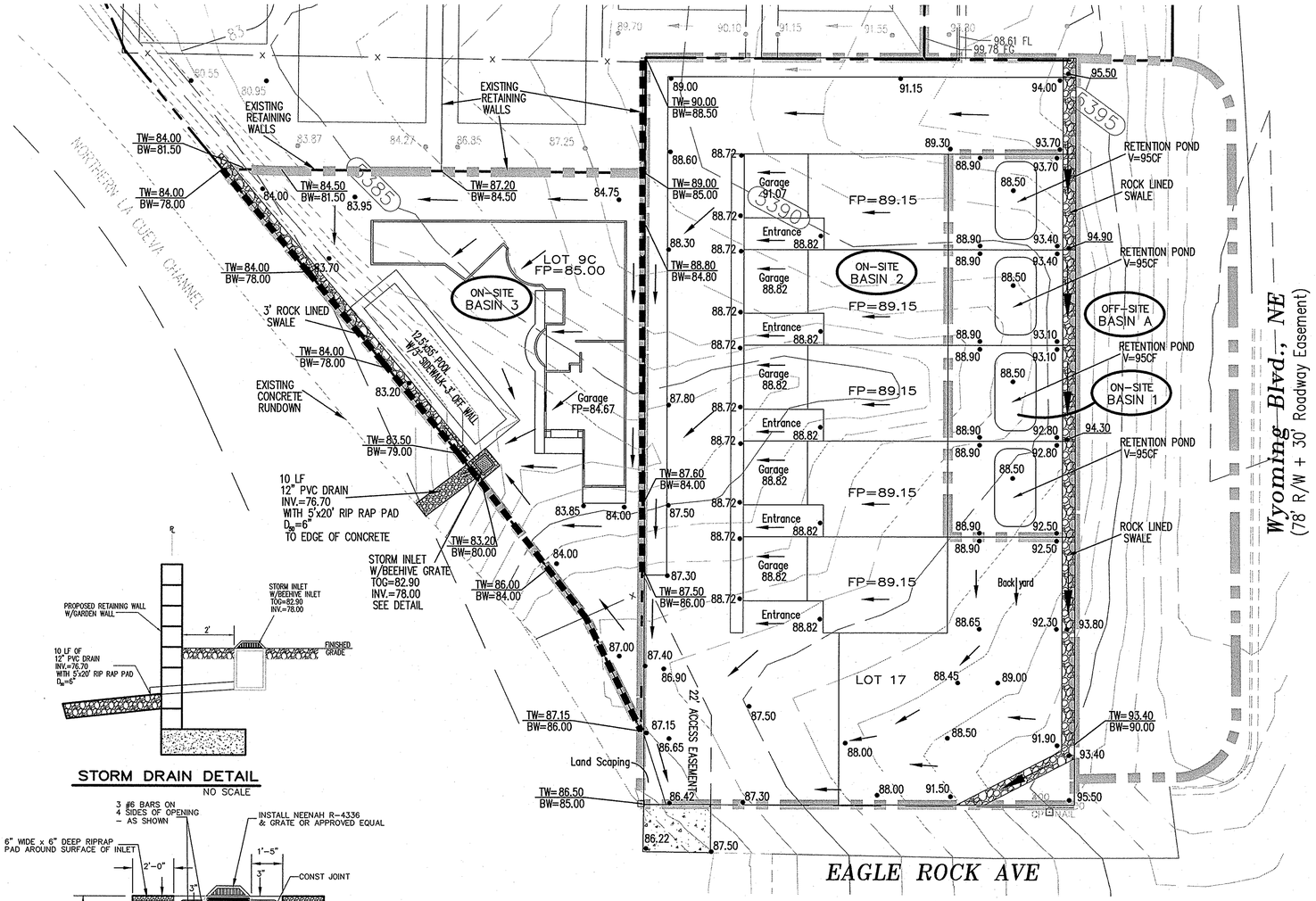

STORM DRAIN DETAIL

NO SCALE

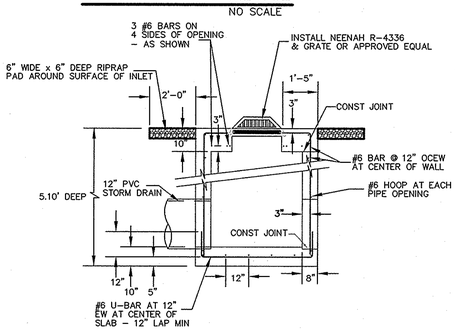

BEEHIVE INLET DETAIL

NO SCALE

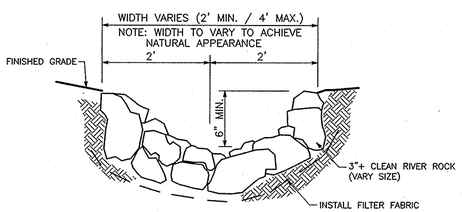

ROCK-LINED SWALE

NTS

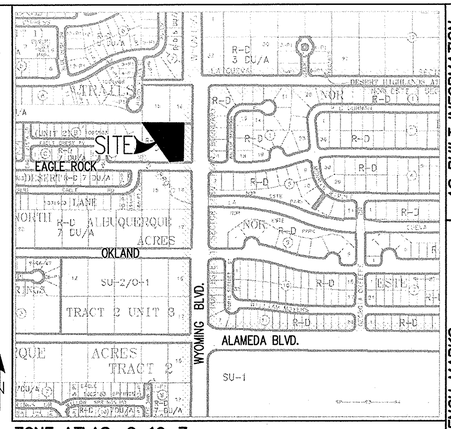

ZONE ATLAS: C-19-Z

DRAINAGE PLAN:

LEGAL DESCRIPTION: LOT 9C, LA VISTA AT DESERT RIDGE SUBDIVISION; AND LOT 17, BLOCK 1, NAA TRACT 2, UNIT 3

SITE AREA:0.97 ACRES

FLOOD HAZARD STATEMENT: F.E.M.A. FLOODWAY BOUNDARY AND FLOODWAY MAP DATED AUGUST 16, 2012 (PANEL NO. 35001C0133G & 35001C0141G) INDICATES A FLOOD HAZARD ZONE X WHICH IS AN AREA DETERMINED TO BE OUTSIDE THE 500-YEAR FLOODPLAIN. THE NORTH LA CUEVA CHANNEL AT THE SOUTHWEST CORNER HAS A FLOOD HAZARD ZONE A WITH A 1% ANNUAL CHANCE FLOOD DISCHARGE CONTAINED IN CHANNEL.

LOCATION AND DESCRIPTION: THE LOTS ARE LOCATED ON EAGLE ROCK AVENUE WEST OF WYOMING BOULEVARD. AT THE SOUTHWEST CORNER OF THE PROPERTY IS THE NORTH LA CUEVA CHANNEL.

EXISTING DRAINAGE CONDITIONS:

THE DRAINAGE ANALYSIS FOR THIS SITE IS IN ACCORDANCE WITH THE CITY OF ALBUQUERQUE DEVELOPMENT PROCESS MANUAL SECTION 22.2, HYDROLOGY. THE PROPERTY IS LOCATED IN ZONE 3. THE 100-YEAR, 6-HOUR STORM IS 2.60 INCHES.

THE SITE CURRENTLY DRAINS FROM EAST TO WEST TO THE NORTH LA CUEVA CHANNEL. CURRENTLY THERE ARE OFFSITE FLOWS FROM THE EAST.

DEVELOPED DRAINAGE CONDITIONS:

THE PROPERTY HAS BEEN DIVIDED INTO THREE ONSITE DRAINAGE BASINS AND ONE OFFSITE DRAINAGE BASIN. RUNOFF FROM OFFSITE BASIN A WILL BE COLLECTED IN A ROCK-LINED SWALE ALONG THE LOT 17 EAST PROPERTY LINE AND WILL BE DIVERTED TO EAGLE ROCK AVENUE AND WILL EVENTUALLY DRAIN TO THE NORTH LA CUEVA CHANNEL.

RUNOFF FROM THE ONSITE BASIN 1, WHICH INCLUDES THE BACKYARDS OF THE NORTHERN 4 TOWNHOMES ON LOT 17, WILL POND IN THE EACH BACKYARD. EACH POND WILL HOLD 95 CUBIC FEET OF RUNOFF. RUNOFF FROM ONSITE BASIN 2, WHICH INCLUDES THE REMAINDER OF LOT 17, WILL BE DIRECTED TO EAGLE ROCK AVENUE THROUGH THE GRAVEL DRIVEWAY. A TOTAL OF 2.31 CFS WILL DRAIN TO EAGLE ROCK AVENUE AND WILL DRAIN TO THE NORTH LA CUEVA CHANNEL. RUNOFF FROM ONSITE BASIN 3, WHICH INCLUDES ALL OF LOT 9C, WILL DRAIN TO A STORM INLET ALONG THE WEST PROPERTY LINE WILL BE DISCHARGED TO THE NORTH LA CUEVA CHANNEL THROUGH A 12" PVC STORM DRAIN ONTO A RIPRAP PAD TO THE NORTH LA CUEVA CHANNEL. A TOTAL OF 0.90 CFS WILL BE COLLECTED IN THE STORM INLET AND EILL BE DISCHARGED TO THE CHANNEL.

100-YEAR HYDROLOGIC CALCULATIONS

BASIN #	AREA (acre)	LAND TREATMENT A (%)	B (%)	C (%)	D (%)	WEIGHTED E (in)	100-YEAR PRECIPITATION V (6-hr) (acre-ft)	V (6-hr) (cu-ft)	V(24-hr) (acre-ft)	V(24-hr) (cu-ft)	Q (cfs)
EXISTING CONDITIONS											
OFF-SITE A	0.2535	100.00	0.00	0.00	0.00	0.66	0.01	607	0.01	607	0.47
ON-SITE 1	0.1102	100.00	0.00	0.00	0.00	0.66	0.01	264	0.01	264	0.21
ON-SITE 2	0.6175	100.00	0.00	0.00	0.00	0.66	0.03	1,479	0.03	1,479	1.15
ON-SITE 3	0.2436	100.00	0.00	0.00	0.00	0.66	0.01	584	0.01	584	0.46
TOTAL RUNOFF	1.22						0.07	2,934	0.07	2,934	2.29
PROPOSED CONDITIONS											
ON-SITE 1	0.1102	0.00	92.50	7.50	0.00	0.95	0.01	379	0.01	379	0.29
ON-SITE 2	0.6175	0.00	34.70	28.30	37.00	1.56	0.08	3,491	0.09	3,906	2.31
ON-SITE 3	0.2436	0.00	45.40	14.90	39.70	1.55	0.03	1,368	0.04	1,543	0.90
TOTAL RUNOFF	0.97						0.12	5,238	0.13	5,828	3.50
EXCESS PRECIP.		0.66	0.92	1.29	2.36	E (in)					
PEAK DISCHARGE		1.87	2.6	3.45	5.02	Q (cfs)					

ZONE = 3

WEIGHTED E (in) = (E·)(%A) + (E·)(%B) + (E·)(%C) + (E·)(%D) — P·· (in.) = 2.60

V·· (acre-ft) = (WEIGHTED E)(AREA)/12 — P··· (in.) = 3.10

V···· (acre-ft) = V·· + (A·)(P···· - P··)/12 — P···· (in.) = 4.90

Q (cfs) = (Q··)(A·) + (Q·)(A·) + (Q·)(A·) + (Q·)(A·)

LEGEND

FP=09.07	FINISHED PAD SITE ELEVATION
60.23	PROPOSED SPOT ELEVATION
TW=12.51 / BW=11.84	TOP OF WALL / BOTTOM OF WALL
	EXISTING MAJOR CONTOUR
	EXISTING MINOR CONTOUR
	PROPOSED RETAINING WALL
	PROPOSED MOUNTABLE CURB AND GUTTER
ON-SITE BASIN	PROPOSED BASIN NUMBER
	PROPOSED BASIN BOUNDARY
	PROPOSED WHEEL CHAIR RAMPS

GRAPHIC SCALE

20 0 10 20 40 80

(IN FEET)
1 inch = 20 ft.

Thompson Engineering Consultants, Inc.
tecnm@yahoo.com
P.O. BOX 65760 ALBUQUERQUE, NM 87193
PHONE: (505) 271-2199
FAX: (505) 830-9428

AS BUILT INFORMATION

CONTRACTOR | DATE
WORK STAKED BY | DATE
STAKING CHECKS ACCEPTANCE BY | DATE
CERTIFICATION BY | DATE
DRAWINGS CHECKED BY | DATE
MICRO-FILM INFORMATION
RECORDED BY | DATE
NO.

BENCH MARKS

SURVEY INFORMATION
FIELD NOTES

NO.	BY	DATE

ENGINEER'S SEAL

NO.	DATE	REMARKS	BY

DESIGN

DESIGNED BY	DBT	DATE 6-2014
DRAWN BY	DEM	DATE 6-2014
CHECKED BY	DBT	DATE 6-2014

CITY OF ALBUQUERQUE
PUBLIC WORKS DEPARTMENT
TRANSPORTATION DEVELOPMENT

LOT 9C, LA VISTA AT DESERT RIDGE AND
LOT 17, BLOCK 1, NAA TRACTS 2, UNIT 3
GRADING AND DRAINAGE PLAN FOR LOTS 11 & 17

DESIGN REVIEW COMMITTEE	CITY ENGINEER APPROVAL		MO./DAY/YR.	MO./DAY/YR.

City Project No.	Zone Map No.	Sheet	Of
XXXXXX	C-19-Z	1	1