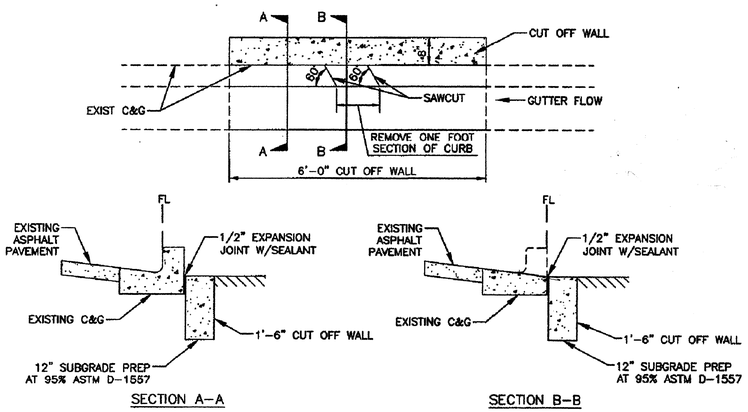

CURB CUT DETAIL

SCALE: NTS

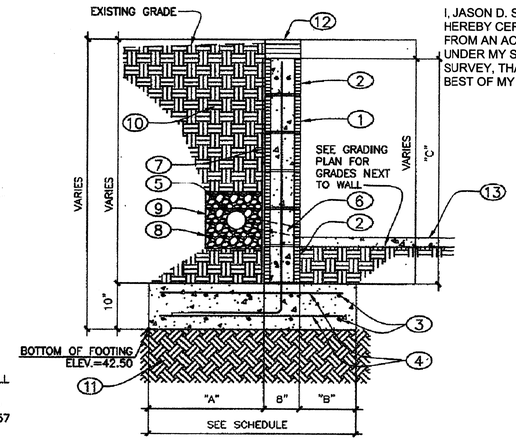

TYPICAL RETAINING WALL SECTION

NTS

I, JASON D. SMITH , NEW MEXICO PROFESSIONAL SURVEYOR, HEREBY CERTIFY THAT THIS AS-BUILT SURVEY WAS PREPARED FROM AN ACTUAL GROUND SURVEY PERFORMED BY ME OR UNDER MY SUPERVISION, THAT I AM RESPONSIBLE FOR THIS SURVEY, THAT THIS SURVEY IS TRUE AND CORRECT TO THE BEST OF MY KNOWLEDGE AND BELIEF.

RETAINING WALL SCHEDULE		
"C"	0 TO 2'-0"	2'-1" TO 4'-0"
"A"	1'-6"	1'-8"
"B"	0'-8"	0'-8"
TOTAL WIDTH	2'-10"	3'-0"
FOOTING REINFORCING	(3)#4 CONT. TOP & BOTT W/#5 TRANS. AT 16"O.C. TOP & BOTT.	(3)#4 CONT. TOP & BOTT W/#5 TRANS. AT 16"O.C. TOP & BOTT.
CMU REINFORCING (VERT.)	#5 AT 48"O.C.	#5 AT 32"O.C.
CMU REINFORCING (LAT.)	(1)#5 IN CONT. 8" DEEP BOND BEAM AT TOP & BOTT. OF WALL	(1)#5 IN CONT. 8" DEEP BOND BEAM AT TOP & BOTT. OF WALL

RETAINING WALL KEYED NOTES:

1. GROUT CMU WALL AT CELLS WITH VERT. REINF. W/#9 LADDER TYPE REINFORCING AT EACH JOINT. SEE SCHEDULE.
2. CONT. BOND BEAM, SEE SCHEDULE.
3. CONTINUOUS REINFORCING TOP & BOTTOM. SEE SCHEDULE.
4. TRANSVERSE REINFORCING TOP & BOTTOM. SEE SCHEDULE.
5. 4" DIAMETER PERFORATED PVC CONTINUOUS, 1/2"ø PERFORATIONS @ 90' INTERVALS AROUND PIPE @ 1' O.C. USE FOR WALLS MORE THAN 2 FEET HIGH.
6. 2" DIAMETER PVC WEEP HOLES. SEE LOCATION IN PROFILE BELOW.
7. 4 MIL VAPOR BARRIER.
8. FILTER FABRIC AROUND GRAVEL.
9. 3/4" ROUND GRAVEL.
10. BACKFILL
11. 12" SUBGRADE @ 95% ASTM D-1557.
12. 4" CAP BLOCK.
13. CONCRETE SIDEWALK

SITE PLAN KEYED NOTES:

1. CONSTRUCT 4" CONCRETE SIDEWALK, 8 FEET WIDE.
2. CONSTRUCT RETAINING WALL. SEE SECTION AND PROFILE THIS SHEET.
3. SEE STRUCTURAL DRAWINGS FOR WALLS AND CONCRETE PAD.
4. CONSTRUCT HEADER CURB PER COA STD. DWG 2415B. TRAFFIC SIDE TOWARDS TENNIS COURT.
5. REMOVE EXISTING WIRE FENCE.
6. CONSTRUCT 6' WIDE CONCRETE SIDEWALK. SEE LANDSCAPE PLANS FOR DETAILS AND EXTENT OF INSTALLATION.
7. CURB CUT. SEE DETAIL THIS SHEET.

RETAINING WALL PROFILE

SCALE: 1"=2'

LEGEND

TC	TOP OF CONCRETE
TG	TOP OF GROUND
FL	FLOWLINE

DRAINAGE CERTIFICATION

I, George Nemeth, NMPE #12284, OF THE FIRM Smith Engineering Company, HEREBY CERTIFY THAT THIS PROJECT HAS BEEN GRADED AND WILL DRAIN IN SUBSTANTIAL COMPLIANCE WITH AND IN ACCORDANCE WITH THE DESIGN INTENT OF THE APPROVED PLAN WITH ENGINEER'S SEAL DATED 7-19-13. THE RECORD INFORMATION EDITED ONTO THE ORIGINAL DESIGN DOCUMENT HAS BEEN OBTAINED BY Jason D. Smith, NMLS #17123, OF THE FIRM Longhorn Construction Services. I FURTHER CERTIFY THAT I HAVE PERSONALLY VISITED THE PROJECT SITE ON 11-21-14 AND HAVE DETERMINED, BY VISUAL INSPECTION, THAT THE SURVEY DATA PROVIDED IS REPRESENTATIVE OF ACTUAL SITE CONDITIONS AND IS TRUE AND CORRECT TO THE BEST OF MY KNOWLEDGE AND BELIEF. THIS CERTIFICATION IS SUBMITTED IN SUPPORT OF A REQUEST FOR Certificate of Occupancy.

THE RECORD INFORMATION PRESENTED HEREON IS NOT NECESSARILY COMPLETE AND INTENDED ONLY TO VERIFYSUBSTANTIAL COMPLIANCE OF THE GRADING AND DRAINAGE ASPECTS OF THIS PROJECT. THOSE RELYING ON THIS RECORD DOCUMENT ARE ADVISED TO OBTAIN INDEPENDENT VERIFICATION OF ITS ACCURACY BEFORE USING IT FOR ANY OTHER PURPOSE.

= 20'

40 60 Feet

George Nemeth, NMPE 12284

GEORGE NEMETH NEW MEXICO 12284 REGISTERED PROFESSIONAL ENGINEER 12-18-14

SEC JOB # 112659

SMITH ENGINEERING COMPANY — SOLUTIONS FOR TODAY... VISION FOR TOMORROW — 2391 San Pedro Dr. NE, Building 4, Suite 200, Albuquerque, NM 87110, Phone: (505) 884-0709, Fax: (505) 884-8376, TEXOLP

CONSENSUS PLANNING, INC.
Planning / Landscape Architecture
302 Eighth Street NW
Albuquerque, NM 87102
(505) 764-9801 Fax 842-5495
e-mail: cp@consensusplanning.com

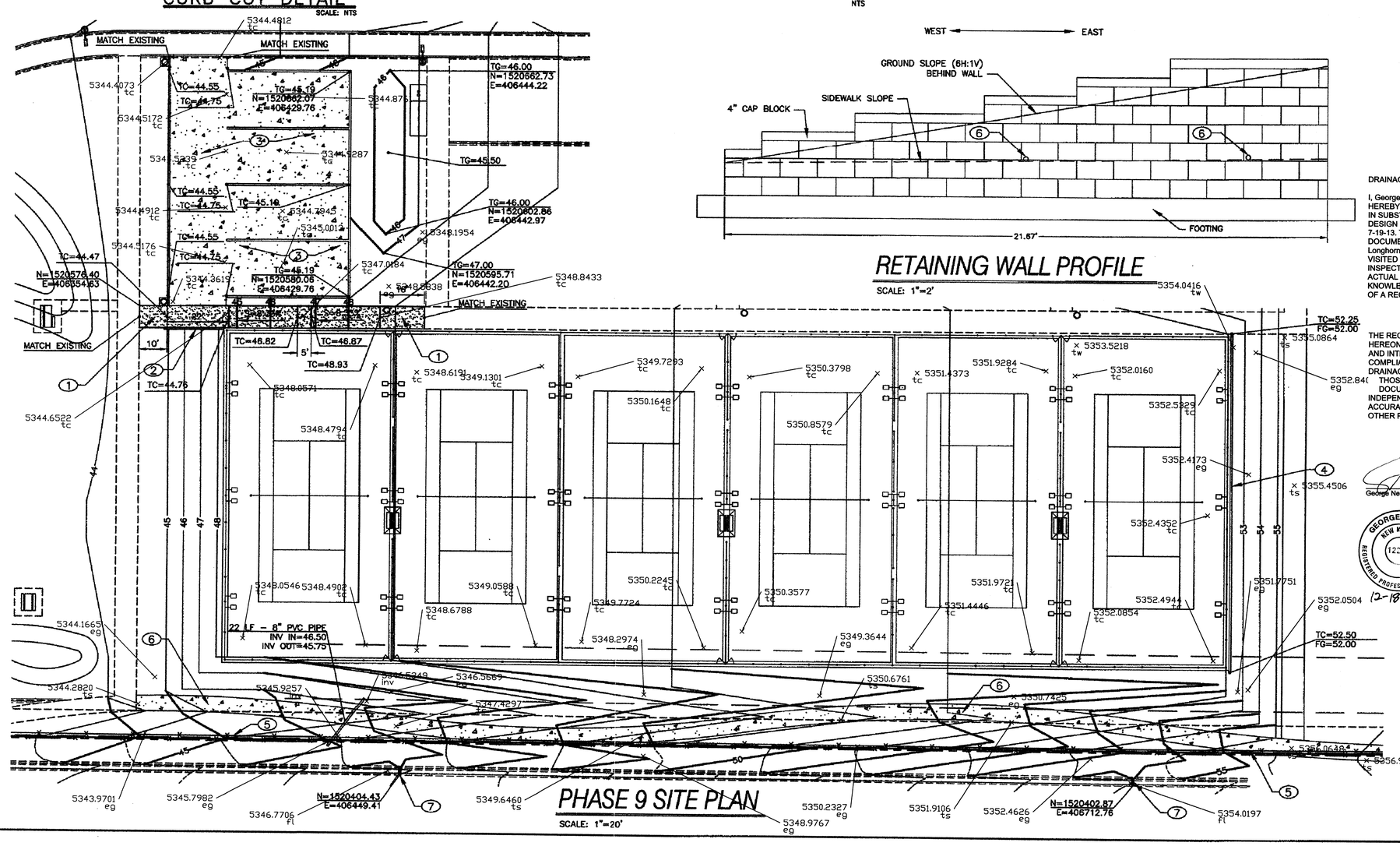

PHASE 9 SITE PLAN

SCALE: 1"=20'

AS BUILT INFORMATION — CONTRACTOR — WORK SUPERVISED BY — INSPECTOR'S ACCEPTANCE BY — VERIFICATION BY — DRAWINGS REVIEWED BY — DATE — MICRO-FILM INFORMATION — RECORDED BY — DATE — NO.

BENCH MARKS

SURVEY INFORMATION — FIELD NOTES — BY — DATE — NO.

ENGINEERS SEAL — GEORGE NEMETH NEW MEXICO 12284 REGISTERED PROFESSIONAL ENGINEER — 7-19-13 — RECEIVED JUL 16 2014 LANDDEVELOPMENT SECTION

NO.	DATE	REMARKS	BY
		REVISIONS	

DESIGN — DESIGNED BY G. NEMETH DATE 7/2013 — DRAWN BY SEC DATE 7/2013 — CHECKED BY G. NEMETH DATE 7/2013

FINAL FOR CONSTRUCTION

NORTH DOMINGO BACA PARK PHASE 9 RECREATION FIELD

PROJECT #713897 JULY, 2013

RECORD DRAWINGS

CITY OF ALBUQUERQUE
PARKS AND RECREATION DEPARTMENT
STRATEGIC PLANNING AND DESIGN

TITLE: NORTH DOMINGO BACA PARK - PHASE 9

RACQUET BALL COURT SITE PLAN

Design Review Committee | City Engineer Approval | Last Design Update | No. / Day / Yr. | No. / Day / Yr.

City Project No. 713897 | Zone Map No. C-19 | Sheet 5 Of 14

\\T110\Data\WORK\construction\tennis court\NDBP Phase 9_TENNIS_for Surveyor - Standard\Drawing2.dwg

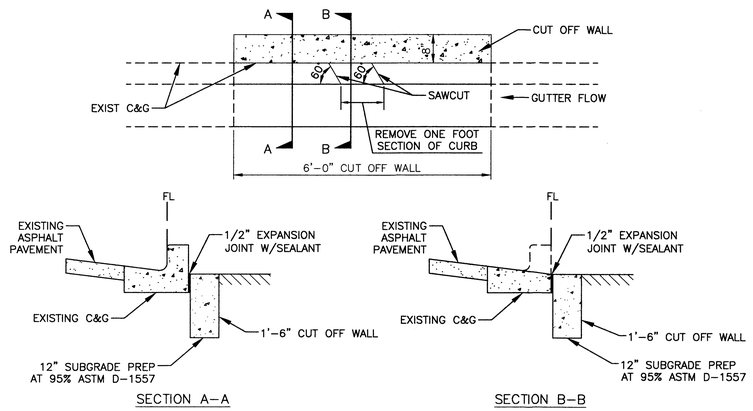

CURB CUT DETAIL

SCALE: NTS

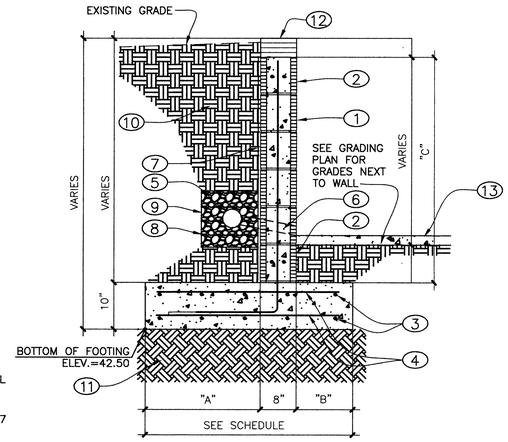

TYPICAL RETAINING WALL SECTION

NTS

RETAINING WALL SCHEDULE		
"C"	0 TO 2'-0"	2'-1" TO 4'-0"
"A"	1'-6"	1'-8"
"B"	0'-8"	0'-8"
TOTAL WIDTH	2'-10"	3'-0"
FOOTING REINFORCING	(3)#4 CONT. TOP & BOTT W/#5 TRANS. AT 16"O.C. TOP & BOTT.	(3)#4 CONT. TOP & BOTT W/#5 TRANS. AT 16"O.C. TOP & BOTT.
CMU REINFORCING (VERT.)	#5 AT 48"O.C.	#5 AT 32"O.C.
CMU REINFORCING (LAT.)	(1)#5 IN CONT. 8" DEEP BOND BEAM AT TOP & BOTT. OF WALL	(1)#5 IN CONT. 8" DEEP BOND BEAM AT TOP & BOTT. OF WALL

RETAINING WALL KEYED NOTES:

1. GROUT CMU WALL AT CELLS WITH VERT. REINF. W/#9 LADDER TYPE REINFORCING AT EACH JOINT. SEE SCHEDULE.
2. CONT. BOND BEAM, SEE SCHEDULE.
3. CONTINUOUS REINFORCING TOP & BOTTOM. SEE SCHEDULE.
4. TRANSVERSE REINFORCING TOP & BOTTOM. SEE SCHEDULE.
5. 4" DIAMETER PERFORATED PVC CONTINUOUS, 1/2"ø PERFORATIONS @ 90° INTERVALS AROUND PIPE @ 1' O.C. USE FOR WALLS MORE THAN 2 FEET HIGH.
6. 2" DIAMETER PVC WEEP HOLES. SEE LOCATION IN PROFILE BELOW.
7. 4 MIL VAPOR BARRIER.
8. FILTER FABRIC AROUND GRAVEL.
9. 3/4" ROUND GRAVEL.
10. BACKFILL
11. 12" SUBGRADE @ 95% ASTM D-1557.
12. 4" CAP BLOCK.
13. CONCRETE SIDEWALK

DRAINAGE NOTES:

THE NORTH DOMINGO BACA PARK MASTER PLAN DRAINAGE REPORT (NOVEMEBR 2004) WAS APPROVED BY THE COA IN JANUARY 2005. THE CONSTRUCTION IN THIS PHASE 9 IS INCLUDED IN A PORTION OF THE APPROVED MASTER PLAN DRAINAGE BASINS 9 (7.55 CFS) AND 10 (14.17 CFS).

COMPARING THE LAND USE TYPES IN THE MASTER PLAN (MP) TO THE FINAL CONSTRUCTION (FC) WITHIN BASINS 9 AND 10, WE HAVE:

TYPE	MP ACRES	FC ACRES
B	0.89	2.05
C	0.37	0.15
D	3.62	2.87

SINCE THERE IS CONSIDERABLY MORE GRASS AND LESS PAVEMENT, RUNOFF IS SIGNIFICANTLY LESS FOR THE AS-CONSTRUCTED CONDITION.

THE COMPUTED 100-YEAR STORM RUNOFF FOR BASINS 9 AND 10 IS:
MASTER PLAN Q = 21.72 CFS
FINAL CONSTRUCTION Q = 7.60 CFS

THE DRAINAGE PATTERN REMAINS UNCHANGED FROM THE MASTER PLAN. RUNOFF IS FROM EAST TO WEST AND EVENTUALLY DISCHARGES INTO THE KINNEY DAM POOL.

SITE PLAN KEYED NOTES:

1. CONSTRUCT 4" CONCRETE SIDEWALK, 8 FEET WIDE.
2. CONSTRUCT RETAINING WALL. SEE SECTION AND PROFILE THIS SHEET.
3. SEE STRUCTURAL DRAWINGS FOR WALLS AND CONCRETE PAD.
4. CONSTRUCT HEADER CURB PER COA STD. DWG 2415B. TRAFFIC SIDE TOWARDS TENNIS COURT.
5. REMOVE EXISTING WIRE FENCE.
6. CONSTRUCT 6' WIDE CONCRETE SIDEWALK. SEE LANDSCAPE PLANS FOR DETAILS AND EXTENT OF INSTALLATION.
7. CURB CUT. SEE DETAIL THIS SHEET.

RETAINING WALL PROFILE

SCALE: 1"=2'

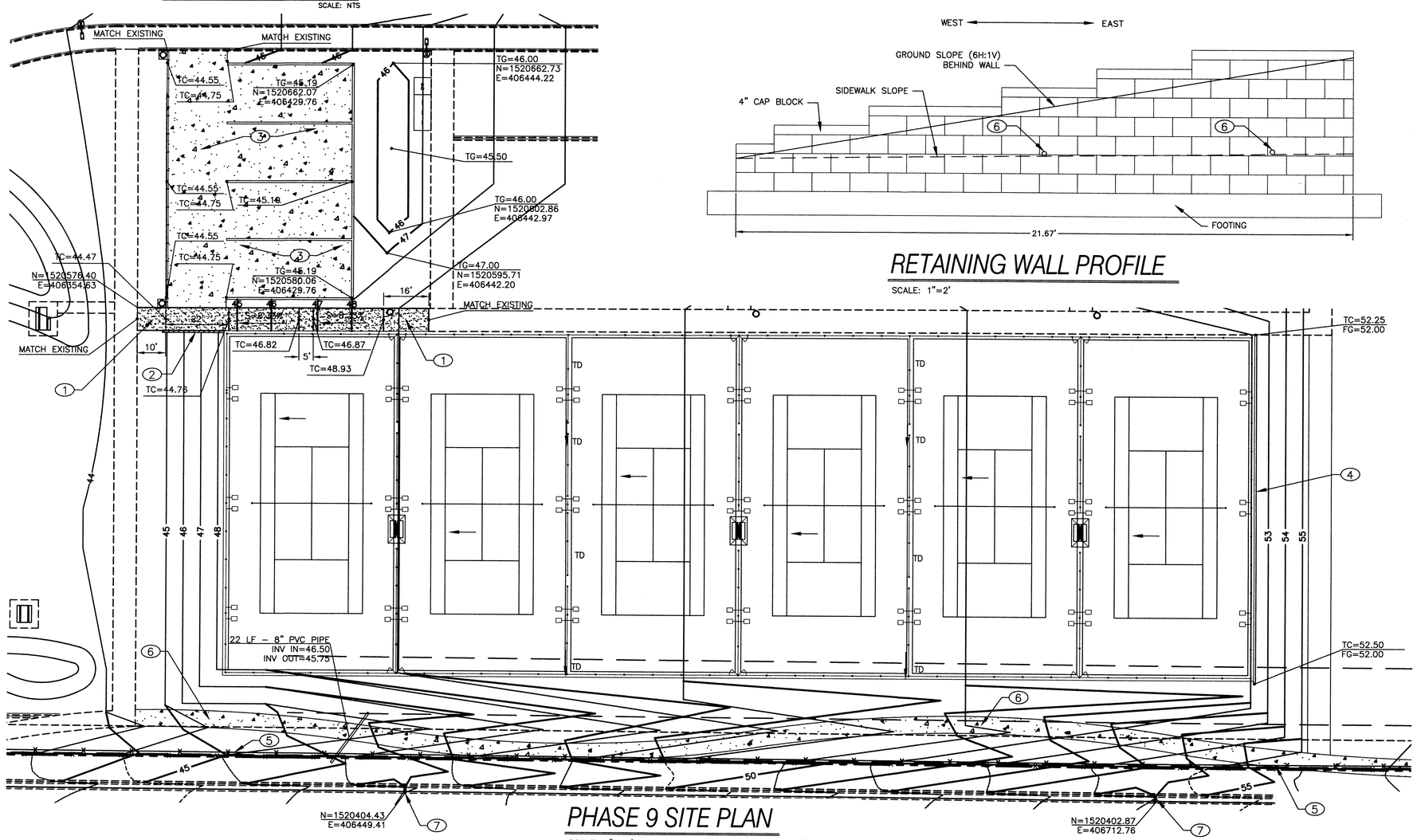

PHASE 9 SITE PLAN

SCALE: 1"=20'

LEGEND

TC	TOP OF CONCRETE
TG	TOP OF GROUND
FL	FLOWLINE
TD	TRENCH DRAIN
←	FLOW DIRECTION

SCALE: 1" = 20'

20 0 20 40 60 Feet

SEC JOB # 112659

SMITH ENGINEERING COMPANY
SOLUTIONS FOR TODAY... VISION FOR TOMORROW
2391 San Pedro Dr. NE
Building 4, Suite 200
Albuquerque, NM 87110
Phone: (505) 884-0700
Fax: (505) 884-2376
NEW MEXICO TEXAS

CONSENSUS PLANNING
CONSENSUS PLANNING, INC.
Planning / Landscape Architecture
302 Eighth Street NW
Albuquerque, NM 87102
(505) 764-9801 Fax 842-5495
e-mail: cp@consensusplanning.com

CITY OF ALBUQUERQUE
PARKS AND RECREATION DEPARTMENT
STRATEGIC PLANNING AND DESIGN

RECEIVED SEP 18 2013 LAND DEVELOPMENT SECTION

TITLE: NORTH DOMINGO BACA PARK - PHASE 9
RACQUET BALL COURT SITE PLAN

Design Review Committee	City Engineer Approval	Last Design Update	No. / Day / Yr.	No. / Day / Yr.

City Project No.	Zone Map No.	Sheet	Of
713897	C-19	5	14

AS BUILT INFORMATION
CONTRACTOR
WORK STAKED BY — DATE
INSPECTORS ACCEPTANCE BY — DATE
FIELD VERIFICATION BY — DATE
DRAWINGS CORRECTED BY — DATE
MICRO-FILM INFORMATION
RECORDED BY — DATE
NO.

BENCH MARKS

SURVEY INFORMATION
FIELD NOTES
NO. | BY | DATE

ENGINEERS SEAL
GEORGE NEMETH NEW MEXICO 12284 REGISTERED PROFESSIONAL ENGINEER
9-18-13

NO.	DATE	REMARKS	BY

REVISIONS

DESIGN
DESIGNED BY G.NEMETH — DATE 7/2013
DRAWN BY SEC — DATE 7/2013
CHECKED BY G.NEMETH — DATE 7/2013

FINAL FOR CONSTRUCTION

NORTH DOMINGO BACA PARK
PHASE 9 RECREATION FIELD

PROJECT #713897
JULY, 2013

RECORD DRAWINGS

CONTROL POINT INFORMATION

POINT	NORTHING	EASTING	ELEVATION	DESCRIPTOR	GENERAL LOCATION
CP-50	1520908.88	407671.10	5390.01	MAG NAIL W/WASHER "CONTROL POINT NMPS 11599"	WYOMING BETWEEN CARMEL AND CORONA
CP-51	1520404.75	406931.13	5360.48	MAG NAIL W/WASHER "CONTROL POINT NMPS 11599"	CARMEL BETWEEN WYOMING AND LOUISIANA
PP-106	1520313.33	407756.79	5389.01	MAG NAIL W/WASHER "CONTROL POINT NMPS 11599"	WYOMING AND CARMEL

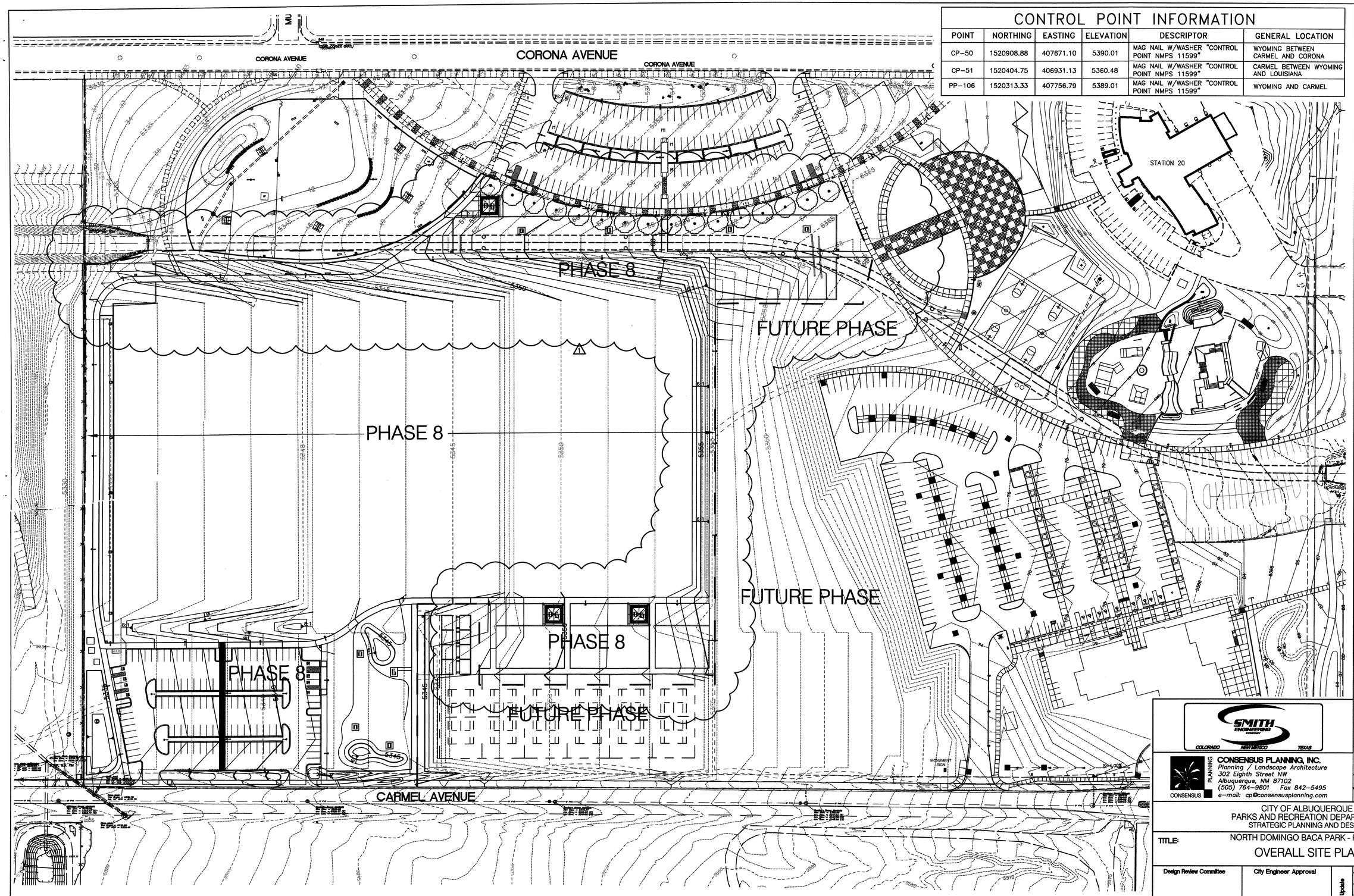

SITE PLAN

RECEIVED
MAR 22 2012
HYDROLOGY SECTION

NORTH
Scale: 1" = 60'
30 0 60 120

AS BUILT INFORMATION
CONTRACTOR
WORK STAKED BY DATE
INSPECTOR'S ACCEPTANCE BY DATE
FIELD VERIFICATION BY DATE
DRAWINGS CORRECTED BY DATE
MICRO-FILM INFORMATION
RECORDED BY DATE
NO.

BENCH MARKS
U.S. COAST & GEODETIC SURVEY TRIANGULATION STATION "HEAVEN". STANDARD USC&GS BRASS CAP IN CONCRETE STAMPED "HEAVEN 1969". BRASS CAP IS SUBSURFACE MONUMENT FOR THE ORIGINAL STATION "HEAVEN". STATION IS LOCATED SOUTH SIDE PASEO DEL NORTE, 325 FEET +/- WEST OF WYOMING AT BACK OF SIDEWALK.

SURVEY INFORMATION
FIELD NOTES

NO.	BY	DATE
11599	SURVEYING CONTROL INC.	10/2010

ENGINEERS SEAL
GEORGE NEMETH NEW MEXICO 12284 REGISTERED PROFESSIONAL ENGINEER
2-16-12

NO.	DATE	REMARKS	BY
1	2/12	REVISIONS DUE TO SIDEWALK CHANGE	GN

REVISIONS
DESIGN
DESIGNED BY PJC DATE 12/12
DRAWN BY SEC DATE 12/12
CHECKED BY GN DATE 12/12

SMITH ENGINEERING COMPANY
COLORADO NEW MEXICO TEXAS

CONSENSUS PLANNING
CONSENSUS PLANNING, INC.
Planning / Landscape Architecture
302 Eighth Street NW
Albuquerque, NM 87102
(505) 764-9801 Fax 842-5495
e-mail: cp@consensusplanning.com

CITY OF ALBUQUERQUE
PARKS AND RECREATION DEPARTMENT
STRATEGIC PLANNING AND DESIGN

TITLE: NORTH DOMINGO BACA PARK - PHASE 8
OVERALL SITE PLAN

Design Review Committee	City Engineer Approval	Last Design Update	Mo. / Day / Yr.	Mo. / Day / Yr.

City Project No.	Zone Map No.	Sheet
713897	C-19	C1

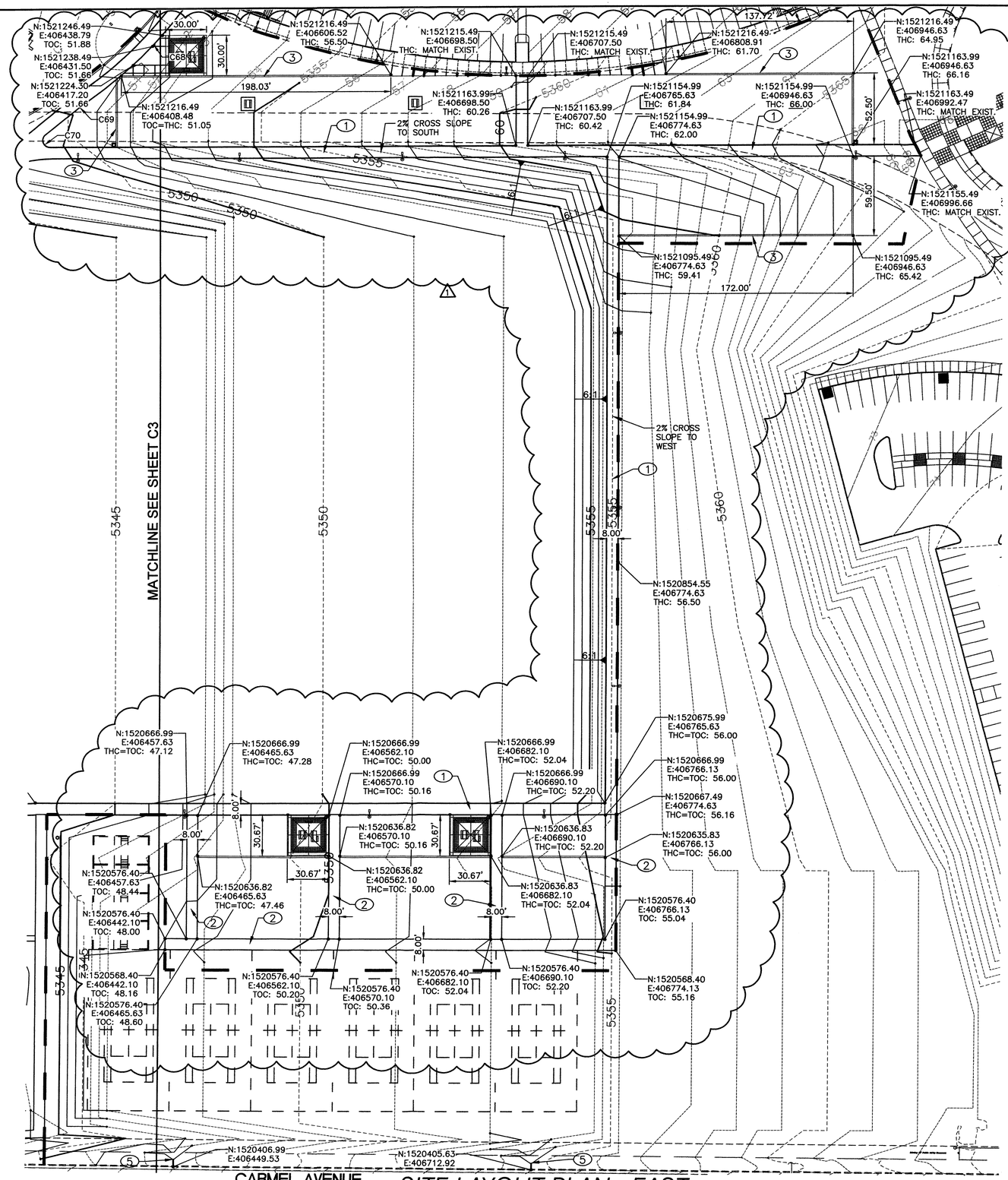

SITE LAYOUT PLAN - EAST

GENERAL NOTES:

1. SEE SHEET C10 FOR CURVE DATA.

KEYED NOTES:

1. BUILD ASPHALT SIDEWALK. SEE LANDSCAPE PLANS FOR DETAIL.
2. BUILD CONCRETE SIDEWALK. SEE LANDSCAPE PLANS FOR DETAIL.
3. BUILD HEADER CURB. SEE LANDSCAPE PLANS FOR DETAIL.
4. NOT USED.
5. CUT CURB TO DRAIN INTO SWALE. SEE DETAIL ON SHEET C7.

LEGEND

PHASE 8 BOUNDARY	
FL	FLOWLINE
TC	TOP OF CURB
THC	TOP OF HEADER CURB
TOC	TOP OF CONCRETE
N	NORTHING
E	EASTING
C	CURVE

RECEIVED
MAR 2 2 2012
HYDROLOGY SECTION

NORTH
Scale: 1" = 40'
20 0 40 80

AS BUILT INFORMATION

CONTRACTOR	DATE
WORK STAKED BY	
INSPECTOR'S ACCEPTANCE BY	DATE
FIELD VERIFICATION BY	DATE
DRAWINGS CORRECTED BY	DATE

MICRO-FILM INFORMATION

RECORDED BY DATE
NO.

BENCH MARKS

U.S. COAST & GEODETIC SURVEY TRIANGULATION STATION "HEAVEN". STANDARD USC&GS BRASS CAP IN CONCRETE STAMPED "HEAVEN 1969". BRASS CAP IS SUBSURFACE MONUMENT FOR THE ORIGINAL STATION "HEAVEN". STATION IS LOCATED SOUTH SIDE PASEO DEL NORTE, 325 FEET +/- WEST OF WYOMING AT BACK OF SIDEWALK.

SURVEY INFORMATION

FIELD NOTES

NO.	BY	DATE
11599	SURVEYING CONTROL, INC.	10/2010

ENGINEERS SEAL

GEORGE NEMER NEW MEXICO 12284 REGISTERED PROFESSIONAL ENGINEER
2-16-12

NO.	DATE	REVISIONS DUE TO SIDEWALK CHANGE	GN
1	2/12		

REVISIONS

REMARKS	BY	DATE
DESIGN		
DESIGNED BY PJC		DATE 12/12
DRAWN BY SEC		DATE 12/12
CHECKED BY GN		DATE 12/12

SMITH ENGINEERING COMPANY
COLORADO NEW MEXICO TEXAS

CONSENSUS PLANNING
CONSENSUS PLANNING, INC.
Planning / Landscape Architecture
302 Eighth Street NW
Albuquerque, NM 87102
(505) 764-9801 Fax 842-5495
e-mail: cp@consensusplanning.com

CITY OF ALBUQUERQUE
PARKS AND RECREATION DEPARTMENT
STRATEGIC PLANNING AND DESIGN

TITLE: NORTH DOMINGO BACA PARK - PHASE 8

SITE LAYOUT PLAN - EAST

Design Review Committee	City Engineer Approval	Last Design Update	Mo. / Day / Yr.	Mo. / Day / Yr.

City Project No.	Zone Map No.	Sheet
713897	C-19	C2

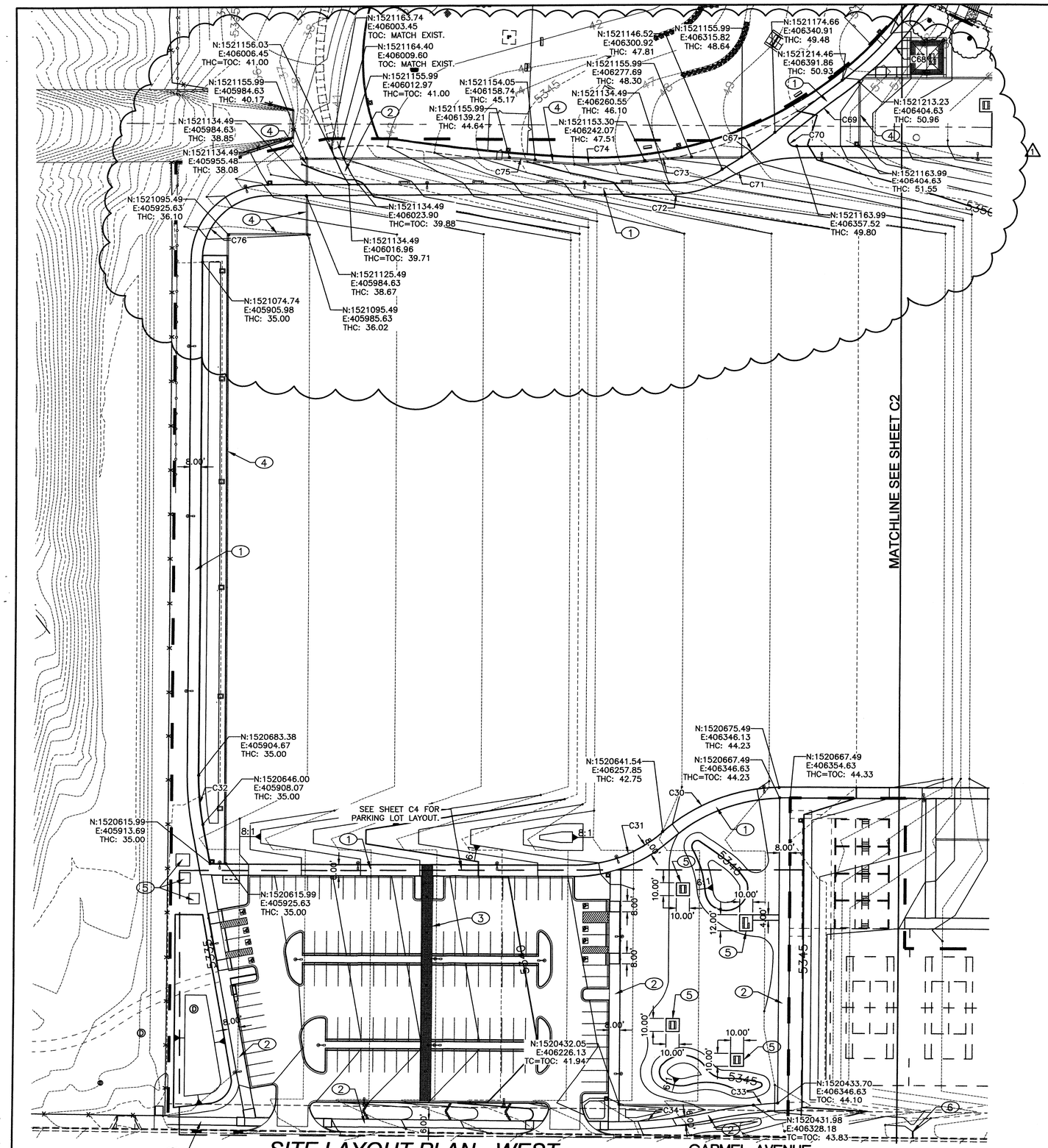

SITE LAYOUT PLAN - WEST

CARMEL AVENUE

GENERAL NOTES:

1. SEE SHEET C10 FOR CURVE DATA.

KEYED NOTES:

1. BUILD ASPHALT SIDEWALK. SEE LANDSCAPE PLANS FOR DETAIL.
2. BUILD CONCRETE SIDEWALK. SEE LANDSCAPE PLANS FOR DETAIL.
3. BUILD PATTERNED CONCRETE SIDEWALK. SEE LANDSCAPE PLANS FOR DETAIL.
4. BUILD HEADER CURB. SEE LANDSCAPE PLANS FOR DETAIL.
5. BUILD CONCRETE PAD. SEE LANDSCAPE PLANS FOR DETAILS.
6. CUT CURB TO DRAIN INTO SWALE. SEE DETAIL ON SHEET C7.

LEGEND

	PHASE 8 BOUNDARY
FL	FLOWLINE
TC	TOP OF CURB
THC	TOP OF HEADER CURB
TOC	TOP OF CONCRETE
N	NORTHING
E	EASTING
C	CURVE

RECEIVED
MAR 2 2 2012
HYDROLOGY SECTION

NORTH

Scale: 1" = 40'

20 0 40 80

AS BUILT INFORMATION
CONTRACTOR
WORK STAKED BY — DATE
INSPECTOR ACCEPTANCE BY — DATE
FIELD VERIFICATION BY — DATE
DRAWINGS CORRECTED BY — DATE
MICRO-FILM INFORMATION
RECORDED BY — DATE
NO.

BENCH MARKS
U.S. COAST & GEODETIC SURVEY TRIANGULATION STATION "HEAVEN". STANDARD USC&GS BRASS CAP IN CONCRETE STAMPED "HEAVEN 1969". BRASS CAP IS SUBSURFACE MONUMENT FOR THE ORIGINAL STATION "HEAVEN". STATION IS LOCATED SOUTH SIDE PASEO DEL NORTE, 325 FEET +/- WEST OF WYOMING AT BACK OF SIDEWALK.

SURVEY INFORMATION
FIELD NOTES

NO.	BY	DATE
11599	SURVEYING CONTROL INC.	10/2010

ENGINEERS SEAL
GEORGE NEMETH
NEW MEXICO
12284
REGISTERED PROFESSIONAL ENGINEER
2-16-12

NO.	DATE	REMARKS	BY
1	2/12	REVISIONS DUE TO SIDEWALK CHANGE	GN

REVISIONS
DESIGN
DESIGNED BY PJC — DATE 12/12
DRAWN BY SEC — DATE 12/12
CHECKED BY GN — DATE 12/12

SMITH ENGINEERING COMPANY
COLORADO NEW MEXICO TEXAS

CONSENSUS PLANNING, INC.
Planning / Landscape Architecture
302 Eighth Street NW
Albuquerque, NM 87102
(505) 764-9801 Fax 842-5495
e-mail: cp@consensusplanning.com

CITY OF ALBUQUERQUE
PARKS AND RECREATION DEPARTMENT
STRATEGIC PLANNING AND DESIGN

TITLE: NORTH DOMINGO BACA PARK - PHASE 8

SITE LAYOUT PLAN - WEST

Design Review Committee	City Engineer Approval	Last Design Update	Mo. / Day / Yr.	Mo. / Day / Yr.

City Project No.	Zone Map No.	Sheet
713897	C-19	C3

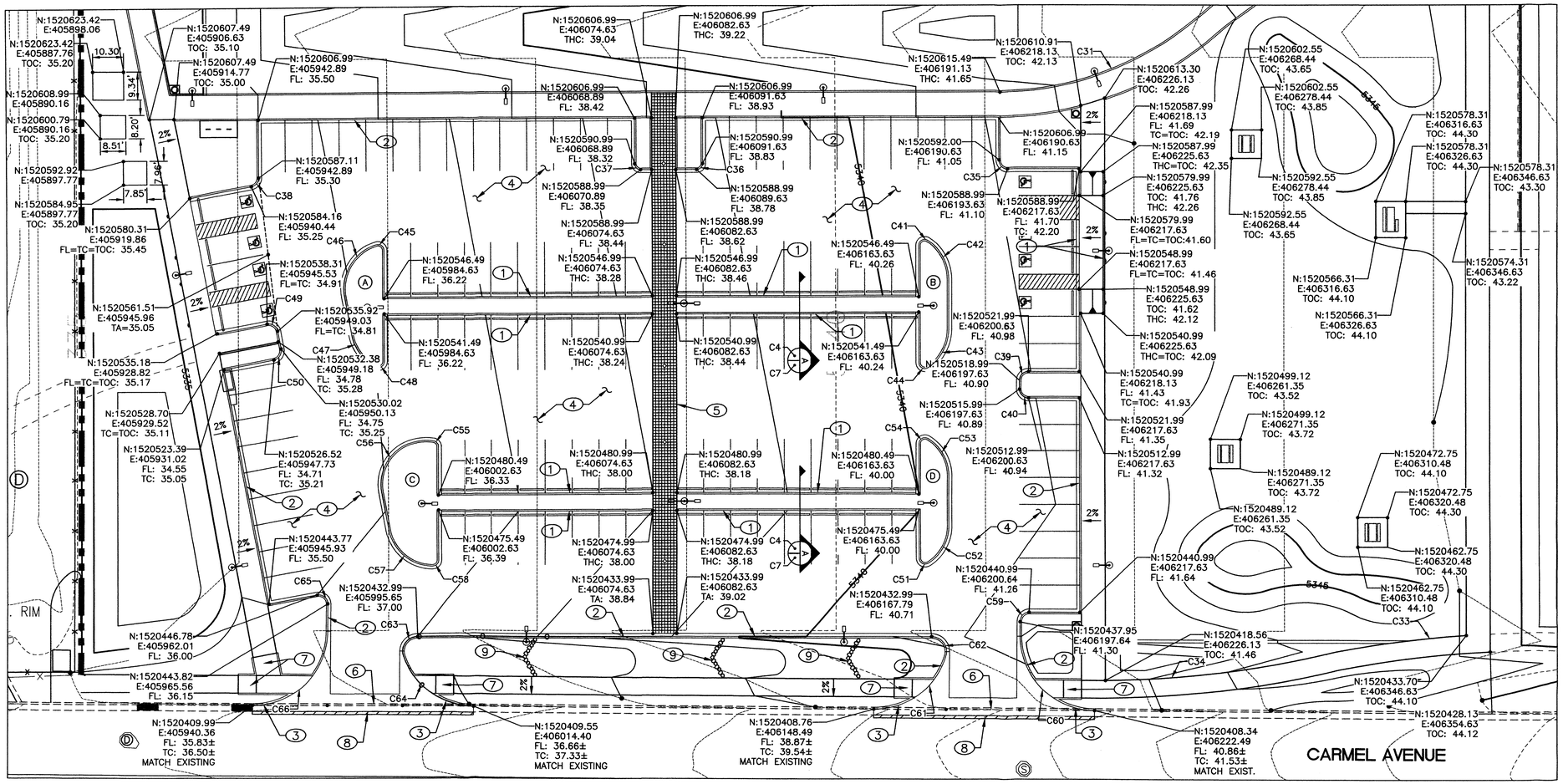

PARKING LOT LAYOUT PLAN

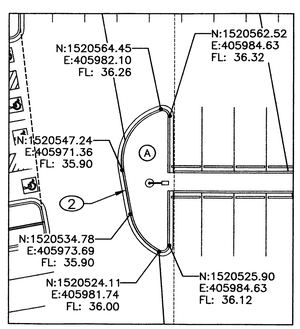

NW PARKING ISLAND

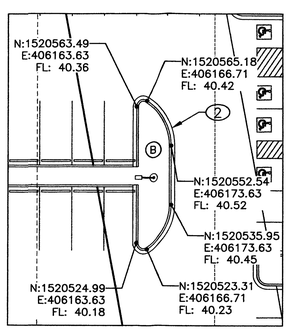

NE PARKING ISLAND

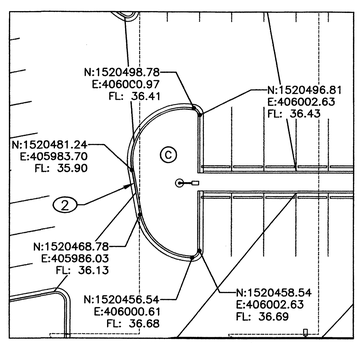

SW PARKING ISLAND

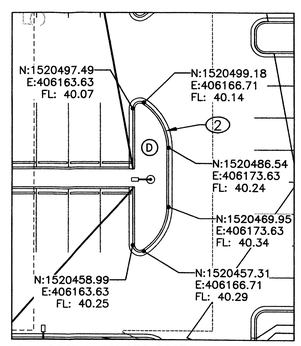

SE PARKING ISLAND

RECEIVED
MAY 2 2 2012
HYDROLOGY SECTION

NORTH

Scale: 1" = 20'

10 0 20 40

GENERAL NOTES:

1. SEE SHEET C10 FOR CURVE DATA.

KEYED NOTES:

1. CONSTRUCT HEADER CURB. SEE COA STD DWG 2415B.
2. CONSTRUCT MEDIAN CURB AND GUTTER. SEE COA STD DWG 2415B.
3. CONSTRUCT STANDARD CURB AND GUTTER. SEE COA STD DWG 2415A.
4. ASPHALT PAVEMENT. SEE TYPICAL PAVEMENT SECTION ON SHEET C7.
5. PATTERNED CONCRETE WALKWAY. SEE LANDSCAPE PLANS FOR DETAIL.
6. CONSTRUCT NEW 6' WIDE VALLEY GUTTER PER COA STD. DWG. 2420 AND PER LAYOUT AND GRADING ON SHEET C7..
7. CONSTRUCT ADA CURB ACCESS RAMP.
8. SAWCUT, REMOVE & REPLACE ASPHALT PAVEMENT. 1' ASPHALT PATCH PER COA STD. DWG. 2465.
9. BUILD BOULDER CHECK DAM.

LEGEND

	PHASE 8 BOUNDARY
FL	FLOWLINE
TC	TOP OF CURB
TOC	TOP OF CONCRETE
THC	TOP OF HEADER CURB
TA	TOP OF ASPHALT
N	NORTHING
E	EASTING
C	CURVE

AS BUILT INFORMATION
CONTRACTOR
WORK STAKED BY — DATE
INSPECTOR'S ACCEPTANCE BY — DATE
FIELD VERIFICATION BY — DATE
DRAWINGS CORRECTED BY — DATE
MICRO-FILM INFORMATION
RECORDED BY — DATE
NO.

BENCH MARKS
U.S. COAST & GEODETIC SURVEY TRIANGULATION STATION "HEAVEN", STANDARD USC&GS BRASS CAP IN CONCRETE MONUMENT FOR THE ORIGINAL STATION "HEAVEN". STATION IS LOCATED SOUTH SIDE PASEO DEL NORTE, 325 FEET +/- WEST OF WYOMING AT BACK OF SIDEWALK.

SURVEY INFORMATION
FIELD NOTES

NO.	BY	DATE
11599	SURVEYING CONTROL INC.	10/2010

ENGINEERS SEAL
GEORGE NEMETH NEW MEXICO 12284 REGISTERED PROFESSIONAL ENGINEER
1-10-12

REVISIONS

NO.	DATE	REMARKS	BY

DESIGN
DESIGNED BY PJC — DATE 12/12
DRAWN BY SEC — DATE 12/12
CHECKED BY GN — DATE 12/12

SMITH ENGINEERING COMPANY — COLORADO NEW MEXICO TEXAS

CONSENSUS PLANNING, INC.
Planning / Landscape Architecture
302 Eighth Street NW
Albuquerque, NM 87102
(505) 764-9801 Fax 842-5495
e-mail: cp@consensusplanning.com

CITY OF ALBUQUERQUE
PARKS AND RECREATION DEPARTMENT
STRATEGIC PLANNING AND DESIGN

TITLE: NORTH DOMINGO BACA PARK - PHASE 8
SITE LAYOUT PLAN - PARKING LOT

Design Review Committee | City Engineer Approval | Last Design Update | Mo. / Day / Yr. | Mo. / Day / Yr.

City Project No. 713897 | Zone Map No. C-19 | Sheet C4

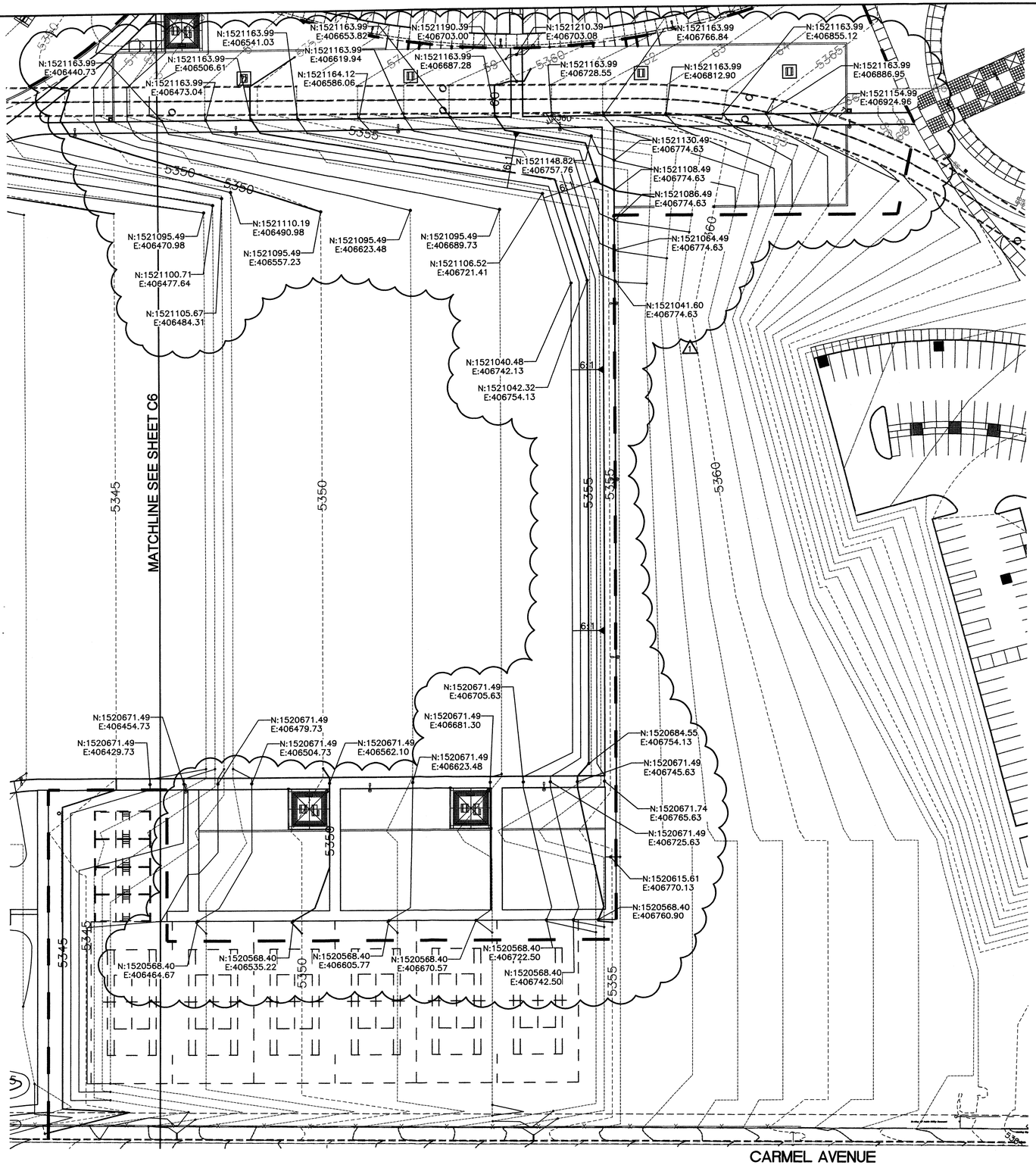

GRADING AND DRAINAGE PLAN - EAST

GENERAL NOTES:

LEGEND

— —	PHASE 8 BOUNDARY
FL	FLOWLINE
TC	TOP OF CURB
TOC	TOP OF CONCRETE
N	NORTHING
E	EASTING
C	CURVE

RECEIVED
MAY 2 2 2012
HYDROLOGY SECTION

NORTH

Scale: 1" = 40'
20 0 40 80

AS BUILT INFORMATION
CONTRACTOR
WORK STAKED BY — DATE
INSPECTOR ACCEPTANCE — DATE
FIELD VERIFICATION BY — DATE
DRAWINGS CORRECTED BY — DATE
MICRO-FILM INFORMATION
RECORDED BY — DATE
NO.

BENCH MARKS
U.S. COAST & GEODETIC SURVEY TRIANGULATION STATION "HEAVEN". STANDARD USC&GS BRASS CAP IN CONCRETE STAMPED "HEAVEN 1989". BRASS CAP IS SUBSURFACE MONUMENT FOR THE ORIGINAL STATION "HEAVEN". STATION IS LOCATED SOUTH SIDE PASEO DEL NORTE, 325 FEET +/- WEST OF WYOMING AT BACK OF SIDEWALK.

SURVEY INFORMATION
FIELD NOTES

NO.	BY	DATE
11599	SURVEYING CONTROL INC.	10/2010

ENGINEERS SEAL
GEORGE NEMENZO
NEW MEXICO
12284
REGISTERED PROFESSIONAL ENGINEER
2-16-12

NO.	DATE	REMARKS	BY
1	2/12	REVISIONS DUE TO SIDEWALK CHANGE	GN

REVISIONS
DESIGN
DESIGNED BY PJC — DATE 12/12
DRAWN BY SEC — DATE 12/12
CHECKED BY GN — DATE 12/12

SMITH ENGINEERING COMPANY
COLORADO NEW MEXICO TEXAS

CONSENSUS PLANNING
CONSENSUS PLANNING, INC.
Planning / Landscape Architecture
302 Eighth Street NW
Albuquerque, NM 87102
(505) 764-9801 Fax 842-5495
e-mail: cp@consensusplanning.com

CITY OF ALBUQUERQUE
PARKS AND RECREATION DEPARTMENT
STRATEGIC PLANNING AND DESIGN

TITLE: NORTH DOMINGO BACA PARK - PHASE 8
SITE GRADING AND DRAINAGE PLAN - EAST

Design Review Committee	City Engineer Approval	Last Design Update	Mo. / Day / Yr.	Mo. / Day / Yr.

City Project No.	Zone Map No.	Sheet
713897	C-19	C5

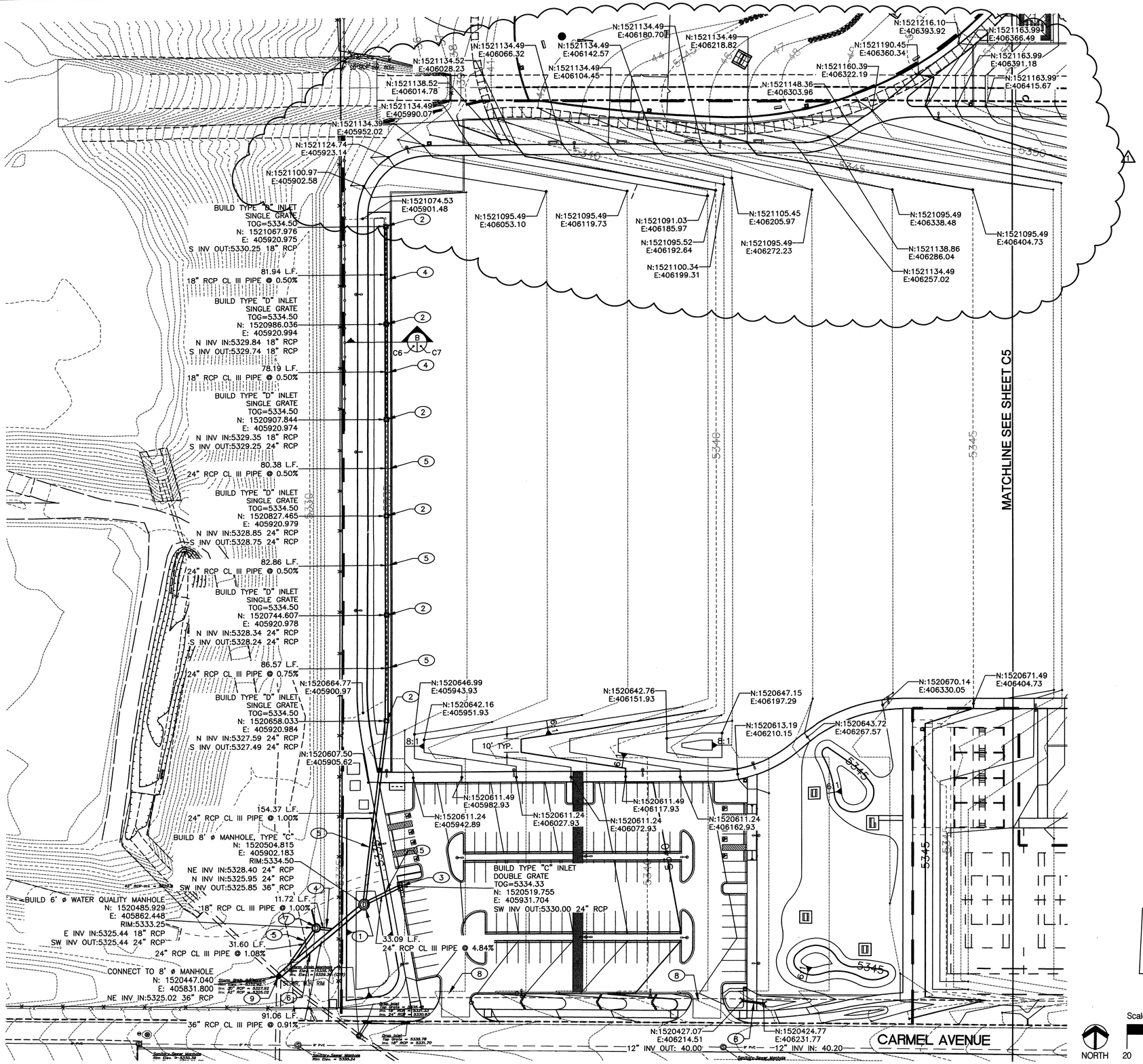

KEYED NOTES:

1. BUILD 8' ø TYPE "C" MANHOLE PER COA STD. DWG. 2101. INSTALL PERFORATED LID & FRAME. NEENAH MODEL R-1788-B OR APPROVED EQUAL.
2. BUILD TYPE "D" STORM INLET PER COA STD. DWG. 2206.
3. BUILD TYPE DOUBLE "C" STORM INLET PER COA STD. DWG. 2205.
4. 18" RCP CL III PIPE.
5. 24" RCP CL III PIPE.
6. 36" RCP CL III PIPE.
7. BUILD 6' ø WATER QUALITY MANHOLE PER AMAFCA STD. DWG. 301. SEE SHEET C8 & C9.
8. INSTALL 12" CMP.
9. CONTRACTOR SHALL NOTIFY ENGINEER UPON OPENING EXISTING MANHOLE. ENGINEER WILL INSPECT EXISTING MANHOLE AND VERIFY SIZE. IF MANHOLE DIA. IS LESS THAN 8', BUILD NEW 8' ø TYPE "C" MANHOLE PER COA STD. DWG. 2101. OTHERWISE, CONNECT NEW 36" RCP STORM DRAIN TO EXISTING MANHOLE.

LEGEND

	PHASE 8 BOUNDARY
FL	FLOWLINE
TC	TOP OF CURB
TOC	TOP OF CONCRETE
N	NORTHING
E	EASTING
C	CURVE

NOTE: INSTALLATION OF ALL TYPE "D" STORM INLETS SHALL BE ORIENTED SO THAT LONGER SIDE IS PERPENDICULAR TO STORM DRAIN PIPE.

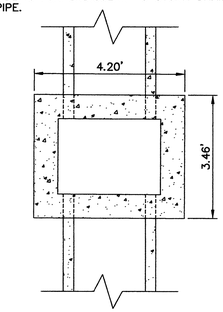

TYPE "D" STORM INLET DETAIL
NTS

RECEIVED
MAR 29 2012
HYDROLOGY SECTION

SMITH ENGINEERING COMPANY
COLORADO NEW MEXICO TEXAS

CONSENSUS PLANNING, INC.
Planning / Landscape Architecture
302 Eighth Street NW
Albuquerque, NM 87102
(505) 764-9801 Fax 842-5495
e-mail: cp@consensusplanning.com

AS BUILT INFORMATION
CONTRACTOR
WORK STAKED BY DATE
INSPECTORS ACCEPTANCE BY DATE
FIELD VERIFICATION BY DATE
DRAWINGS CORRECTED BY DATE
MICRO-FILM INFORMATION
RECORDED BY DATE
NO.

BENCH MARKS
U.S. COAST & GEODETIC SURVEY TRIANGULATION STATION "HEAVEN", STANDARD USC&GS BRASS CAP IN CONCRETE STAMPED "HEAVEN 1969". BRASS CAP IS SUBSURFACE MONUMENT FOR THE ORIGINAL STATION "HEAVEN". STATION IS LOCATED SOUTH SIDE PASEO DEL NORTE, 325 FEET +/- WEST OF WYOMING AT BACK OF SIDEWALK.

SURVEY INFORMATION
FIELD NOTES

NO.	BY	DATE
11599	SURVEYING CONTROL INC.	10/2010

ENGINEERS SEAL
GEORGE NEWTH NEW MEXICO 12284 REGISTERED PROFESSIONAL ENGINEER
2-16-12

NO.	DATE	REMARKS	BY
1	2/12	REVISIONS DUE TO SIDEWALK CHANGE	GN

REVISIONS
DESIGN
DESIGNED BY PJC DATE 12/12
DRAWN BY SEC DATE 12/12
CHECKED BY GN DATE 12/12

CITY OF ALBUQUERQUE
PARKS AND RECREATION DEPARTMENT
STRATEGIC PLANNING AND DESIGN

TITLE: NORTH DOMINGO BACA PARK - PHASE 8
SITE GRADING AND DRAINAGE PLAN - WEST

Design Review Committee	City Engineer Approval	Last Design Update	Mo. / Day / Yr.	Mo. / Day / Yr.

City Project No.	Zone Map No.	Sheet
713897	C-19	C6

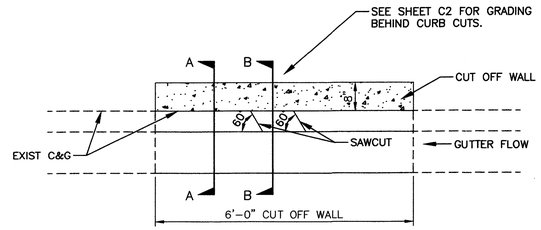

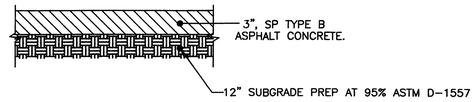

TYPICAL PAVEMENT SECTION

SCALE: NTS

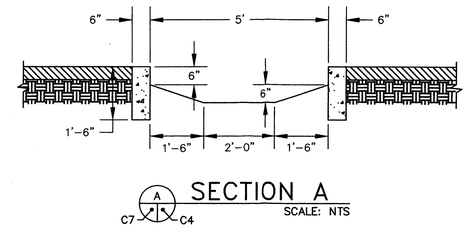

SECTION A

SCALE: NTS

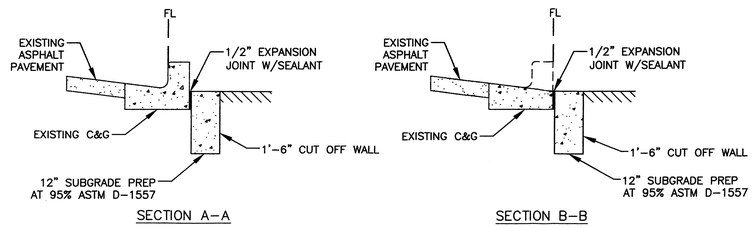

CURB CUT DETAIL

SCALE: NTS

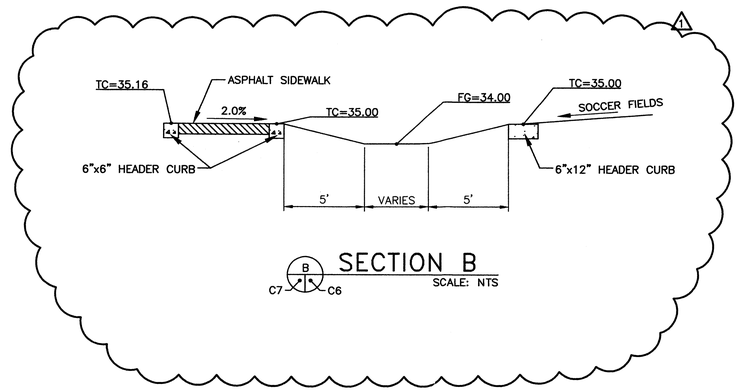

SECTION B

SCALE: NTS

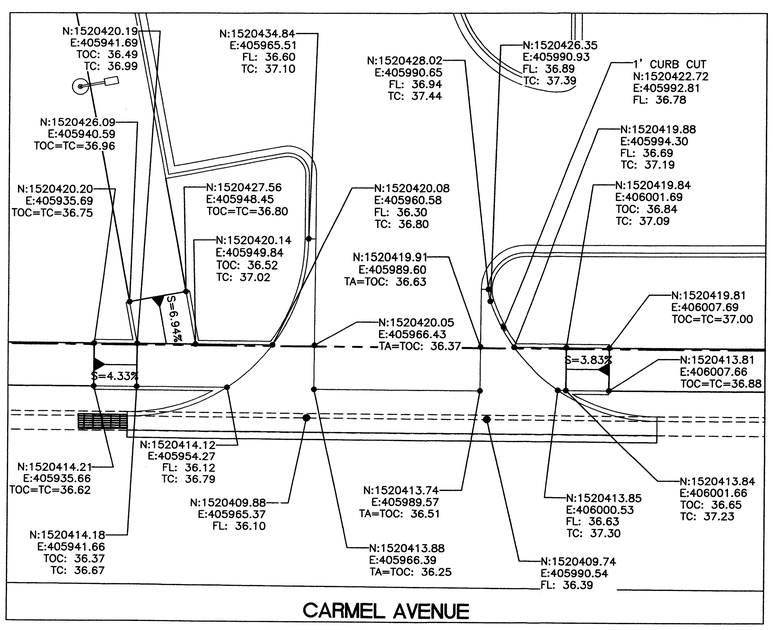

PARKING LOT - WEST ENTRANCE

SCALE: 1"=10'

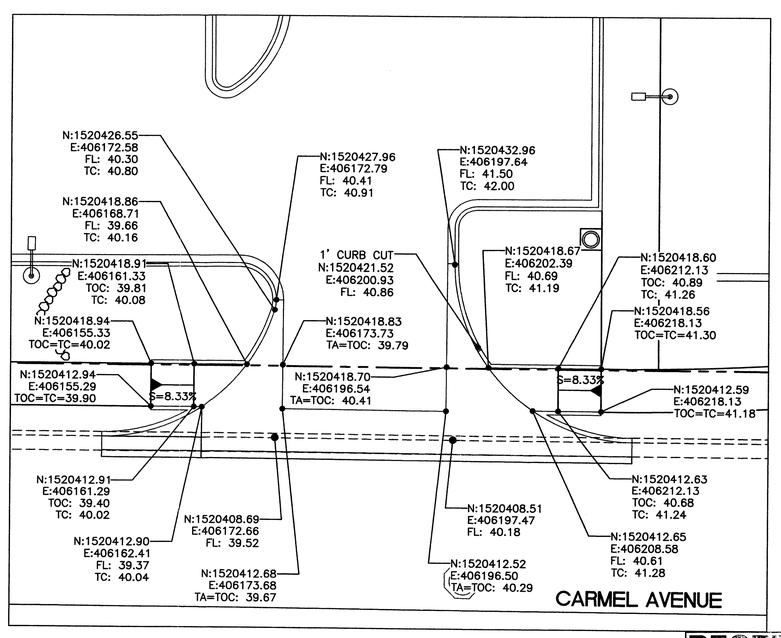

PARKING LOT - EAST ENTRANCE

SCALE: 1"=10'

RECEIVED
MAY 2 2 2012
HYDROLOGY SECTION

NOTE: TOPO TURNED OFF FOR CLARITY.

LEGEND

	PHASE 8 BOUNDARY
FL	FLOWLINE
TC	TOP OF CURB
TOC	TOP OF CONCRETE
THC	TOP OF HEADER CURB
TA	TOP OF ASPHALT
N	NORTHING
E	EASTING
C	CURVE

SMITH ENGINEERING COMPANY
COLORADO NEW MEXICO TEXAS

CONSENSUS PLANNING, INC.
Planning / Landscape Architecture
302 Eighth Street NW
Albuquerque, NM 87102
(505) 764-9801 Fax 842-5495
e-mail: cp@consensusplanning.com

CITY OF ALBUQUERQUE
PARKS AND RECREATION DEPARTMENT
STRATEGIC PLANNING AND DESIGN

TITLE: NORTH DOMINGO BACA PARK - PHASE 8
CIVIL DETAILS AND SECTIONS

Design Review Committee	City Engineer Approval	Last Design Update	Mo. / Day / Yr.	Mo. / Day / Yr.

City Project No.	Zone Map No.	Sheet
713897	C-19	C7

AS BUILT INFORMATION

CONTRACTOR WORK STAKED BY	DATE
INSPECTOR'S VERIFICATION OF DISTANCE BY	DATE
FIELD VERIFICATION BY	DATE
DRAWINGS CORRECTED BY	DATE

MICRO-FILM INFORMATION

RECORDED BY	DATE
NO.	

BENCH MARKS

U.S. COAST & GEODETIC SURVEY TRIANGULATION STATION "HEAVEN", STANDARD USC&GS BRASS CAP IN CONCRETE STAMPED "HEAVEN 1969", BRASS CAP IS SUBSURFACE MONUMENT FOR THE ORIGINAL STATION "HEAVEN", STATION IS LOCATED SOUTH SIDE PASEO DEL NORTE, 325 FEET +/- WEST OF WYOMING AT BACK OF SIDEWALK.

SURVEY INFORMATION

FIELD NOTES

NO.	BY	DATE
11599	SURVEYING CONTROL INC.	10/2010

ENGINEERS SEAL

GEORGE NEMETH NEW MEXICO 12284 REGISTERED PROFESSIONAL ENGINEER
2-16-12

NO.	DATE	REMARKS	BY
1	2/12	REVISIONS DUE TO SIDEWALK CHANGE	GN

REVISIONS

DESIGN

DESIGNED BY PJC DATE 12/12
DRAWN BY SEC DATE 12/12
CHECKED BY GN DATE 12/12

1. DIMENSIONS/SIZES "H", "X", "Y", AND "Z" SHALL BE DETERMINED BY THE PROJECT ENGINEER.

2. WHEN FEASIBLE, THE 8" EXFILTRATION PIPE MAY BE DISCHARGED INTO AN ADJACENT CHANNEL AT A LOCATION DETERMINED BY THE PROJECT ENGINEER AND SHOWN ON THE P & P SHEET.

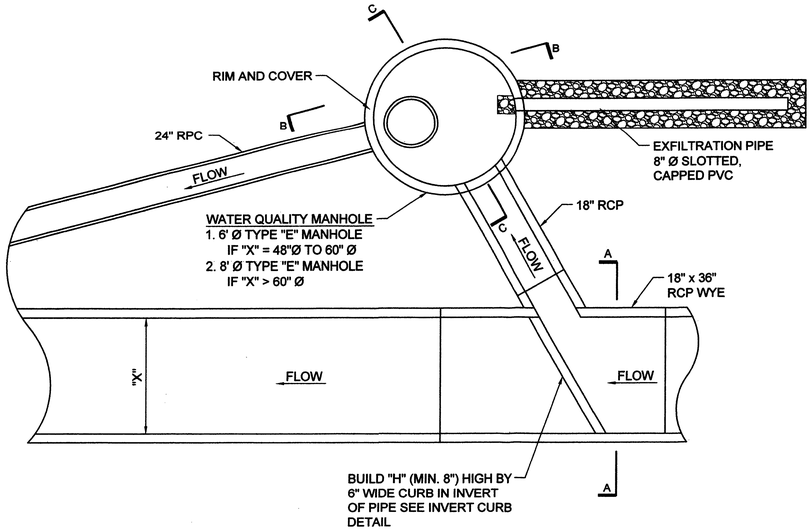

TYPICAL DEBRIS TREATMENT MANHOLE SYSTEM

NO SCALE

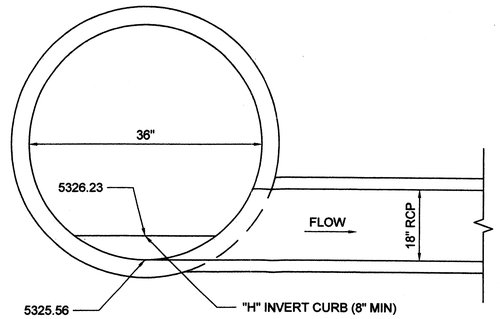

SECTION A-A

NO SCALE

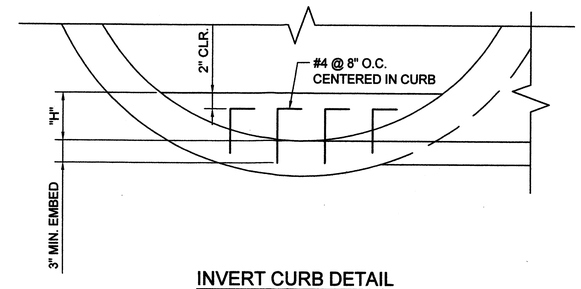

INVERT CURB DETAIL

NO SCALE

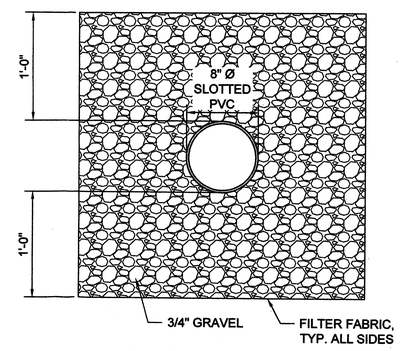

SECTION D-D

NO SCALE

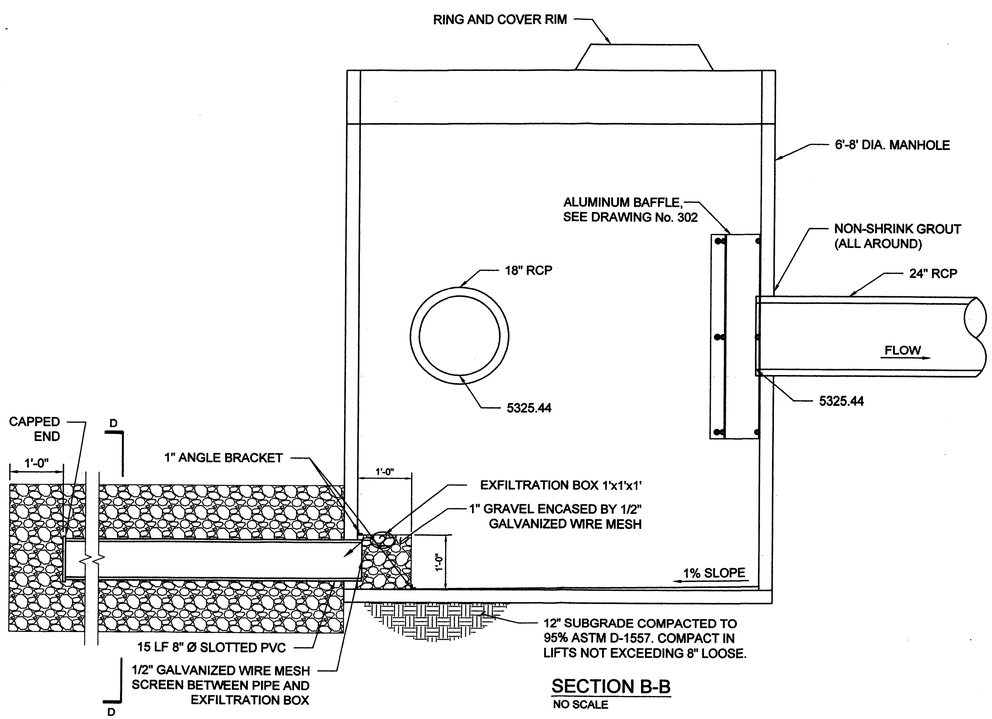

SECTION B-B

NO SCALE

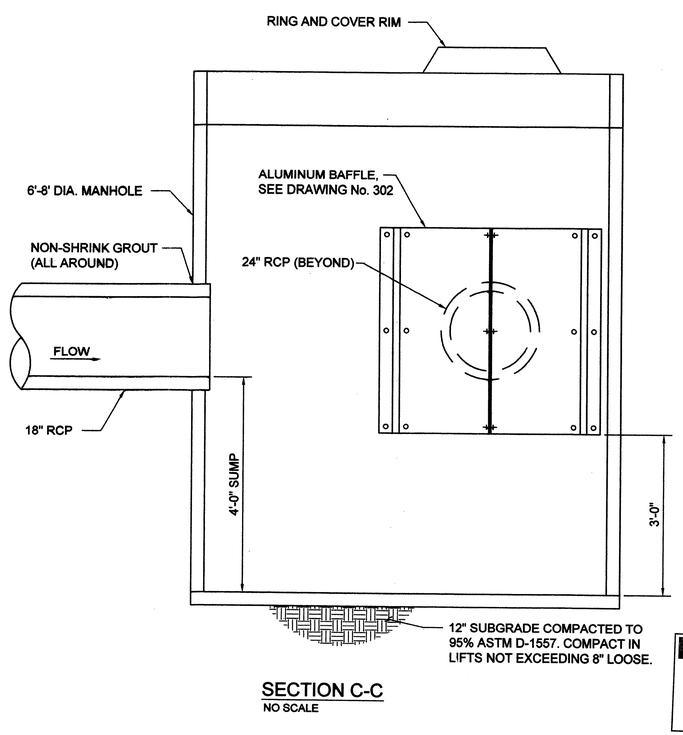

SECTION C-C

NO SCALE

RECEIVED
MAY 2 2 2012
HYDROLOGY
SECTION

AMAFCA STD DWG 301

AS BUILT INFORMATION
CONTRACTOR
WORK STAKED BY
INSPECTOR'S ACCEPTANCE BY
FIELD VERIFICATION BY
DRAWINGS CORRECTED BY
DATE
MICRO-FILM INFORMATION
RECORDED BY
DATE
NO.

BENCH MARKS

SURVEY INFORMATION
FIELD NOTES
NO. BY DATE

ENGINEERS SEAL

NO.	DATE	REMARKS	BY
		REVISIONS	

DESIGNED BY DATE
DRAWN BY DATE
CHECKED BY DATE

CITY OF ALBUQUERQUE
PARKS AND RECREATION DEPARTMENT
STRATEGIC PLANNING AND DESIGN

TITLE: NORTH DOMINGO BACA PARK - PHASE 8

WATER QUALITY MANHOLE SECTIONS AND DETAILS

Design Review Committee	City Engineer Approval	Last Design Update	No. / Day / Yr.	No. / Day / Yr.

City Project No.	Zone Map No.	Sheet
713897	C-19	C8 of 29

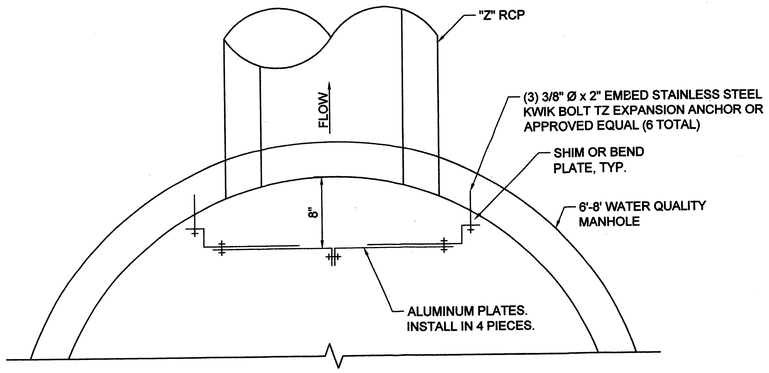

ALUMINUM BAFFLE PLAN

NO SCALE

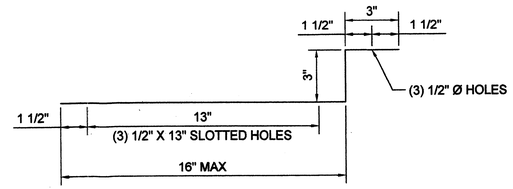

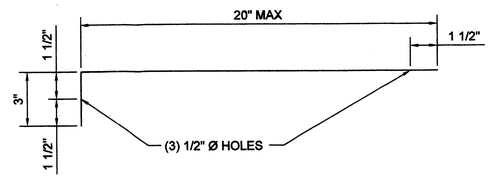

ALUMINUM PLATE BEND DIAGRAM

NO SCALE

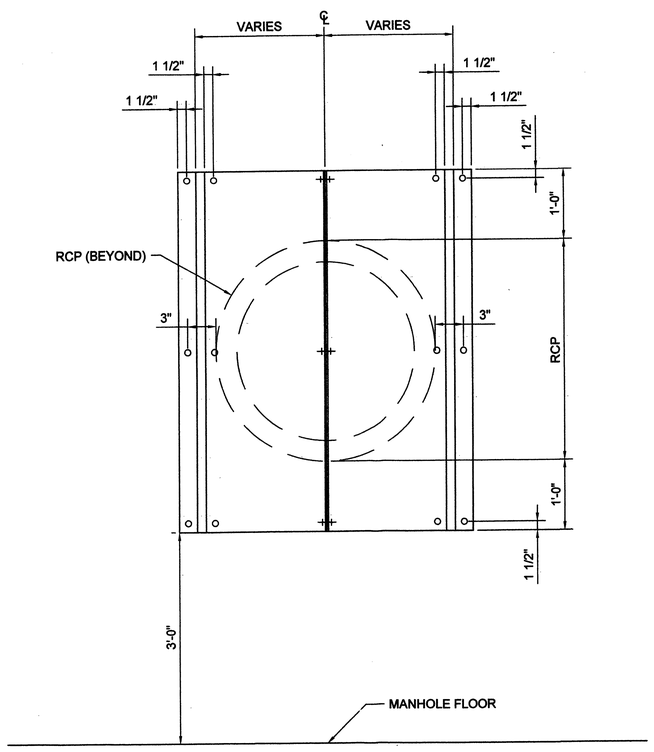

ALUMINUM BAFFLE ELEVATION

NO SCALE

RECEIVED
MAY 2 9 2012
HYDROLOGY SECTION

AMAFCA STD DWG 302

AS BUILT INFORMATION

CONTRACTOR		DATE
WORK STAKED BY		DATE
INSPECTOR'S ACCEPTANCE BY		DATE
FIELD VERIFICATION BY		DATE
DRAWINGS CORRECTED BY		

MICRO-FILM INFORMATION

RECORDED BY	DATE
NO.	

BENCH MARKS

SURVEY INFORMATION

FIELD NOTES

NO.	BY	DATE

ENGINEERS SEAL

NO.	DATE	REMARKS	BY

REVISIONS

DESIGN

DESIGNED BY	DATE
DRAWN BY	DATE
CHECKED BY	DATE

CITY OF ALBUQUERQUE
PARKS AND RECREATION DEPARTMENT
STRATEGIC PLANNING AND DESIGN

TITLE: NORTH DOMINGO BACA PARK - PHASE 8

WATER QUALITY MANHOLE BAFFLE DETAILS

Design Review Committee	City Engineer Approval	Last Design Update	No. / Day / Yr.	No. / Day / Yr.

City Project No.	Zone Map No.	Sheet
713897	C-19	C9 of 29

NOTE: CURVE DATA POINTS 1–29 WERE DELETED DUE TO SIDEWALK RECONFIGURATION.

CURVE DATA TABLE

NUMBER	DELTA ANGLE	CHORD BEARING	CHORD LENGTH	RADIUS (Ft.)	ARC LENGTH (Ft.)
C30	40°15'27"	S68° 33' 25"W	95.32'	138.49	97.31
C31	41°34'18"	N69° 12' 51"E	70.88'	99.87	72.46
C32	10°47'38"	S5° 12' 19"E	37.53'	199.50	37.58
C33	7°19'34"	S82° 33' 42"W	44.12'	345.30	44.15
C34	13°58'37"	N83° 39' 19"E	85.27'	350.42	85.48
C35	90°01'24"	S44° 59' 18"E	4.24'	3.00	4.71
C36	90°00'00"	N45° 00' 00"E	2.83'	2.00	3.14
C37	90°00'00"	S45° 00' 00"E	2.83'	2.00	3.14
C38	79°23'52"	N39° 41' 56"E	3.83'	3.00	4.16
C39	90°00'00"	S45° 00' 00"W	4.24'	3.00	4.71
C40	90°00'00"	S45° 00' 00"E	4.24'	3.00	4.71
C41	122°34'44"	S61° 17' 22"W	3.51'	2.00	4.28
C42	57°25'16"	N28° 42' 38"W	14.41'	15.00	15.03
C43	57°25'16"	N28° 42' 38"E	14.41'	15.00	15.03
C44	122°34'44"	S61° 17' 22"E	3.51'	2.00	4.28
C45	105°29'42"	N52° 44' 51"W	3.18'	2.00	3.68
C46	85°05'45"	S31° 57' 26"W	20.29'	15.00	22.28
C47	52°54'34"	S37° 02' 15"E	13.36'	15.00	13.85
C48	116°30'28"	N58° 15' 14"E	3.40'	2.00	4.07
C49	90°00'00"	N55° 36' 08"W	4.24'	3.00	4.71
C50	90°00'00"	N34° 23' 52"E	4.24'	3.00	4.71
C51	122°34'44"	S61° 17' 22"E	3.51'	2.00	4.28
C52	57°25'16"	N28° 42' 38"E	14.41'	15.00	15.03
C53	57°25'16"	N28° 42' 38"W	14.41'	15.00	15.03
C54	122°34'44"	S61° 17' 22"W	3.51'	2.00	4.28

CURVE DATA TABLE

NUMBER	DELTA ANGLE	CHORD BEARING	CHORD LENGTH	RADIUS (Ft.)	ARC LENGTH (Ft.)
C55	80°19'04"	N40° 09' 32"W	2.58'	2.00	2.80
C56	110°16'23"	S44° 32' 45"W	24.62'	15.00	28.87
C57	78°47'17"	S49° 58' 36"E	19.04'	15.00	20.63
C58	90°37'45"	N45° 18' 53"E	2.84'	2.00	3.16
C59	90°51'52"	S44° 34' 04"W	4.27'	3.00	4.76
C60	88°47'52"	S45° 15' 48"E	34.98'	25.00	38.75
C61	73°34'31"	N53° 33' 00"E	29.94'	25.00	32.10
C62	106°45'45"	N36° 37' 07"W	8.03'	5.00	9.32
C63	109°08'34"	S35° 25' 43"W	8.15'	5.00	9.52
C64	70°31'10"	S54° 24' 09"E	28.86'	25.00	30.77
C65	100°56'19"	N50° 07' 58"W	4.63'	3.00	5.29
C66	90°00'05"	N45° 20' 13"E	35.36'	25.00	39.27
C67	8°21'44"	N54° 51' 51"E	48.90'	335.31	48.94
C68	16°18'12"	N43° 46' 34"E	88.15'	310.83	88.45
C69	3°08'31"	S52° 13' 33"W	56.09'	1022.99	56.10
C70	141°47'56"	S20° 14' 40"E	9.45'	5.00	12.37
C71	33°36'11"	S72° 50' 31"W	54.02'	93.44	54.80
C72	34°58'23"	N73° 25' 10"E	47.53'	79.09	48.28
C73	9°19'26"	S85° 40' 43"W	35.73'	219.78	35.77
C74	15°22'36"	S89° 28' 59"E	83.33'	311.45	83.58
C75	8°28'45"	N84° 19' 42"W	19.63'	132.77	19.65
C76	89°48'30"	S45° 05' 45"W	69.89'	49.50	77.59

RECEIVED
MAY 2 2 2012
HYDROLOGY SECTION

SMITH ENGINEERING COMPANY
COLORADO NEW MEXICO TEXAS

CONSENSUS PLANNING

CONSENSUS PLANNING, INC.
Planning / Landscape Architecture
302 Eighth Street NW
Albuquerque, NM 87102
(505) 764–9801 Fax 842–5495
e–mail: cp@consensusplanning.com

CITY OF ALBUQUERQUE
PARKS AND RECREATION DEPARTMENT
STRATEGIC PLANNING AND DESIGN

TITLE: NORTH DOMINGO BACA PARK - PHASE 8

CURVE DATA

Design Review Committee	City Engineer Approval	Last Design Update	Mo. / Day / Yr.	Mo. / Day / Yr.

City Project No.	Zone Map No.	Sheet
713897	C-19	C10

SURVEY INFORMATION

FIELD NOTES

NO.	BY	DATE
11599	SURVEYING CONTROL INC.	10/2010

BENCH MARKS

U.S. COAST & GEODETIC SURVEY TRIANGULATION STATION "HEAVEN". STANDARD USC&GS BRASS CAP IN CONCRETE STAMPED "HEAVEN 1969". BRASS CAP IS SUBSURFACE MONUMENT FOR THE ORIGINAL STATION "HEAVEN". STATION IS LOCATED SOUTH SIDE PASEO DEL NORTE, 325 FEET +/- WEST OF WYOMING AT BACK OF SIDEWALK.

AS BUILT INFORMATION

CONTRACTOR
WORK STAKED BY — DATE
INSPECTOR'S ACCEPTANCE BY — DATE
FIELD VERIFICATION BY — DATE
DRAWINGS CORRECTED BY

MICRO-FILM INFORMATION
RECORDED BY — DATE
NO.

ENGINEERS SEAL

GEORGE NEMETH NEW MEXICO 12284 REGISTERED PROFESSIONAL ENGINEER
2-16-12

NO.	DATE	REMARKS	BY
1	2/12	REVISIONS DUE TO SIDEWALK CHANGE	GN

REVISIONS

DESIGN

DESIGNED BY	PJC	DATE 12/12
DRAWN BY	SEC	DATE 12/12
CHECKED BY	GN	DATE 12/12