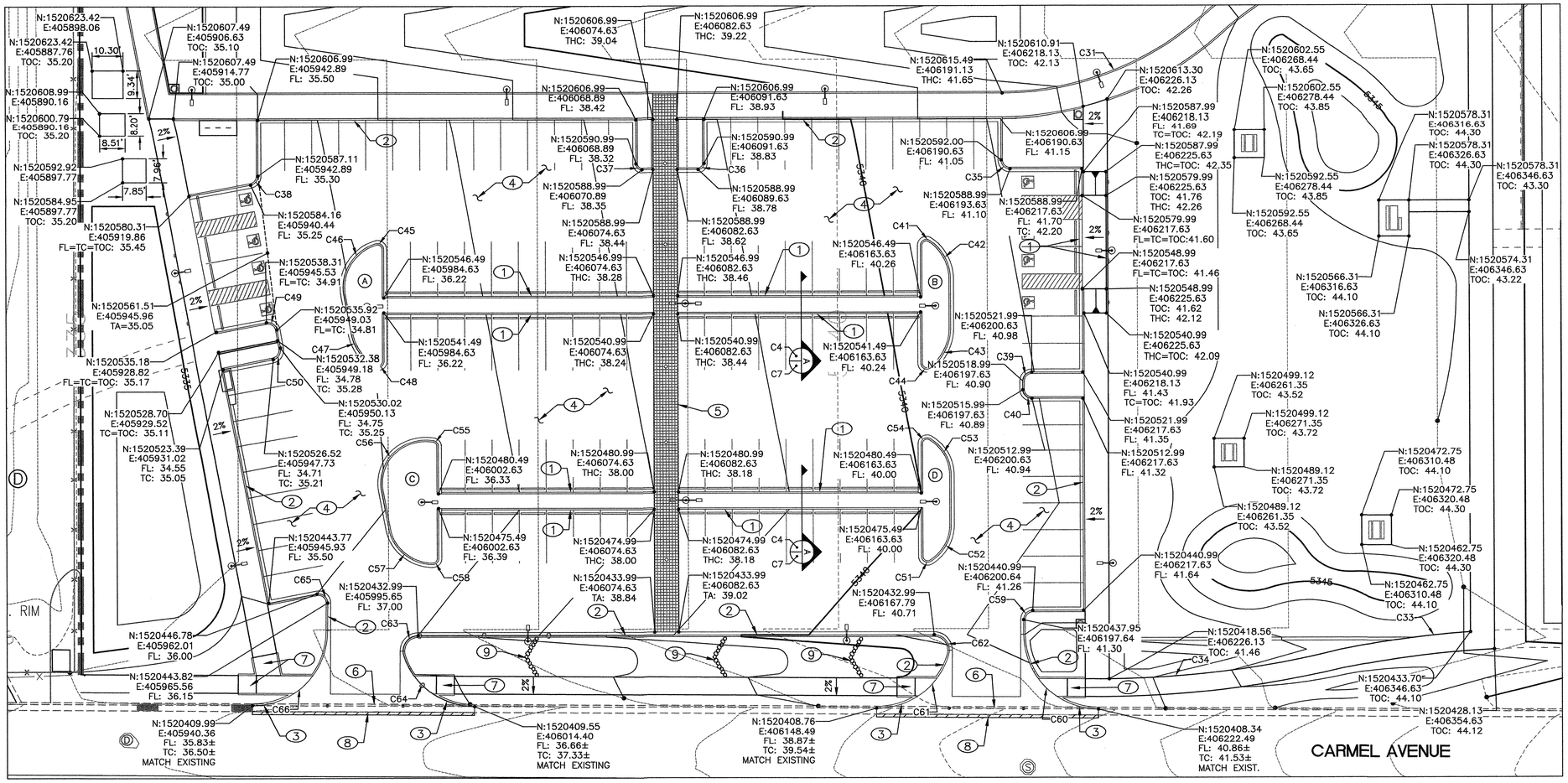

PARKING LOT LAYOUT PLAN

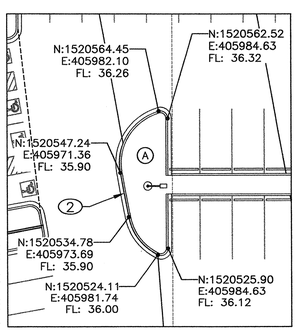

NW PARKING ISLAND

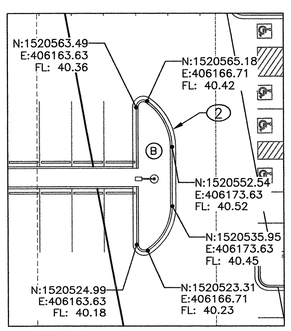

NE PARKING ISLAND

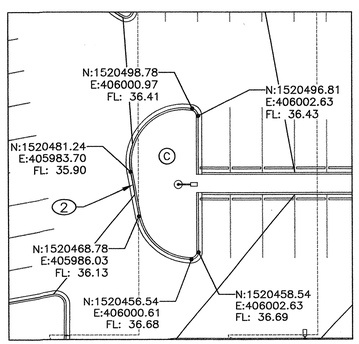

SW PARKING ISLAND

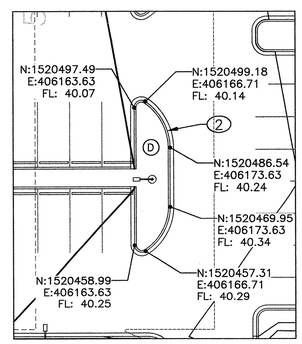

SE PARKING ISLAND

Scale: 1" = 20'

NORTH 10 0 20 40

GENERAL NOTES:

1. SEE SHEET C10 FOR CURVE DATA.

KEYED NOTES:

1. CONSTRUCT HEADER CURB. SEE COA STD DWG 2415B.
2. CONSTRUCT MEDIAN CURB AND GUTTER. SEE COA STD DWG 2415B.
3. CONSTRUCT STANDARD CURB AND GUTTER. SEE COA STD DWG 2415A.
4. ASPHALT PAVEMENT. SEE TYPICAL PAVEMENT SECTION ON SHEET C7.
5. PATTERNED CONCRETE WALKWAY. SEE LANDSCAPE PLANS FOR DETAIL.
6. CONSTRUCT NEW 6' WIDE VALLEY GUTTER PER COA STD. DWG. 2420 AND PER LAYOUT AND GRADING ON SHEET C7..
7. CONSTRUCT ADA CURB ACCESS RAMP.
8. SAWCUT, REMOVE & REPLACE ASPHALT PAVEMENT. 1' ASPHALT PATCH PER COA STD. DWG. 2465.
9. BUILD BOULDER CHECK DAM.

LEGEND

PHASE 8 BOUNDARY	
FL	FLOWLINE
TC	TOP OF CURB
TOC	TOP OF CONCRETE
THC	TOP OF HEADER CURB
TA	TOP OF ASPHALT
N	NORTHING
E	EASTING
C	CURVE

AS BUILT INFORMATION

CONTRACTOR		
WORK STAKED BY		DATE
INSPECTOR'S ACCEPTANCE BY		DATE
FIELD VERIFICATION BY		DATE
DRAWINGS CORRECTED BY		DATE

MICRO-FILM INFORMATION

RECORDED BY	DATE
NO.	

BENCH MARKS

U.S. COAST & GEODETIC SURVEY TRIANGULATION STATION "HEAVEN". STANDARD USC&GS BRASS CAP IN CONCRETE STAMPED "HEAVEN 1969". BRASS CAP IS SUBSURFACE MONUMENT FOR THE ORIGINAL STATION "HEAVEN". STATION IS LOCATED SOUTH SIDE PASEO DEL NORTE, 325 FEET +/- WEST OF WYOMING AT BACK OF SIDEWALK.

SURVEY INFORMATION

FIELD NOTES

NO.	BY	DATE
11599	SURVEYING CONTROL INC.	10/2010

ENGINEERS SEAL

GEORGE NEMETH NEW MEXICO 12284 REGISTERED PROFESSIONAL ENGINEER

1-10-12

NO.	DATE	REMARKS	BY

REVISIONS

DESIGN

DESIGNED BY PJC	DATE 12/12	
DRAWN BY SEC	DATE 12/12	
CHECKED BY GN	DATE 12/12	

SMITH ENGINEERING COMPANY
COLORADO NEW MEXICO TEXAS

CONSENSUS PLANNING, INC.
Planning / Landscape Architecture
302 Eighth Street NW
Albuquerque, NM 87102
(505) 764-9801 Fax 842-5495
e-mail: cp@consensusplanning.com

CITY OF ALBUQUERQUE
PARKS AND RECREATION DEPARTMENT
STRATEGIC PLANNING AND DESIGN

TITLE: NORTH DOMINGO BACA PARK - PHASE 8

SITE LAYOUT PLAN - PARKING LOT

Design Review Committee	City Engineer Approval	Last Design Update	Mo. / Day / Yr.	Mo. / Day / Yr.

City Project No.	Zone Map No.	Sheet
713897	C-19	C4