#36

Federal Emergency Management Agency

Washington, D.C. 20472

CERTIFIED MAIL
RETURN RECEIPT REQUESTED

IN REPLY REFER TO:
Case No.: 00-06-614P

The Honorable Tom Rutherford
Chair, Board of County Commissioners
Bernalillo County
2400 Broadway Southeast
Albuquerque, NM 87102

Community: Bernalillo County, NM
Community No.: 350001
Panel Affected: 35001C0161 D
Effective Date of This Revision: MAR 3 1 2000

102-D-A

Dear Mr. Rutherford:

This responds to a request that the Federal Emergency Management Agency (FEMA) revise the effective Flood Insurance Rate Map (FIRM) for Bernalillo County, New Mexico and Incorporated Areas (the effective FIRM for your community), in accordance with Part 65 of the National Flood Insurance Program (NFIP) regulations. In a letter dated January 20, 2000, Ms. Susan M. Calongne, P.E., City/County Floodplain Administrator, City of Albuquerque/Bernalillo County, requested that FEMA revise the FIRM to show the effects of a concrete-lined channel with a 10-foot bottom width and 2:1 side slopes along North Arroyo De Domingo Baca from Tramway Boulevard to Tramway Lane, three 6-foot by 10-foot reinforced-concrete box culverts under Tramway Lane, and associated inlet work. This request follows up on a Conditional Letter of Map Revision issued on August 14, 1996.

All data required to complete our review of this request were submitted with letters from Mr. John P. Kelly, P.E., Executive Engineer, Albuquerque Metropolitan Arroyo Flood Control Authority; Mr. John J. Andrews, P.E., Principal, The Larkin Group, Inc.; and Ms. Calongne.

We have completed our review of the submitted data and the flood data shown on the effective FIRM. We have revised the FIRM to modify the elevations and floodplain boundary delineations of the flood having a 1-percent chance of being equaled or exceeded in any given year (base flood) along North Arroyo De Domingo Baca. As a result of the modifications, the width of the Special Flood Hazard Area (SFHA), the area that would be inundated by the base flood, decreased, and the base flood is contained in the channel along North Arroyo De Domingo Baca from Tramway Boulevard to just upstream of Tramway Lane. The modifications are shown on the enclosed annotated copy of FIRM Panel(s) 35001C0161 D. This Letter of Map Revision (LOMR) hereby revises the above-referenced panel(s) of the effective FIRM dated September 20, 1996.

The modifications are effective as of the date shown above. The map panel(s) as listed above and as modified by this letter will be used for all flood insurance policies and renewals issued for your community.

The following table is a partial listing of existing and modified BFEs:

Location	Existing BFE (feet)	Modified BFE (feet)
Approximately 450 feet upstream of Tramway Boulevard	2*	None**

*Depth above ground, rounded to the nearest whole foot
**Base flood contained in channel

Public notification of the modified BFEs will be given in the *Albuquerque Journal* on or about May 11 and May 18, 2000. A copy of this notification is enclosed. In addition, a notice of changes will be published in the *Federal Register*. Within 90 days of the second publication in the *Albuquerque Journal* a citizen may request that FEMA reconsider the determination made by this LOMR. Any request for reconsideration must be based on scientific or technical data. All interested parties are on notice that, until the 90-day period elapses, the determination to modify the BFEs presented in this LOMR may itself be modified.

Because this LOMR will not be printed and distributed to primary users, such as local insurance agents and mortgage lenders, your community will serve as a repository for these new data. We encourage you to disseminate the information reflected by this LOMR throughout the community, so that interested persons, such as property owners, local insurance agents, and mortgage lenders, may benefit from the information. We also encourage you to prepare a related article for publication in your community's local newspaper. This article should describe the assistance that officials of your community will give to interested persons by providing these data and interpreting the NFIP maps.

We are processing a revised FIRM and Flood Insurance Study (FIS) report for Bernalillo County; therefore, we will not physically revise and republish the FIRM and FIS report for your community to incorporate the modifications made by this LOMR at this time. Preliminary copies of the revised FIRM and FIS report were submitted to your community for review on March 31, 1999. We will incorporate the modifications made by this LOMR into the revised FIRM and FIS report before they become effective.

This LOMR is based on minimum floodplain management criteria established under the NFIP. Your community is responsible for approving all floodplain development and for ensuring all necessary permits required by Federal or State law have been received. State, county, and community officials, based on knowledge of local conditions and in the interest of safety, may set higher standards for construction in the SFHA. If the State, county, or community has adopted more restrictive or comprehensive floodplain management criteria, these criteria take precedence over the minimum NFIP criteria.

The basis of this LOMR is, in whole or in part, a channel-modification/culvert project. NFIP regulations, as cited in Paragraph 60.3(b)(7), require that communities ensure that the flood-carrying capacity within the altered or relocated portion of any watercourse is maintained. This provision is incorporated into your community's existing floodplain management regulations. Consequently, the ultimate responsibility for maintenance of the modified channel and culverts rests with your community.

This determination has been made pursuant to Section 206 of the Flood Disaster Protection Act of 1973 (Public Law 93-234) and is in accordance with the National Flood Insurance Act of 1968, as amended (Title XIII of the Housing and Urban Development Act of 1968, Public Law 90-448), 42 U.S.C. 4001-4128, and 44 CFR Part 65. Pursuant to Section 1361 of the National Flood Insurance Act of 1968, as amended, communities participating in the NFIP are required to adopt and enforce floodplain management regulations that meet or exceed NFIP criteria. These criteria are the minimum requirements and do not supersede any

State or local requirements of a more stringent nature. This includes adoption of the effective FIRM to which the regulations apply and the modifications described in this LOMR.

FEMA makes flood insurance available in participating communities; in addition, we encourage communities to develop their own loss reduction and prevention programs. Through the *Project Impact: Building Disaster Resistant Communities* initiative, launched by FEMA Director James Lee Witt in 1997, we seek to focus the energy of businesses, citizens, and communities in the United States on the importance of reducing their susceptibility to the impact of all natural disasters, including floods, hurricanes, severe storms, earthquakes, and wildfires. Natural hazard mitigation is most effective when it is planned for and implemented at the local level, by the entities who are most knowledgeable of local conditions and whose economic stability and safety are at stake. For your information, we are enclosing a copy of a pamphlet describing this nationwide initiative. For additional information on *Project Impact*, please visit our Web site at **www.fema.gov/impact**.

If you have any questions regarding floodplain management regulations for your community or the NFIP in general, please contact the Consultation Coordination Officer (CCO) for your community. Information on the CCO for your community may be obtained by contacting the Director, Mitigation Division of FEMA in Denton, Texas, at (940) 898-5127. If you have any questions regarding this LOMR, please contact the FEMA Map Assistance Center, toll free, at 1-877-FEMA MAP (1-877-336-2627).

Sincerely,

Alan A. Johnson, P.E., Project Engineer
Hazards Study Branch
Mitigation Directorate

For: Matthew B. Miller, P.E., Chief
Hazards Study Branch
Mitigation Directorate

Enclosures

cc: Ms. Susan M. Calongne, P.E.
City/County Floodplain Administrator
City of Albuquerque/Bernalillo County

Mr. John P. Kelly, P.E.
Executive Engineer
Albuquerque Metropolitan Arroyo
Flood Control Authority

Mr. Martin J. Garcia, P.E.
Director, Public Works Division
Bernalillo County

Mr. John J. Andrews, P.E.
Principal
The Larkin Group, Inc.

CHANGES ARE MADE IN DETERMINATIONS OF BASE FLOOD ELEVATIONS FOR THE UNINCORPORATED AREAS OF BERNALILLO COUNTY, NEW MEXICO, UNDER THE NATIONAL FLOOD INSURANCE PROGRAM

On September 20, 1996, the Federal Emergency Management Agency identified Special Flood Hazard Areas (SFHAs) in the unincorporated areas of Bernalillo County, New Mexico through issuance of a Flood Insurance Rate Map (FIRM). The Mitigation Directorate has determined that modification of the elevations of the flood having a 1-percent chance of being equaled or exceeded in any given year (base flood) for certain locations in this community is appropriate. The modified base flood elevations (BFEs) revise the FIRM for the community.

The changes are being made pursuant to Section 206 of the Flood Disaster Protection Act of 1973 (Public Law 93-234) and are in accordance with the National Flood Insurance Act of 1968, as amended (Title XIII of the Housing and Urban Development Act of 1968, Public Law 90-448), 42 U.S.C. 4001-4128, and 44 CFR Part 65.

A hydraulic analysis was performed to incorporate the effects of a concrete-lined channel with a 10-foot bottom width and 2:1 side slopes along North Arroyo De Domingo Baca from Tramway Boulevard to Tramway Lane, three 6-foot by 10-foot reinforced-concrete box culverts under Tramway Lane, and associated inlet work and has resulted in a decrease in SFHA width, and decreased BFEs for North Arroyo de Domingo Baca from Tramway Boulevard to just upstream of Tramway Lane. The aforementioned channelized portion of North Arroyo de Domingo Baca contains base flood. The table below indicates existing and modified BFEs for selected locations along the affected lengths of the flooding source(s) cited above.

Location	Existing BFE (feet)*	Modified BFE (feet)*
Approximately 450 feet upstream of Tramway Boulevard	2*	None**

*Depth above ground, rounded to the nearest whole foot
**Base flood contained in channel

Under the above-mentioned Acts of 1968 and 1973, the Mitigation Directorate must develop criteria for floodplain management. To participate in the National Flood Insurance Program (NFIP), the community must use the modified BFEs to administer the floodplain management measures of the NFIP. These modified BFEs will also be used to calculate the appropriate flood insurance premium rates for new buildings and their contents and for the second layer of insurance on existing buildings and contents.

Upon the second publication of notice of these changes in this newspaper, any person has 90 days in which he or she can request, through the Chief Executive Officer of the community, that the Mitigation Directorate reconsider the determination. Any request for reconsideration must be based on knowledge of changed conditions or new scientific or technical data. All interested parties are on notice that until the 90-day period elapses, the Mitigation Directorate's determination to modify the BFEs may itself be changed.

Any person having knowledge or wishing to comment on these changes should immediately notify:

The Honorable Tom Rutherford
Chair, Board of County Commissioners
Bernalillo County
2400 Broadway Southeast
Albuquerque, NM 87102

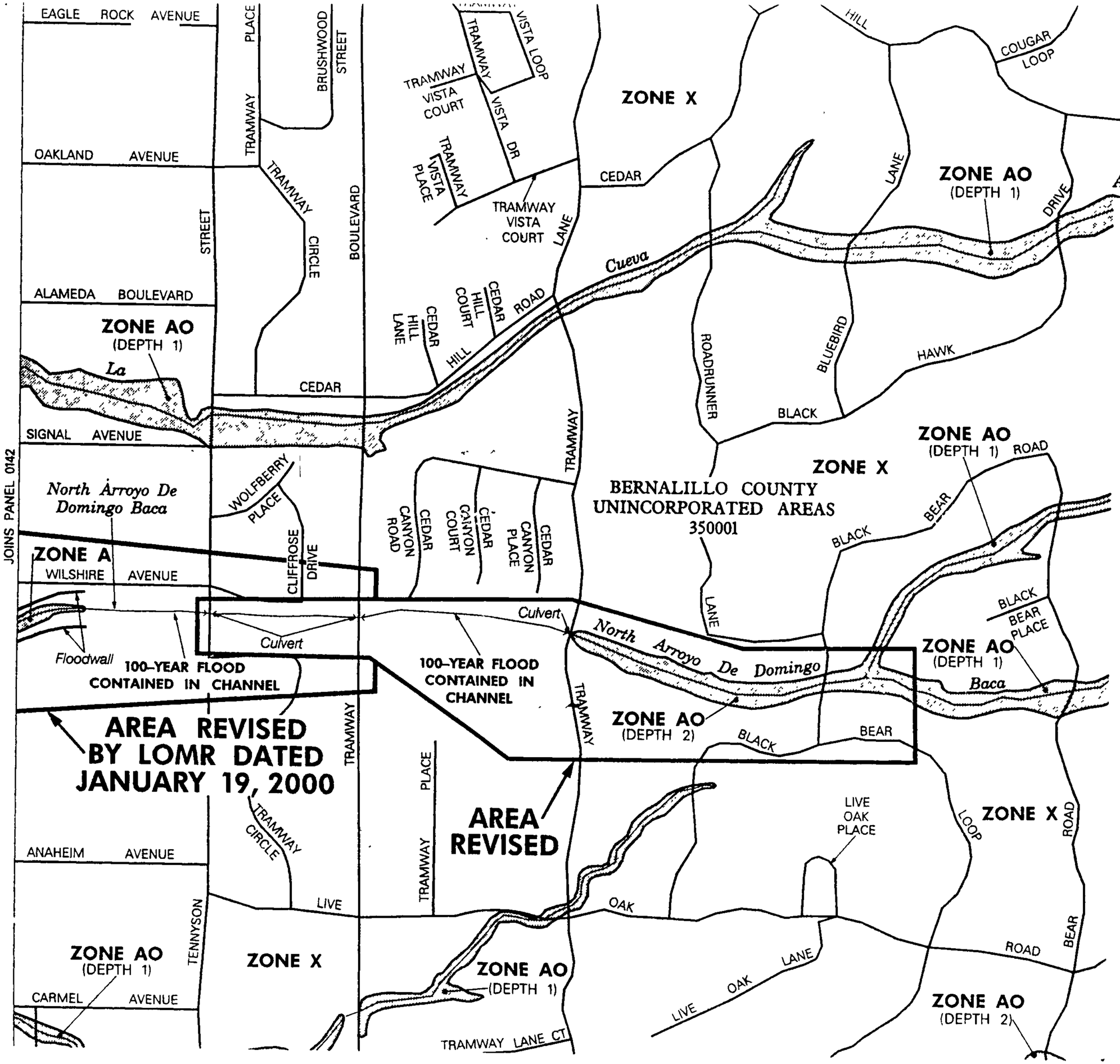

NATIONAL FLOOD INSURANCE PROGRA

FIRM

FLOOD INSURANCE RATE MAF

BERNALILLO COUNTY
NEW MEXICO AND
INCORPORATED AREA

PANEL 161 OF 825
(SEE MAP INDEX FOR PANELS NOT PRINTEI

CONTAINS:
COMMUNITY NUMBER PANEL SUFF

REVISED TO
REFLECT LOMF
DATED MAR 3 1 200

MAP NUMBEI
35001C0161

EFFECTIVE DATE
SEPTEMBER 20, 199

Federal Emergency Management Agen

Federal Emergency Management Agency

Washington, D.C. 20472

February 9, 2000

Ms. Susan M. Calongne, P.E.
County Floodplain Administrator
Bernalillo County
2400 Broadway Southeast
Albuquerque, NM 87102

IN REPLY REFER TO:
Case No.: 00-06-614P
Community: Bernalillo County, New Mexico
Community No.: 350001

316-ACK.FRQ

Dear Ms. Calongne:

This responds to your request dated January 20, 2000, that the Federal Emergency Management Agency (FEMA) issue a revision to the Flood Insurance Rate Map (FIRM) for Bernalillo County, New Mexico and Incorporated Areas. Pertinent information about the request is listed below.

Identifier:	North Domingo Baca Arroyo from Tramway Boulevard to Tramway Lane
Flooding Source:	North Domingo Baca Arroyo
FIRM Panel(s) Affected:	35001C0161 D

We have completed an inventory of the items that you submitted. We have received the data and the review and processing fee ($3,400) required to begin a detailed technical review of your request. If additional data are required, we will inform you within 30 days of the date of this letter.

Please direct all questions concerning your request to our Mapping Coordination Contractor at the following address:

Michael Baker Jr., Inc.
3601 Eisenhower Avenue, Suite 600
Alexandria, VA 22304

Attention: Mr. Monther S. Madanat
Telephone: (703) 317-6250
Fax: (703) 960-9125

When you write us about your request, please include the case number referenced above in your letter.

If you have any questions concerning FEMA policy, or the National Flood Insurance Program in general, please contact the FEMA Map Assistance Center, toll free, at 1-877-FEMA MAP (1-877-336-2627).

Sincerely,

Alan A. Johnson, P.E., Project Engineer
Hazards Study Branch
Mitigation Directorate

cc: Mr. John P. Kelly, P.E.
Albuquerque Metropolitan Arroyo
Flood Control Authority

Mr. Martin J. Garcia, P.E.
Director of Bernalillo County
Public Works Division

Mr. John J. Andrews
Principal
The Larkin Group, Inc.

County of Bernalillo

State of New Mexico

BOARD OF COUNTY COMMISSIONERS
TOM RUTHERFORD, CHAIR
DISTRICT 3
BARBARA J. SEWARD, VICE CHAIR
DISTRICT 4
KEN SANCHEZ, MEMBER
DISTRICT 1
STEVE D. GALLEGOS, MEMBER
DISTRICT 2
LES HOUSTON, MEMBER
DISTRICT 5
JUAN R. VIGIL, COUNTY MANAGER

MARK J. CARRILLO, ASSESSOR
JUDY D. WOODWARD, CLERK
IRA ROBINSON, PROBATE JUDGE
JOE BOWDICH, SHERIFF
ORLANDO VIGIL, TREASURER

2400 BROADWAY, S.E.
ALBUQUERQUE, NEW MEXICO 87102
PUBLIC WORKS (505) 848-1500

January 20, 2000

Mr. Monther S. Madanat
Michael Baker Jr., Inc.
3601 Eisenhower Avenue, Suite 600
Alexandria, Virginia 22304-6439

RE: Request for a Letter of Map Revision for the North Domingo Baca Arroyo East of Tramway Blvd., Bernalillo County, New Mexico, Community No. 350001, FIRM Panel 35001C0161D, Effective Date 9/20/96, FEMA Case No. 96-06-149R.

Dear Mr. Madanat:

The purpose of this submittal is to request a Letter of Map Revision for the North Domingo Baca Arroyo. This request is to confine the floodplain to the constructed channel, which was constructed by the Albuquerque Metropolitan Arroyo Flood Control Authority. This submittal is a follow-up to the Conditional Letter of Map Revision issued by FEMA on August 14, 1996.

Enclosed with this letter are the Application and Certification forms for requesting revisions to the National Flood Insurance Program maps, along with the As-Built drawings for the improvements. A check in the amount of $3,400.00 is also included for the review fee.

As the Community official, I have reviewed and approved the analyses and plans provided with this submittal. Our Community would greatly appreciate your prompt response and approval for this Letter of Map Revision. If you have any questions concerning this submittal, please call me at (505) 924-3982.

Sincerely,

Susan M. Calongne, P.E.
City/County Floodplain Administrator

Attachments

c: John Kelly, P.E., Albuquerque Metropolitan Arroyo Flood Control Authority (Letter only)
John A. Andrews, P.E., The Larkin Group (Letter only)
Roger Paul, P.E., Bernalillo County Public Works Division (Letter only)
Alan Johnson, FEMA Headquarters (Letter only)
Jack Quarles, FEMA Region VI (Letter only)
File

Al' 'ierque Metropolitan Arroyo Flood Control Authority 2600 PROSPECT N.E. - ALBUQUERQUE, N.M. 87107

NO. B002905

VENDOR: FEMA Federal Emergency Mgnt Agency 1/11/00 CHECK NO. 2905

P.O.NUMBER	INV.NO.	INV.DATE	AMOUNT PAID	DISCOUNT	NET CHECK
	NDBARRO	1/10/00	3,400.00		3,400.00
NORTH DOMINGO BACA ARROYO LOMR					
TOTAL			3,400.00		3,400.00

Albuquerque
Metropolitan
Arroyo
Flood
Control
Authority

2600 PROSPECT N.E. - ALBUQUERQUE, N.M. 87107

FIRST SECURITY BANK
ALBUQUERQUE, NEW MEXICO

95-27 / 1070

NO. B002905

CHECK NO

2905

DATE

AMOUN

THREE THOUSAND *******
OUR HUNDRED AND 00/100 DOLLARS

1/11/00 ******$3,400.00

PAY
TO THE
ORDER
OF

Federal Emergency Mgnt Agency
National Flood Ins. Program
PO Box 3173
Merrifield, VI 22116

Executive Engineer

Business Manager

⑈002905⑈ ⑆107000275⑆601 00109 21⑈

Application for a Letter of Map Revision for the North Domingo Baca Arroyo East of Tramway Blvd. (Case No.: 96-06-149R)

Prepared for the Albuquerque Metropolitan Arroyo Flood Control Authority (AMAFCA)

November 1999

Prepared By
The Larkin Group, Inc.
Consulting Engineers
Formerly Andrews, Asbury & Robert, Inc.
8500 Menaul Blvd. NE
Suite A-440
Albuquerque, New Mexico 87112

Federal Emergency Management Agency

Washington, D.C. 20472

AUG 14 1996

RECEIVED
Andrews, Asbury & Robert, Inc.
Consulting Engineers
DATE AUG 19 1996 JAA
JOB NO. 688 CTA
COMMENTS Paul
FILE

CERTIFIED MAIL
RETURN RECEIPT REQUESTED

IN REPLY REFER TO:
Case No.: 96-06-149R

The Honorable Albert Valdez
Chairman, Board of County Commissioners
Bernalillo County
One Civic Plaza, Northwest
Albuquerque, New Mexico 87102

Community: Bernalillo County, New Mexico
Community No.: 350001

104

Dear Mr. Valdez:

This responds to a letter dated July 26, 1996, from Mr. John A. Andrews, P.E., Andrews, Asbury & Robert, Inc. (AAR), to the Federal Emergency Management Agency (FEMA) regarding the effective Flood Insurance Rate Map (FIRM) and Flood Insurance Study (FIS) report for Bernalillo County, New Mexico. With his letter, Mr. Andrews provided additional information to support a December 14, 1995, request for a Conditional Letter of Map Revision (CLOMR) from Ms. Susan M. Calongne, P.E., City/County Floodplain Administrator, County of Bernalillo. Ms. Calongne requested that FEMA evaluate the effects that a proposed concrete-lined channel (10-foot bottom width and 2:1 side slopes) along North Arroyo De Domingo Baca, from Tramway Boulevard to Tramway Lane, and three 6-foot by 10-foot box culverts along North Arroyo De Domingo Baca under Tramway Lane and associated inlet work would have on the effective FIRM and FIS report. As part of her submittal, Ms. Calongne provided information that reflects an existing concrete-lined channel (10-foot bottom width and 2:1 side slopes) along North Arroyo De Domingo Baca, from Tramway Boulevard to approximately 325 feet downstream of Tramway Boulevard.

A CLOMR was issued on March 22, 1996 (copy enclosed), in response to Ms. Calongne's December 14 letter. The March 22 CLOMR stated our concerns regarding possible flow redirection upstream of Tramway Lane, specifically at Juniper Hill Road and Black Bear Road, that would result in floodwaters bypassing the inlet work at Tramway Lane. We requested an analysis demonstrating that all possible flowpaths of the floodwaters would enter the project during the flood having a 1-percent chance of being equaled or exceeded in any given year (base flood). With letters dated July 9 and July 26, 1996, Mr. Andrews submitted information demonstrating that during the base flood event, all possible flowpaths of the floodwaters will enter the project. Therefore, the flow redirection concerns stated in the March 22 CLOMR are no longer an issue, and this CLOMR supersedes the March 22 CLOMR.

All data required by FEMA to evaluate this request were submitted with Ms. Calongne's December 14 letter and with Mr. Andrews' July 9 and July 26 letters.

In her December 14 letter, Ms. Calongne certified that the project is a flood-control project that is sponsored by a Federal, State, or local government, is for public benefit, and is primarily intended for flood loss reduction to insurable structures in identified flood hazard areas that were in existence prior to commencement of the flood-control project. Therefore, in accordance with Section 72.5 of the National Flood Insurance Program (NFIP) regulations, the fees associated with our review of this CLOMR have been waived.

We have reviewed the data submitted and the flood data used to prepare the effective FIRM for Bernalillo County, New Mexico. We believe that if the proposed project is constructed as described in the report entitled "AMAFCA, North Domingo Baca Arroyo East of Tramway Blvd., Application for Conditional Letter of Map

Revision," dated August 1995, and Sheets 3 through 6 of the constructions plans entitled "North Domingo Baca Arroyo, Tramway Boulevard N.E. to Tramway Lane N.E.," dated December 1994, both prepared by AAR, a revision to the FIRM would be warranted.

The purpose of the proposed project is to collect runoff associated with the base flood on North Arroyo De Domingo Baca upstream of Tramway Lane and to convey the flood and accompanying sediment load safely to Tramway Boulevard. The analysis submitted indicates that the sediment load expected to accompany a flood of that magnitude is 4 percent by volume of the floodflow. The analysis also indicates that 20 percent of the runoff generated in the area labeled "Basin D" on the submitted drainage area map crosses the drainage divide and enters the North Arroyo De Domingo Baca drainage basin.

Our review of the submitted information indicates that sediment loads may be as high as 6 percent by volume of the floodflow and that more than 20 percent of the runoff generated in Basin D could contribute to flooding along North Arroyo De Domingo Baca. We assessed the proposed project's capacity and believe that, if built as designed, the project will have the capacity to convey the base flood safely, including a sediment load of 6 percent by volume if all the runoff generated in Basin D enters North Arroyo De Domingo Baca above Tramway Lane.

As a result of the proposed project, the base flood will be contained in the existing channel downstream of Tramway Boulevard, the proposed channel between Tramway Boulevard and Tramway Lane, and the proposed culverts under Tramway Lane. The width of the Special Flood Hazard Area (SFHA), an area subject to the base flood, will decrease from approximately 325 feet downstream of Tramway Boulevard to approximately 250 feet upstream of Tramway Lane. The maximum decrease in SFHA width, approximately 325 feet, will occur approximately 225 feet downstream of Tramway Boulevard.

Upon completion of the project, your community may submit the data listed below and request that we make a final determination on revising the effective FIS report and FIRM.

- As-built plans, certified by a registered professional engineer, of all proposed project elements

- Community acknowledgment of the map revision request

- Certification that all fill placed in the currently effective base floodplain and below the proposed base flood elevation (BFE) is compacted to 95 percent of the maximum density obtainable with the Standard Proctor Test method issued by the American Society for Testing and Materials (ASTM Standard D-698) or an acceptable equivalent method for all areas to be removed from the base floodplain

After receiving appropriate documentation to show that the project has been completed, FEMA will initiate a revision to the FIRM and FIS report. Because the BFEs would change as a result of this project, a 90-day appeal period would be initiated, during which community officials and interested persons may appeal the revised BFEs based on scientific or technical data.

The basis of this CLOMR is, in whole or in part, a proposed channel-modification and culvert project. Paragraph 60.3(b)(7) of the NFIP regulations requires that communities "assure that the flood-carrying capacity within the altered or relocated portion of any watercourse is maintained." This provision is incorporated into your community's existing floodplain management regulations. Consequently, your community must agree to accept responsibility for the maintenance of the modified channel before allowing its construction.

This response to Ms. Calongne's request is based on minimum floodplain management criteria established under the NFIP. Your community is responsible for approving all proposed floodplain development, including this request, and for assuring that the necessary permits required by Federal or State law have been received. State and community officials, based on knowledge of local conditions and in the interest of human safety, may set higher standards for construction or may limit development in floodplain areas. If the State of New Mexico or your community has adopted more restrictive or comprehensive floodplain management criteria, those criteria take precedence over the minimum NFIP requirements.

If you have any questions regarding floodplain management regulations for your community or the NFIP in general, please contact the Consultation Coordination Officer (CCO) for your community. Information on the CCO for your community may be obtained by contacting the Director, Mitigation Division of FEMA in Denton, Texas, at (817) 898-5127. If you have any technical questions regarding this CLOMR, please contact Mr. Alan Johnson of our staff in Washington, DC, either by telephone at (202) 646-3403 or by facsimile at (202) 646-4596.

Sincerely,

Michael K. Buckley, P.E., Chief
Hazard Identification Branch
Mitigation Directorate

Enclosure

cc: Ms. Susan M. Calongne, P.E.
City/County Floodplain Administrator
County of Bernalillo

Mr. Larry A. Blair, P.E.
Executive Engineer
Albuquerque Metropolitan Arroyo
Flood Control Authority

Mr. John A. Andrews, P.E.
Andrews, Asbury & Robert, Inc.

TABLE OF CONTENTS

I. FORM 1 Revision Requester and Community Official

II. FORM 5 Riverine / Coastal Mapping

III. FORM 6 Channelization

Form 1

FEDERAL EMERGENCY MANAGEMENT AGENCY **REVISION REQUESTER AND COMMUNITY OFFICIAL**	O.M.B No. 3067-0148 Expires April 30, 2001

PUBLIC BURDEN DISCLOSURE NOTICE

Public reporting burden for this form is estimated to average 2.13 hours per response. The burden estimate includes the time for reviewing instructions, searching existing data sources, gathering and maintaining the needed data, and completing and reviewing the form. Send comments regarding the accuracy of the burden estimate and any suggestions for reducing this burden to: Information Collections Management, Federal Emergency Management Agency, 500 C Street, S.W., Washington DC 20472; and to the Office of Management and Budget, Paperwork Reduction Project (3067-0148), Washington, DC 20503.

You are not required to respond to this collection of information unless a valid OMB Control Number is displayed in the upper right corner of this form.

1. REQUESTED RESPONSE FROM FEMA

This request is for a:

☐ CLOMR A letter from FEMA commenting on whether a proposed project, if built as proposed, would justify a map revision, or proposed hydrology changes (See 44 CFR Ch. 1, Parts 60,65 & 72).

☒ LOMR A letter from FEMA officially revising the current NFIP map to show the changes to floodplains, floodway or flood elevations. LOMRs typically decrease flood hazards. (See 44 CFR Ch. 1 Parts 60 & 65.)

☐ Other Describe: _____

2. OVERVIEW

1. The basis for this revision request is (are): (check all that apply)

☒ Physical Change ☐ Improved Methodology/Data ☐ Floodway Revision

☐ Other Describe: SEE ADDITIONAL INFORMATION AND EXPLANATION

Note: A photograph is not required, but is very helpful during review.

Flooding Source: NORTH ARROYO DE DOMINGO BACA (NORTH DOMINGO BACA ARROYO)

3. Project Name/Identifier: NORTH DOMINGO BACA ARROYO - TRAMWAY BLVD. TO TRAMWAY LANE

4. FEMA zone designations affected: AO
(example: A, AH, AO, A1-A30, A99, AE, V, V1-V30, VE, B, C, D, X)

5. The NFIP map panel(s) affected for all impacted communities is (are):

Community No.	Community Name	State	Map No.	Panel No.	Effective Date
Ex: 480301 480287	Katy, City Harris County	TX TX	480301 48201C	0005D 0220G	02/08/83 09/28/90
350001	ALBUQUERQUE, BERNALILLO COUNTY	NM	350001	0161D	09/20/96

6. The area of revision encompasses the following types of flooding and structures. Check all that apply.

Types of Flooding	Structures
☐ Riverine	☒ Channelization
☐ Coastal	☐ Levee/Floodwall
☐ Alluvial fan	☐ Bridge/Culvert
☒ Shallow Flooding (e.g. Zones AO and AH)	☐ Dam
☐ Lakes	☐ Fill
☐ Other (describe)	☐ Other (describe)

PLEASE REFER TO THE INSTRUCTIONS FOR THE APPROPRIATE MAILING ADDRESS

4. ENCROACHMENT INFORMATION

1. Does the State have jurisdiction over the floodway or its adoption by communities participating in the NFIP? ☐ Yes ☒ No

If Yes, attach a copy of a letter notifying the appropriate State agency of the floodway revision and documentation of the approval of the revised floodway by the appropriate State agency.

2. Does the development in the floodway cause the 1% annual chance (base) elevation to increase at any location by more than 0.000 feet? ☐ Yes ☒ No ☐ N/A

3. Does the cumulative effect of all development that has occurred since the effective SFHA was originally identified cause the base flood elevation to increase at any location by more than one foot (or other increase limit if community or state has adopted more stringent criteria - even if a floodway has not been delineated by FEMA)? ☐ Yes ☒ No

If the answer to either items is Yes, please attach documentation that all requirements of Section 65.12 of the NFIP regulations have been met, regarding evaluation of alternatives, notice to individual legal property owners, concurrence of CEO, and certification that no insurable structures are impacted.

5. MAINTENANCE RESPONSIBILITY

The community is willing to assume responsibility for ☒ performing ☐ overseeing compliance with the maintenance and operation plans of the NORTH DOMINGO BACA ARROYO (Name) flood control structure. If not performed promptly by an owner other than the community, the community will provide the necessary services without cost to the Federal government.

Operation and maintenance plans are attached. ☐ **Yes** ☒ **No** ☐ **N/A**

6. REVIEW FEE

The review fee for the appropriate request category has been included. ☒ Yes Fee amount $3,400.00

OR

This request is based on a federally sponsored flood-control project where 50 percent or more of the project's cost is federally sponsored, or the request is based on detailed hydrologic and hydraulic studies conducted by Federal, State, or local agencies to replace approximate studies conducted by FEMA and shown on the effective FIRM; thus the project is fee exempt. ☐ Yes

Please see Instructions for Fee Amounts

7. SIGNATURE

Note: **I understand that my signature indicates that all information submitted in support of this request is correct**

John P Colby
Signature of Revision Requester

Printed Name and Title of Revision Requester

AMAFCA
Company Name

Telephone No. 11-22-99 Date

Note: **Signature indicates that the community understands, from the revision requester, the impacts of the revision on flooding conditions in the community.**

Susan Calongne
Signature of Community Official

SUSAN M. CALONGNE, P.E.
CITY/COUNTY FLOODPLAIN ADMINISTRATOR
Printed Name and Title of Community Official

CITY OF ALBUQUERQUE
BERNALILLO COUNTY, NEW MEXICO
Community Name

1-(505)-924-3982
Telephone No. Date

CERTIFICATION BY REGISTERED PROFESSIONAL ENGINEER AND/OR LAND SURVEYOR

This certification is in accordance with 44 CFR Ch. 1, Sect 65.2

John A. Andrews
Signature

JOHN A. ANDREWS PRINCIPAL
Printed Name and Title of Revision Requester

Registr No. 3960 Expires (Date) 12-31-2000 State NM

Type of License/Expertise: Civil Engineering

Check which forms have been included with this request

Form Name and (Number)	Required if .....
☐ **Hydrologic** (3)	new or revised discharges
☐ **Hydraulic** (4)	new or revised water-surface elevations
☒ **Mapping** (5)	floodplain/floodway changes
☒ **Channelization** (6)	channel is modified
☐ **Bridge/Culvert** (7)	addition/revision of bridge/culvert
☐ **Levee/Floodwall** (8)	addition/revision of levee/floodwall
☐ **Coastal** (9)	new or revised coastal elevations
☐ **Coastal Structures** (10)	addition/revision of coastal structure
☐ **Dam** (11)	addition/revision of dam
☐ **Alluvial Fan** (12)	structures proposed on alluvial fan

North Domingo Baca Arroyo

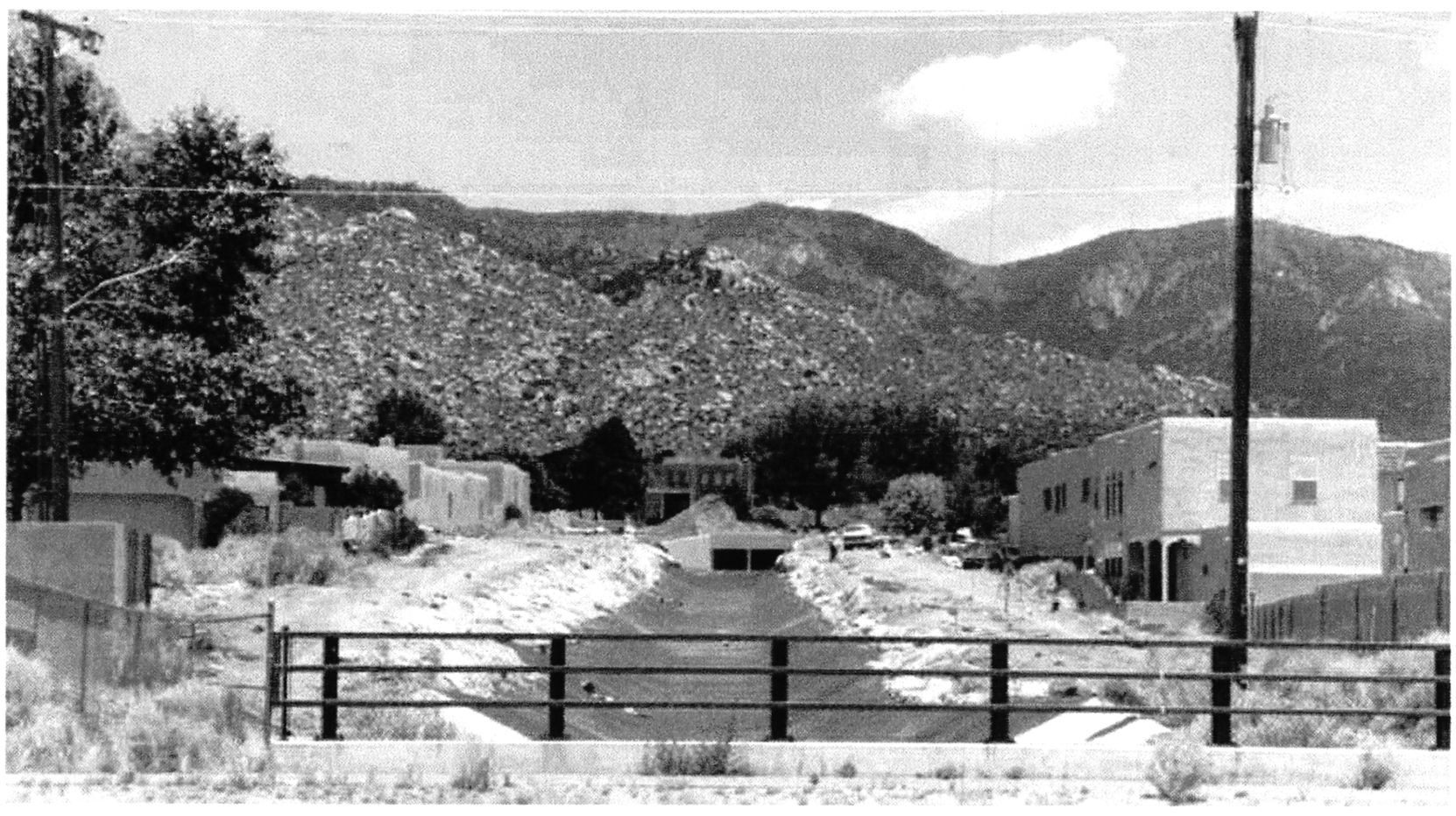

Albuquerque Metropolitan Arroyo Flood Control Authority

PROJECT MAINTENANCE

Plan No. 3,
December, 1999

1. **Definition**: Maintenance is defined as all measures taken to ensure that each facility will operate as intended by design, and includes repairs, improvements, and all measures taken to assure that public welfare and safety are protected.

2. **General:**

Maintenance and repairs will be accomplished by the most expeditious and cost-effective means. Both in-house forces and contractors may be used.

A. Priority of effort will be:

1. Correction of problems which could lead to failure and subsequent loss of life or major property damage (e.g., concrete channel repairs, blockages of outlets and channels).

2. Installation or repair of features to protect public safety (e.g., guardrails, traffic barriers, reflectors, delineators).

3. Repairs which are necessary to prevent deterioration to a condition which could lead to failure (e.g., serious erosion, gabion repairs).

4. Work to maintain stormwater capacity (e.g., sediment, vegetation, and trash removal).

5. Routine maintenance (e.g., normal erosion, replacement or riprap, concrete joint repairs).

6. Minor/esthetic maintenance (e.g., minor sediment graffiti).

3. Guidelines for allocation of effort:

A. In-house crew

1. Emergencies

2. Safety - installation of new safety features; maintenance and upgrade of existing

3. Inspection

4. Concrete repair, except large jobs

5. Jobs for which crew has experience, (e.g., silt removal in sensitive locations (Alameda Outlet Structure, NDC)

6. Routine and repetitive tasks

7. Short duration jobs (2 or less weeks duration)

B. Contractors

1. Production jobs, (e.g., larger dirt or silt moving)

2. Specialized tasks for which we lack in-house expertise and/or equipment

3. Appropriate backlog tasks which cannot be scheduled in a timely manner by Maintenance Crew

C. Other

1. Contractors and others may remove sediment from AMAFCA facilities, in accordance with Resolution 1991-10. Permits may be issued by the Business Manager after appropriate approval by other the Executive Engineer, Field Engineer, and/or Maintenance Superintendent.

4. Administration and Records

A. The Field Engineer and Maintenance Superintendent will develop annual and monthly maintenance (including safety) schedules.

B. Insofar as possible, records of maintenance work (written, photographic, costs) will be kept in each project OMI folder.

C. Field Engineer and Maintenance Superintendent will brief Executive Engineer monthly on accomplishments, schedule(s), safety, and other matters of interest.

Adopted: John P. Kelly Date: 12-16-99

John P. Kelly
Executive Engineer

Albuquerque Metropolitan Arroyo Flood Control Authority

PROJECT INSPECTIONS

Plan No. 3,
December 1999

1. **Definitions:**

A. Inspection. Examination of an Authority facility to ensure its proper operation and to identify needed maintenance and repairs.

2. **Procedures**

A. Intervals

1. A detailed, formal inspection of each Authority facility will be made at least once per year, normally in the spring before flood season. This inspection will be accomplished using a check list (See Inspection Guides and Checklist file). Certain facilities (e.g., NDC and SDC) require more frequent inspections.

2. An inspection will be conducted after each major sto rm event which affects a flood control facility, with the primary objective being to identify immediate measures needed to restore the facility's ability to function as designed.

3. An informal inspection of each facility will be conducted, normally in the fall. The formal checklist is not required, but written record may be made.

4. Principal spillway conduits at Dams will be inspected via remote camera ever four years. Conduits will be visually inspected during each annual inspection from the ends with lights. Physical inspection will be done if needed, in accordance with confined space entry procedures.

5. Dam crests will be surveyed for settlement every four years. Mylar drawings will be updated with the elevation information, with copies furnished to the New Mexico State Engineer Office.

a. Records

1. Formal checklists will be completed, reviewed by the Field Engineer and Executive Engineer, and filed in the project's OMI folder.

2. Sheet G-2 (required Maintenance/Repairs) will be duplicated, with a copy of

the Maintenance Superintendent, to serve as a work directive.

3. Results of informal inspections will be reported by informal notes, or in briefings to the Field Engineer.

4. The Field Engineer is responsible for developing inspection schedules.

5. Progress on inspections will be reported monthly to the Executive Engineer.

3. As a matter of professional courtesy, and when convenient, AMAFCA personnel will informally inspect drainage facilities owned by other public agencies, and advise them of problems.

Adopted: Date: 12-16-99

John P. Kelly

John P. Kelly
Executive Engineer

Albuquerque Metropolitan Arroyo Flood Control Authority

Emergency Operations Plan for Flood Emergencies

Plan No. 5

December, 1999

I **Purpose:**

This plan provides a framework for action in the event of a major flood emergency.

II **Mission**:

A. Operate AMAFCA projects to minimize loss of life and property damage.

B. Restore damaged flood control facilities to operation as soon as possible.

C. Assist other agencies as needed.

III **Procedures**:

A. During rainstorms, AMAFCA personnel, as needed or directed, will observe and monitor flood control facilities to ensure their proper operation. Any AMAFCA personnel have the authority to request additional assistance from AMAFCA staff and to implement this Emergency Operations Plan as needed. Initiation of this plan may also be at request of other agencies.

IV **Specific Instructions:**

A. **Executive Engineer**

1. Direct AMAFCA activities.

2. Coordinate acivities with other agencies.

3. Request State and Federal assistance.

4. Execute and administer contracts for emergency work.

4. Call for Emergency Board Meeting, if needed.

B. **Field Engineer**

1. Keep Executive Engineer informed

2. Direct field activities

3. Inspect or cause to be inspected all affected AMAFCA facilities.

4. Provide Maintenance Superintendent with prioriteis and technical guidance.

5. Recommend emergency actions to Executive Engineer. If Executive Engineer is not available, take action.

6. As time permits, inspect impacted flood control facilities managed by other agencies.

C. **Drainage Engineer**

1. Keep Executive Engineer informed

2. Establish and organize AMAFCA office as an Emergency Operations Center

3. Retrieve as built drawings, innundation maps, and technical reports as necessary to assist and relay information to field forces.

4. Recommend emergency actions to Field Engineer and Executive Engineer. If they are not available, take action.

5. Contact volunteer rainfall observers, USGS and National Weather Service for event information. Relay such to others.

6. Assist in inspection of affected facilities.

D. **Development Review Engineer**

1. Keep Executive Engineer informed

2. Assist in inspection of affected facilities.

3. Provide Maintenance Superintendent with priorities and technical guidance.

4. As time permits, inspect impacted flood control facilities managed by other agencies.

5. Arrange for aerial photographic coverage of flooding and flood damage.

E. **Real Estate Manager**

1. Report to City of Albuquerque Emergency Operations Center as AMAFCA's representative. EOC is in Basement of Police Building.

2. Act as liaison and communications link between AMAFCA and other agencies.

3. Assist Executive Engineer as directed.

F. **Maintenance Superintendent**

1. Call in necessary crew to respond.

2. Deploy men and equipment to ensure that affected AMAFCA dams,. Channels and other projects are inspected as soon as possible.

3. Assemble men and equipment at projects of concern.

4. Advise Field Engineer where problems might exist.

5. Maintain communication with AMAFCA office.

6. Assess need for outside support, and take action if necessary.

G. **Maintenance Crew**

1. Report to office. If delayed, phone in.

2. Activate radios, warm up equipment and trucks, load equipment on transport vehicles.

3. Follow instructions of Maintenance Superintendent or Field Engineer.

H. **Business Manager**

1. Manage AMAFCA office as an Emergency Operations Center

2. Maintain radio and telephone contact with Executive Engineer and field personnel.

3. Keep Board of Directors informed. As directed by Executive Engineer, poll Board to authorize emergency purchases, contacts and other activities.

4. Provide information to press.

5. Assist Executive Engineer in preparing and executing emergency contracts.

I. **Executive Secretary**

1. Operate communication equipment

2. Provide support to Emergency Operations Center

3. Keep records of communications and actions. Use speaker phone and tape recorder, if necessary.

V. Communications and Control

A. AMAFCA

1.	Office Telephone		(505) 884-2215
2.	Emergency Pager		(505) 251-4342
3.	Home and mobile telephones		attached
4.	Radio	High Band:	Receive 453.625 MHz Transmit 458.625 MHZ
5.	AMAFCA Fax		(505) 884-0214

B. Field and mobile units to maintain radio or periodic telephone contact with AMAFCA office.

C. All personnel advise Executive Engineer and Field Engineer of severe flooding, predicted severe flooding, or other severe circumstances.

D. Normal chain of command applies.

Adopted: John P Kelly Date: 12-16-99

John P. Kelly
Executive Engineer

Albuquerque Metropolitan Arroyo Flood Control Authority

PROJECT OPERATIONS

Plan No.3,
December, 1999

1. Definitions:

   A. **Operations**
   Within the context of "Operations, Maintenance, and Inspection", Operations is defined as the functioning of a flood control facility during or immediately after a storm. It includes the opening/closing of gates, valves, outlet works (if the facility has them) and may also involve hasty or emergency measures, if necessary to ensure proper functioning of the facility.

   B. **Emergency Operations**
   See Emergency Operations Plan No. 5, dated December, 1999.

2. General: During rainstorms, AMAFCA personnel, as needed or directed, will observe and monitor flood control facilities to ensure their proper operation.

3. Specific Instructions:

   A. As weather conditions dictate, AMAFCA personnel will travel to affected areas or flood control facilities, with radio-equipped vehicles. This procedure will be in effect during both on and off duty hours.

   B. Through communications, facilities affected will be identified, and closely monitored for proper operation and safety. Additional Authority forces will be called out, as required.

   C. Photographs will be taken, where possible.

   D. Flow or detention dam stages (depths) and times will be recorded.

   E. Notes of project operation characteristics will be made, particularly where unusual conditions may be noted.

   F. If necessary, assist police and rescue forces, as needed in opening gates, giving location instructions, etc. AMAFCA employees will not attempt rescue of victims in channels.

   G. Following storms, project OMI folders will be updated with information gathered during the operation and any remedial actions immediately planned and executed.

H. After a facility has functioned from stormwater, at the first opportunity, a detailed inspection will be made by an Authority engineer. Use of checklist is recommended.

4. Preparatory Instructions:

A. Before each flood season, the following will be accomplished:

1. Stock adequate supplies of film (Maintenance Superintendent)

2. Ensure vehicles, radios, lights, etc., are in good condition (Maintenance Superintendent).

3. Repaint, as needed, depth gauges (Maintenance Superintendent)

4. Ensure all gates, valves, outlet works function properly, and keep wheels and cranks property stored (Field Engineer, Maintenance Superintendent).

5. Keep cameras, flashlights, spray paint, rescue equipment available in vehicles (Field Engineer, Maintenance Superintendent).

B. During the flood season, the following applies:

1. Vacations and absences will be limited and controlled. (All, especially field personnel).

2. A daily assessment of storm potential will be made, and plans for response discussed (Field Engineer, Drainage Engineer, Maintenance Superintendent).

3. Maintenance Superintendent will take home a radio-equipped Authority vehicle.

4. Continuous inspections of Authority flood control facilities will be made. Secondary, incidental inspections may be made of facilities owner/operated by other to ensure complementary safe operation.

Adopted: John P Kelly Date: 12-16-99

John P. Kelly
Executive Engineer

FORM 1 – ADDITIONAL INFORMATION AND EXPLANATION

2. Overview:

This request is in reference to Case No.: 96-06-149R. This CLOMR has been reviewed and approved by FEMA in a letter dated August 14, 1996 from Michael K. Buckley, P.E., Chief Hazard Identification Brach Mitigation Directorate. Pursuant to that letter the certified as-built plans are being submitted (Form 6) along with certification that all fill placed in the currently effective base floodplain and below the proposed base flood elevation has been compacted to 95% of the maximum density obtained with the Modified Proctor Test (ASTM Standard D-1557) (Form 5).

5. Maintenance and Responsibility:

AMAFCA will operate and maintain the facility. They have a maintenance, operation and flood warning plan for all of their facilities.

Form 5

FEDERAL EMERGENCY MANAGEMENT AGENCY **RIVERINE/COASTAL MAPPING**	O.M.B No. 3067-0148 Expires April 30, 2001

PUBLIC BURDEN DISCLOSURE NOTICE

Public reporting burden for this form is estimated to average 1.5 hours per response. The burden estimate includes the time for reviewing instructions, searching existing data sources, gathering and maintaining the needed data, and completing and reviewing the form. Send comments regarding the accuracy of the burden estimate and any suggestions for reducing this burden to: Information Collections Management, Federal Emergency Management Agency, 500 C Street, S.W., Washington DC 20472; and to the Office of Management and Budget, Paperwork Reduction Project (3067-0148), Washington, DC 20503.

You are not required to respond to this collection of information unless a valid OMB Control Number is displayed in the upper right corner of this form.

Note: Fill out one form for each flooding source studied

Community Name: CITY OF ALBUQUERQUE, BERNALILLO COUNTY, NEW MEXICO

Flooding Source: NORTH ARROYO DE DOMINGO BACA (NORTH DOMINGO BACA ARROYO)

Project Name/Identifier: NORTH DOMINGO BACA ARROYO - TRAMWAY BLVD. TO TRAMWAY LANE

This is a ☒ Manual ☐ Digital submission. *Digital map submissions may be used to update digital FIRMs (DFIRMs). For updating DFIRMs, these submissions must be coordinated with FEMA Headquarters as far in advance as possible.*

1. MAPPING CHANGES

1. A topographic workmap must be submitted showing the following information (check N/A when not applicable):

a. Revised approximate 100-year floodplain boundaries (Zone A)	☐ Yes	☒ No	☐ N/A
b. Revised detailed 100- and 500-year floodplain boundaries.	☒ Yes	☐ No	☐ N/A
c. Revised floodway boundaries	☐ Yes	☐ No	☒ N/A
d. Location and alignment of all cross sections with stationing control indicated.	☐ Yes	☒ No	☐ N/A
e. Stream alignments, road alignments and dam alignments.	☒ Yes	☐ No	☐ N/A
f. Current community boundaries.	☒ Yes	☐ No	☐ N/A
g. Effective 100-year floodplain and floodway boundaries from FIRM/FBFM reduced or enlarged to the scale of the topographic workmap	☒ Yes	☐ No	☐ N/A
h. Tie-ins between the effective and revised 100-, 500-year and floodway boundaries	☒ Yes	☐ No	☐ N/A
i. The requester's property boundaries and community easements	☒ Yes	☐ No	☐ N/A
j. The signed certification of a registered professional engineer	☒ Yes	☐ No	☐ N/A
k. Location and description of reference marks	☒ Yes	☐ No	☐ N/A
l. Vertical datum (example: NGVD, NAVD)	☒ Yes	☐ No	☐ N/A
m. Coastal zone designations tie into adjacent areas not being revised	☐ Yes	☐ No	☒ N/A
n. Location and alignment of all coastal transects used to revise the coastal analyze	☐ Yes	☐ No	☒ N/A
o. V-zone has been delineated to extend landward to the heel of the primary frontal dune	☐ Yes	☐ No	☒ N/A

If any items are marked No or N/A please attach an explanation.

2. What is the source and date of the updated topographic information (example: orthophoto maps, July 1985; filed survey, May 1979, beach profile, June 1987 etc.)?

ORTHOPHOTO MAPS, JAN. 1995 - SEE PLATE 1 FROM CLOMR DATED AUGUST 1995

3. What is the scale and contour interval of the following workmaps?

Effective FIS Scale 1" = 500' Contour Interval NONE

Revision Request Scale 1" = 500' Contour Interval 1" = 10'

NOTE: Revised topographic information must be of equal or greater detail than effective.

4. Attach an annotated FIRM/FBFM at the scale of the effective FIRM/FBFM showing the revised 100- and 500-year floodplain and the floodway boundaries and how they tie into those shown on the effective FIRM/FBFM downstream and upstream of the revisions or adjacent to the area of revision for coastal studies. **FIRM/FBFM attached?** ☒ **Yes** ☐ **No**

PLEASE REFER TO THE INSTRUCTIONS FOR THE APPROPRIATE MAILING ADDRESS

2. EARTH FILL PLACEMENT

1. The fill is: ☒ Existing ☐ Proposed

2. Has fill been/will be placed in the regulatory floodway? ☐ Yes ☒ No
   If Yes, please attach completed Riverine Hydraulic Analysis Form (Form 4).

3. Has fill been/will be placed in floodway fringe (*area between the floodway and 100-year floodplain boundaries*)? ☒ Yes ☐ No

   If Yes, then complete A, B, C, and D below.

   a. Are fill slopes for granular materials steeper than one vertical on one-and-one-half horizontal? ☐ Yes ☒ No

      If Yes, justify steeper slopes _____

      _____

   b. Is adequate erosion protection provided for fill slopes exposed to moving flood waters? (*Slopes exposed to flows with velocities of up to 5 feet per second (fps) during the 100-year flood must, at a minimum, be protected by a cover of grass, vines, weeds, or similar vegetation; slopes exposed to flows with velocities greater than 5 fps during the 100-year flood must, at a minimum, be protected by stone or rock riprap.*)

      ☒ Yes ☐ No

      If No, describe erosion protection provided _____

      _____

   c. Has all fill placed in revised 100-year floodplain been compacted to 95 percent of the maximum density obtainable with the Standard Proctor Test Method or acceptable equivalent method? ☒ Yes ☐ No

   d. Can structures conceivably be constructed on the fill at any time in the future? ☒ Yes ☐ No

   If Yes, attach certification of fill compaction (item 3c. above) by the community's NFIP permit official, a registered professional Engineer, or an accredited soils engineer in accordance with Subparagraph 65.5(a)(6) of the NFIP regulations.

   Fill certification attached ☒ Yes ☐ No

4. Has fill been/will be placed in a V zone? ☐ Yes ☒ No

   If Yes, is the fill protected from erosion by a flood control structure such as a revetment or seawall?

   ☐ Yes ☐ No

   If Yes, attach the Coastal Structures Form (Form 10).

FORM 5 – ADDITIONAL INFORMATION AND EXPLANATION

1. Mapping Changes:

a. The revised floodplain boundary is Zone AO.
c. Floodway boundary revision is not applicable.
d. Cross-sections to numerous to show.
m. Coastal zone not applicable
n. Coastal zone not applicable
o. V-zone not applicable

2. Earth Fill Placement:

The certification that the fill placed in the floodplain is compacted to 95% of the maximum density obtainable with the Modified Proctor Test method (ASTM Standard D-1557) is attached.

PLATE 1 National Flood Insurance Program, Effective Flood Insurance Rate Map (FIRM) Effective Date: September 20, 1996

PLATE 2 Annotated National Flood Insurance Program, Effective Flood Insurance Rate Map (FIRM) Effective Date: September 20, 1996

V

Vinyard & Associates, Inc.

8916-A Adams Street NE
Albuquerque, New Mexico 87113
505/797-9743 505/797-9749 FAX

A

Geotechnical Engineering * Materials Testing * Environmental Engineering

April 6, 1999

AAR-The Larkin Group
8500 Menaul Blvd., NE
Suite A-440
Albuquerque, NM 87112

Attn: Mr. John Andrews, P.E.

Project: North Domingo Baca Arroyo - Tramway Blvd. to Tramway Ln.
V & A Project No. 99-2-121

Gentlemen:

Attached are copies of the Proctor Test Results for the subject project.

Should you have any questions regarding this data, please do not hesitate to call.

Sincerely,

Martin D. Vinyard, P.E.
Vinyard & Associates, Inc.

Attachment: Figure No.: 1

cc: Addressee: (1)
AAR-The Larkin Group - Attn: Mr. Paul Gonzales
AMAFCA - Attn: Ms. Lisa Manwill, P.E.

sls

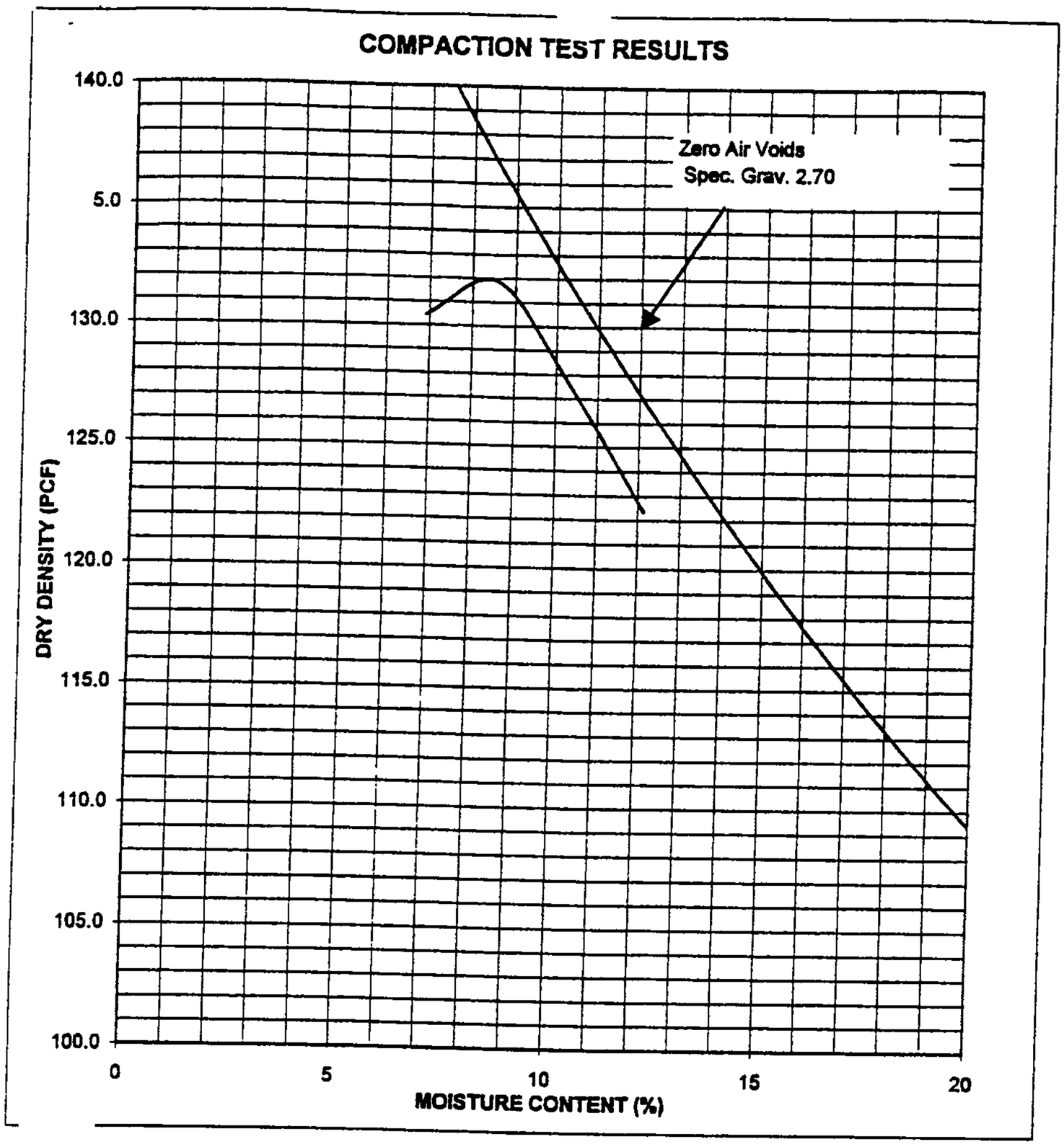

Max Dry Density= 131.9 PCF

Optimum Moist.= 8.4 %

Project Title : North Domingo Baca

VA Project No : 99-2-121 **Date Sampled :** 3/30/99 **Sample No. :** 99-822

Sample Location : Sta 12+55 S. embankment of channel.

Soil Description : Silty SAND.

Unified Soil Classification : (SM) **AASHTO CLASSIFICATION:**

Test Method : ASTM D1557 B **Specification Used :**

Atterberg Limits: LL 23% **PI** 3% **EST. R-VALUE :**

SIEVE ANALYSIS-% PASSING											
3	1 1/2	3/4	3/8	No. 4	No. 8	No. 16	No. 30	No. 50	No. 100	No. 200
	100	99	96	87	70	56	48	41	35	26.3
SPECIFICATIONS										

Figure 1

V

Vinyard & Associates, Inc.

8916-A Adams Street NE
Albuquerque, New Mexico 87113
505/797-9743 505/797-9749 FAX

A

Geotechnical Engineering * Materials Testing * Environmental Engineering

April 20, 1999

AAR-The Larkin Group
8500 Menaul Blvd., NE
Suite A-440
Albuquerque, NM 87112

RECEIVED
MAY 04 1999
AMAFCA

Attn: Mr. John Andrews, P.E.

Project: North Domingo Baca Arroyo - Tramway Blvd. to Tramway Ln.
V & A Project No. 99-2-121

Gentlemen:

Attached are copies of the Earthwork Compaction Test Results for the subject project.

Should you have any questions regarding this data, please do not hesitate to call.

Sincerely,

Jesse Carlin

Jesse Carlin

Vinyard & Associates, Inc.

Martin D. Vinyard, P.E.

Attachment: Report No.'s 1 - 4

cc: Addressee: (1)
AAR-The Larkin Group - Attn: Mr. Paul Gonzales
AMAFCA - Attn: Ms. Lisa Manwill, P.E.

kdv

V
&
A

COMPACTION TEST RESULTS

PROJECT: North Domingo Baca Arroyo
Tramway Blvd. to Tramway Lane
CLIENT: AAR-The Larkin Group
TECHNICIAN: Jesse Carlin
PROJECT NO.: 99-2-121 REPORT NO.: 1 DATE: 4/12/99

Test No.	Location	Elevation	Proctor Number	Field Moisture (%)	Field Dry Density (PCF)	Relative Compaction (%)	Specified Compaction (%)
1	8" SAS backfil, Sta. 8+77, N Domingo Baca Arroyo	2' above pipe	1	6.8	127.4	97	90

Proctor Test Utilized

Proctor No.	Soil Description	Optimum Moisture Content (%)	Maximum Dry Density (pcf)	Remarks
1	Silty SAND	8.4	131.9	Sta. 12+55 S embankment of channel

WEATHER: Cloudy, 60's

EQUIPMENT: 1-trackhoe, 1-loader, 2-jumping jacks, 1-water house

REMARKS: Contracting personnel informed of the test results.

V
&
A

COMPACTION TEST RESULTS

PROJECT: North Domingo Baca Arroyo — CLIENT: AAR-The Larkin Group
Tramway Blvd. to Tramway Lane — TECHNICIAN: Jesse Carlin
PROJECT NO.: 99-2-121 — REPORT NO.: 2 — DATE: 4/13/99

Test No.	Location	Elevation	Proctor Number	Field Moisture (%)	Field Dry Density (PCF)	Relative Compaction (%)	Specified Compaction (%)
2	N Domingo Baca Arroyo, Sta. 12+58, 8" SAS backfill	2' above pipe	1	7.2	131.9	100	90

Proctor Test Utilized

Proctor No.	Soil Description	Optimum Moisture Content (%)	Maximum Dry Density (pcf)	Remarks
1	Silty SAND	8.4	131.9	Sta. 12+55 S embankment of channel

WEATHER: Cloudy, 60's

EQUIPMENT: 2-trackhoes, 1-loader, 2-jumping jacks, 1-water hose

REMARKS: Contracting personnel informed of the test results.

V
&
A

COMPACTION TEST RESULTS

PROJECT: North Domingo Baca Arroyo — CLIENT: AAR-The Larkin Group
Tramway Blvd. to Tramway Lane — TECHNICIAN: Marcus de la Rosa
PROJECT NO.: 99-2-121 — REPORT NO.: 3 — DATE: 4/15/99

Test No.	Location	Elevation	Proctor Number	Field Moisture (%)	Field Dry Density (PCF)	Relative Compaction (%)	Specified Compaction (%)
3	Manhole base, Sta. 7+52	FSG	1	8.6	128.8	98	95
4	Manhole base, Sta. 10+44	FSG	1	6.6	128.7	98	95

Proctor Test Utilized

Proctor No.	Soil Description	Optimum Moisture Content (%)	Maximum Dry Density (pcf)	Remarks
1	Silty SAND	8.4	131.9	Sta. 12+55 S embankment of channel

WEATHER: Clear and cool

EQUIPMENT: Loader, water hose, tamper, backhoe

REMARKS: Contracting personnel informed of the test results.

V
&
A

COMPACTION TEST RESULTS

PROJECT: North Domingo Baca Arroyo
Tramway Blvd. to Tramway Lane
PROJECT NO.: 99-2-121 REPORT NO.: 4

CLIENT: AAR-The Larkin Group
TECHNICIAN: Marcus de la Rosa
DATE: 4/19/99

Test No.	Location	Elevation	Proctor Number	Field Moisture (%)	Field Dry Density (PCF)	Relative Compaction (%)	Specified Compaction (%)
5	15" RCP pipe at bottom of pipe, Sta. 10+38	FSG	1	6.7	129.7	98	95
6	15" RCP pipe at bottom of pipe, Sta. 7+86	FSG	1	8.9	127.0	96	95

Proctor Test Utilized

Proctor No	Soil Description	Optimum Moisture Content (%)	Maximum Dry Density (pcf)	Remarks
1	Silty SAND	8.4	131.9	Sta. 12+55 S embankment of channel

WEATHER: Clear and warm

EQUIPMENT: Tamper, loader, water truck, trackhoe

REMARKS: Contracting personnel informed of the test results.

V

Vinyard & Associates, Inc.

8916-A Adams Street NE
Albuquerque, New Mexico 87113
505/797-9743 505/797-9749 FAX

A

Geotechnical Engineering * Materials Testing * Environmental Engineering

May 3, 1999

AAR-The Larkin Group
8500 Menaul Blvd., NE
Suite A-440
Albuquerque, NM 87112

RECEIVED
MAY 1 7 1999
AMAFCA

Attn: Mr. John Andrews, P.E.

Project: North Domingo Baca Arroyo - Tramway Blvd. to Tramway Ln.
V & A Project No. 99-2-121

Gentlemen:

Attached are copies of the Proctor Test Results for the subject project.

Should you have any questions regarding this data, please do not hesitate to call.

Sincerely,

Martin D. Vinyard, P.E.
Vinyard & Associates, Inc.

Attachment: Figure 2

cc: Addressee: (1)
AAR-The Larkin Group - Attn: Mr. Paul Gonzales
AMAFCA - Attn: Ms. Lisa Manwill, P.E.

rka

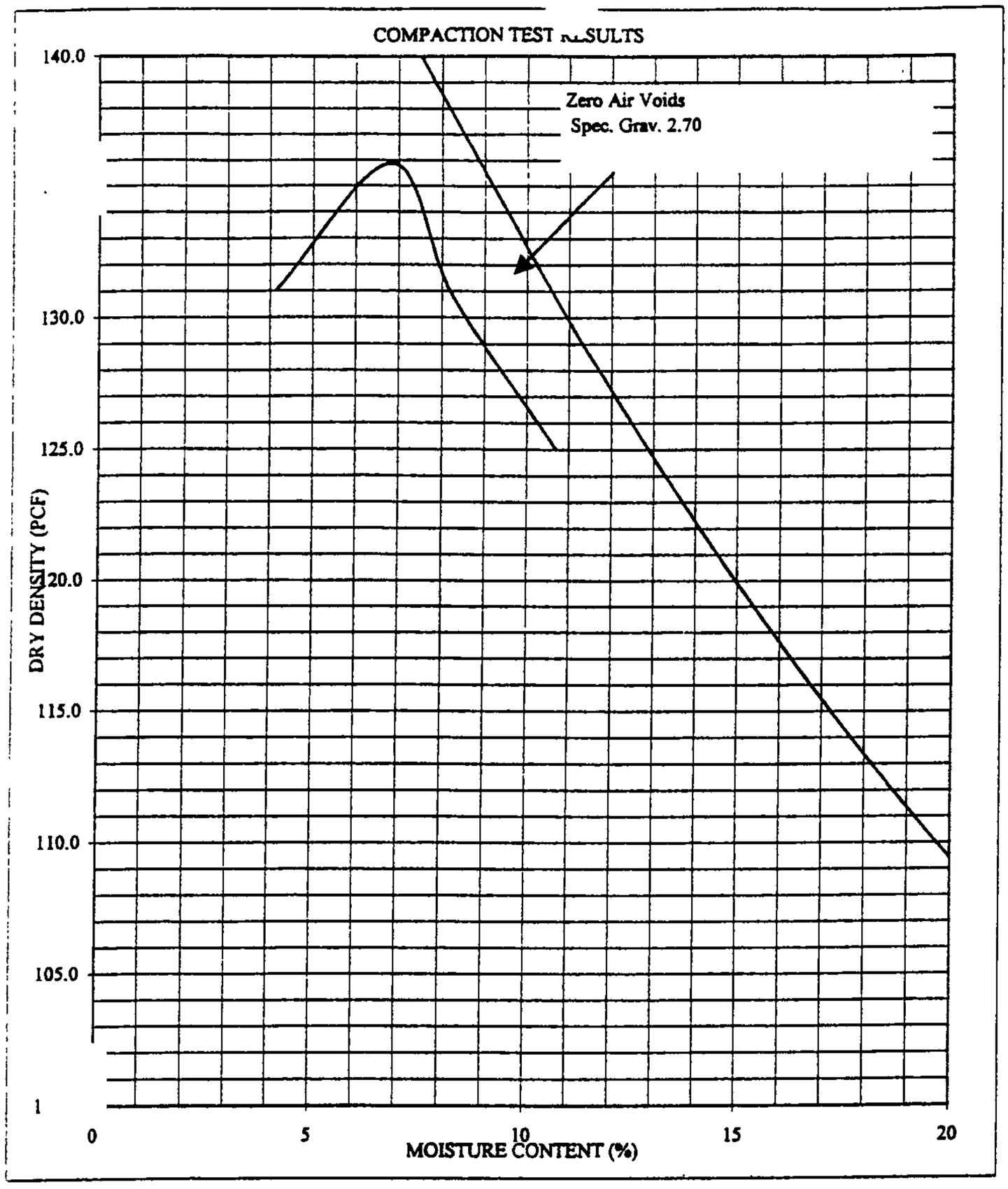

Max Dry Density= 135.9 PCF

Optimum Moist.= 6.9 %

Project Title : North Domingo Baca Arroyo

VA Project No : 99-2-121 **Date Sampled :** 4/28/99 **Sample No. :** 99-1144

Sample Location : Sta 11+50 N. embankment of arroyo, 12' N. of centerline, -1.5' FSG.

Soil Description : Silty SAND.

Unified Soil Classification : (SM) **AASHTO CLASSIFICATION:** A-2-4

Test Method : ASTM D1557 B **Specification Used :**

Atterberg Limits: LL 22% **PI** 3% **EST. R-VALUE :** 47

SIEVE ANALYSIS-% PASSING										
3	1 1/2	3/4	3/8	No. 4	No. 8	No. 16	No. 30	No. 50	No. 100	No. 200
	100	100	99	87	65	47	36	30	24	18.1
SPECIFICATIONS										

Figure: 2

V

Vinyard & Associates, Inc.

8916-A Adams Street NE
Albuquerque, New Mexico 87113
505/797-9743 505/797-9749 FAX

A

Geotechnical Engineering * Materials Testing * Environmental Engineering

May 19, 1999

RECEIVED
JUN - 2 1999
AMAFCA

AAR-The Larkin Group
8500 Menaul Blvd., NE
Suite A-440
Albuquerque, NM 87112

Attn: Mr. John Andrews, P.E.

Project: North Domingo Baca Arroyo - Tramway Blvd. to Tramway Ln.
V & A Project No. 99-2-121

Gentlemen:

Attached are copies of the Earthwork Compaction Test Results for the subject project.

Should you have any questions regarding this data, please do not hesitate to call.

Sincerely,

Vinyard & Associates, Inc.

Marcus De la Rosa

Martin D. Vinyard, P.E.

Attachment: Report Nos. 5-13

cc: Addressee: (1)
AAR-The Larkin Group - Attn: Mr. Paul Gonzales
AMAFCA - Attn: Ms. Lisa Manwill, P.E.

rsb

V
&
A

COMPACTION TEST RESULTS

PROJECT : North Domingo Baca Arroyo-Tramway Blvd. to Tramway CLIENT: AAR-The Larking Group

TECHNICIAN: Marcus de La Rosa

PROJECT NO.: 99-2-121 REPORT NO.: 5 DATE: 4-20-99

Test No.	Location	Elevation	Proctor Number	Field Moisture (%)	Field Dry Density (PCF)	Relative Compaction (%)	Specified Compaction (%)
7	Manhole backfill at 2' SE of Manhole #3	-2.0' FSG	1	6.4	129.0	98	95
8	Manhole backfill at 2' S of Manhole #1	-4.0' FSG	1	7.8	128.0	97	95

Proctor Test Utilized

Proctor No.	Sample Location	Opt. Moisture Content (%)	Maximum Dry Dens (pcf)	Soil Description
1	Sta. 12+55 S embankment of channel	8.4	131.9	Silty SAND

WEATHER: Clear & Warm

EQUIPMENT: Trackhoe, Water Truck, Tamper, Loader, Backhoe

REMARKS: Contractor notified of the test results.

V
&
A

COMPACTION TEST RESULTS

PROJECT : North Domingo Baca Arroyo-Tramway Blvd. to Tramway CLIENT: AAR-The Larking Group

TECHNICIAN: Marcus de La Rosa

PROJECT NO.: 99-2-121 REPORT NO.: 6 DATE: 4-22-99

Test No.	Location	Elevation	Proctor Number	Field Moisture (%)	Field Dry Density (PCF)	Relative Compaction (%)	Specified Compaction (%)
9	Manhole base at Sta. 10+44.03 (to storm drain)	FSG	1	6.0	128.6	97	95

Proctor Test Utilized

Proctor No.	Sample Location	Opt. Moisture Content (%)	Maximum Dry Dens (pcf)	Soil Description
1	Sta. 12+55 S embankment of channel	8.4	131.9	Silty SAND

WEATHER: Clear, breezy & warm

EQUIPMENT: Tamper, Loader, Water Truck, Trackhoe, Backhoe

REMARKS: -

V
&
A

COMPACTION TEST RESULTS

PROJECT : North Domingo Baca Arroyo-Tramway Blvd. to Tramway CLIENT: AAR-The Larking Group
TECHNICIAN: David Gay
PROJECT NO.: 99-2-121 REPORT NO.: 7 DATE: 4-27-99

Test No.	Location	Elevation	Proctor Number	Field Moisture (%)	Field Dry Density (PCF)	Relative Compaction (%)	Specified Compaction (%)
10	SE corner of CBC crossing	FSG	1	6.5	131.7	100	95
11	NW corner of CBC crossing	FSG	1	6.9	131.8	100	95
12	Natural Ground N side of arroyo Sta. 11+00	Nat. Ground	1	6.0	128.1	97.	95
13	Natural Ground N side of arroyo Sta. 9+00	Nat. Ground	1	5.8	126.5	96	95

Proctor Test Utilized

Proctor No.	Sample Location	Opt. Moisture Content (%)	Maximum Dry Dens (pcf)	Soil Description
1	Sta. 12+55 S embankment of channel	8.4	131.9	Silty SAND

WEATHER: Warm & Clear

EQUIPMENT: Loader, Roller

REMARKS: Informed contractor of the test results.

V
&
A

COMPACTION TEST RESULTS

PROJECT: North Domingo Baca Arroyo-Tramway Blvd. to Tramway CLIENT: AAR-The Larking Group

TECHNICIAN: Marcus de La Rosa

PROJECT NO.: 99-2-121 REPORT NO.: 8 DATE: 4-27-99

Test No.	Location	Elevation	Proctor Number	Field Moisture (%)	Field Dry Density (PCF)	Relative Compaction (%)	Specified Compaction (%)
14	Slope embankment on N side of channel at Sta. 11+50	-2.5' FSG	1	7.1	133.0	101	95
15	Slope embankment on N side of channel at Sta. 9+50	-3.0' FSG	1	7.4	133.1	101	95
16	Slope embankment on N side of channel of Sta. 7+50	-4.0' FSG	1	8.7	128.9	98	95

Proctor Test Utilized

Proctor No.	Sample Location	Opt. Moisture Content (%)	Maximum Dry Dens (pcf)	Soil Description
1	Sta. 12+55 S embankment of channel	8.4	131.9	Silty SAND

WEATHER: Clear & Cool

EQUIPMENT: Loader, Water Truck, Dozer

REMARKS: Contractor was notified of the test results.

V
&
A

COMPACTION TEST RESULTS

PROJECT : North Domingo Baca Arroyo-Tramway Blvd. to Tramway CLIENT: AAR-The Larking Group

TECHNICIAN: Geoffrey Juskiewicz

PROJECT NO.: 99-2-121 REPORT NO.: 9 DATE: 4-28-99

Test No.	Location	Elevation	Proctor Number	Field Moisture (%)	Field Dry Density (PCF)	Relative Compaction (%)	Specified Compaction (%)
17	North embankment 12' N of centerline Sta. 11+50	-1.5' FSG	2	7.0	135.7	100	95
18	North embankment 18' N of centerline Sta. 9+00	-1.5' FSG	2	9.1	133.8	98	95

Proctor Test Utilized

Proctor No.	Sample Location	Opt. Moisture Content (%)	Maximum Dry Dens (pcf)	Soil Description
2	Sta. 11+50 N embankment of arroyo 12' N of centerline -1.5' FSG	6.9	135.9	Silty SAND

WEATHER: Partly Cloudy

EQUIPMENT: Front loader

REMARKS: Contracting personnel notified test results were pending proctor.

V
&
A

COMPACTION TEST RESULTS

PROJECT : North Domingo Baca Arroyo-Tramway Blvd. to Tramway CLIENT: AAR-The Larking Group

TECHNICIAN: Marcus de La Rosa

PROJECT NO.: 99-2-121 REPORT NO.: 10 DATE: 4-29-99

Test No.	Location	Elevation	Proctor Number	Field Moisture (%)	Field Dry Density (PCF)	Relative Compaction (%)	Specified Compaction (%)
19	Slope embankment on S side of channel of Sta. 9+50	Nat. Ground	1	6.7	126.3	96	95
20	Slope embankment on S side of channel of Sta. 7+50	Nat. Ground	2	6.8	132.7	98	95
21	Slope embankment on N side of channel of Sta. 9+50	-1.0' FSG	2	6.6	131.1	96	95
22	Slope embankment on N side of channel of Sta. 7+50	-1.0' FSG	2	8.0	133.1	98	95

Proctor Test Utilized

Proctor No.	Sample Location	Opt. Moisture Content (%)	Maximum Dry Dens (pcf)	Soil Description
1	Sta. 12+55 S embankment of channel	8.4	131.9	Silty SAND
2	Sta. 11+50 N embankment of arroyo 12' N of centerline -1.5' FSG	6.9	135.9	Silty SAND

WEATHER: Cloudy, Windy & Hot

EQUIPMENT: Loader, Water Hose, Dozer

REMARKS: Contractor was informed of the test results.

V
&
A

COMPACTION TEST RESULTS

PROJECT : North Domingo Baca Arroyo-Tramway Blvd. to Tramway CLIENT: AAR-The Larking Group
TECHNICIAN: Jesse Carlin
PROJECT NO.: 99-2-121 REPORT NO.: 11 DATE: 4-30-99

Test No.	Location	Elevation	Proctor Number	Field Moisture (%)	Field Dry Density (PCF)	Relative Compaction (%)	Specified Compaction (%)
23	Arroyo embankment Subgrade Sta. 11+00 S slope	-1.0' FSG	2	6.5	132.0	97	95
24	Arroyo embankment Subgrade Sta. 9+00 S slope	-1.0' FSG	1	5.0	127.0	96	95
25	Arroyo embankment Subgrade Sta. 9+00 N slope	FSG	1	5.3	129.2	98	95
26	Arroyo embankment Subgrade Sta. 11+00 N slope	-2.0' FSG	1	5.6	128.0	97	95
27	SAS service backfill Sta. 16+15, 33.00 fence line	FSG	1	7.6	121.8	92	90
28	SAS service backfill Sta. 15+60, 24.00 fence line	FSG	1	5.7	120.2	91	90
29	Arroyo embankment Subgrade Sta. 10+50 N slope	FSG	2	6.4	135.1	99	95

Proctor Test Utilized

Proctor No.	Sample Location	Opt. Moisture Content (%)	Maximum Dry Dens (pcf)	Soil Description
1	Sta. 12+55 S embankment of channel	8.4	131.9	Silty SAND
2	Sta. 11+50 N embankment of arroyo 12' N of centerline -1.5' FSG	6.9	135.9	Silty SAND

WEATHER: Scattered Clouds 70 degrees

EQUIPMENT: Loader, Vibratory Roller, Backhoe

REMARKS: Contractor was informed test results pending lab results.

V
&
A

COMPACTION TEST RESULTS

PROJECT : North Domingo Baca Arroyo-Tramway Blvd. to Tramway CLIENT: AAR-The Larking Group

TECHNICIAN: Jesse Carlin

PROJECT NO.: 99-2-121 REPORT NO.: 12 DATE: 5-11-99

Test No.	Location	Elevation	Proctor Number	Field Moisture (%)	Field Dry Density (PCF)	Relative Compaction (%)	Specified Compaction (%)
30	Slab on grade cut off wall 2' S of centerline and 10' E of the box culvert	FSG	2	6.6	128.5	95	95

Proctor Test Utilized

Proctor No.	Sample Location	Opt. Moisture Content (%)	Maximum Dry Dens (pcf)	Soil Description
2	Sta. 11+50 N embankment of arroyo 12' N of centerline -1.5' FSG	6.9	135.9	Silty SAND

WEATHER: Scattered Clouds 70 degrees

EQUIPMENT: Jumping Jack

REMARKS: Contractor was informed of the test results.

V
&
A

COMPACTION TEST RESULTS

PROJECT: North Domingo Baca Arroyo-Tramway Blvd. to Tramway CLIENT: AAR-The Larking Group

TECHNICIAN: Jesse Carlin

PROJECT NO.: 99-2-121 REPORT NO.: 13 DATE: 5-14-99

Test No.	Location	Elevation	Proctor Number	Field Moisture (%)	Field Dry Density (PCF)	Relative Compaction (%)	Specified Compaction (%)
31	NW wing wall footing subgrade 20' E of the W end	FSG	2	5.0	135.8	100	95
32	NW wing wall footing subgrade 15' W of the E end	FSG	2	5.3	129.1	95	95

Proctor Test Utilized

Proctor No.	Sample Location	Opt. Moisture Content (%)	Maximum Dry Dens (pcf)	Soil Description
2	Sta. 11+50 N embankment of arroyo 12' N of centerline -1.5' FSG	6.9	135.9	Silty SAND

WEATHER: Clear 80 degrees

EQUIPMENT: 2-Jumping Jacks

REMARKS: Contractor was informed of the test results.

V

Vinyard & Associates, Inc.

8916-A Adams Street NE
Albuquerque, New Mexico 87113
505/797-9743 505/797-9749 FAX

A

Geotechnical Engineering * Materials Testing * Environmental Engineering

June 4, 1999

AAR-The Larkin Group
8500 Menaul Blvd., NE
Suite A-440
Albuquerque, NM 87112

Attn: Mr. John Andrews, P.E.

Project: North Domingo Baca Arroyo - Tramway Blvd. to Tramway Ln.
V & A Project No. 99-2-121

Gentlemen:

Attached are copies of the Earthwork Compaction Test Results for the subject project.

Should you have any questions regarding this data, please do not hesitate to call.

Sincerely,

Carl Hart

Carl Hart

Vinyard & Associates, Inc.

Martin D. Vinyard, P.E.

Attachment: Report No.'s: 14-20

cc: Addressee: (1)
AAR-The Larkin Group - Attn: Mr. Paul Gonzales
AMAFCA - Attn: Ms. Lisa Manwill, P.E.

sls

V
&
A

COMPACTION TEST RESULTS

PROJECT: North Domingo Baca Arroyo
Tramway Blvd. to Tramway Lane
CLIENT: AAR - The Larkin Group
TECHNICIAN: Jesse Carlin
PROJECT NO.: 99-2-121 REPORT NO.: 14 DATE: 5/21/99

Test No.	Location	Elevation	Proctor Number	Field Moisture (%)	Field Dry Density (PCF)	Relative Compaction (%)	Specified Compaction (%)
33	Gabion subgrade, E. side of the rundown, centerline of the channel	FSG	2	5.7	135.2	99	90

Proctor Test Utilized

Proctor No.	Sample Location	Opt. Moisture Content (%)	Maximum Dry Dens (pcf)	Soil Description
2	Sta 11+50 N. embankment of arroyo, 12' N. of centerline, -1.5' FSG	6.9	135.9	Silty SAND

WEATHER: Clear, 70's

EQUIPMENT: 1 backhoe, 1 jumping jack

REMARKS: Contractor was informed of test results.

V
&
A

COMPACTION TEST RESULTS

PROJECT: North Domingo Baca Arroyo
Tramway Blvd. to Tramway Lane
CLIENT: AAR - The Larkin Group
TECHNICIAN: Jesse Carlin
PROJECT NO.: 99-2-121 REPORT NO.: 15 DATE: 5/25/99

Test No.	Location	Elevation	Proctor Number	Field Moisture (%)	Field Dry Density (PCF)	Relative Compaction (%)	Specified Compaction (%)
34	Footing subgrade, 28' W. of the box culvert, wing wall, S. side	FSG	2	7.2	129.2	95	95
35	Footing subgrade, 4' W. of the box culvert, wing wall, S. side	FSG	2	6.7	131.8	97	95

Proctor Test Utilized

Proctor No.	Sample Location	Opt. Moisture Content (%)	Maximum Dry Dens (pcf)	Soil Description
2	Sta 11+50 N. embankment of arroyo, 12' N. of centerline. - 1.5' FSG	6.9	135.9	Silty SAND

WEATHER: Scattered clouds

EQUIPMENT: 1 jumping jack, 1 loader

REMARKS: Contractor was informed of test results.

V
&
A

COMPACTION TEST RESULTS

PROJECT: North Domingo Baca Arroyo
Tramway Blvd. to Tramway Lane
CLIENT: AAR - The Larkin Group
TECHNICIAN: Dave Gay
PROJECT NO.: 99-2-121 REPORT NO.: 16 DATE: 5/25/99

Test No.	Location	Elevation	Proctor Number	Field Moisture (%)	Field Dry Density (PCF)	Relative Compaction (%)	Specified Compaction (%)
36	NE wing wall on E. side of box culvert	FSG	2	4.9	129.3	95	95

Proctor Test Utilized

Proctor No.	Sample Location	Opt. Moisture Content (%)	Maximum Dry Dens (pcf)	Soil Description
2	Sta 11+50 N. embankment of arroyo, 12' N. of centerline, -1.5' FSG	6.9	135.9	Silty SAND

WEATHER: Windy, warm

EQUIPMENT: Backhoe, jumping jack

REMARKS: Informed contractor of results.

V
&
A

COMPACTION TEST RESULTS

PROJECT: North Domingo Baca Arroyo
Tramway Blvd. to Tramway Lane
CLIENT: AAR - The Larkin Group
TECHNICIAN: Dave Gay
PROJECT NO.: 99-2-121 REPORT NO.: 17 DATE: 5/28/99

Test No.	Location	Elevation	Proctor Number	Field Moisture (%)	Field Dry Density (PCF)	Relative Compaction (%)	Specified Compaction (%)
37	S. side of box culvert backfill	-7 1/2' FSG	1	5.8	125.6	95	95
38	S. side of box culvert backfill	-2' FSG	1	6.0	125.7	95	95

Proctor Test Utilized

Proctor No.	Sample Location	Opt. Moisture Content (%)	Maximum Dry Dens (pcf)	Soil Description
1	Sta 12+55 S. embankment of channel	8.4	131.9	Silty SAND

WEATHER: Clear, warm

EQUIPMENT: Trackhoe, loader, jumping jack roller

REMARKS: Informed contractor of results.

V
&
A

COMPACTION TEST RESULTS

PROJECT: North Domingo Baca Arroyo
Tramway Blvd. to Tramway Lane
PROJECT NO.: 99-2-121 REPORT NO.: 18

CLIENT: AAR - The Larkin Group
TECHNICIAN: Jesse Carlin
DATE: 6/1/99

Test No.	Location	Elevation	Proctor Number	Field Moisture (%)	Field Dry Density (PCF)	Relative Compaction (%)	Specified Compaction (%)
39	Wing wall backfill, Sta 13+75, N. side N. wall	-5' Top of the wall	2	6.5	132.1	97	95
40	Box culvert backfill, 10' W. of centerline, N. side of the box culvert	-4' Top of the box culvert	2	6.2	128.9	95	95

Proctor Test Utilized

Proctor No	Sample Location	Opt. Moisture Content (%)	Maximum Dry Dens (pcf)	Soil Description
2	Sta 11+50 N. embankment of arroyo, 12' N. of centerline. - 1.5' FSG	6.9	135.9	Silty SAND

WEATHER: Scattered clouds, 80's

EQUIPMENT: 1 trackhoe, 1 backhoe, 1 walkbehind

REMARKS: Contractor informed of test results.

V
&
A

COMPACTION TEST RESULTS

PROJECT : North Domingo Baca Arroyo
Tramway Blvd. to Tramway Lane
PROJECT NO.: 99-2-121 REPORT NO.: 19

CLIENT: AAR - The Larkin Group
TECHNICIAN: Carl Hart
DATE: 6/1/99

Test No.	Location	Elevation	Proctor Number	Field Moisture (%)	Field Dry Density (PCF)	Relative Compaction (%)	Specified Compaction (%)
41	Bottom of channel, Sta 8+00	FSG	1	7.5	129.1	98	95
42	Bottom of channel, Sta 9+10	FSG	1	9.2	132.0	100.	95
43	Bottom of channel, Sta 10+30	FSG	1	8.1	130.8	99	95

Proctor Test Utilized

Proctor No.	Sample Location	Opt. Moisture Content (%)	Maximum Dry Dens (pcf)	Soil Description
1	Sta 12+55 S. embankment of channel	8.4	131.9	Silty SAND

WEATHER: Partly cloudy, warm

EQUIPMENT: 1 dozer, 1 roller

REMARKS: Contractor notified of results.

V

Vinyard & Associates, Inc.

8916-A Adams Street NE
Albuquerque, New Mexico 87113
505/797-9743 505/797-9749 FAX

A

Geotechnical Engineering * Materials Testing * Environmental Engineering

July 1, 1999

AAR-The Larkin Group
8500 Menaul Blvd., NE
Suite A-440
Albuquerque, NM 87112

Attn: Mr. John Andrews, P.E.

Project: North Domingo Baca Arroyo - Tramway Blvd. to Tramway Ln.
V & A Project No. 99-2-121

Gentlemen:

Attached are copies of the Proctor Test Results for the subject project.

Should you have any questions regarding this data, please do not hesitate to call.

Sincerely,

Martin D. Vinyard, P.E.
Vinyard & Associates, Inc.

Attachment: Figure No.: 3

cc: Addressee: (1)
AAR-The Larkin Group - Attn: Mr. Paul Gonzales
AMAFCA - Attn: Ms. Lisa Manwill, P.E.

rka

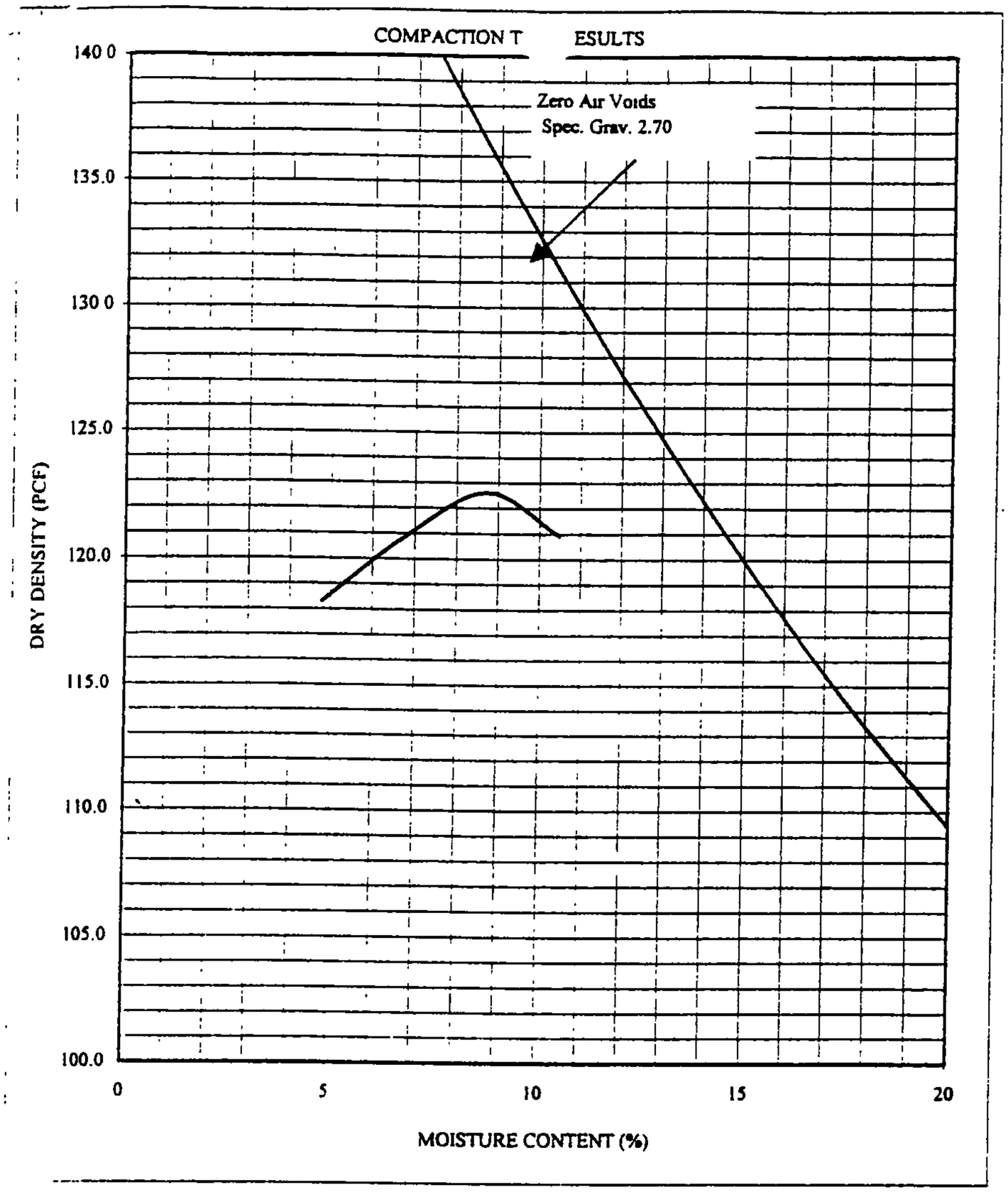

Max Dry Density= 122.7 PCF

Optimum Moist.= 8.8 %

Project Title : North Domingo Baca

VA Project No : 99-2-121 **Date Sampled :** 6/28/99 **Sample No. :** 99-1666

Sample Location : Stockpile of material for road over channel.

Soil Description : Well graded SAND with silt and gravel.

Unified Soil Classification : (SW-SM) g **AASHTO CLASSIFICATION:** A-1-a

Test Method : ASTM D1557 C **Specification Used :**

Atterberg Limits: LL NV **PI** NP **EST. R-VALUE :** 70

SIEVE ANALYSIS-% PASSING											
1	3/4	1/2	3/8	No. 4	No. 8	No. 16	No. 30	No. 50	No. 100	No. 200
100	97	84	76	55	42	33	26	17	10	4.8
SPECIFICATIONS										

Figure: 3

V

Vinyard & Associates, Inc.

8916-A Adams Street NE
Albuquerque, New Mexico 87113
505/797-9743 505/797-9749 FAX

A

Geotechnical Engineering * Materials Testing * Environmental Engineering

July 6, 1999

AAR-The Larkin Group
8500 Menaul Blvd., NE
Suite A-440
Albuquerque, NM 87112

Attn: Mr. John Andrews, P.E.

Project: North Domingo Baca Arroyo - Tramway Blvd. to Tramway Ln.
V & A Project No. 99-2-121

Gentlemen:

Attached are copies of the Earthwork Compaction Test Results for the subject project.

Should you have any questions regarding this data, please do not hesitate to call.

Sincerely,

Frank Avalos

Vinyard & Associates, Inc.

Martin D. Vinyard, P.E.

Attachment: Report No.'s 21 - 25

cc: Addressee: (1)
AAR-The Larkin Group - Attn: Mr. Paul Gonzales
AMAFCA - Attn: Ms. Lisa Manwill, P.E.

kdv

V
&
A

COMPACTION TEST RESULTS

PROJECT : North Domingo Baca Arroyo — CLIENT: AAR-The Larkin Group
Tramway Blvd. to Tramway Lane — TECHNICIAN: Frank Avalos
PROJECT NO.: 99-2-121 — REPORT NO.. 21 — DATE: 6/8/99
COA PROJECT NO.: -

Test No.	Location	Elevation	Proctor Number	Field Moisture (%)	Field Dry Density (PCF)	Relative Compaction (%)	Specified Compaction (%)
46	Centerline of channel, Sta. 10+60	FSG	2	8.0	130.1	96	95
47	N slope of channel, Sta. 10+60	FSG	2	8.0	129.8	96	95
48	Centerline, center of channel, Sta. 11+70	FSG	2	7.5	131.7	97	95
49	S slope, slope of channel. Sta. 11+70	FSG	2	8.0	132.2	97	95

Proctor Test Utilized

Proctor No	Sample Location	Opt. Moisture Content (%)	Maximum Dry Dens (pcf)	Soil Description
2	Sta. 11+50 N embankment of arroyo. 12' N of centerline. -1.5' FSG	6.9	135.9	Silty SAND

WEATHER: Partly cloudy, 70 degrees
EQUIPMENT. Water truck. roller
REMARKS: -

V
&
A

COMPACTION TEST RESULTS

PROJECT: North Domingo Baca Arroyo — CLIENT: AAR-The Larkin Group
Tramway Blvd. to Tramway Lane — TECHNICIAN: Frank Avalos
PROJECT NO.: 99-2-121 — REPORT NO.: 22 — DATE: 6/10/99
COA PROJECT NO.: -

Test No.	Location	Elevation	Proctor Number	Field Moisture (%)	Field Dry Density (PCF)	Relative Compaction (%)	Specified Compaction (%)
50	S slope of channel, Sta. 13+50	FSG	2	7.0	131.3	97	95
51	S slope of channel, Sta. 13+50	FSG	2	7.5	132.5	97	95

Proctor Test Utilized

Proctor No	Sample Location	Opt Moisture Content (%)	Maximum Dry Dens (pcf)	Soil Description
2	Sta. 11+50 N embankment of arroyo, 12' N of centerline, -1.5' FSG	6.9	135.9	Silty SAND

WEATHER: 60 degrees, clear and sunny

EQUIPMENT: water truck, roller

REMARKS: Contracting personnel informed of the test results.

V
&
A

COMPACTION TEST RESULTS

PROJECT: North Domingo Baca Arroyo — CLIENT: AAR-The Larkin Group
Tramway Blvd. to Tramway Lane — TECHNICIAN: Matthew Juskiewicz
PROJECT NO.: 99-2-121 — REPORT NO.: 23 — DATE: 6/26/99
COA PROJECT NO.: -

Test No.	Location	Elevation	Proctor Number	Field Moisture (%)	Field Dry Density (PCF)	Relative Compaction (%)	Specified Compaction (%)
52	S bound Tramway Lane, 80' N of box culvert	FSG	2	4.5	129.9	96	95
53	S bound Tramway Lane, 80' N of box culvert	FSG	2	6.5	136.0	100	95

Proctor Test Utilized

Proctor No	Sample Location	Opt. Moisture Content (%)	Maximum Dry Dens (pcf)	Soil Description
2	Sta. 11+50 N embankment of arroyo. 12' N of centerline. -1.5' FSG	6.9	135.9	Silty SAND

WEATHER: Partly cloudy, winds were calm. 85 degrees

EQUIPMENT: Loader, blade, roller, water truck

REMARKS: Contracting personnel informed of the test results.

V
&
A

COMPACTION TEST RESULTS

PROJECT: North Domingo Baca Arroyo — CLIENT: AAR-The Larkin Group
Tramway Blvd. to Tramway Lane — TECHNICIAN: Frank Avalos
PROJECT NO.: 99-2-121 — REPORT NO.: 24 — DATE: 6/28/99
COA PROJECT NO.: -

Test No.	Location	Elevation	Proctor Number	Field Moisture (%)	Field Dry Density (PCF)	Relative Compaction (%)	Specified Compaction (%)
54	Top of culvert	FSG	1	8.0	127.2	96	95
55	Maintenance road, Sta. 7+73	FSG	1	7.5	128.4	97	95
56	Maintenance road, Sta. 9+20	FSG	1	8.0	126.8	96	95
57	Maintenance road, Sta. 10+50	FSG	1	8.2	127.8	97	95
58	Maintenance road. Sta. 12+00	FSG	1	7.9	128.0	97	95
59	Maintenance road. Sta. 13+25	FSG	1	7.6	127.4	97	95

Proctor Test Utilized

Proctor No	Sample Location	Opt Moisture Content (%)	Maximum Dry Dens (pcf)	Soil Description
1	Sta. 12+55 S embankment of channel	8.4	131.9	Silty SAND

WEATHER: 60 degrees, clear and sunny

EQUIPMENT: Pneumatic roller, water truck

REMARKS: Contracting personnel informed of the test results.

V
&
A

COMPACTION TEST RESULTS

PROJECT: North Domingo Baca Arroyo
Tramway Blvd. to Tramway Lane
CLIENT: AAR-The Larkin Group
TECHNICIAN: Frank Avalos
PROJECT NO.: 99-2-121 REPORT NO.: 25 DATE: 6/29/99
COA PROJECT NO.: -

Test No.	Location	Elevation	Proctor Number	Field Moisture (%)	Field Dry Density (PCF)	Relative Compaction (%)	Specified Compaction (%)
60	Top of culvert, Sta. 11+94	BC	1	7.4	128.6	97	95
61	Top of culvert, Sta. 12+75	BC	1	4.8	128.1	97	95

Proctor Test Utilized

Proctor No	Sample Location	Opt. Moisture Content (%)	Maximum Dry Dens (pcf)	Soil Description
1	Sta. 12+55 S embankment of channel	8.4	131.9	Silty SAND

WEATHER: 65 degrees, clear and sunny

EQUIPMENT: Pneumatic roller, blade, water truck

REMARKS: Contracting personnel informed of the test results.

Form 6

FEDERAL EMERGENCY MANAGEMENT AGENCY **CHANNELIZATION**	O.M.B. Burden No. 3067-0148 Expires April 30, 2001

PUBLIC BURDEN DISCLOSURE NOTICE

Public reporting burden for this form is estimated to average 1.75 hours per response. The burden estimate includes the time for reviewing instructions, searching existing data sources, gathering and maintaining the needed data, and completing and reviewing the form. Send comments regarding the accuracy of the burden estimate and any suggestions for reducing this burden to: Information Collections Management, Federal Emergency Management Agency, 500 C Street, S.W., Washington, DC 20472; and to the Office of Management and Budget, Paperwork Reduction Project (3067-0148), Washington, DC 20503.

You are not required to respond to this collection of information unless a valid OMB Control Number is displayed in the upper right corner of this form.

Community Name: CITY OF ALBUQUERQUE, BERNALILLO COUNTY, NEW MEXICO

Flooding Source: NORTH ARROYO DE DOMINGO BACA (NORTH DOMINGO BACA ARROYO)

Project Name/Identifier: NORTH DOMINGO BACA ARROYO - TRAMWAY BLVD. TO TRAMWAY LANE

1. REACH TO BE REVISED

Describe the limits of the revision **OR** submit a copy of the FIRM with the revision area clearly highlighted.
Copy of FIRM(s) attached depicting area of the revision (highlighted, or circled)? ☐ Yes

Downstream Limit: APPROXIMATELY 325 FEET DOWNSTREAM OF TRAMWAY BOULEVARD

Upstream Limit: APPROXIMATELY 250 FEET UPSTREAM OF TRAMWAY LANE

2. CHANNEL DESCRIPTION

Attach the following information about the channel (check box if information has been provided):

☒ Description of the inlet and outlet

☒ Description of the shape of the channel *(both cross sectional and planimetric configuration)* and its lining *(channel bottom and sides)*:

3. ACCESSORY STRUCTURES

The channelization includes:

☐ Levees *(Attach Levee/Floodwall System Analysis Form - Form 8)*
☒ Drop structures
☐ Superelevated sections
☒ Transitions in cross sectional geometry
☐ Debris basin/detention basin
☐ Energy dissipater
☐ Other (Describe):

4. DRAWING CHECKLIST

Attach the plans of the channelization certified by a registered professional engineer. The plan detail and information should include (check box if information has been provided):

☒ Channel alignment and locations of inlet, outlet, and accessory structures

☒ Channel lining

☒ Typical cross sections and profiles of channel banks and invert

PLEASE REFER TO THE INSTRUCTIONS FOR THE APPROPRIATE MAILING ADDRESS

5. HYDRAULIC CONSIDERATIONS

1. The channel was designed to carry 1262 (cfs) and/or the 100 -year flood.

2. The design elevation in the channel based on:

   ☐ Subcritical flow

   ☒ Critical flow (STATION 14+73 TO 16+51)

   ☒ Supercritical flow (STATION 2+00 TO 14+73)

   ☐ Energy grade line

3. **If there is the potential for a hydraulic jump at the following locations, check the box(es) that apply and attach an explanation of how the hydraulic jump is controlled without affecting the stability of the channel.**

Inlet to channel?	☐ Yes	☒ No
Outlet of channel?	☐ Yes	☒ No
At Drop Structures?	☐ Yes	☒ No
At Transitions?	☐ Yes	☒ No
Other locations?	☐ Yes	☒ No

Explanation Attached? ☐ **Yes** ☐ **No** ☒ **N/A**

6. SEDIMENT TRANSPORT CONSIDERATIONS

If there is any indication from historical records that sediment transport (including scour and deposition) can affect the 100-year (base flood) water-surface elevations; and/or based on the stream geomorphology, vegetative cover, development of the watershed and bank conditions, there is a potential for debris and sediment transport (including sewer and deposition) to affect the base flood water-surface elevations, then provide the following information **(Check the box if provided):**

☒ Estimated sediment load

☒ Method used to estimate sediment transport

☒ Method used to estimate scour and/or deposition

☒ Method used to revise hydraulic or hydrologic analysis (model) to account for sediment transport

FORM 6 – ADDITIONAL INFORMATION AND EXPLANATION

2. Channel Description:

Approximately 200 feet upstream of Tramway Lane the natural arroyo meets the proposed gabion wing wall inlet structure. The gabion wing walls are vertical and funnel flow from an initial width of 76 feet at station16+51 to a width of 45 feet at the drop structure at station 14+73. At the drop structure, the slope of the shotcrete channel is 33%. Flow passes through 3-6'x10' concrete box culverts from station 14+53 to 13+39. An approximately 100-foot length of shotcrete channel transitions the flow from a rectangular section (box culverts) to a trapezoidal section. The shotcrete channel (from station 12+93 to 6+85) has a 10-foot bottom width and 2:1 side slopes. The freeboard is composed of grouted riprap. The channel averages about 6 feet deep. From the shotcrete channel the flow is conveyed under Tramway Blvd. in an existing concrete box culvert. From station 6+85 to 2+00 an existing concrete channel conveys the flow to Tennyson Street. This channel averages about 5.5 feet deep. The entire study reach (station 16+51 to 2+00) maintains a linear alignment (with only very slight curves). See the "Engineer's Design Analysis Report" included with the CLOMR dated August 1995.

4. Drawing Checklist:

The "As-Built" plans certified by a registered professional engineer, including the alignment and profile of the shotcrete channel, gabion inlet, and Tramway Lane box culvert are included with this form.

6. Sediment Transport Considerations:

All of the requested information is included in the "Engineer's Design Analysis Report" which was submitted with the CLOMR dated August 1995.

Albuquerque
Metropolitan
Arroyo
Flood
Control
Authority

ALBUQUERQUE METROPOLITAN ARROYO FLOOD CONTROL AUTHORITY

IN CONJUNCTION WITH

COUNTY OF BERNALILLO DEPARTMENT OF PUBLIC WORKS

NORTH DOMINGO BACA ARROYO

TRAMWAY BOULEVARD NE. TO TRAMWAY LANE NE.

ANDREWS, ASBURY & ROBERT, INC.

CONSULTING ENGINEERS

ALBUQUERQUE NEW MEXICO

RECORD DRAWING 10/99

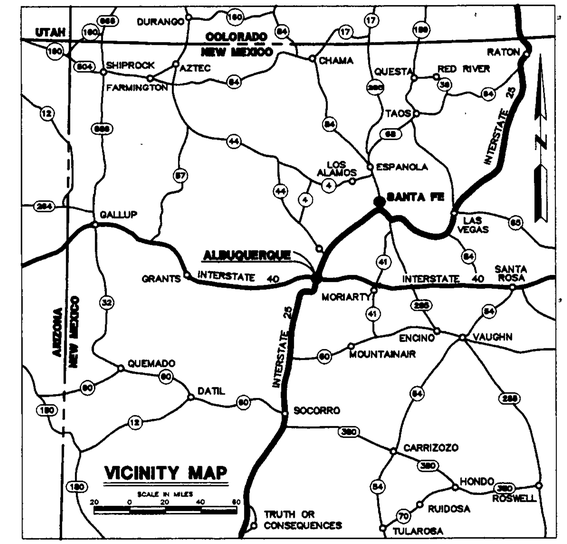

VICINITY MAP

INDEX

DESCRIPTION	SHEET NO.
TITLE SHEET, INDEX, & VICINITY MAP	1
LOCATION MAP & GENERAL NOTES	2
PLAN & PROFILE - NORTH DOMINGO BACA ARROYO STA. 5+00 TO 9+40	3
PLAN & PROFILE - NORTH DOMINGO BACA ARROYO STA. 9+40 TO 14+40	4
PLAN & PROFILE - NORTH DOMINGO BACA ARROYO STA. 14+40 TO 17+00	5
TRAMWAY LANE CROSSING	6
CHANNEL DETAILS	7
MISCELLANEOUS DETAILS	8
PIPE PENETRATION DETAILS	9
GABION DETAILS	10
FENCE & GATE DETAILS	11
PAVING PLAN & PROFILE - TRAMWAY LANE	12
SANITARY SEWER PLAN & PROFILE STA. 7+00 TO 13+00	13
SANITARY SEWER PLAN & PROFILE STA. 13+00 TO 17+00	14
CONCRETE BOX CULVERT - GENERAL DATA TRIPLE OPENING - NORMAL	15
CONCRETE BOX CULVERT - DESIGN NO 1. TRIPLE OPENING - NORMAL	16
CUT-OFF WALL DETAILS (ADDED SHEET)	5A

APPROVED FOR CONSTRUCTION:

FRANK H. MARTINEZ
EXECUTIVE DIRECTOR, AMAFCA/OWNER

RECOMMENDED:

JOHN KELLY P.E. 2/10/99
CHIEF ENGINEER, AMAFCA

REGISTERED PROFESSIONAL ENGINEER STATE OF NEW MEXICO No. 3960 JOHN A. ANDREWS
2-3-99

2/8/99
APPROVED FOR CONSTRUCTION
BERNALILLO COUNTY PUBLIC WORKS DEPARTMENT

ENGINEER'S FILE No 94-688

SET No. _____

GENERAL NOTES

1. ALL WORK DETAILED ON THESE PLANS TO BE PERFORMED UNDER THIS CONTRACT SHALL, EXCEPT AS OTHERWISE STATED OR PROVIDED FOR HEREON, BE CONSTRUCTED IN ACCORDANCE WITH NEW MEXICO STATE HIGHWAY AND TRANSPORTATION DEPARTMENT "STANDARD SPECIFICATIONS FOR ROAD AND BRIDGE CONSTRUCTION EDITION 1994".
2. REFERENCES MADE TO STANDARD DRAWINGS REFER TO NEW MEXICO STATE HIGHWAY AND TRANSPORTATION DEPARTMENT DRAWINGS OR CITY OF ALBUQUERQUE AS DESIGNATED.
3. TWO WORKING DAYS PRIOR TO ANY EXCAVATION, CONTRACTOR MUST CONTACT LINE LOCATING SERVICE, 260-1990, FOR LOCATION OF EXISTING UTILITIES.
4. PRIOR TO CONSTRUCTION, THE CONTRACTOR SHALL EXCAVATE AND VERIFY THE HORIZONTAL AND VERTICAL LOCATIONS OF ALL OBSTRUCTIONS. SHOULD A CONFLICT EXIST, THE CONTRACTOR WILL NOTIFY THE PROJECT MANAGER OR SURVEYOR SO THAT THE CONFLICT CAN BE RESOLVED WITH A MINIMUM AMOUNT OF DELAY.
5. ALL UTILITIES AND UTILITY SERVICE LINES SHALL BE INSTALLED PRIOR TO PAVING.
6. BACKFILL COMPACTION SHALL BE ACCORDING TO SPECIFIED STREET USE.
7. TACK COAT REQUIREMENTS SHALL BE DETERMINED BY ENGINEER.
8. CONTRACTOR SHALL PROVIDE 12" SUBGRADE PREPARATION UNDER ALL NEW PAVEMENT AND CHANNEL LINING.
9. WHEN ABUTTING NEW PAVEMENT TO EXISTING, CUT BACK EXISTING PAVEMENT TO A NEAT STRAIGHT LINE AS REQUIRED TO REMOVE ANY BROKEN OR CRACKED PAVEMENT, AND MATCH NEW TO EXISTING. NO SEPARATE PAYMENT SHALL BE MADE FOR SUCH CUTTING OF EXISTING PAVEMENT CUT SHALL BE CONSIDERED INCIDENTAL TO THE PROJECT. CUTTING OF PAVEMENT SHALL BE IN CONFORMANCE WITH THE SPECIFICATIONS.
10. WHEN ROAD PAVEMENT CONSTRUCTION UNDER THIS PROJECT CONNECTS TO EXISTING IMPROVEMENTS, THE CONTRACTOR SHALL PROVIDE AN EASY RIDING CONNECTION.
11. ALL WATER VALVE BOXES AND SEWER MANHOLES IN THE CONSTRUCTION AREA ARE TO BE ADJUSTED TO FINISH GRADE UNDER THE CONTRACT.
12. CONTRACTOR SHALL REMOVE AND DISPOSE OF ALL OBJECTIONABLE MATERIAL FROM THE CONSTRUCTION SITE. A DISPOSAL SITE FOR ALL REMOVAL ITEMS SHALL BE OBTAINED BY THE CONTRACTOR. THE SITE SHALL BE IN COMPLIANCE WITH APPLICABLE ENVIRONMENTAL REGULATIONS AND APPROVED BY AMAFCA AND THE COUNTY OF BERNALILLO PUBLIC WORKS DEPARTMENT. ALL COSTS INCURRED IN OBTAINING AN ACCEPTABLE SITE AND HAUL THERETO SHALL BE CONSIDERED INCIDENTAL TO CONSTRUCTION OF THE PROJECT.
13. ALL PERMANENT PAVEMENT MARKING AND TRAFFIC SIGNING WILL BE PERFORMED BY THE COUNTY OF BERNALILLO PUBLIC WORKS DEPARTMENT. CONTRACTOR SHALL BE RESPONSIBLE FOR COORDINATION WITH COUNTY.
14. CONSTRUCTION SIGNING:

    A. ALL BARRICADES AND SIGNING SHALL CONFORM TO APPLICABLE SECTIONS OF THE "MANUAL ON UNIFORM TRAFFIC CONTROL DEVICES" (MUTCD), U.S. DEPARTMENT OF TRANSPORTATION, MOST RECENT EDITION.

    B. CONTRACTOR SHALL PREPARE A CONSTRUCTION SIGNING PLAN AND OBTAIN APPROVAL OF SUCH A PLAN FROM THE COUNTY OF BERNALILLO, PUBLIC WORKS DEPARTMENT, PRIOR TO BEGINNING ANY CONSTRUCTION WORK ON OR ADJACENT TO EXISTING STREETS. - SEE NOTE BELOW.

    C. ALL CONSTRUCTION WARNING SIGNS SHALL HAVE A MOUNTED HEIGHT OF SEVEN (7) FEET.

    D. CONTRACTOR SHALL MAINTAIN ALL BARRICADES AND SIGNING AT ALL TIMES. THE CONTRACTOR SHALL VERIFY THE PROPER LOCATION OF ALL BARRICADES AT THE END AND BEGINNING OF EACH DAY.
15. REINFORCED CONCRETE STRUCTURES SHALL HAVE REINFORCING STEEL CONTINUOUS AT ALL CORNERS.
16. DOWELS SHALL BE PROVIDED AT ALL CONNECTIONS OF REINFORCED CONCRETE CONSTRUCTION.
17. ALL EXPOSED CONCRETE BOX CULVERT AND RETAINING WALL SURFACES, TO A MINIMUM OF 6 INCHES BELOW FINISHED GRADE, SHALL BE FINISHED WITH "THOROCOAT", AS PER NEW MEXICO STATE HIGHWAY AND TRANSPORTATION DEPARTMENT "STANDARD SPECIFICATIONS FOR ROAD AND BRIDGE CONSTRUCTION," SECTION 511.383. MORTAR WITH THOROCOAT SHALL BE TINTED "FLAGSTONE BROWN" AT 3 LBS. PER SACK OF CEMENTITIOUS MATERIAL. TO MATCH THE COLOR OF THE SHOTCRETE CHANNEL.
18. ALL DISTURBED AREAS SHALL BE RESEEDED WITH NATIVE VEGETATION ACCORDING TO AMAFCA STANDARDS. - SEE SPECIFICATIONS
19. ALL EXISTING BOULDERS ON THE PROJECT SITE SHALL BE REMOVED, HAULED AND STOCKPILED AT THE SOUTH DOMINGO BACA DAM. BOULDERS TO BE PLACED ON THE 2:1 SLOPE ADJACENT TO THE CHANNEL LINING, INCLUDING THE "GROUTED BOULDERS" SHALL BE SELECTED FORM THE 3'± DIA. BOULDERS THAT ARE PRESENTLY LOCATED AROUND THE PERIMETER OF THE SOUTH DOMINGO BACA DAM RIGHT-OF-WAY.

    BOULDERS TO BE PLACED ABOVE THE 2:1 SLOPE ON THE NORTH SIDE OF THE CHANNEL MAY BE SELECTED FROM THE 2'± DIA. BOULDERS REMOVED FROM THE EXISTING CHANNEL. - SEE CHANNEL SECTIONS ON SHEET 7.
20. PROJECT SIGNAGE TO IDENTIFY AMAFCA AND BERNALILLO COUNTY AS A SOURCE OF FUNDING FOR THE PROJECT. - SEE CONTRACT DOCUMENTS

TRAFFIC CONTROL GENERAL NOTES

1. PROJECT IS SUBJECT TO THE REQUIREMENTS OF COUNTY ORDINANCE NO. 95-12 AND ORDINANCE NO, 96-3. THE CONTRACTOR IS RESPONSIBLE FOR ACQUIRING ALL PERMITS NECESSARY. CONTRACTOR SHALL CALL 848-1500 FOR MORE INFORMATION.
2. THE CONTRACTOR SHALL SUBMIT A TRAFFIC CONTROL PLAN TO THE COUNTY TRAFFIC CONTROL MANAGER AT LEAST 72 HOURS PRIOR TO COMMENCEMENT OF WORK. TRAFFIC CONTROL PLANS SHALL BE PREPARED IN ACCORDANCE WITH MUTCD REQUIREMENTS AND BY CERTIFIED PERSONNEL AND MUST BE APPROVED PRIOR TO COMMENCEMENT OF WORK ON THE PROJECT. CALL 848-1504 FOR FURTHER INFORMATION.
3. A DAILY TRAFFIC CONTROL LOG SHALL BE MAINTAINED BY THE CONTRACTOR REFLECTING THE TYPES AND LOCATIONS OF ALL TRAFFIC CONTROL DEVICES, SIGNS, BARRICADES, ETC. BEING USED ON THE PROJECT IN COMPLIANCE WITH THE APPROVED TRAFFIC CONTROL PLAN. THIS LOG SHALL BE SUBMITTED TO THE BERNALILLO COUNTY TRAFFIC CONTROL MANAGER UPON COMPLETION OF THE PROJECT CONSTRUCTION OR WHEN SO REQUESTED BY THE PROJECT OR THE BERNALILLO COUNTY TRAFFIC CONTROL MANAGER.
4. CONTRACTOR SHALL PROVIDE A WEEKLY CONSTRUCTION ACTIVITY SCHEDULE TO BERNALILLO COUNTY PUBLIC WORKS DEPARTMENT, ATTN.: HOSS FOSTER.
5. THE CONTRACTOR SHALL FILE WEEKLY WRITTEN REPORT TO THE TRAFFIC CONTROL MANAGER DESCRIBING THE TRAFFIC CONTROL PLAN THAT WILL BE IN EFFECT THE FOLLOWING WEEK.
6. CONTRACTOR SHALL PROVIDE PROPER SIGNAGE AND FLAGMAN TO ASSURE PROPER SAFETY TO THE TRAVELING PUBLIC ON ALL AFFECTED ROADS. THE CONTRACTOR SHALL PROVIDE ACCESS TO ALL PRIVATE AND PUBLIC PROPERTY AT ALL TIMES, EXCEPT WHEN GRADING, EXCAVATION AND BACKFILL OPERATIONS ARE BEING CONDUCTED IMMEDIATELY IN FRONT OF THE PROPERTY, IN WHICH CASE ACCESS WILL NOT BE DENIED FOR MORE THAN 4 HOURS WITHOUT APPROVAL BY THE COUNTY.
7. TRAFFIC LANES PROVIDED DURING CONSTRUCTION SHALL, BE MAINTAINED, IN SUCH A CONDITION UNDER ALL WEATHER CONDITIONS, SO AS TO PERMIT THE REASONABLE PASSAGE OF PASSENGER VEHICLES, AND SHALL BE KEPT GRADED AND SMOOTH, AND WATERED SEVERAL TIMES DAILY TO CONTROL DUST.
8. TCP MAY INCLUDE COMPLETE ROAD CLOSRURE OF TRAMWAY LANE NE AT ARROYO CROSSING.

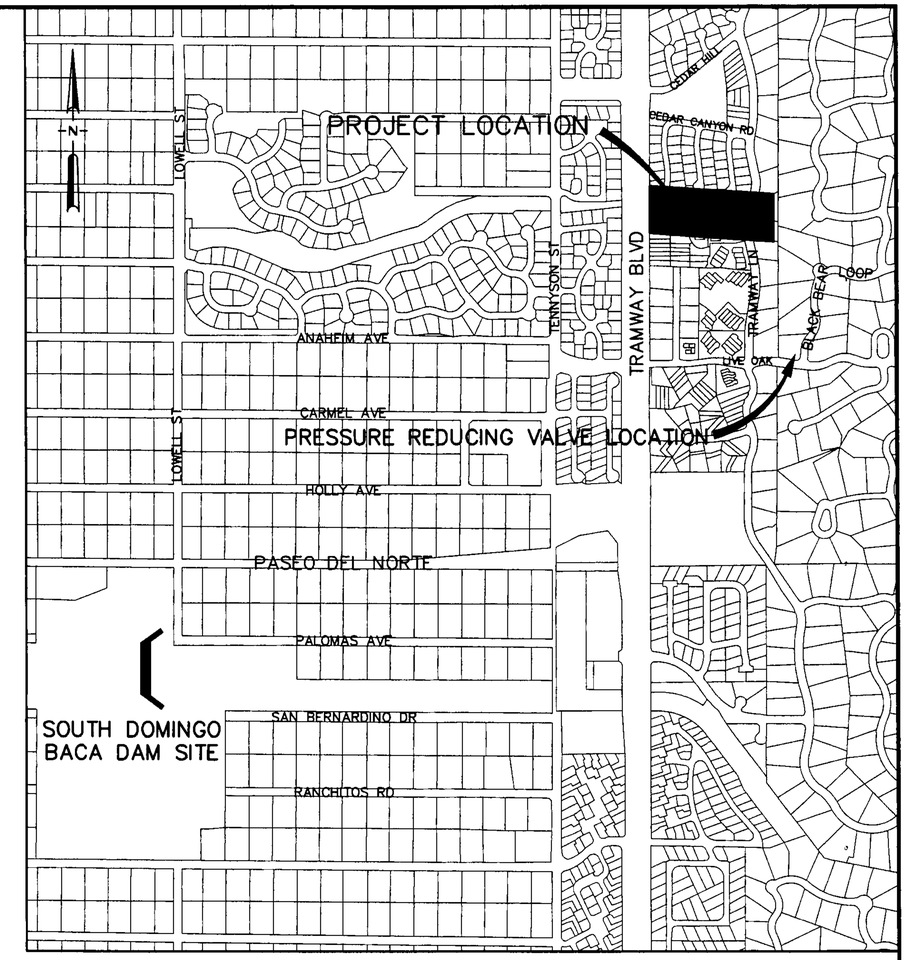

PROJECT LOCATION MAP

SCALE: 1" = 500'
ZONE ATLAS MAP C-23

UTILITY CONTACTS

PNM ELECTRIC SERVICES	MR. BOB SANCHEZ	241-3429
PNM GAS SERVICES	MR. TIM CYNOVA	241-7775
SANDIA PEAK UTILITY CO.	MR. GABE SEDILLO	856-6345

REGISTERED PROFESSIONAL ENGINEER STATE OF NEW MEXICO JOHN A. ANDREWS

RECORD DRAWING 10/99

ALBUQUERQUE METROPOLITAN ARROYO FLOOD CONTROL AUTHORITY AND BERNALILLO COUNTY OF PUBLIC WORKS

NORTH DOMINGO BACA ARROYO

TRAMWAY BOULEVARD TO TRAMWAY LANE

LOCATION MAP AND GENERAL NOTES

ANDREWS, ASBURY & ROBERT, INC.
ALBUQUERQUE — CONSULTING ENGINEERS — NEW MEXICO

FILE No.	DRAWN	CHECKED	DATE	SHEET
94-688	ACE	PJG, JA	JAN. 1999	2 OF 16

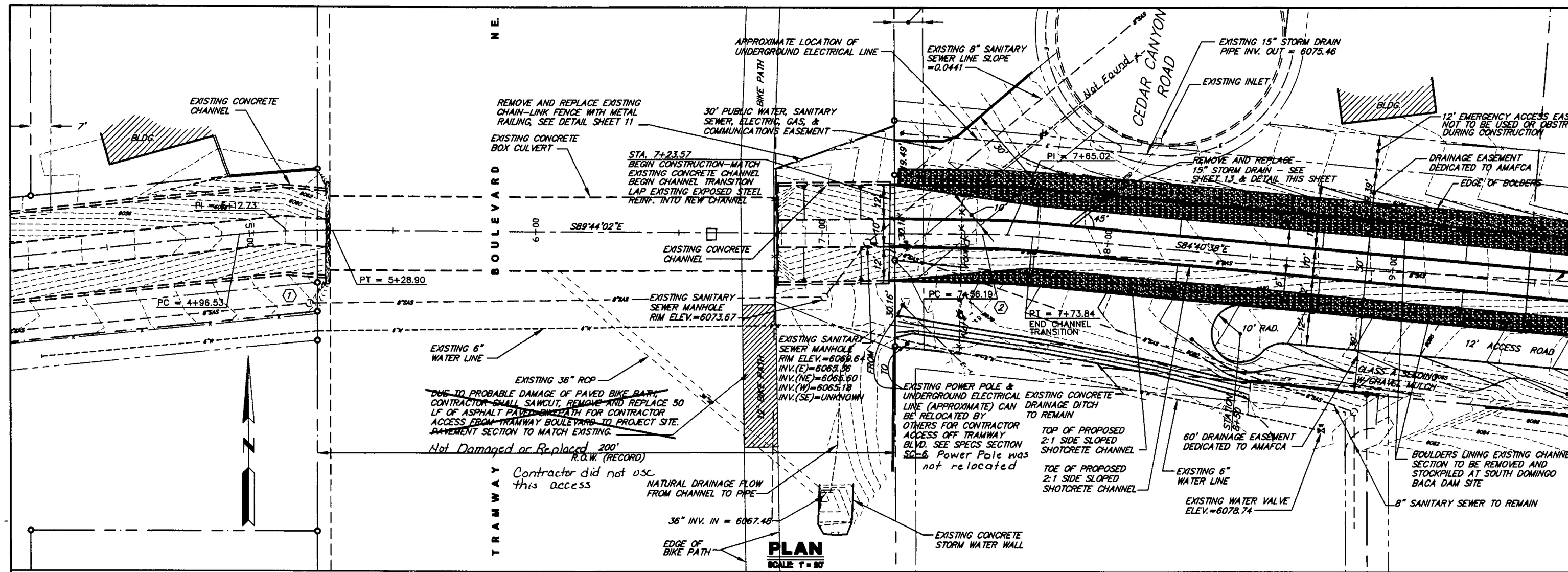

NORTH DOMINGO BACA ARROYO

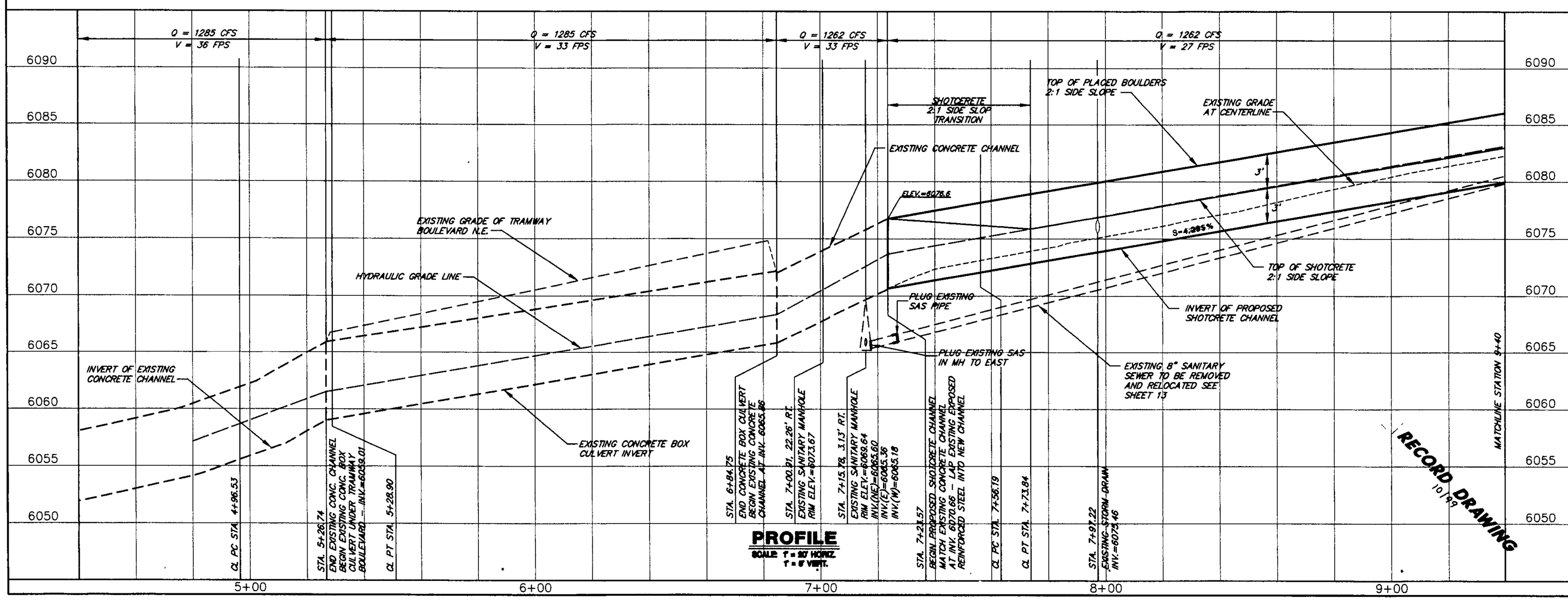

CURVE DATA

① EXISTING CL CURVE DATA	② CL CURVE DATA
Δ = 06°10'56"	Δ = 05°03'24"
R = 300.00'	R = 200.00'
T = 16.20'	T = 8.83'
L = 32.37'	L = 17.65'

CONCRETE COLLAR DETAIL

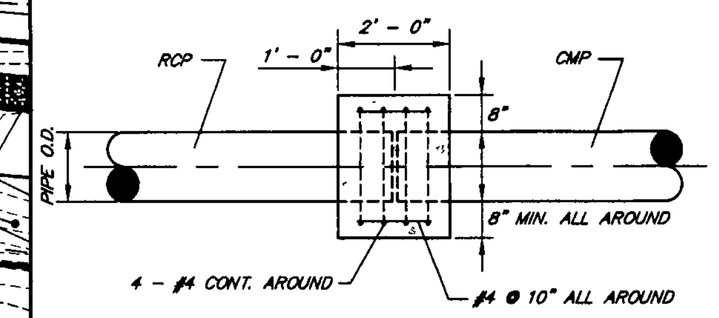

SCALE: 1/2" = 1' - 0"

NOTE:

CONTRACTOR TO SUBMIT TRAFFIC CONTROL PLAN FOR APPROVAL TO BERNALILLO COUNTY FOR ANY USE OF PUBLIC RIGHT-OF-WAY DURING CONSTRUCTION.

LEGEND

- EXISTING PROPERTY LINE
- EXISTING EASEMENT LINE
- EXISTING 1' CONTOUR
- EXISTING 5' CONTOUR
- PROPOSED 1' CONTOUR
- PROPOSED 5' CONTOUR
- EXISTING EDGE OF PAVEMENT
- PROPOSED EDGE OF PAVEMENT
- EXISTING SANITARY SEWER LINE WITH MANHOLE
- PROPOSED SANITARY SEWER LINE WITH MANHOLE
- EXISTING WATER LINE WITH WATER VALVE
- PROPOSED WATER LINE WITH WATER VALVE
- EXISTING STORM DRAIN
- PROPOSED STORM DRAIN
- PROPOSED CHANNEL CENTERLINE
- EXISTING CONCRETE CHANNEL
- PROPOSED SHOTCRETE CHANNEL
- EXISTING UNDERGROUND ELECTRICAL LINE
- EXISTING GAS LINE
- EXISTING POWER POLE
- PROPOSED GABION DIKE
- EXISTING BUILDING
- PROPOSED PLACED BOULDERS
- HYDRAULIC GRADE LINE
- PROPOSED BOLDERS
- LIMITS OF PAVEMENT REMOVAL

REGISTERED PROFESSIONAL ENGINEER STATE OF NEW MEXICO No. 3960 JOHN A. ANDREWS

ALBUQUERQUE METROPOLITAN ARROYO FLOOD CONTROL AUTHORITY AND BERNALILLO COUNTY PUBLIC WORKS

NORTH DOMINGO BACA ARROYO

TRAMWAY BOULEVARD NE. TO TRAMWAY LANE NE.

PLAN & PROFILE STA. 5+00 TO 9+40

ANDREWS, ASBURY & ROBERT, INC.
CONSULTING ENGINEERS
ALBUQUERQUE NEW MEXICO

FILE No	DRAWN	CHECKED	DATE	SHEET	OF
94-688	ACE	PJG, JA	JAN. 1999	3	16

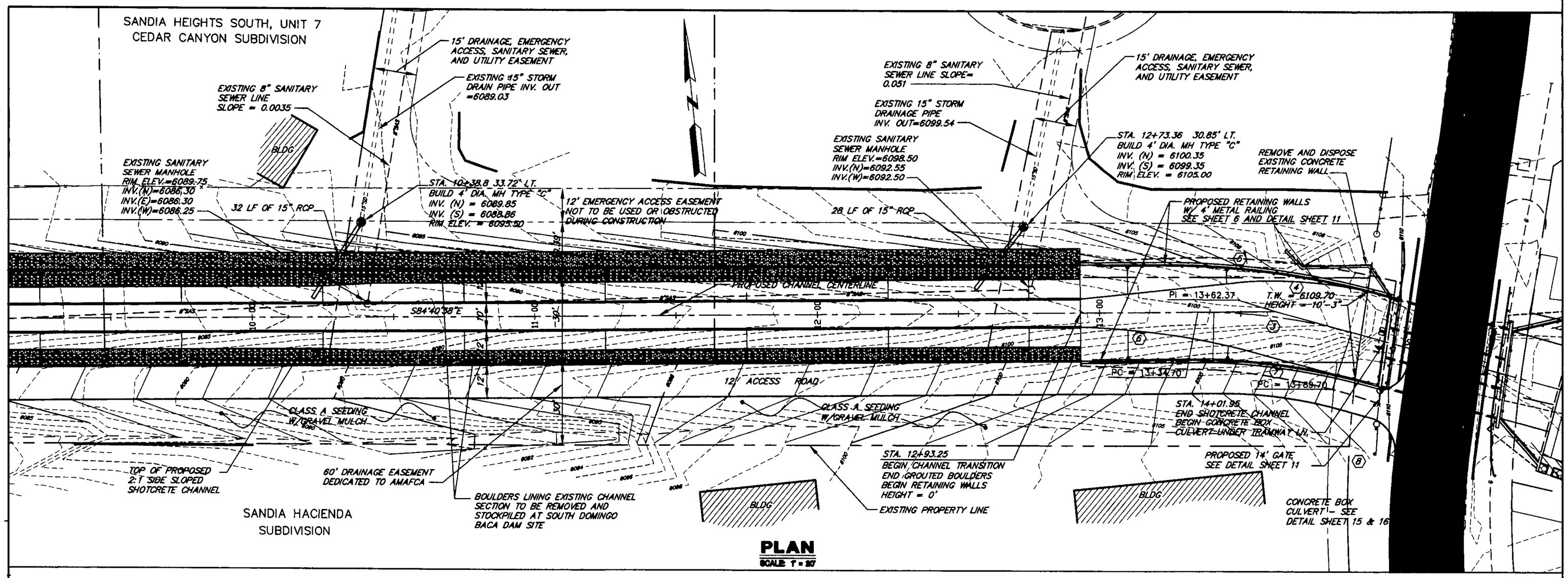

PLAN
SCALE: 1" = 20'

NORTH DOMINGO BACA ARROYO

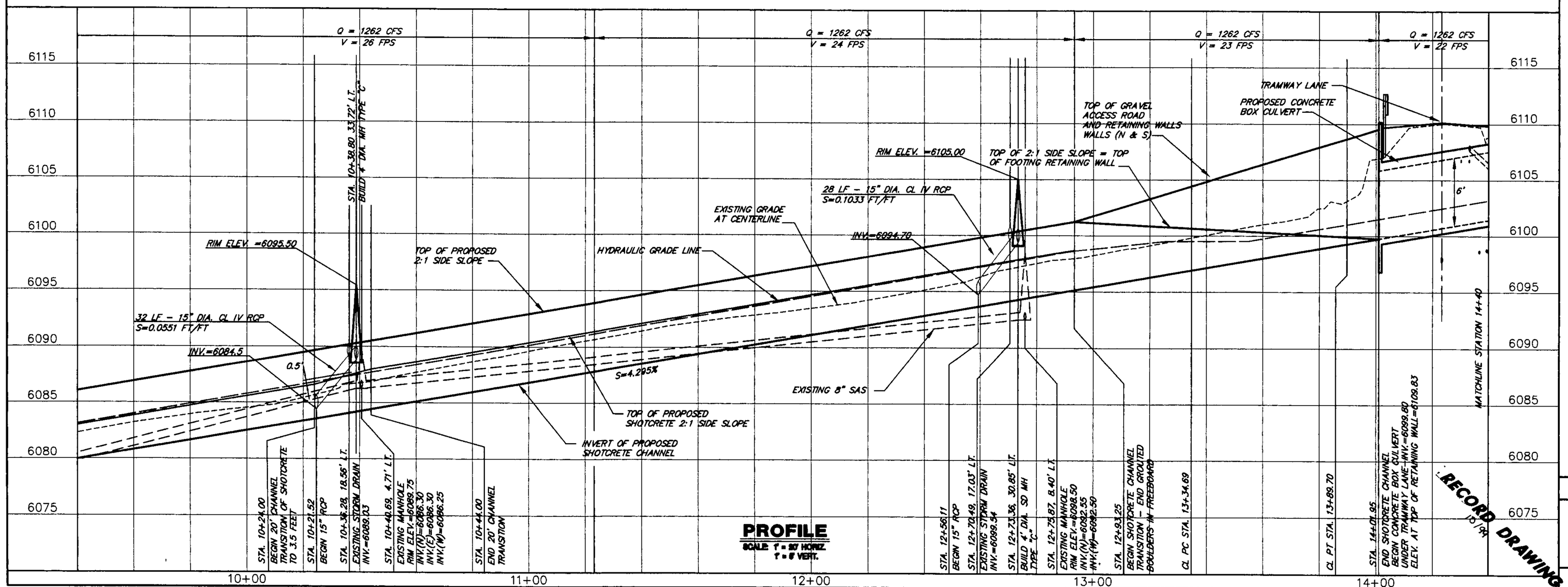

PROFILE
SCALE: 1" = 20' HORIZ. 1" = 6' VERT.

CURVE DATA

③ CL CURVE DATA
Δ = 15°45'40"
R = 200.00'
T = 27.68'
L = 55.02'

④ CURVE DATA
Δ = 21°18'54"
R = 115.80'
T = 21.79'
L = 43.08
PC STA. 13+51.30
PT STA. 13+93.25

⑤ CURVE DATA
Δ = 15°45'40"
R = 268.10'
T = 37.11'
L = 73.75'
PC STA. 13+22.10
PT STA. 13+93.25

⑥ CURVE DATA
Δ = 15°45'40"
R = 215.10'
T = 29.77'
L = 59.16'
PC STA. 12+93.25
PT STA. 13+52.81

⑦ CURVE DATA
Δ = 15°45'40"
R = 185.00'
T = 25.61'
L = 50.89'
PC STA. 13+40.42
PT STA. 13+93.25

⑧ CURVE DATA
Δ = 27°40'26"
R = 405.57'
T = 99.90'
L = 195.89'

LEGEND

- EXISTING PROPERTY LINE
- EXISTING EASEMENT LINE
- 6079 EXISTING 1' CONTOUR
- 6080 EXISTING 5' CONTOUR
- 6084 PROPOSED 1' CONTOUR
- 6085 PROPOSED 5' CONTOUR
- EXISTING EDGE OF PAVEMENT
- PROPOSED EDGE OF PAVEMENT
- 8"SAS EXISTING SANITARY SEWER LINE WITH MANHOLE
- 8"SAS PROPOSED SANITARY SEWER LINE WITH MANHOLE
- 6"W EXISTING WATER LINE WITH WATER VALVE
- W PROPOSED WATER LINE WITH WATER VALVE
- 15"SD EXISTING STORM DRAIN
- 15"SD PROPOSED STORM DRAIN
- PROPOSED CHANNEL CENTERLINE
- EXISTING CONCRETE CHANNEL
- PROPOSED SHOTCRETE CHANNEL
- E EXISTING UNDERGROUND ELECTRICAL LINE
- G EXISTING GAS LINE
- EXISTING POWER POLE
- PROPOSED GABION DIKE
- EXISTING BUILDING
- PROPOSED PLACED BOULDERS
- HYDRAULIC GRADE LINE
- PROPOSED BOLDERS
- LIMITS OF PAVEMENT REMOVAL

REGISTERED PROFESSIONAL ENGINEER STATE OF NEW MEXICO JOHN A. ANDREWS

ALBUQUERQUE METROPOLITAN ARROYO FLOOD CONTROL AUTHORITY AND BERNALILLO COUNTY PUBLIC WORKS

NORTH DOMINGO BACA ARROYO

TRAMWAY BOULEVARD NE. TO TRAMWAY LANE NE.

PLAN & PROFILE STA. 9+40 TO 14+40

ANDREWS, ASBURY & ROBERT, INC.
CONSULTING ENGINEERS
ALBUQUERQUE NEW MEXICO

FILE No	DRAWN	CHECKED	DATE	SHEET	OF
94-688	ACE	PJG, JA	JAN. 1999	4	16

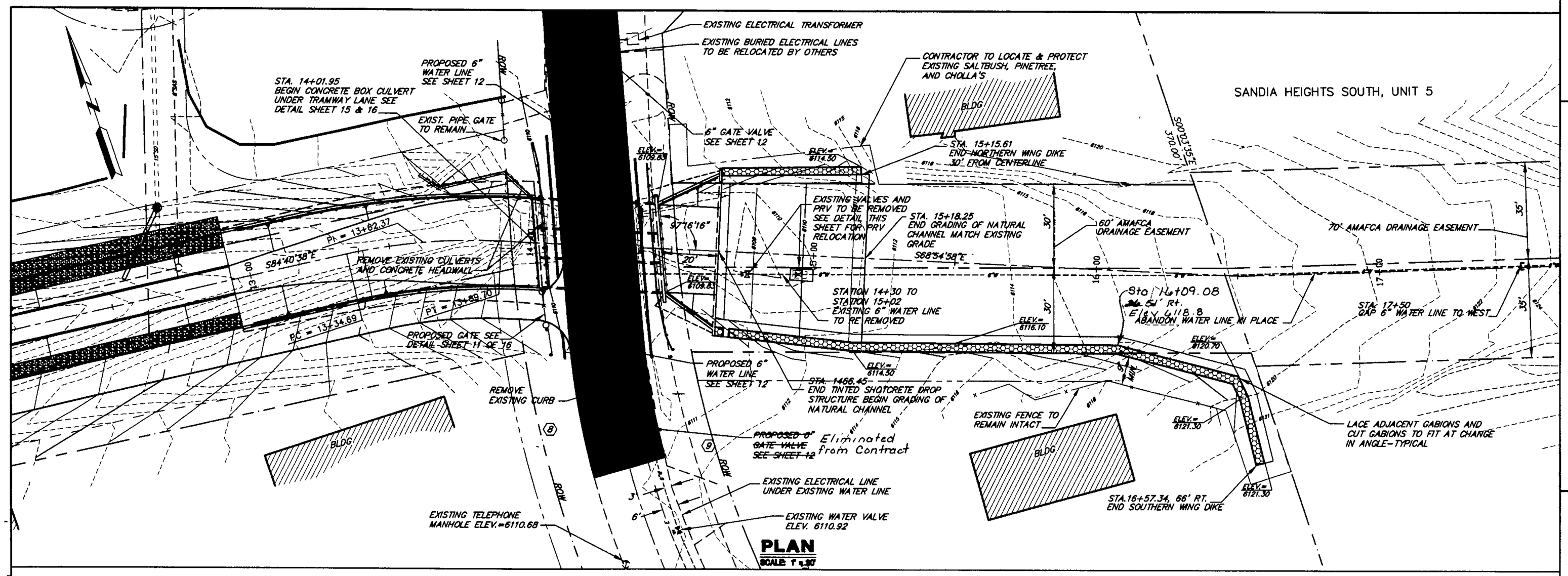

CURVE DATA

(8) CURVE DATA	(9) CURVE DATA
Δ = 27°40'26"	Δ = 27°40'26"
R = 405.57'	R = 345.57'
T = 99.90'	T = 85.12'
L = 195.89'	L = 166.91'

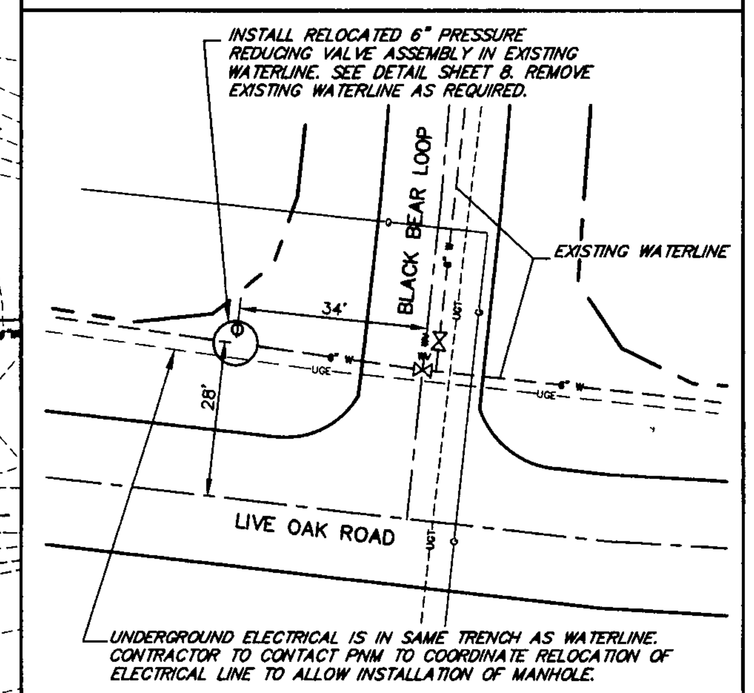

PRESSURE REDUCING VALVE RELOCATION PLAN

WATER SHUT OFF NOTES:

CONTRACTOR TO LIMIT WATER SHUTOFF TIME TO ADJACENT RESIDENTS TO A MAXIMUM OF 2 HOURS. IF LONGER SHUT OFF TIME IS NECESSARY, CONTRACTOR SHALL PROVIDE TEMPORARY WATER SERVICE TO AFFECTED RESIDENCES.

NOTE:

ALL SPOT ELEVATIONS ARE AT TOP OF GABION BASKETS OR RETAINING WALLS, UNLESS NOTED OTHERWISE.

NORTH DOMINGO BACA ARROYO

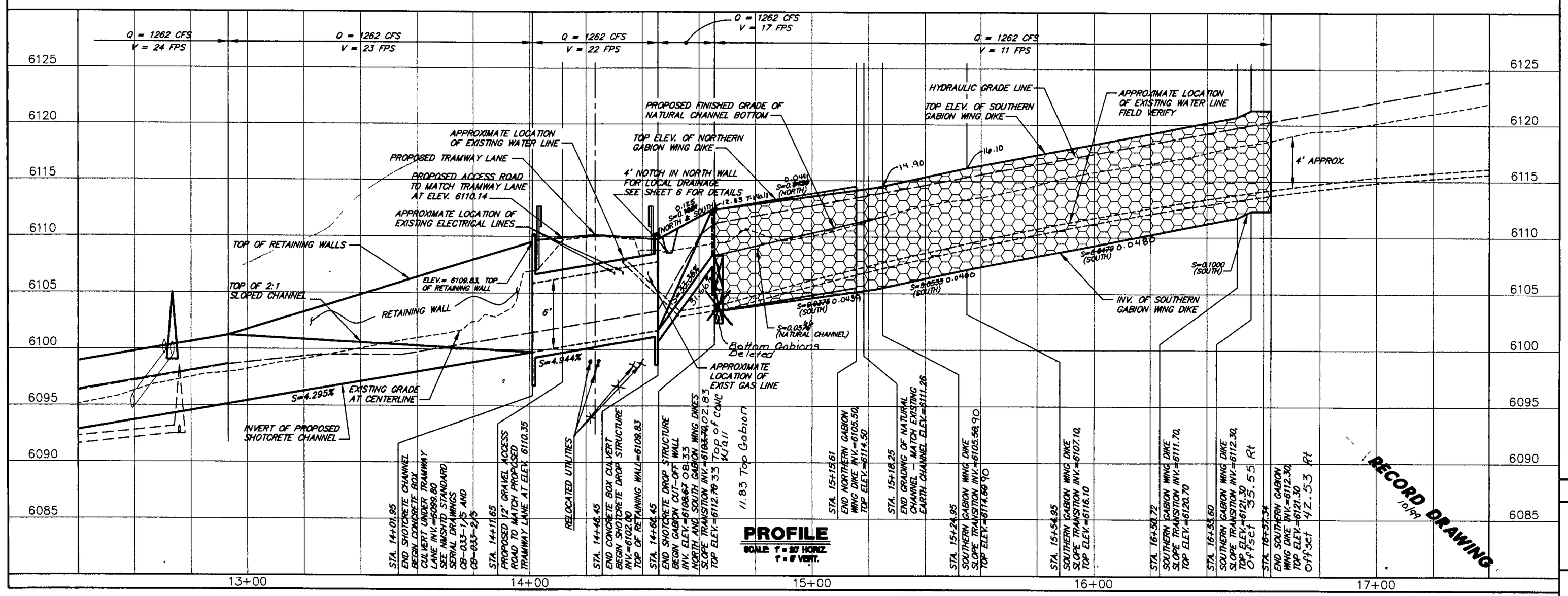

LEGEND

- EXISTING PROPERTY LINE
- EXISTING EASEMENT LINE
- EXISTING 1' CONTOUR
- EXISTING 5' CONTOUR
- PROPOSED 1' CONTOUR
- PROPOSED 5' CONTOUR
- EXISTING EDGE OF PAVEMENT
- PROPOSED EDGE OF PAVEMENT
- EXISTING SANITARY SEWER LINE WITH MANHOLE
- PROPOSED SANITARY SEWER LINE WITH MANHOLE
- EXISTING WATER LINE WITH WATER VALVE
- PROPOSED WATER LINE WITH WATER VALVE
- EXISTING STORM DRAIN
- PROPOSED STORM DRAIN
- PROPOSED CHANNEL CENTERLINE
- EXISTING CONCRETE CHANNEL
- PROPOSED SHOTCRETE CHANNEL
- EXISTING UNDERGROUND ELECTRICAL LINE
- EXISTING GAS LINE
- EXISTING POWER POLE
- PROPOSED GABION DIKE
- EXISTING BUILDING
- PROPOSED PLACED BOULDERS
- HYDRAULIC GRADE LINE
- PROPOSED BOLDERS
- LIMITS OF PAVEMENT REMOVAL

REGISTERED PROFESSIONAL ENGINEER STATE OF NEW MEXICO No. 13990 JOHN A. ANDREWS

ALBUQUERQUE METROPOLITAN ARROYO FLOOD CONTROL AUTHORITY AND BERNALILLO COUNTY PUBLIC WORKS

NORTH DOMINGO BACA ARROYO

TRAMWAY BOULEVARD NE. TO TRAMWAY LANE NE.

PLAN & PROFILE STA. 14+40 TO 17+00

ANDREWS, ASBURY & ROBERT, INC.
CONSULTING ENGINEERS
ALBUQUERQUE NEW MEXICO

FILE No	DRAWN	CHECKED	DATE	SHEET	OF
94-688	ACE	PJG, JA	JAN. 1999	5	16

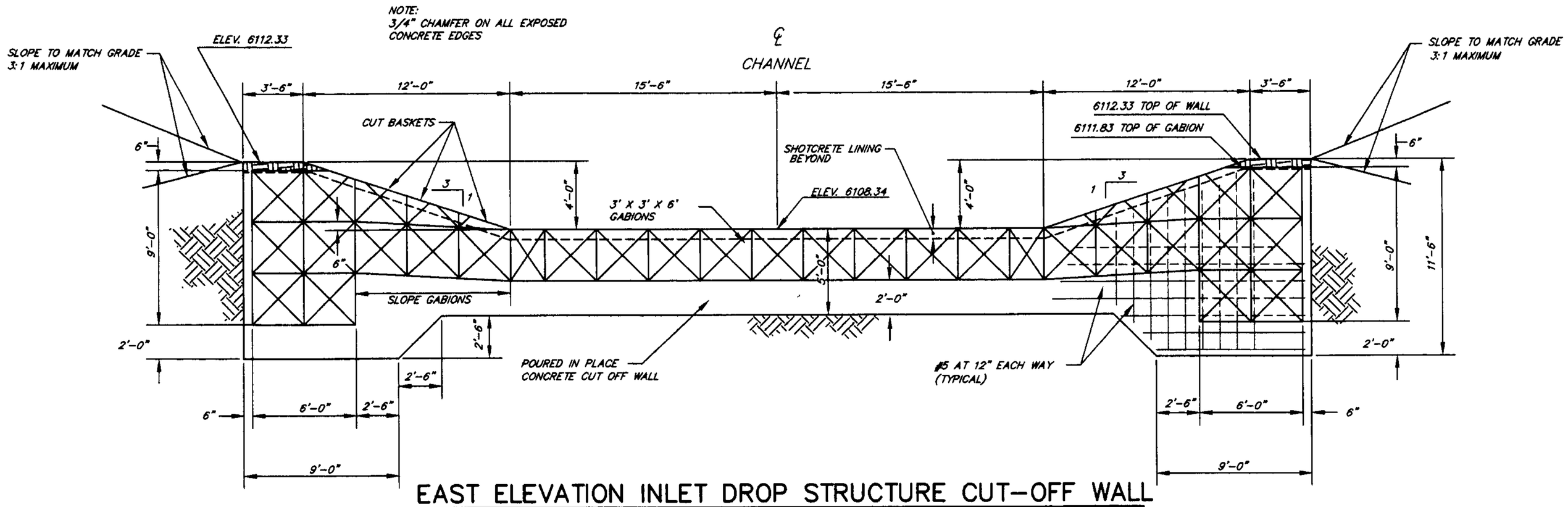

EAST ELEVATION INLET DROP STRUCTURE CUT-OFF WALL

SCALE: 1/4" = 1'-0"

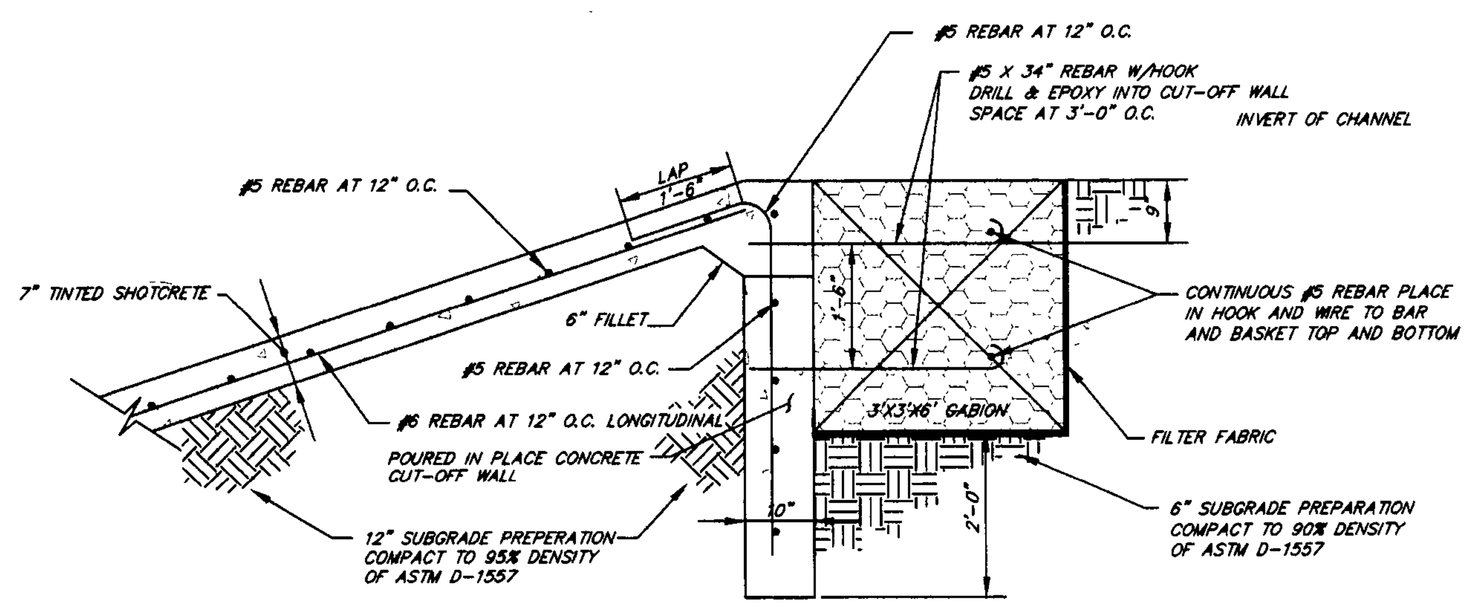

DROP STRUCTURE AND CUT-OFF WALL DETAIL

SCALE: 3/4" = 1'-0"

REGISTERED PROFESSIONAL ENGINEER STATE OF NEW MEXICO No. 3980 JOHN A. ANDREWS

RECORD DRAWING 10/99

ALBUQUERQUE METROPOLITAN ARROYO FLOOD CONTROL AUTHORITY AND BERNALILLO COUNTY OF PUBLIC WORKS

NORTH DOMINGO BACA ARROYO

TRAMWAY BOULEVARD TO TRAMWAY LANE

CUT-OFF WALL DETAILS

ANDREWS, ASBURY & ROBERT, INC.
CONSULTING ENGINEERS
ALBUQUERQUE NEW MEXICO

FILE No	DRAWN	CHECKED	DATE	SHEET
94-688	PDF	PJG, JA	APR. 1999	5A OF 16

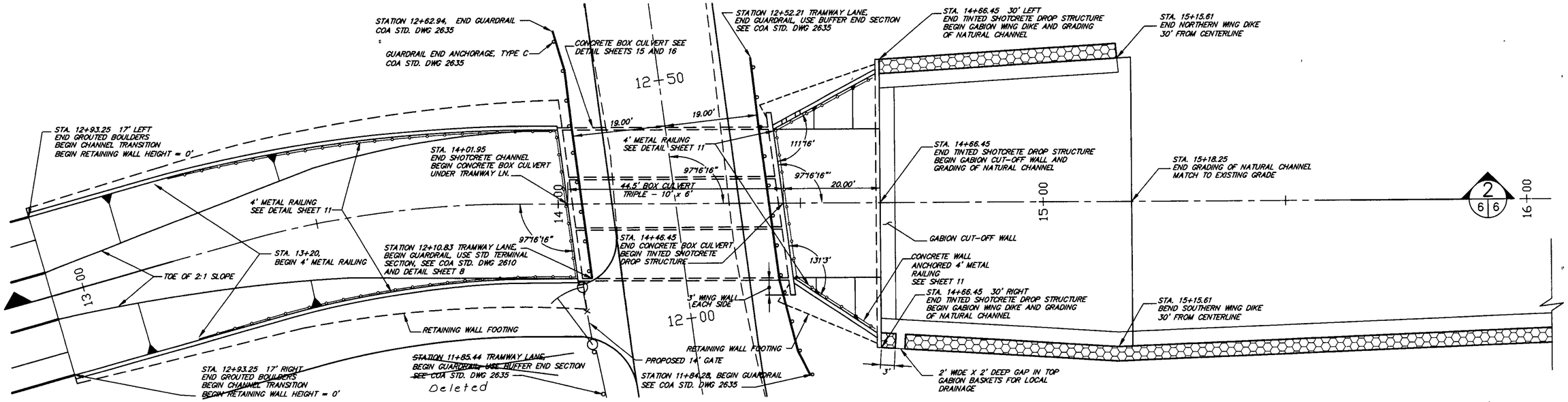

PLAN STA. 13+00 TO 16+00

SCALE: 1:10

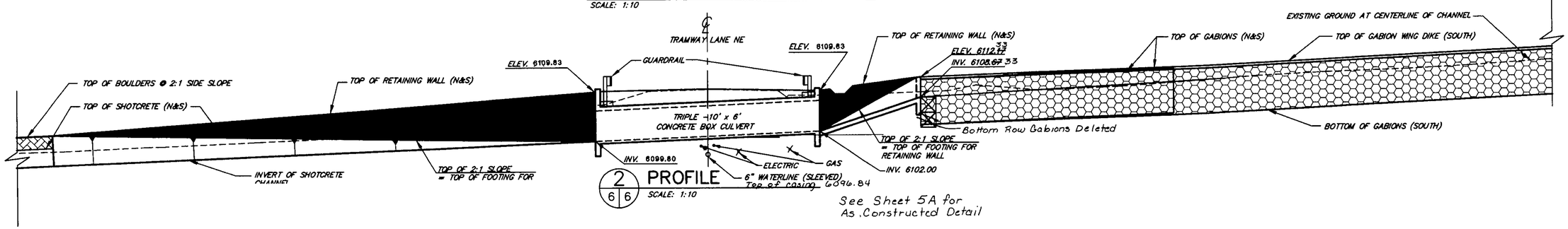

2
6 6

PROFILE

SCALE: 1:10

See Sheet 5A for As Constructed Detail

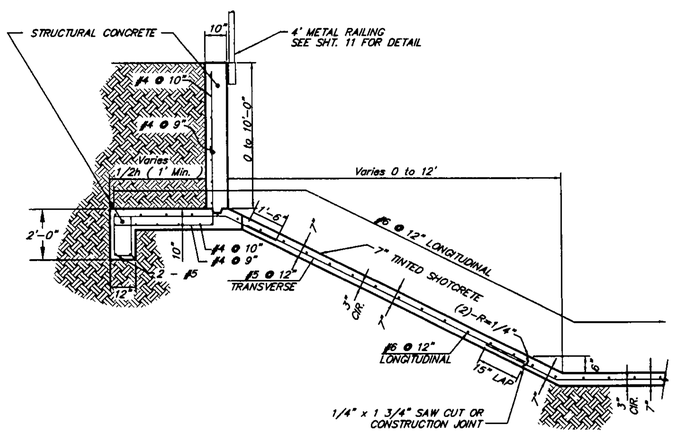

TYPICAL CHANNEL RETAINING WALL

SCALE: 3/8" = 1'-0"

RECORD DRAWING 10/99

REGISTERED PROFESSIONAL ENGINEER STATE OF NEW MEXICO JOHN A. ANDREWS

ALBUQUERQUE METROPOLITAN ARROYO FLOOD CONTROL AUTHORITY AND BERNALILLO COUNTY OF PUBLIC WORKS

NORTH DOMINGO BACA ARROYO

TRAMWAY BOULEVARD TO TRAMWAY LANE

TRAMWAY LANE CROSSING DETAILS

ANDREWS, ASBURY & ROBERT, INC.
CONSULTING ENGINEERS
ALBUQUERQUE NEW MEXICO

FILE No.	DRAWN	CHECKED	DATE	SHEET	OF
94-688	ACE	PJG, JA	JAN. 1999	6	16

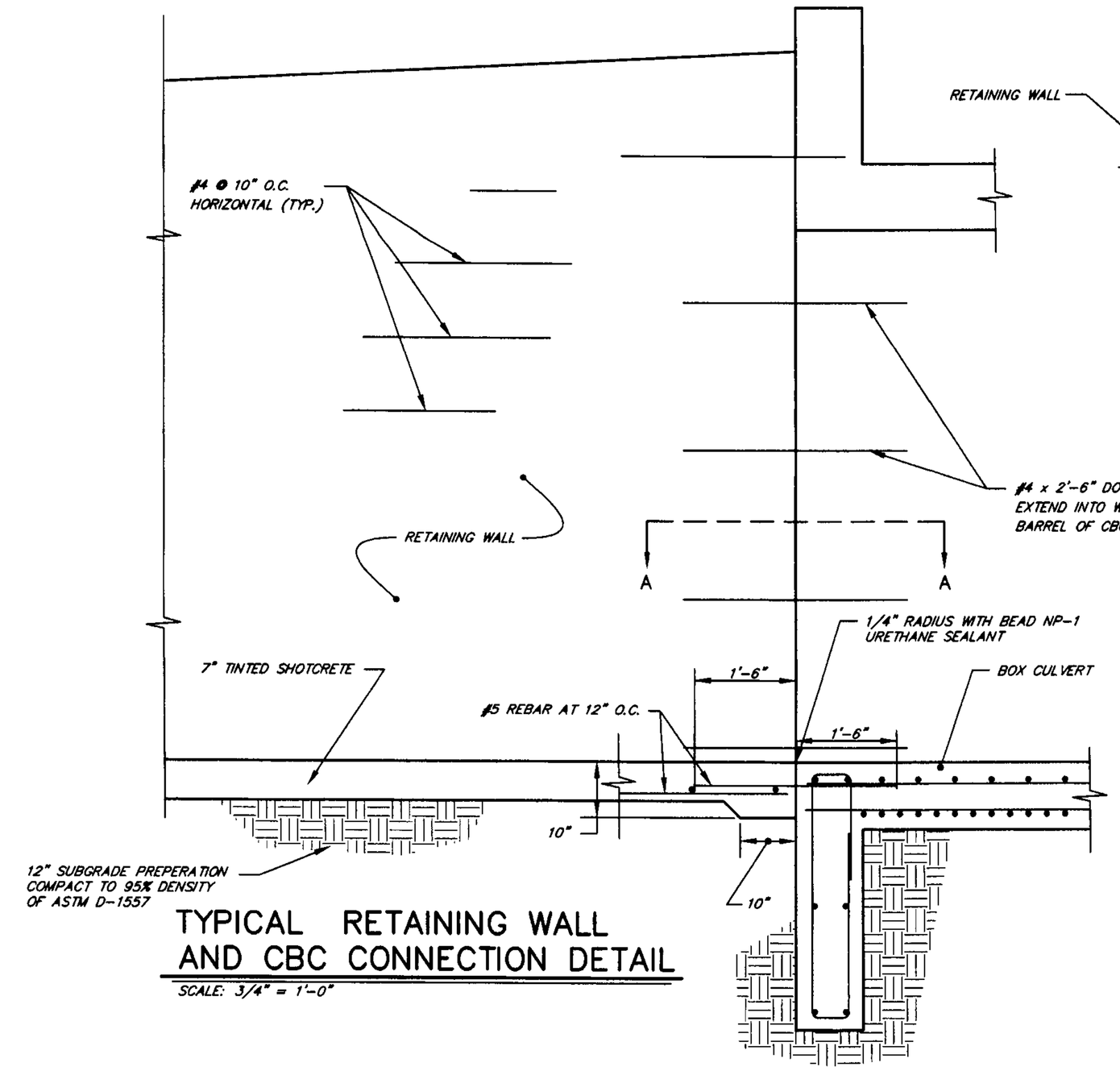

TYPICAL RETAINING WALL AND CBC CONNECTION DETAIL

SCALE: 3/4" = 1'-0"

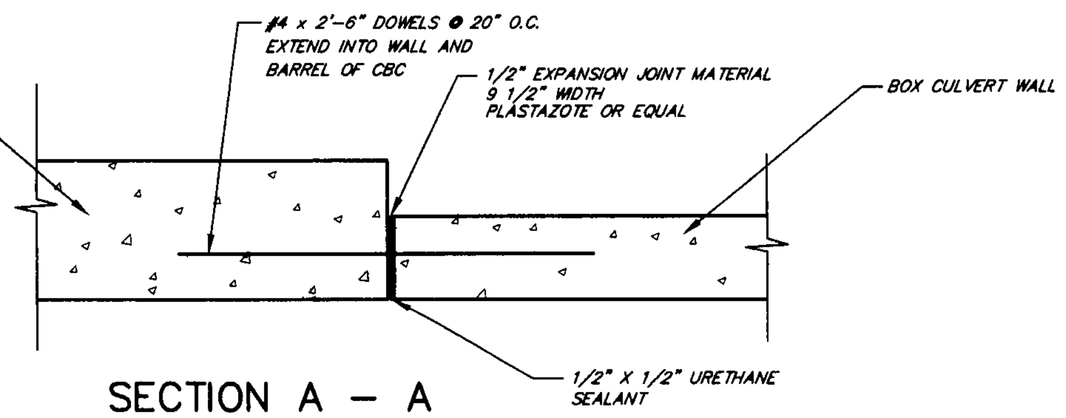

SECTION A – A

SCALE: 1 1/2" = 1' – 0"

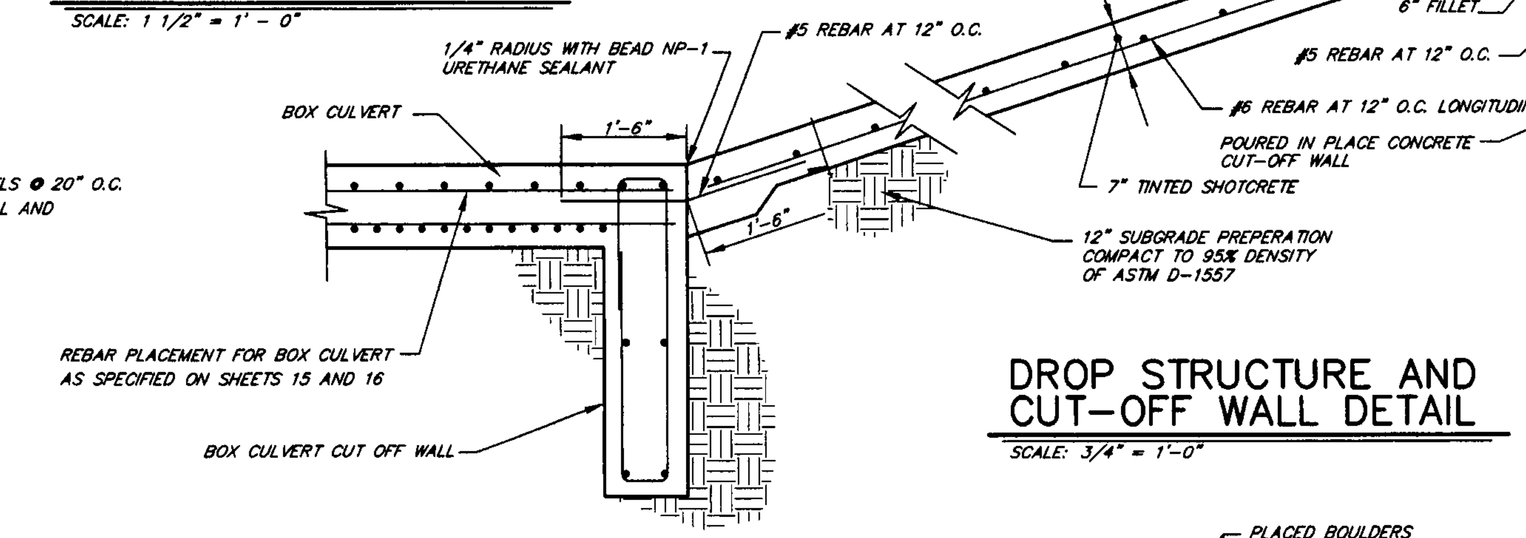

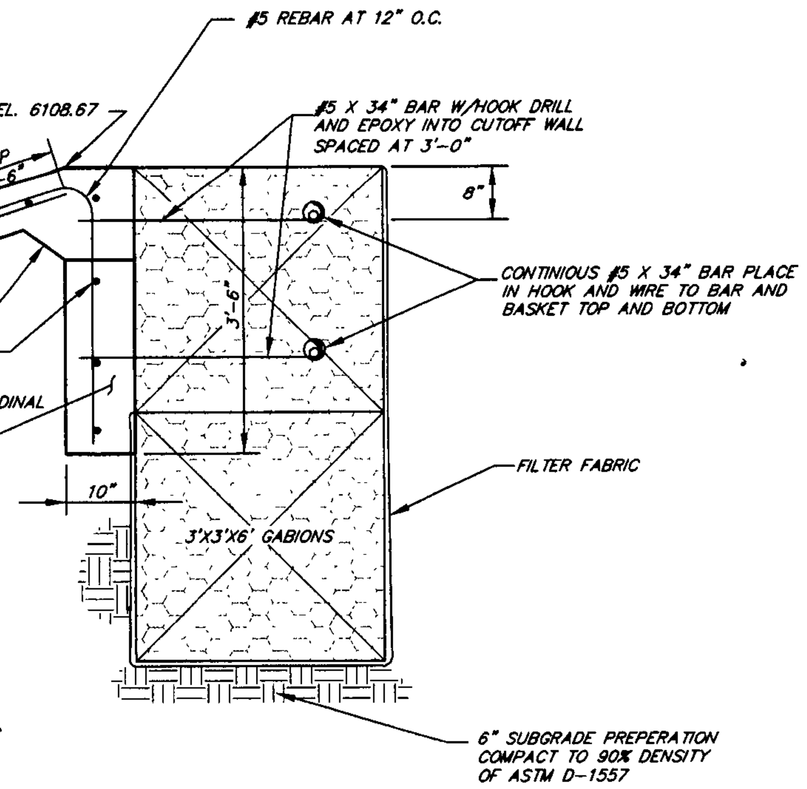

DROP STRUCTURE AND CUT-OFF WALL DETAIL

SCALE: 3/4" = 1'-0"

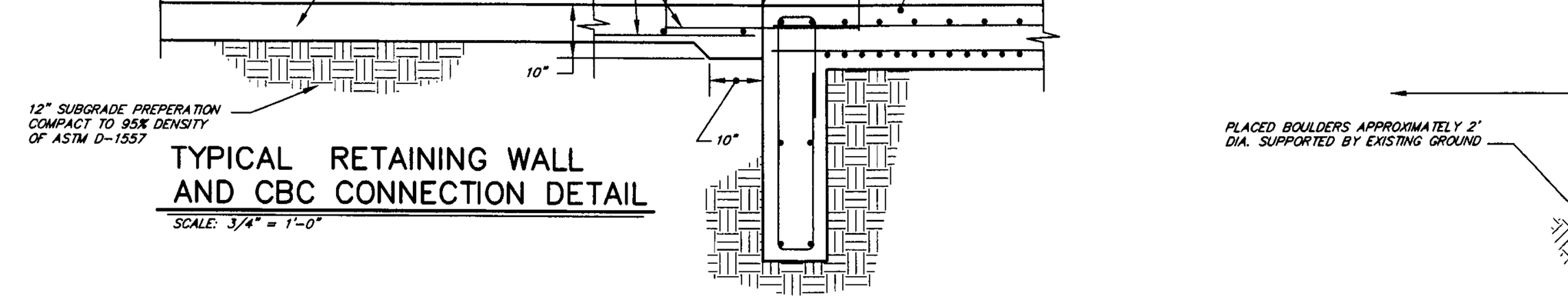

TYPICAL CHANNEL SECTION

SCALE: 1/4" = 1'-0"

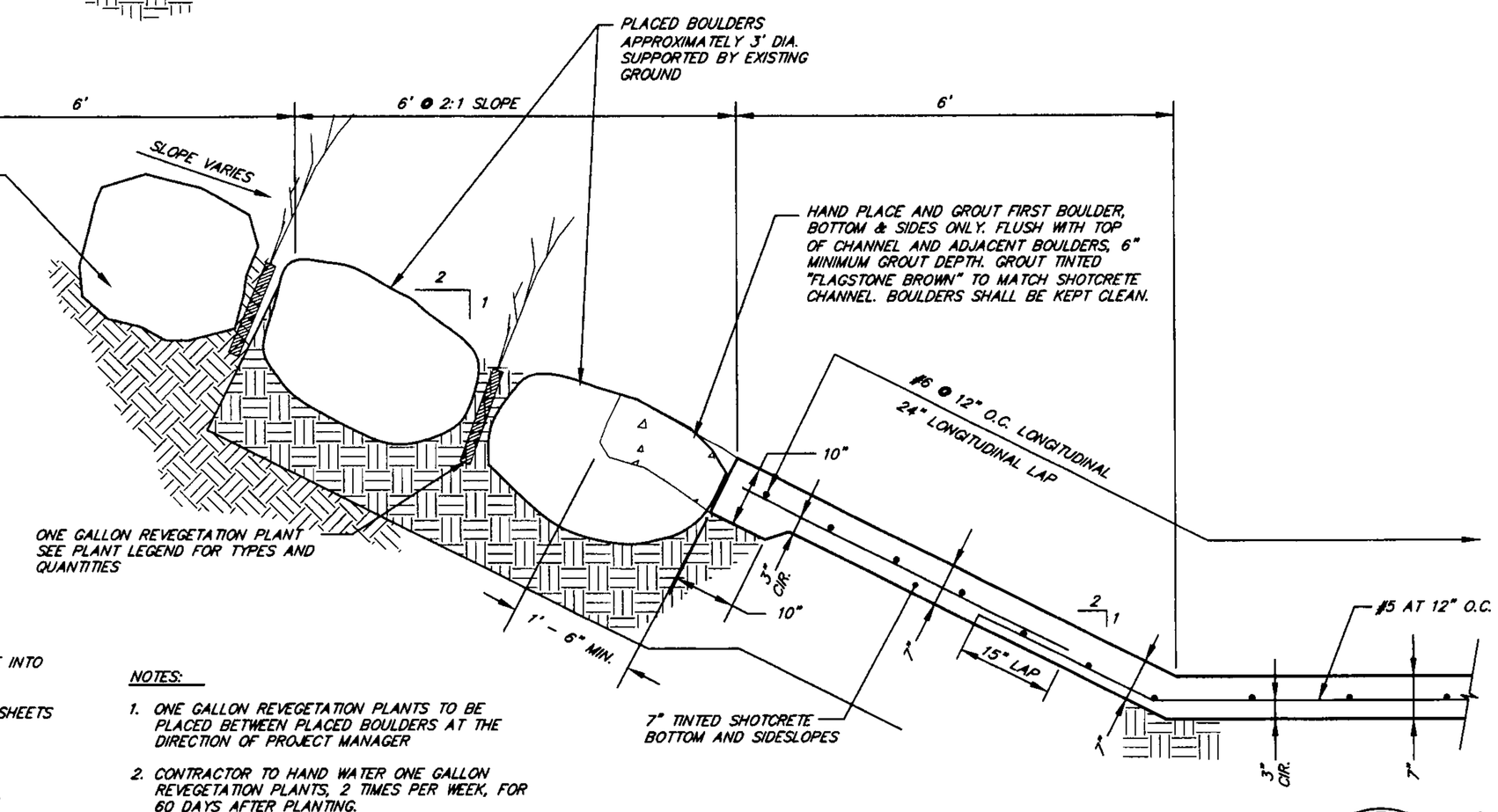

NOTES:

1. ONE GALLON REVEGETATION PLANTS TO BE PLACED BETWEEN PLACED BOULDERS AT THE DIRECTION OF PROJECT MANAGER
2. CONTRACTOR TO HAND WATER ONE GALLON REVEGETATION PLANTS, 2 TIMES PER WEEK, FOR 60 DAYS AFTER PLANTING.

PLANT LEGEND

QUANTITY	BOTANIC NAME	COMMON NAME
~~150~~ 45	ATRIPLEX CANESCENS	FOURWING SALTBUSH
150	FALLUGIA PARADOXA	APACHE PLUME
30	Nolina	Bear Grass
30	Yucca Elata	Narrow Leaf Yucca
35	Cercocarpus	Mountain Mahogany

DETAIL "A"

SCALE: 3/4" = 1'-0"

REGISTERED PROFESSIONAL ENGINEER STATE OF NEW MEXICO No. 9980 JOHN A. ANDREWS

RECORD DRAWING 10/99

ALBUQUERQUE METROPOLITAN ARROYO FLOOD CONTROL AUTHORITY AND BERNALILLO COUNTY OF PUBLIC WORKS

NORTH DOMINGO BACA ARROYO

TRAMWAY BOULEVARD TO TRAMWAY LANE

CHANNELIZATION DETAILS

ANDREWS, ASBURY & ROBERT, INC.
CONSULTING ENGINEERS
ALBUQUERQUE NEW MEXICO

FILE No.	DRAWN	CHECKED	DATE	SHEET	OF
94-688	ACE	PJG, JA	JAN. 1999	7	16

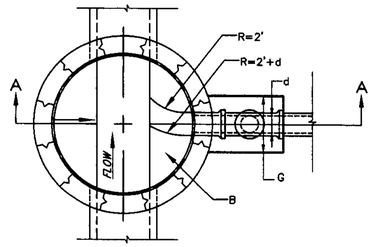

FLOOR PLAN

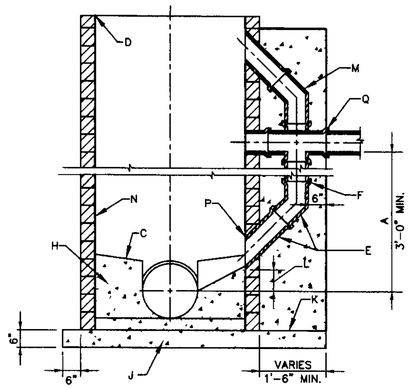

SECTION A–A

CONSTRUCTION NOTES

A. VERTICAL DROP.
B. FORM THE INVERT IN SHELF.
C. SLOPE, 1" PER FOOT.
D. MANHOLE TYPE FOR UPPER PORTION WILL BE SPECIFIED ON DESIGN PROFILE.
E. USE D.I. OR P.V.C. (SDR 35) PIPE THROUGHOUT DROP.
F. USE BELL AND SPIGOT 45° SHORT OR LONG RADIUS BEND.
G. CONCRETE SUPPORT WIDTH EQUALS PIPE O.D. PLUS 6" MIN. ON EACH SIDE.
H. CONCRETE.
J. REINFORCED CONCRETE BASE.
K. FOR NEW DROP ON EXISTING MANHOLE CONSTRUCT 3 X 3 CONCRETE BASE BEFORE CONSTRUCTION DROP SUPPORT.
L. 4" ABOVE SPRING LINE OR AS SHOWN ON PLAN.
M. 8" MIN. DIAMETER. 2–22 1/2° OR 1–45° ELBOW.
N. INTERIOR OR DROP MANHOLE MUST BE COATED WITH APPROVED SEALER.
P. CORE DRILL FOR ALL WALL PENETRATIONS ON EXISTING MANHOLES.
Q. CROSS OR TEE. A TEE MAY BE USED ONLY WHEN THE VERTICAL HIGH IS INSUFFICIENT FOR THE VERTICAL PIPING ABOVE THE SEWER LINE TO ENTER THE BARREL OF THE MANHOLE.

VERTICAL DROP AT MANHOLE DETAIL

NOT TO SCALE

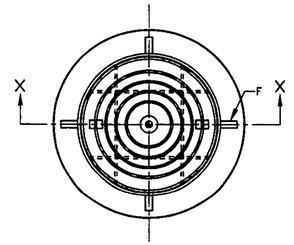

PLAN

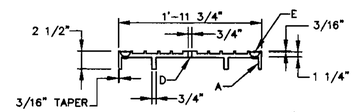

SOLID COVER (180 LB.)
SECTION X–X

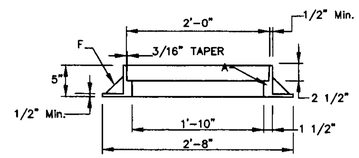

FRAME (145 lb)
SECTION X–X

CONSTRUCTION NOTES

A: MACHINED OR GROUND BEARING SURFACES.
B: "WATER", "SEWER" OR "AMAFCA STORM" CAST ON COVER TO IDENTIFY DRAINAGE SYSTEMS RESPECTIVELY

QTY.	DESCRIPTION
1	WATER
3	SEWER
2	AMAFCA STORM

C: LETTER SIZE TO BE 1" MIN. IN HEIGHT, TYPICAL.
D: VENT HOLE REQUIRED.
E: MONOLITHIC CAST IRON OR STEEL ROD INSERTS AT MANUFACTURER'S OPTION. IF INSERT IS PROVIDED IT MUST HAVE 3/16" MIN. COVER AND 3/4" END EMBEDMENT IN CASTING.
F: GUSSETS OPTIONAL IF REQUIRED BY MANUFACTURER.

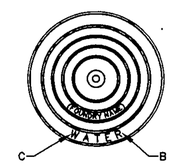

LETTERING PLAN

MANHOLE FRAME AND COVER DETAIL

NOT TO SCALE

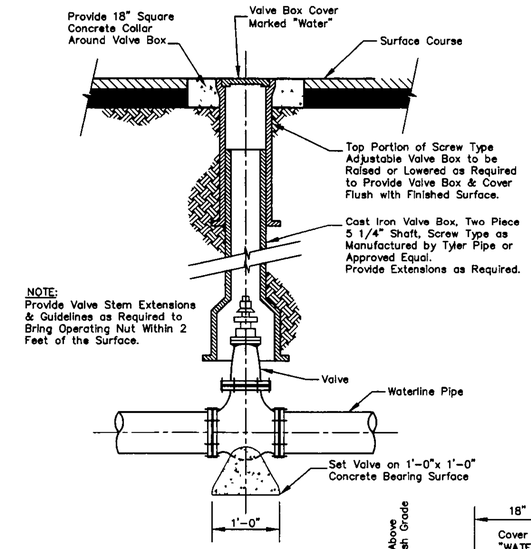

VALVE BOX DETAIL

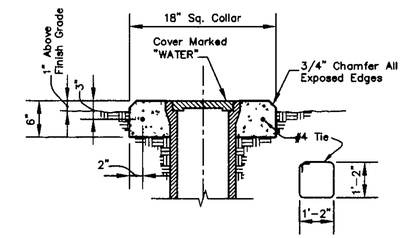

CONCRETE COLLAR DETAIL
FOR UNPAVED AREAS

WATER VALVE & VALVE BOX DETAIL

NOT TO SCALE

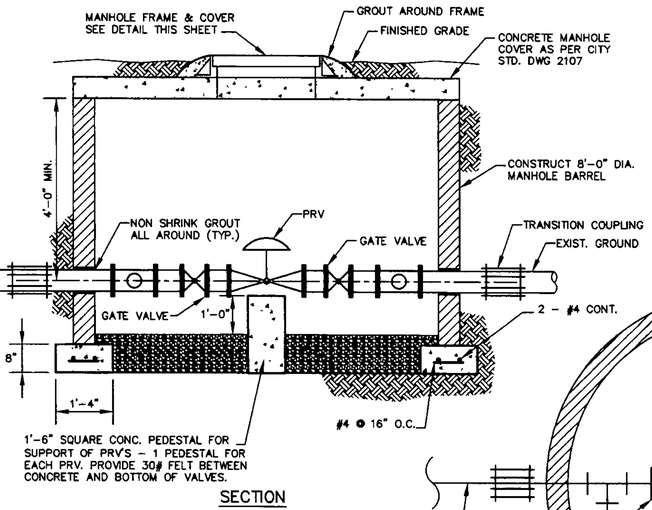

SECTION

NOTE:

REMOVE PRV ASSEMBLY FROM EXISTING LOCATION AT NORTH DOMINGO BACA ARROYO. CONSTRUCT NEW 8' DIAMETER MANHOLE AND RELOCATE REMOVED ASSEMBLY TO NEW MANHOLE LOCATION.

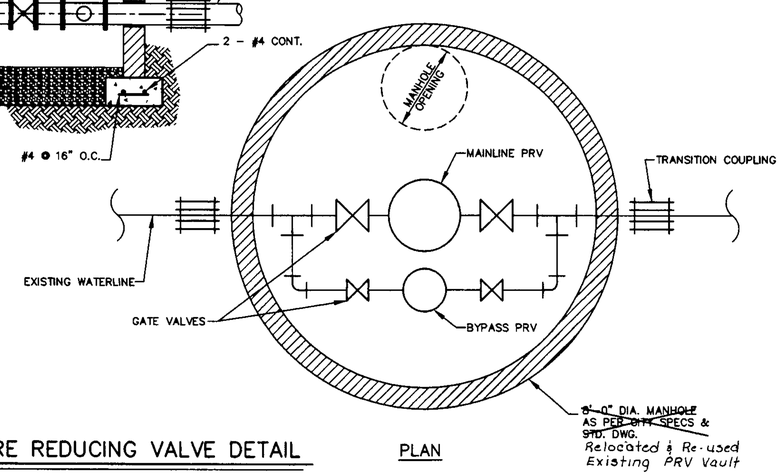

PLAN

PRESSURE REDUCING VALVE DETAIL

NOT TO SCALE

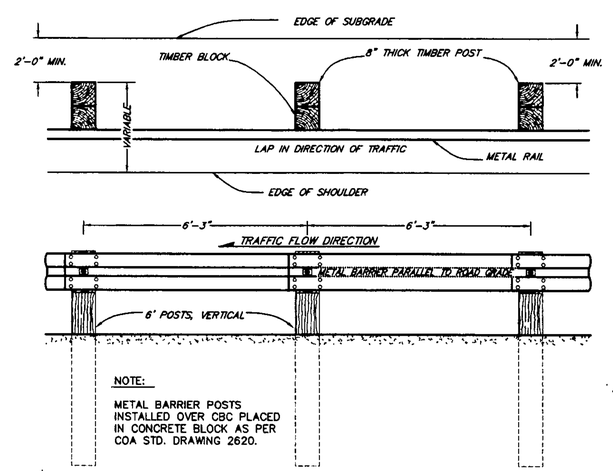

NOTE:

METAL BARRIER POSTS INSTALLED OVER CBC PLACED IN CONCRETE BLOCK AS PER COA STD. DRAWING 2620.

GUARDRAIL DETAIL

NOT TO SCALE

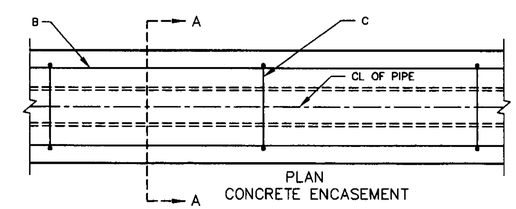

PLAN
CONCRETE ENCASEMENT

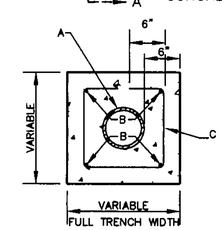

SECTION A–A

CONSTRUCTION NOTES

A: SANITARY SEWER AS SHOWN ON PLANS
B: 4 – NO. 4 BARS CONTINUOUS WITH 3" CLEARANCE.
C: NO. 4 BARS AT 36" O.C.

SEWER ENCASEMENT DETAIL

NOT TO SCALE

REGISTERED PROFESSIONAL ENGINEER — STATE OF NEW MEXICO — No. 13960 — JOHN A. ANDREWS

RECORD DRAWING 10/99

ALBUQUERQUE METROPOLITAN ARROYO FLOOD CONTROL AUTHORITY AND BERNALILLO COUNTY OF PUBLIC WORKS

NORTH DOMINGO BACA ARROYO

TRAMWAY BOULEVARD TO TRAMWAY LANE

MISCELLANEOUS DETAILS

ANDREWS, ASBURY & ROBERT, INC.
CONSULTING ENGINEERS
ALBUQUERQUE NEW MEXICO

FILE No.	DRAWN	CHECKED	DATE	
94–688	ACE	PG	JAN. 1999	SHEET 8 OF 16

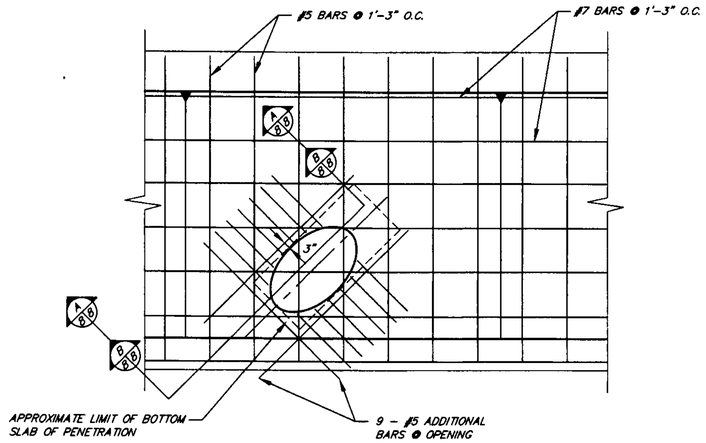

45° PIPE PENETRATION

NOT TO SCALE

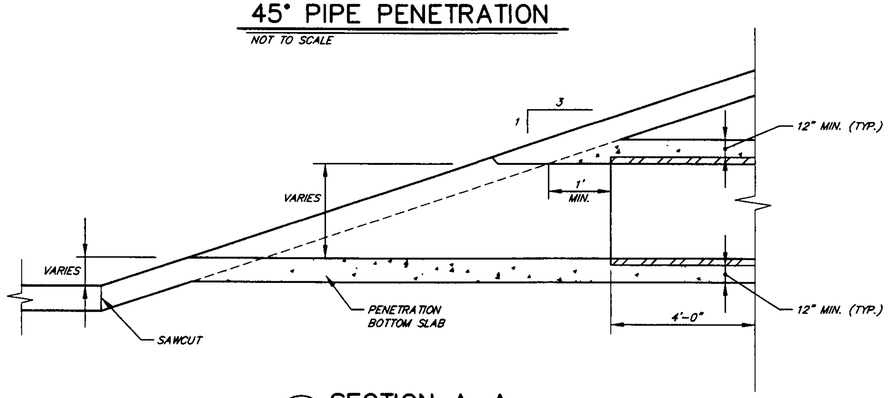

SECTION A-A

NOT TO SCALE

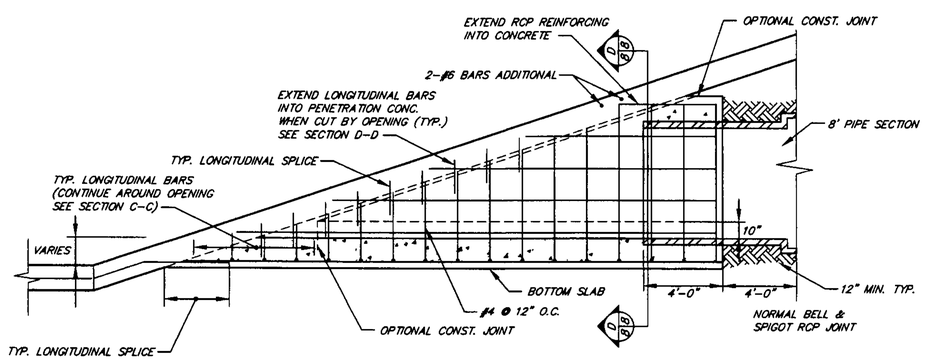

SECTION B-B

NOT TO SCALE

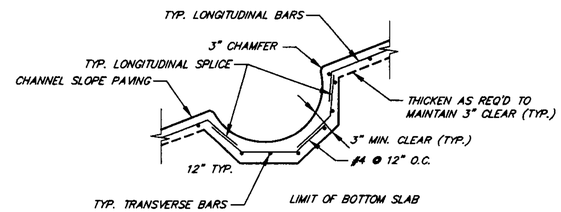

SECTION C-C

NOT TO SCALE

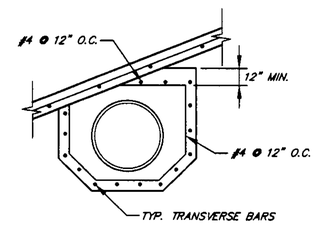

SECTION D-D

NOT TO SCALE

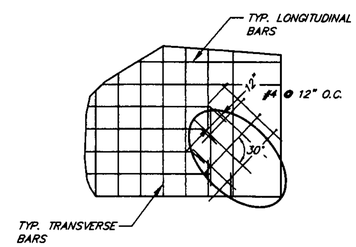

SECTION E-E

NOT TO SCALE

RECORD DRAWING 10/99

REGISTERED PROFESSIONAL ENGINEER STATE OF NEW MEXICO JOHN A. ANDREWS

ALBUQUERQUE METROPOLITAN ARROYO FLOOD CONTROL AUTHORITY AND BERNALILLO COUNTY OF PUBLIC WORKS

NORTH DOMINGO BACA ARROYO

TRAMWAY BOULEVARD TO TRAMWAY LANE

PIPE PENETRATION DETAILS

ANDREWS, ASBURY & ROBERT, INC.
ALBUQUERQUE — CONSULTING ENGINEERS — NEW MEXICO

FILE No	DRAWN	CHECKED	DATE		
94-688	ACE	PJG, JA	JAN. 1999	SHEET 9	OF 16

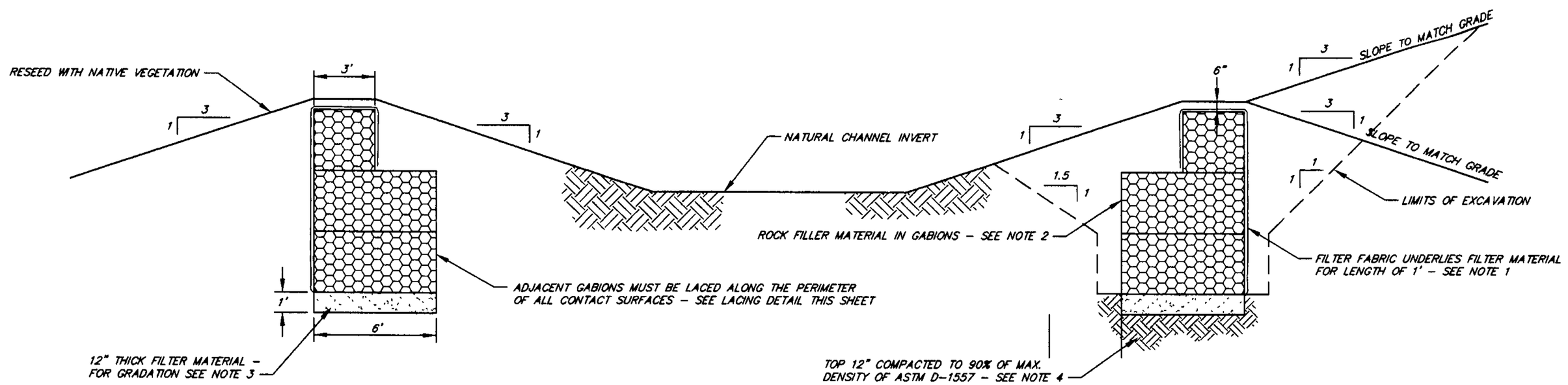

GABION DETAIL

NOT TO SCALE

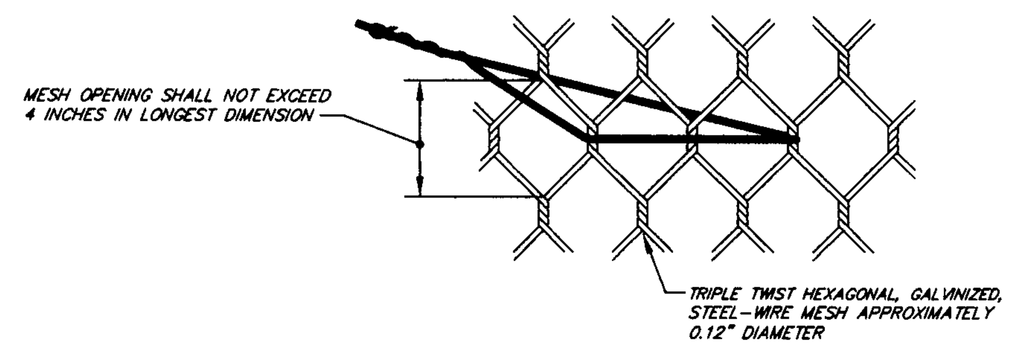

WIRE DETAIL

NOT TO SCALE

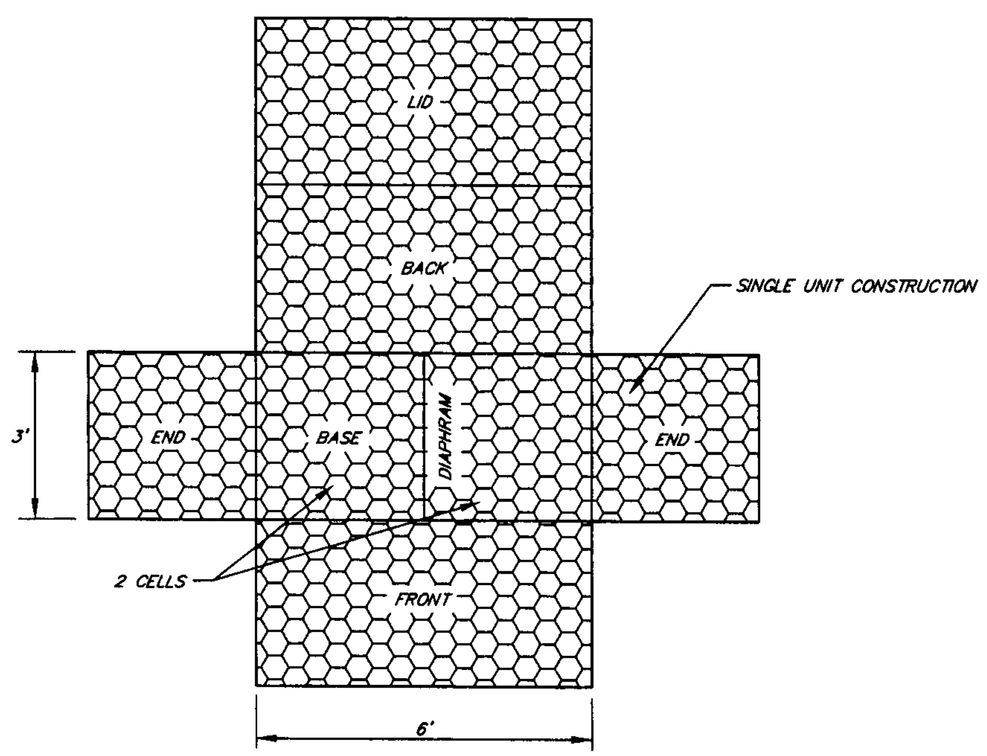

UNFOLDED 6'x3'x3' GABION DETAIL

SCALE: 1/2" = 1'-0"

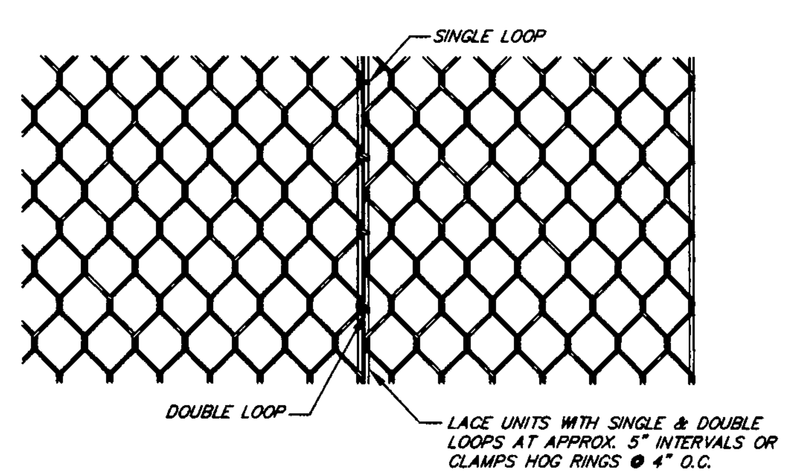

LACING DETAIL

NOT TO SCALE

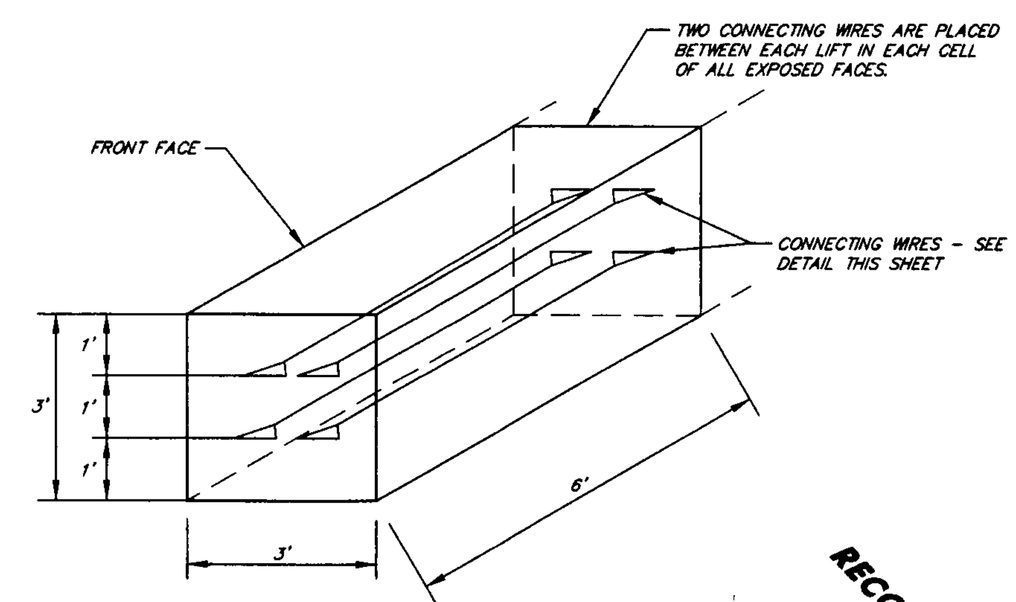

CONNECTING WIRE DETAIL

SCALE: 3/4" = 1'-0"

CONSTRUCTION NOTES

1. THE FILTER FABRIC SHALL BE A NON-WOVEN POLYESTER GEOTEXTILE, SUCH AS: MIRAFI No. 140N DRAINAGE FABRIC, MIRAFI INC., CHAROLETTE, NORTH CAROLINA, OR APPROVED EQUAL.

   THE SURFACE TO RECEIVE THE FILTER FABRIC SHALL BE PREPARED TO A RELATIVELY SMOOTH CONDITION FREE OF OBSTRUCTIONS, DEPRESSIONS, AND DEBRIS. THE CLOTH SHALL NOT BE LAID LOOSELY WITH A LONG DIMENSION PERPENDICULAR TO THE CHANNEL CENTERLINE. THE CLOTH SHALL BE PLACED SO THE UPSTREAM EDGE OVERLAPS THE DOWNSTREAM EDGE A MINIMUM OF 12 INCHES, WITH SECURING PINS INSERTED THROUGH BOTH LAYERS AT NO GREATER THAN TWO-FOOT INTERVALS.

2. ROCK FILLER MATERIAL WILL MEET THE FOLLOWING GRADATION:

MAX. DIMENSIONS (INCHES)	% SMALLER
8"	100
4"	10

3. GRAVEL FILTER MATERIAL SHALL BE USED AS A 12" THICK SUBBASE FOR THE GABION BASKETS. MIN. SPECIFIC GRAVITY = 2.65. FILTER MATERIAL SHALL MEET THE FOLLOWING GRADATION:

U.S. STANDARD SIEVE SIZE	% SMALLER
3"	90-100
3/4"	20-90
#4	0-20
#200	0-3

4. EARTH SURFACES SHALL BE SHAPED AND TRIMMED TO PROVIDE EVEN SURFACES PRIOR TO THE PLACEMENT AND COMPACTION OF THE FILTER MATERIAL AND FILTER FABRIC.

RECORD DRAWING 10/99

REGISTERED PROFESSIONAL ENGINEER STATE OF NEW MEXICO No. 5080 JOHN A. ANDREWS

ALBUQUERQUE METROPOLITAN ARROYO FLOOD CONTROL AUTHORITY AND BERNALILLO COUNTY OF PUBLIC WORKS

NORTH DOMINGO BACA ARROYO

TRAMWAY BOULEVARD TO TRAMWAY LANE

GABION DETAILS

ANDREWS, ASBURY & ROBERT, INC.
CONSULTING ENGINEERS
ALBUQUERQUE NEW MEXICO

FILE No	DRAWN	CHECKED	DATE	SHEET
94-688	ACE	PJG, JA	JAN. 1999	10 OF 16

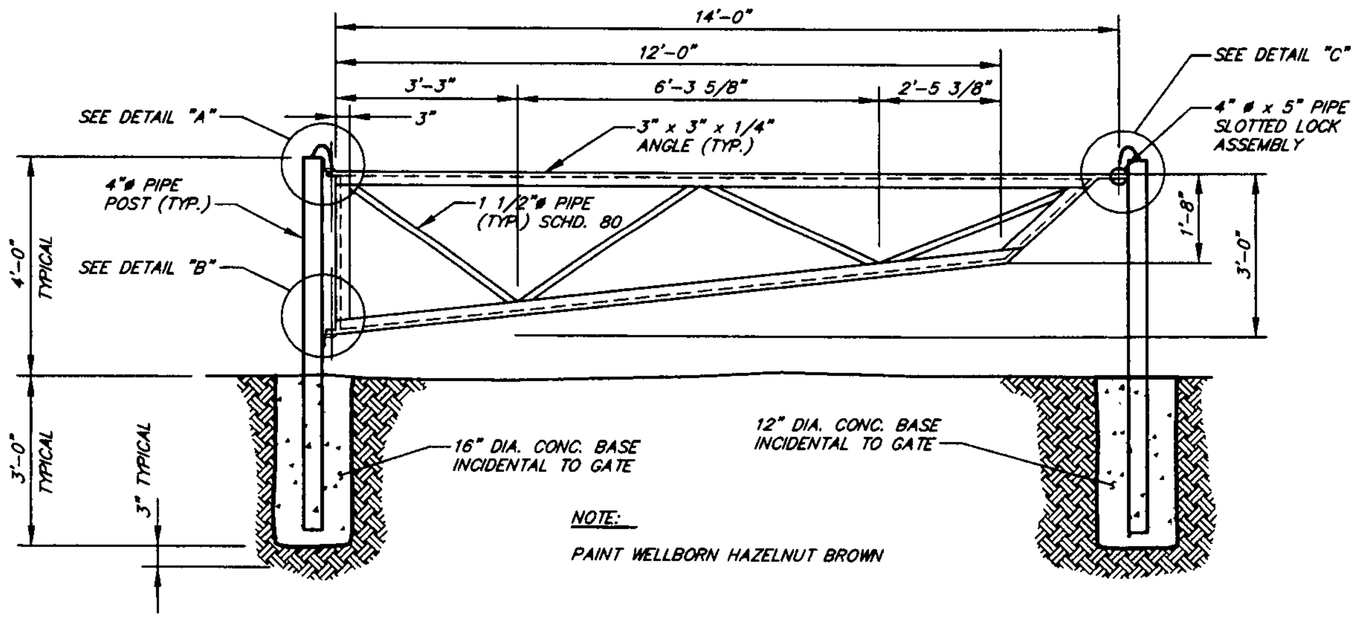

GATE ELEVATION

SCALE: 1/2" = 1'-0"

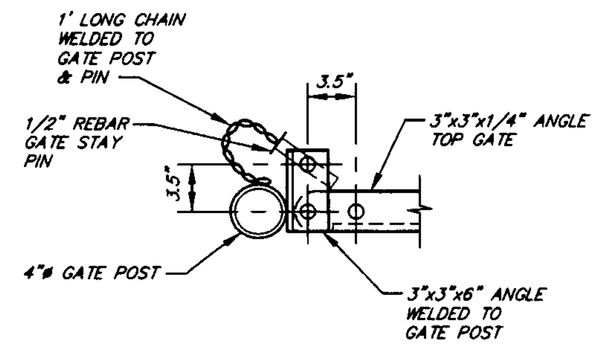

DETAIL "A"

SCALE: 1 1/2" = 1'-0"

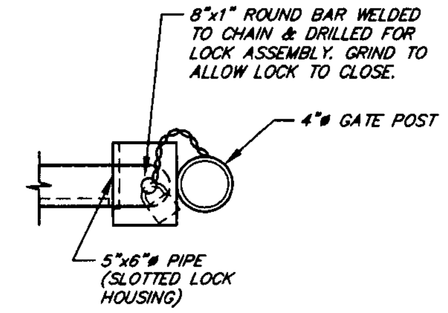

PLAN

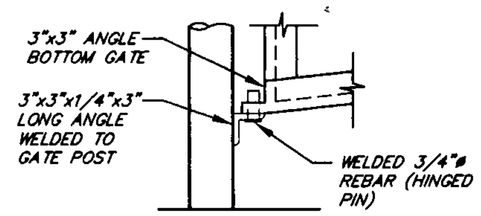

DETAIL "B"

SCALE: 1 1/2" = 1'-0"

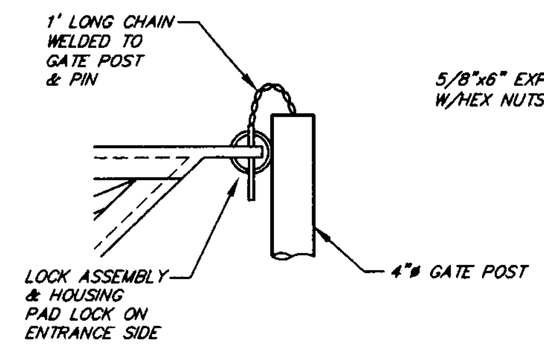

ELEVATION

DETAIL "C"

SCALE: 1 1/2" = 1'-0"

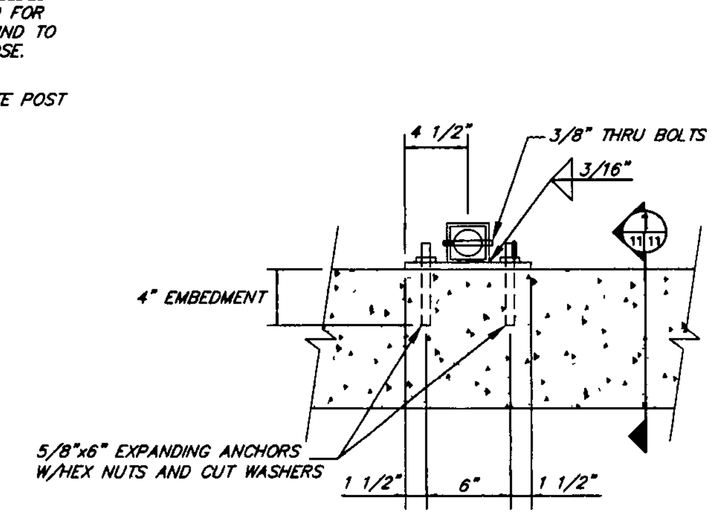

ANCHOR PLATE PLAN

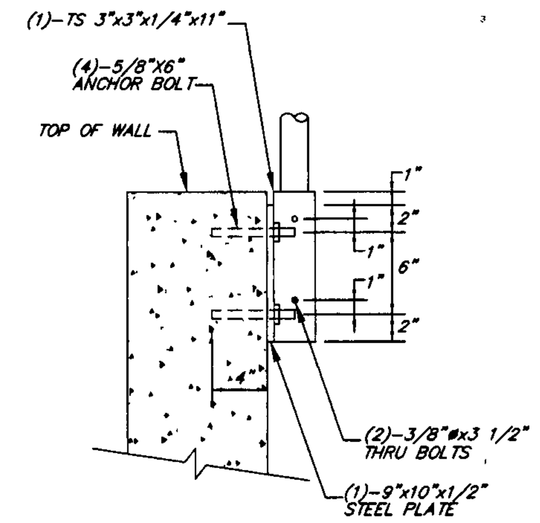

1/11 11 ANCHOR PLATE SECTION

FENCE POST CONNECTOR DETAILS

SCALE: 1/8" = 1'-0"

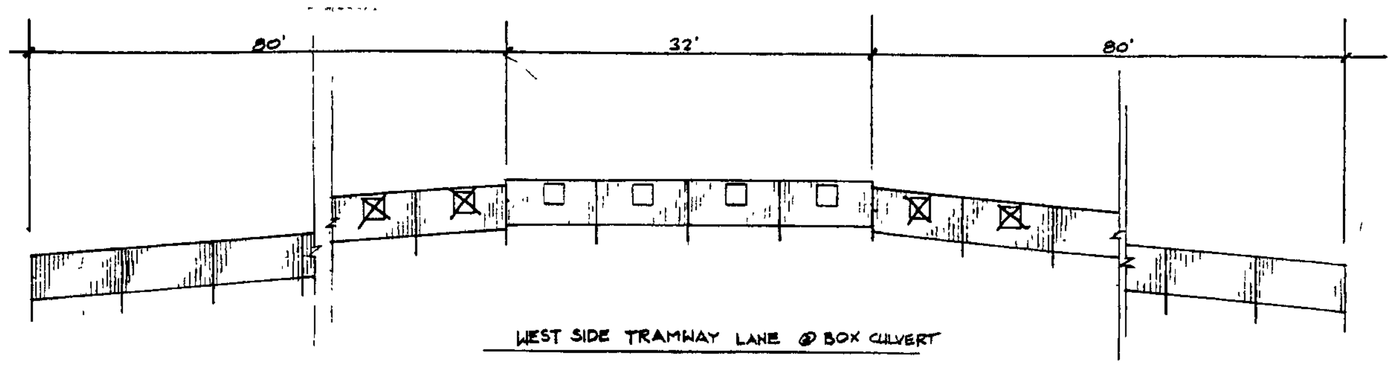

WEST SIDE TRAMWAY LANE @ BOX CULVERT

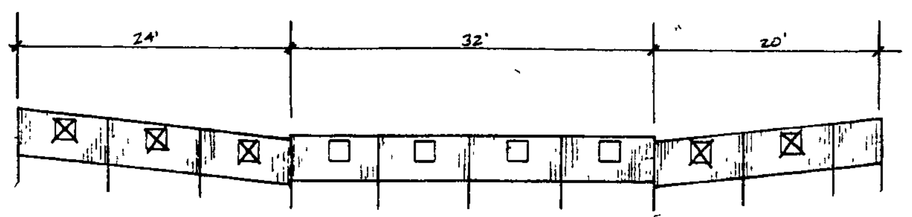

EAST SIDE TRAMWAY LANE @ BOX CULVERT

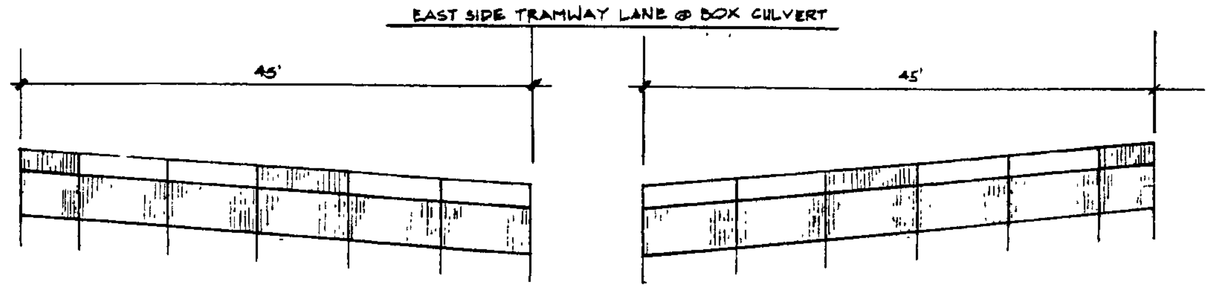

EAST SIDE TRAMWAY BLVD. @ BOX CULVERT

PIPE RAIL FENCING ELEVATIONS

N.T.S.

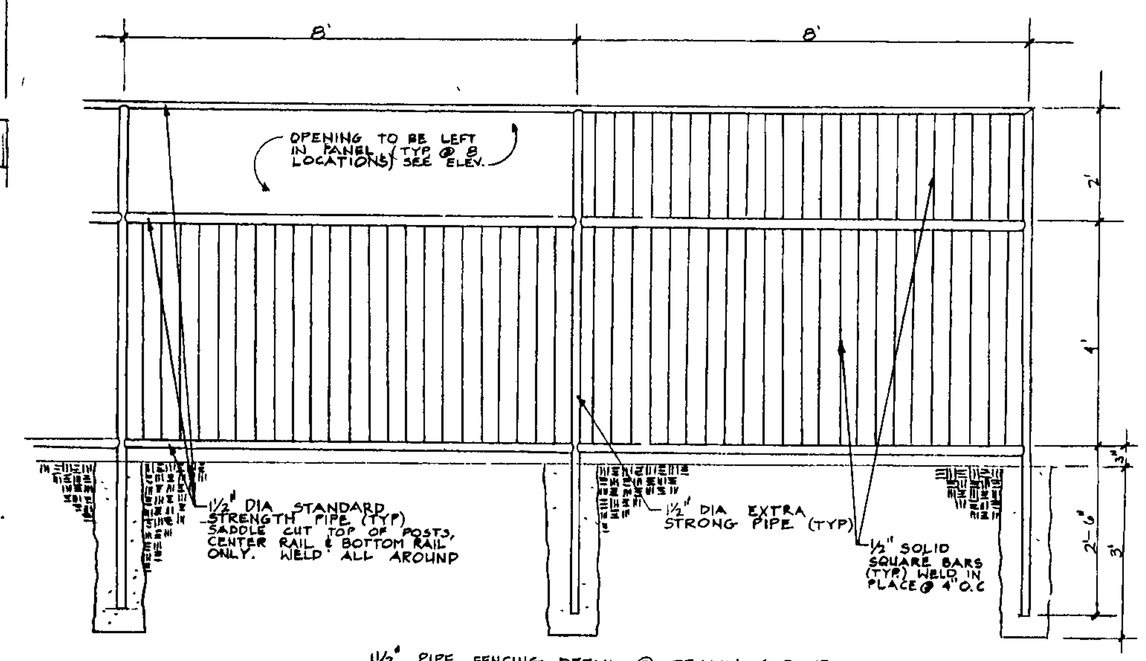

1½" PIPE FENCING DETAIL @ TRAMWAY BLVD.

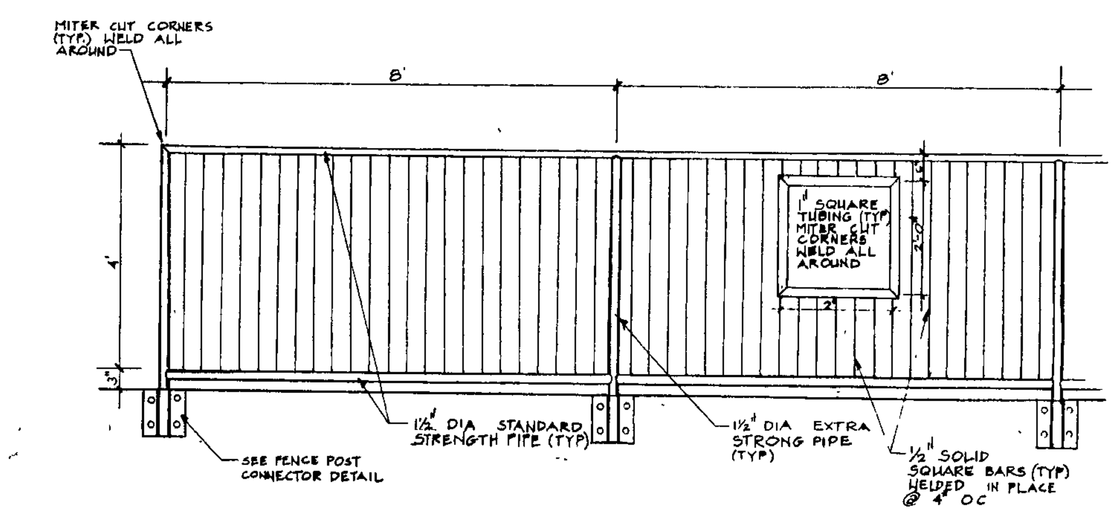

1½" PIPE FENCING DETAIL @ TRAMWAY LANE

N.T.S

Zig Zag Bars Typ. Adj to Roadway

1. SADDLE CUT TOP OF POSTS & BOTTOM RAIL ONLY (TYP) WELD ALL AROUND.
2. CLEAN AND PAINT ALL PIPE FENCE W/ PRIMER AND 1 COAT THEMEC PAINT OR APPROVED EQUAL, SUBMIT COLOR CHART TO PROJECT MANAGER.
3. 2" SQUARE OPENING IN PANEL TYP @ 17 LOCATIONS SEE ELEVATION

RECORD DRAWING 10/99

REGISTERED PROFESSIONAL ENGINEER STATE OF NEW MEXICO No. 3980 JOHN A. ANDREWS

ALBUQUERQUE METROPOLITAN ARROYO FLOOD CONTROL AUTHORITY AND BERNALILLO COUNTY OF PUBLIC WORKS

NORTH DOMINGO BACA ARROYO

TRAMWAY BOULEVARD TO TRAMWAY LANE

FENCE & GATE DETAILS

ANDREWS, ASBURY & ROBERT, INC.
CONSULTING ENGINEERS
ALBUQUERQUE NEW MEXICO

FILE No.	DRAWN	CHECKED	DATE	
94-688	ACE	PJG, JA	JAN. 1999	SHEET 11 OF 16

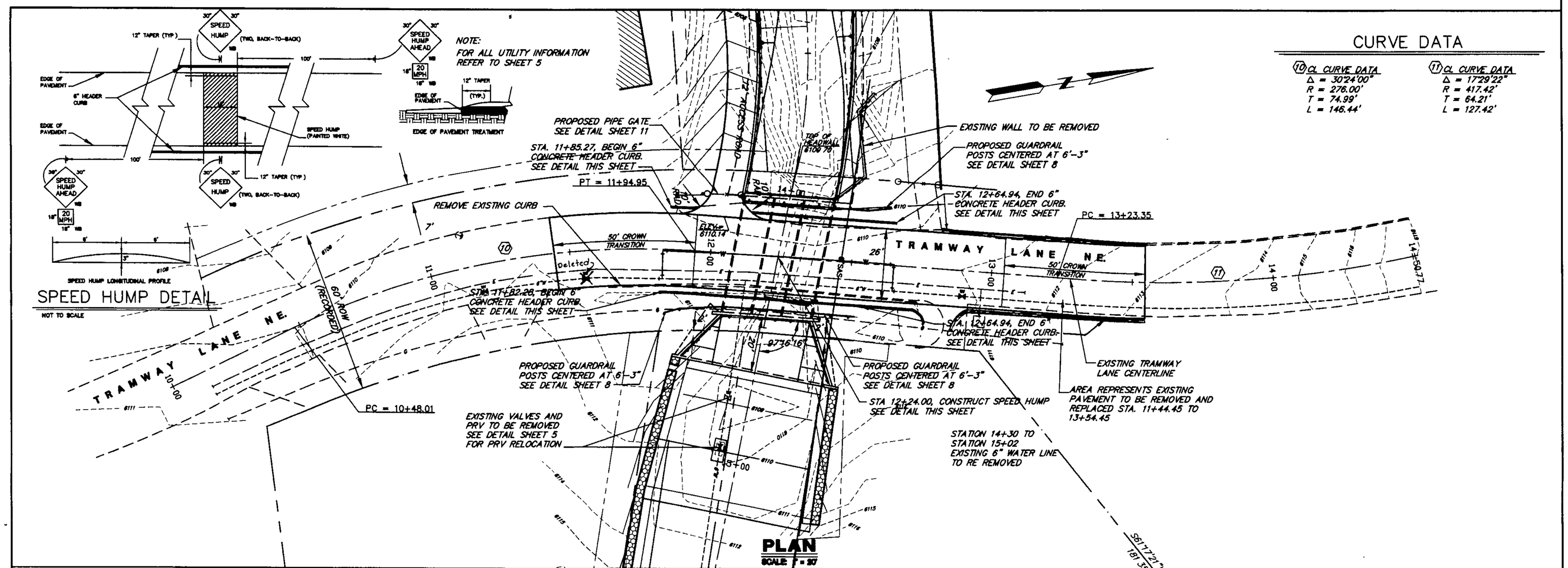

CURVE DATA

(10) CL CURVE DATA	(11) CL CURVE DATA
Δ = 30°24'00"	Δ = 17°29'22"
R = 276.00'	R = 417.42'
T = 74.99'	T = 64.21'
L = 146.44'	L = 127.42'

T R A M W A Y L A N E

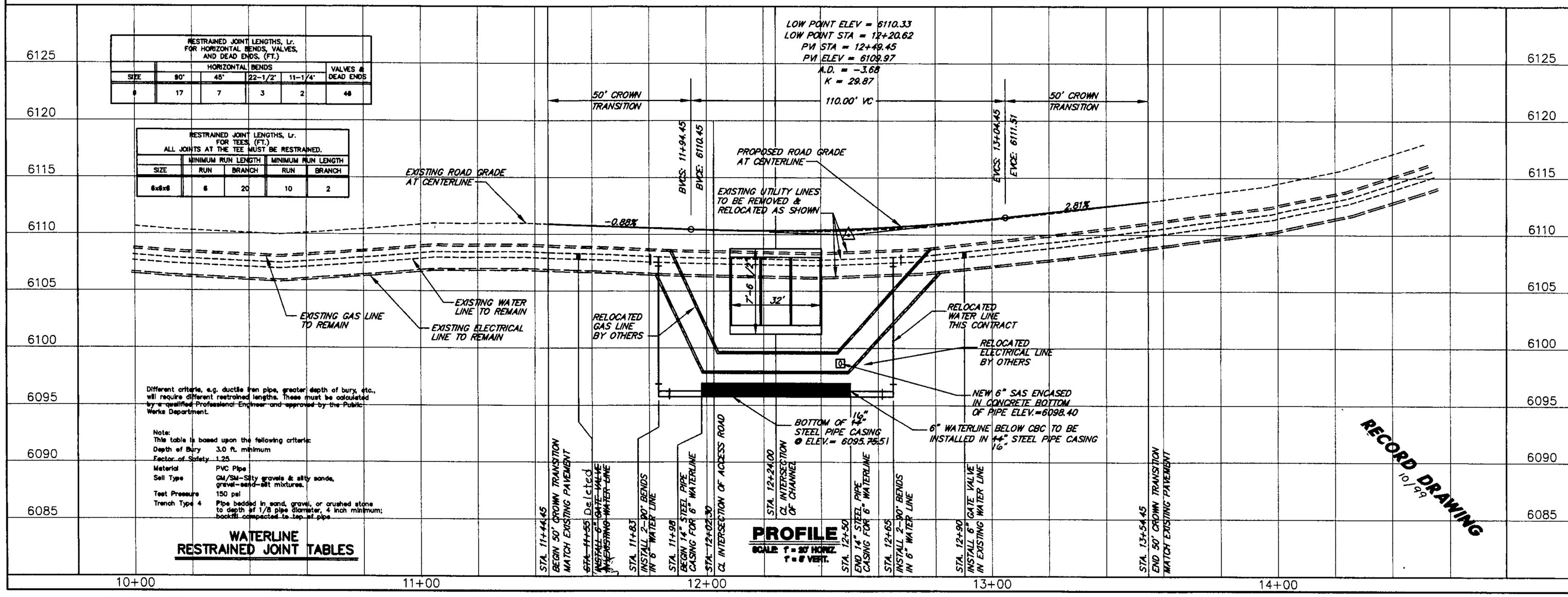

RESTRAINED JOINT LENGTHS, Lr. FOR HORIZONTAL BENDS, VALVES, AND DEAD ENDS. (FT.)					
	HORIZONTAL BENDS				VALVES & DEAD ENDS
SIZE	90°	45°	22-1/2°	11-1/4°	
6	17	7	3	2	48

RESTRAINED JOINT LENGTHS, Lr. FOR TEES, (FT.) ALL JOINTS AT THE TEE MUST BE RESTRAINED.				
	MINIMUM RUN LENGTH		MINIMUM RUN LENGTH	
SIZE	RUN	BRANCH	RUN	BRANCH
6x6x6	6	20	10	2

Different criteria, e.g. ductile iron pipe, greater depth of bury, etc., will require different restrained lengths. These must be calculated by a qualified Professional Engineer and approved by the Public Works Department.

Note:
This table is based upon the following criteria:

Depth of Bury	3.0 ft. minimum
Factor of Safety	1.25
Material	PVC Pipe
Soil Type	GM/SM-Silty gravels & silty sands, gravel-sand-silt mixtures.
Test Pressure	150 psi
Trench Type 4	Pipe bedded in sand, gravel, or crushed stone to depth of 1/8 pipe diameter, 4 inch minimum; backfill compacted to top of pipe

WATERLINE RESTRAINED JOINT TABLES

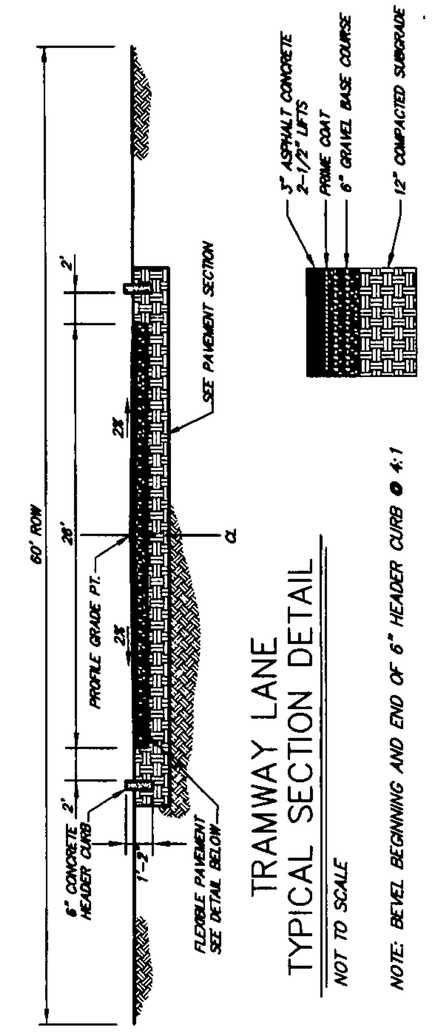

TRAMWAY LANE TYPICAL SECTION DETAIL

NOT TO SCALE

NOTE: BEVEL BEGINNING AND END OF 6" HEADER CURB @ 4:1

ASPHALT CONCRETE PAVEMENT SECTION DETAIL

NOT TO SCALE

LEGEND

- EXISTING PROPERTY LINE
- EXISTING EASEMENT LINE
- EXISTING 1' CONTOUR
- EXISTING 5' CONTOUR
- PROPOSED 1' CONTOUR
- PROPOSED 5' CONTOUR
- EXISTING EDGE OF PAVEMENT
- PROPOSED EDGE OF PAVEMENT
- EXISTING SANITARY SEWER LINE WITH MANHOLE
- PROPOSED SANITARY SEWER LINE WITH MANHOLE
- EXISTING WATER LINE WITH WATER VALVE
- PROPOSED WATER LINE WITH WATER VALVE
- EXISTING STORM DRAIN
- PROPOSED STORM DRAIN
- PROPOSED CHANNEL CENTERLINE
- EXISTING CONCRETE CHANNEL
- PROPOSED SHOTCRETE CHANNEL
- EXISTING UNDERGROUND ELECTRICAL LINE
- EXISTING GAS LINE
- EXISTING POWER POLE
- PROPOSED GABION DIKE
- EXISTING BUILDING
- PROPOSED PLACED BOULDERS
- HYDRAULIC GRADE LINE
- PROPOSED BOLDERS
- LIMITS OF PAVEMENT REMOVAL

REGISTERED PROFESSIONAL ENGINEER STATE OF NEW MEXICO JOHN A. ANDREWS

ALBUQUERQUE METROPOLITAN ARROYO FLOOD CONTROL AUTHORITY AND BERNALILLO COUNTY PUBLIC WORKS

NORTH DOMINGO BACA ARROYO

TRAMWAY BOULEVARD NE. TO TRAMWAY LANE NE.

PAVING & UTILITY PLAN & PROFILE TRAMWAY LANE NE.

ANDREWS, ASBURY & ROBERT, INC.
CONSULTING ENGINEERS
ALBUQUERQUE NEW MEXICO

FILE No.	DRAWN	CHECKED	DATE	SHEET	OF
94-688	ACE	PJG, JA	JAN. 1999	12	16

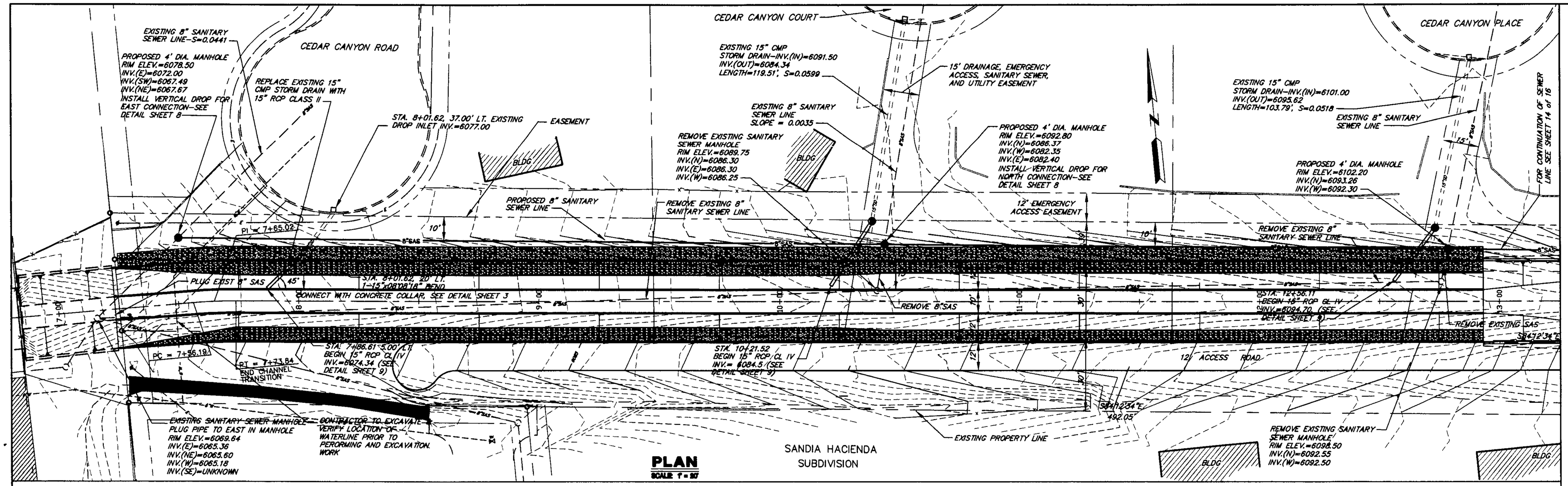

NORTH DOMINGO BACA ARROYO

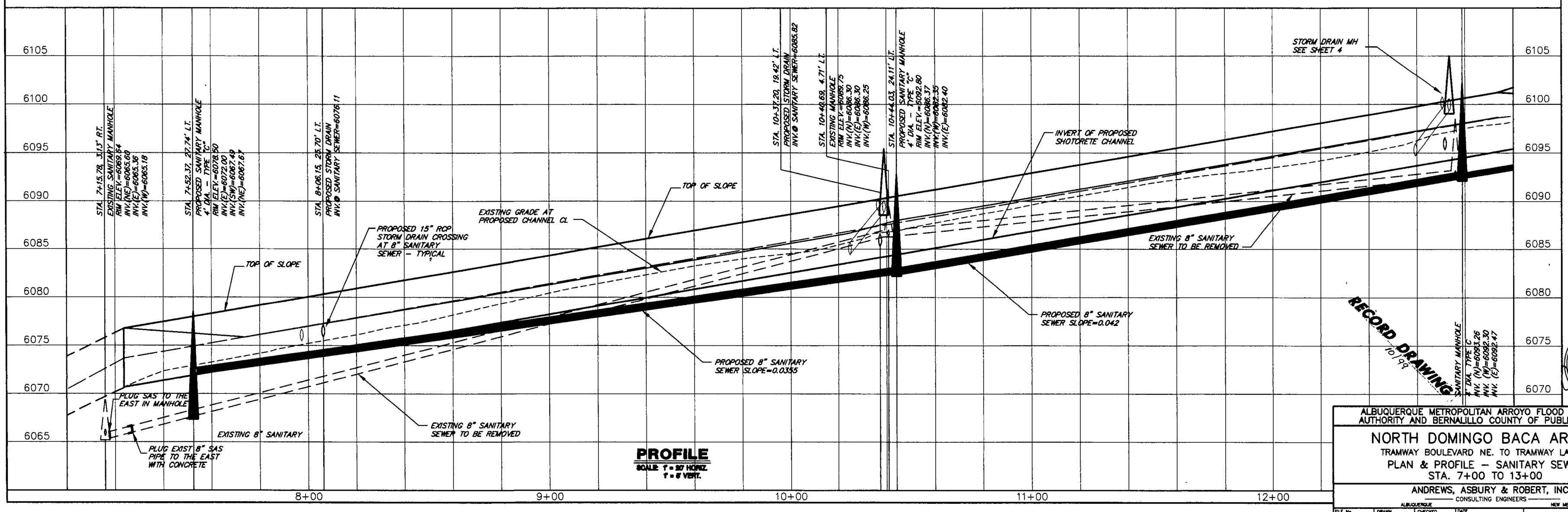

ALBUQUERQUE METROPOLITAN ARROYO FLOOD CONTROL AUTHORITY AND BERNALILLO COUNTY OF PUBLIC WORKS

NORTH DOMINGO BACA ARROYO

TRAMWAY BOULEVARD NE. TO TRAMWAY LANE NE.

PLAN & PROFILE – SANITARY SEWER

STA. 7+00 TO 13+00

ANDREWS, ASBURY & ROBERT, INC.
CONSULTING ENGINEERS
ALBUQUERQUE NEW MEXICO

FILE No.	DRAWN	CHECKED	DATE	SHEET
94-688	ACE	PGJ, JA	JAN. 1999	13 OF 16

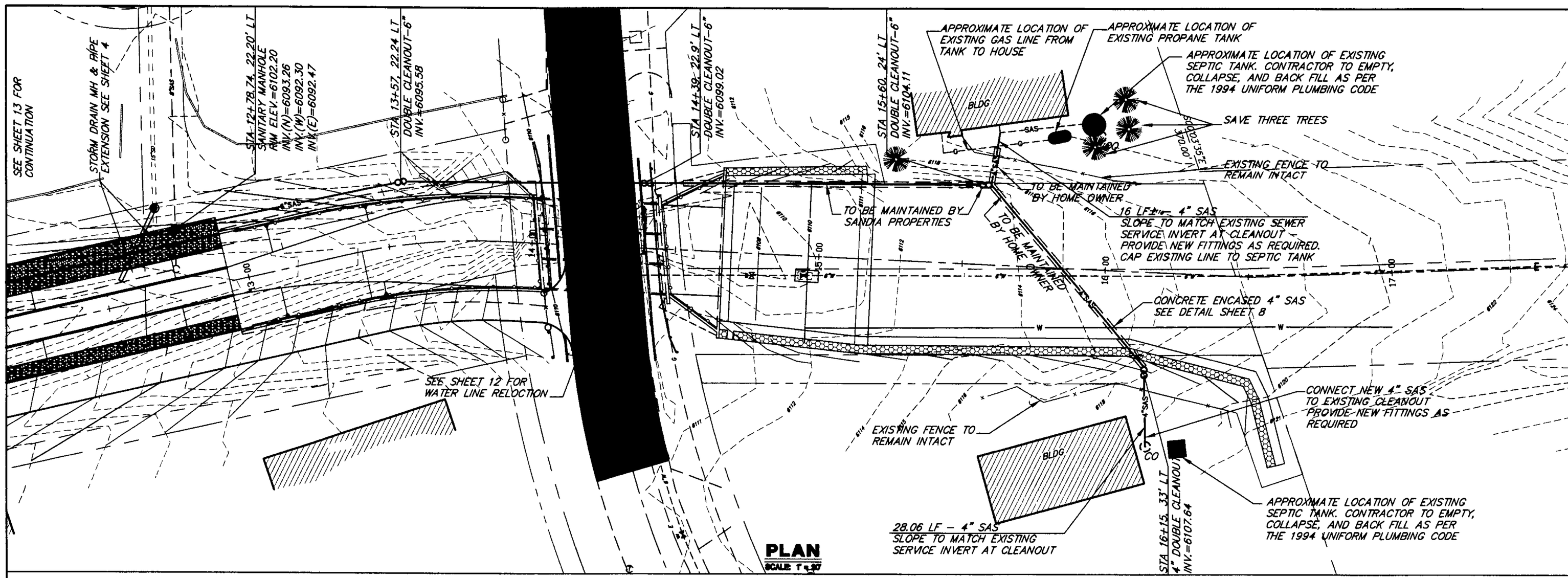

NORTH DOMINGO BACA ARROYO

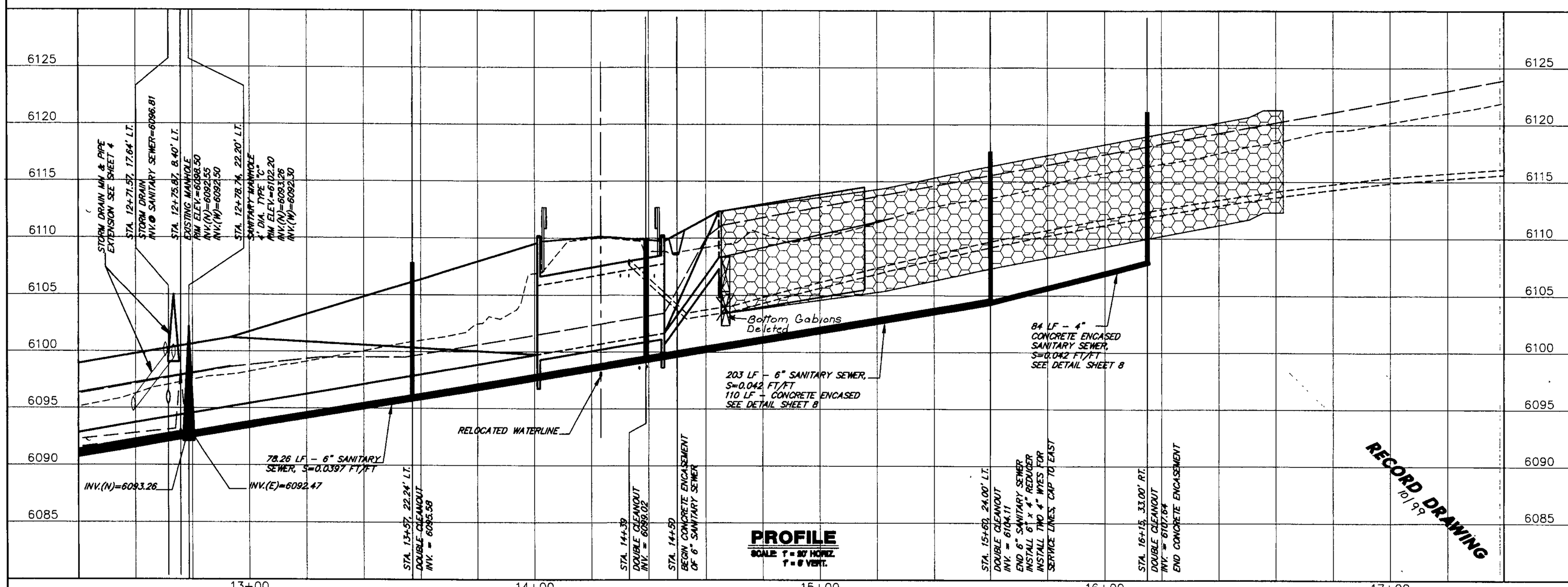

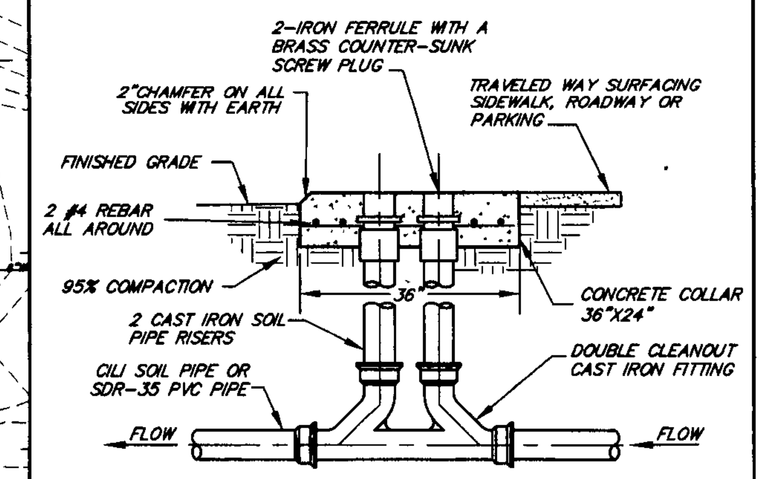

DOUBLE CLEANOUT DETAIL

NOT TO SCALE

NOTE:

CONTRACTOR SHALL COORDINATE SEWER SERVICE INTERRUPTION WITH EACH HOME OWNER.

SANITARY SEWER SERVICE SHALL NOT BE INTERRUPTED FOR MORE THAT TWO HOURS

LEGEND

- EXISTING PROPERTY LINE
- EXISTING EASEMENT LINE
- EXISTING 1' CONTOUR
- EXISTING 5' CONTOUR
- PROPOSED 1' CONTOUR
- PROPOSED 5' CONTOUR
- EXISTING EDGE OF PAVEMENT
- PROPOSED EDGE OF PAVEMENT
- EXISTING SANITARY SEWER LINE WITH MANHOLE
- PROPOSED SANITARY SEWER LINE WITH MANHOLE
- EXISTING WATER LINE WITH WATER VALVE
- PROPOSED WATER LINE WITH WATER VALVE
- EXISTING STORM DRAIN
- PROPOSED STORM DRAIN
- PROPOSED CHANNEL CENTERLINE
- EXISTING CONCRETE CHANNEL
- PROPOSED SHOTCRETE CHANNEL
- EXISTING UNDERGROUND ELECTRICAL L
- EXISTING GAS LINE
- EXISTING POWER POLE
- PROPOSED GABION DIKE
- EXISTING BUILDING
- PROPOSED PLACED BOULDERS
- HYDRAULIC GRADE LINE

REGISTERED PROFESSIONAL ENGINEER STATE OF NEW MEXICO 3960 JOHN A. ANDREWS

ALBUQUERQUE METROPOLITAN ARROYO FLOOD CONTROL AUTHORITY AND BERNALILLO COUNTY OF PUBLIC WORKS

NORTH DOMINGO BACA ARROYO

TRAMWAY BOULEVARD NE. TO TRAMWAY LANE NE.

PLAN & PROFILE – SANITARY SEWER

STA. 13+00 TO 17+00

ANDREWS, ASBURY & ROBERT, INC.

CONSULTING ENGINEERS

ALBUQUERQUE NEW MEXICO

FILE No.	DRAWN	CHECKED	DATE	
94-688	ACE	PGJ, JA	JAN. 1999	SHEET 14 OF 16

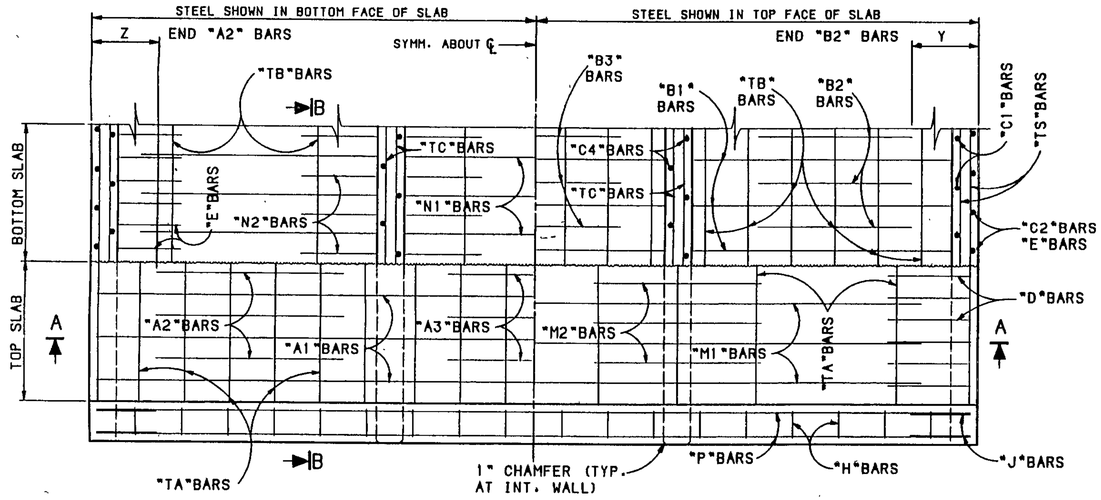

PART PLAN AND PART SECTION C-C

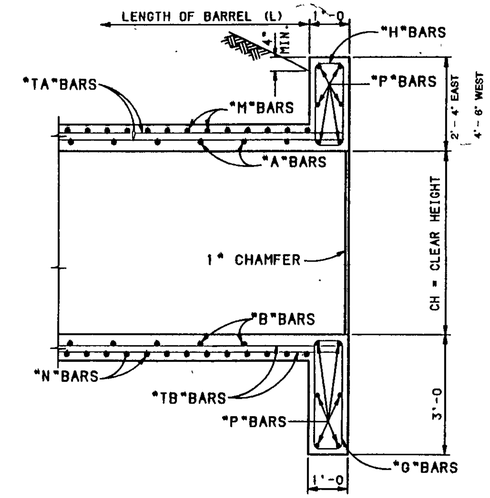

PART SECTION B-B

GENERAL NOTES

1. ALL CONCRETE SHALL BE CLASS "A". CHAMFER ALL THE EXPOSED EDGES 3/4".
2. ⚠ ALL REINFORCING STEEL TO BE DEFORMED BARS, CONFORMING TO AASHTO M-31, GRADE 60. ALL DIMENSIONS REFER TO THE CENTERLINE OF BAR.
3. WHEN NECESSARY, "T" BARS MAY BE SPLICED BY LAPPING AT LEAST 20 BAR DIAMETERS. PAY WEIGHT FOR REINFORCING STEEL DOES NOT INCLUDE SPLICES. THE COST OF THE SPLICE MATERIAL IS TO BE INCLUDED IN THE UNIT PRICE BID FOR REINFORCING STEEL.
4. VOLUME OF CONCRETE = (L) x (CONCRETE QUANTITY/LIN. FT.) PLUS CONCRETE AT ENDS.
5. WEIGHT OF REINFORCING STEEL = (L) x (WEIGHT OF REINF./LIN.FT.) PLUS WEIGHT AT ENDS.
6. PLACE "TA" BARS ON "A" BARS AND "TB" BARS UNDER "B" BARS, SPACED AS SHOWN IN THE TABLE; THE REMAINING "TA" BARS, AND "TB" BARS ARE TO BE PLACED ADJACENT TO THE "D", "E", "M", AND "N" BARS AS INDICATED IN "SECTION A-A", AT 2'-0 MAX.
7. PLACE "TS" BARS NEXT TO "C1" BARS, SPACED AS SHOWN IN THE TABLE; THE REMAINING "TS" BARS SHALL BE PLACED IN SIDEWALL NEXT TO "C2", "D", AND "E" BARS. WHEN "C1" BARS ARE NOT REQUIRED, PLACE ALL "TS" BARS NEXT TO "C2", "D", AND "E" BARS.
8. PLACE "A1", "A3", "B1", "B3", "M1", AND "N1" BARS SYMMETRICAL TO THE CENTERLINE OF THE BOX. PLACE "M2" AND "N2" BARS SYMMETRICAL TO THE CENTERLINE OF THE WALLS.
9. "COVER" IS HEIGHT OF FILL FROM TOP OF THE BOX TO THE FINISHED GRADE.

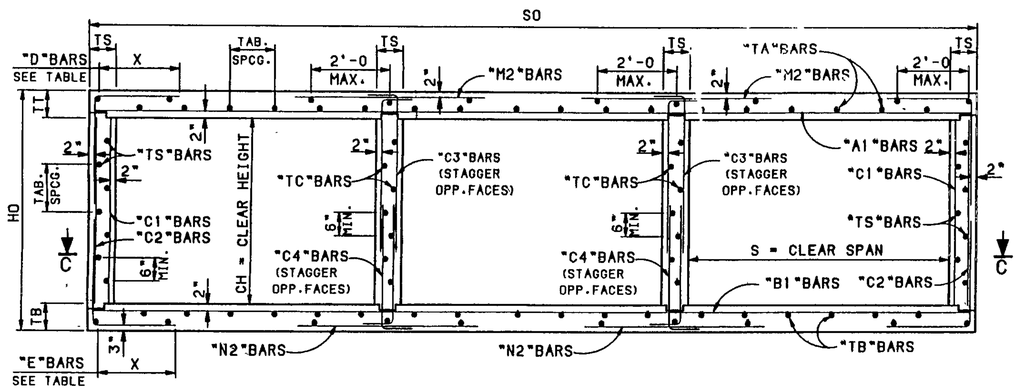

SECTION A-A

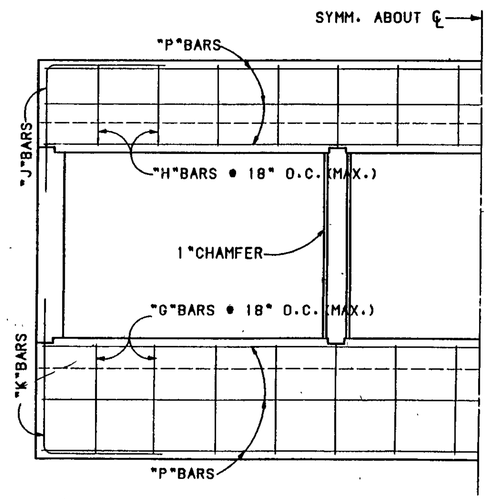

PART END ELEVATION

DESIGN DATA

DESIGN ACCORDING TO A.A.S.H.O. SPECIFICATIONS, 1957.
LIVE LOAD: H20-S16-44 & INTERSTATE ALTERNATE LOADING
WEIGHT OF FILL ON TOP OF BOX: 84#/CU.FT.
HORIZONTAL EARTH PRESSURE: 30#/CU.FT., 2' SURCHARGE
DESIGN STRESSES: f'c = 3000 psi, fc = 1200 psi.
fs = 20,000 psi, n = 10.

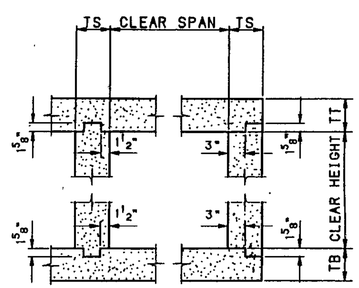

CONSTRUCTION JOINT DETAIL

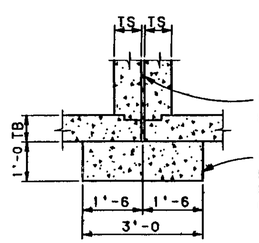

½" PREFORMED BITUMINOUS JOINT FILLER SHALL BE USED BETWEEN ADJACENT UNITS AND IT SHALL EXTEND BETWEEN BARRELS, PARAPETS, AND CUT-OFF WALLS.

THE FOUNDATION BLOCK SHALL BE PLACED IN NEAT EXCAVATION AND EXTENDED FOR THE ENTIRE LENGTH OF BARREL UNDER JOINT BETWEEN UNITS. PLACE ONE LAYER OF TAR PAPER OVER THE ENTIRE TOP SURFACE OF THE FOUNDATION BLOCK. CONCRETE QUANTITY = 0.111 CU. YDS. PER LIN. FT. OF BLOCK.

JOINT DETAIL FOR MULTIPLE UNIT BOXES

RECORD DRAWING 10/99

NO.	DESCRIPTION	DATE	BY
6			
5			
4			
3			
2			
1	REVISED NOTE #2	6-8-94	PH

REVISIONS (OR CHANGE NOTICES)

NEW MEXICO STATE HIGHWAY AND TRANSPORTATION DEPARTMENT

CONCRETE BOX CULVERT BARRELS
TRIPLE OPENING - NORMAL
ALL DESIGNS

GENERAL DATA

LAYOUT BY / DRAWN BY / CHECKED BY
APPROVAL RECOMMENDED — BRIDGE ENGINEER — DATE 11/9/93
APPROVED — DIRECTOR HIGHWAY DIVISION — DATE 2-22-94

SERIAL CB-33 SHEET 15 OF 16

DESIGNED BY: H.T. 10/60 CHECKED BY: S.J.M. 10/93
DETAILED BY: J.A.K. 10/93 CHECKED BY: 10/93
PLOT DATE: 10/28/93

BRIDGE#1/STANDARDS/BRIDGE/STANDARDS$16

N. M. P. ..... SHEET .....

CLEAR SPAN	CLEAR HEIGHT	DIMENSIONS TT	TS	TB	SO	HO	Y	Z	QUANTITIES PER L.F. OF BARREL: REINFORCING STEEL POUNDS PER L.F.	CONCRETE CU. YDS. PER L.F.	AT ONE END ✱: REINFORCING STEEL POUNDS	CONCRETE CU. YDS.
4	2	7"	6"	6½"	14'-0	3'-1½	----	----	115.8	0.731	337	2.91
	3	7"	6"	6½"	14'-0	4'-1½	----	----	122.8	0.806	347	2.99
	4	7"	6"	6½"	14'-0	5'-1½	----	----	124.3	0.880	355	3.06
6	2	7½"	6"	7"	20'-0	3'-2½	1'-0	2"	185.4	1.043	472	4.10
	3	7½"	6"	7"	20'-0	4'-2½	1'-0	2"	191.0	1.117	460	4.17
	4	7½"	6"	7"	20'-0	5'-2½	1'-0	2"	197.6	1.191	493	4.25
	5	7½"	6"	7"	20'-0	6'-2½	1'-0	2"	210.4	1.285	505	4.32
	6	7½"	6"	7"	20'-0	7'-2½	1'-0	2"	227.9	1.339	550	4.40
8	4	8"	6"	8½"	26'-0	5'-4½	1'-0	2"	292.4	1.620	790	5.43
	5	8"	6"	8½"	26'-0	6'-4½	1'-0	2"	314.7	1.694	804	5.51
	6	8"	6"	8½"	26'-0	7'-4½	1'-0	2"	333.4	1.769	816	5.59
	7	8"	7"	8½"	26'-4	8'-4½	1'-0	2"	347.3	1.946	882	5.82
	8	8"	8"	8½"	26'-8	9'-4½	1'-0	2"	359.3	2.148	905	6.07
10	4	9"	6½"	9½"	32'-2	5'-6½	1'-3	2"	370.3	2.158	1144	6.68
	5	9"	6½"	9½"	32'-2	6'-6½	1'-3	2"	382.5	2.238	1157	6.76
	7	9"	7"	9½"	32'-4	8'-6½	1'-3	2"	411.6	2.451	1223	7.00
	8	9"	8"	9½"	32'-8	9'-6½	1'-3	2"	430.0	2.655	1262	7.26
	9	9"	8"	10"	32'-8	10'-7	1'-3	2"	455.1	2.804	1294	7.37
	10	9"	9"	10"	33'-0	11'-7	1'-3	-2"-	466.0	3.046	1318	7.66
	11	9"	9"	10"	33'-0	12'-7	1'-3	2"	487.3	3.157	1338	7.82
	12	9"	9"	10"	33'-0	13'-7	1'-3	2"	516.1	3.268	1363	8.00
12	6	10"	6½"	11"	38'-2	7'-9	2"	2"	480.7	2.955	1720	8.02
	8	10"	8"	11"	38'-8	9'-9	2"	2"	524.6	3.296	1803	8.44
	10	10"	9"	11"	39'-0	11'-9	2"	2"	574.9	3.639	1834	8.85
	12	10"	9"	11"	39'-0	13'-9	2"	2"	609.6	3.861	1898	9.18
14	8	11½"	8"	12"	44'-8	9'-11½	2"	2"	711.1	4.030	2464	9.63
	10	11½"	9"	12"	45'-0	11'-11½	2"	2"	730.2	4.375	2519	10.03
	12	11½"	9"	12½"	45'-0	14'-0	2"	2"	809.9	4.667	2521	10.37
	14	11½"	10"	12½"	45'-4	16'-0	2"	2"	846.8	5.086	2646	10.96

REINFORCING BARS

CLEAR SPAN	CLEAR HEIGHT	"A" BARS A1 SIZE	A1 LENGTH	A2 SIZE	A2 LENGTH	A3 SIZE	A3 LENGTH	SPACING	"B" BARS B1 SIZE	B1 LENGTH	B2 SIZE	B2 LENGTH	B3 SIZE	B3 LENGTH	SPACING
4	2	#5	13'-9	--	NONE	--	NONE	6"	#4	13'-9	--	NONE	--	NONE	12"
	3	#5	13'-9	--	NONE	--	NONE	6"	#4	13'-9	--	NONE	--	NONE	12"
	4	#5	13'-9	--	NONE	--	NONE	6"	#4	13'-9	--	NONE	--	NONE	13"
6	2	#5	18'-6	#6	5'-9	#5	5'-0	12"	#4	19'-9	#4	5'-0	--	NONE	14"
	3	#5	18'-6	#6	5'-9	#5	5'-0	12"	#4	19'-9	#4	5'-0	--	NONE	14"
	4	#5	18'-6	#6	5'-9	#5	5'-0	12"	#4	19'-9	#4	5'-0	--	NONE	14"
	5	#5	18'-6	#6	5'-9	#5	5'-6	12"	#4	19'-9	#4	5'-6	--	NONE	13"
	6	#5	18'-6	#6	5'-9	#5	5'-9	11"	#4	19'-9	#4	5'-9	--	NONE	12"
8	4	#5	25'-9	#7	7'-9	#6	6'-3	12"	#4	25'-9	#4	6'-6	--	NONE	11"
	5	#5	25'-9	#7	7'-9	#6	6'-3	12"	#4	25'-9	#4	6'-6	--	NONE	10½"
	6	#5	25'-9	#7	7'-9	#6	6'-3	11½"	#4	25'-9	#4	6'-6	--	NONE	10"
	7	#5	26'-0	#7	8'-0	#6	6'-6	12"	#5	26'-0	#4	6'-6	--	NONE	14"
	8	#5	26'-3	#8	8'-0	#7	6'-6	15"	#5	26'-3	#4	6'-6	--	NONE	14"
10	4	#6	29'-6	#6	9'-6	#5	7'-3	12"	#4	32'-0	#4	6'-9	--	NONE	9"
	5	#6	29'-6	#6	9'-6	#5	7'-6	12"	#4	32'-0	#4	7'-0	--	NONE	9"
	7	#6	30'-0	#6	9'-6	#5	8'-0	12"	#5	32'-0	#5	7'-0	--	NONE	14"
	8	#6	30'-3	#6	9'-6	#5	8'-0	12"	#5	32'-3	#4	7'-0	--	NONE	12"
	9	#6	30'-3	#6	9'-6	#5	8'-0	12"	#5	32'-3	#4	7'-0	--	NONE	12"
	10	#6	30'-6	#6	9'-6	#5	8'-0	12"	#5	32'-9	#4	7'-0	--	NONE	12"
	11	#6	30'-6	#6	9'-6	#5	8'-0	12"	#5	32'-9	#4	7'-0	--	NONE	11½"
	12	#6	30'-6	#5	9'-6	#5	8'-0	11"	#5	32'-9	#4	7'-0	--	NONE	11"
12	6	#5	33'-0	#8	11'-9	#7	10'-0	14"	#4	30'-6	#7	11'-6	#4	6'-0	14"
	8	#5	32'-6	#8	13'-0	#7	10'-3	14"	#4	30'-6	#7	11'-6	#4	6'-3	14"
	10	#5	32'-0	#8	13'-0	#7	10'-6	14"	#4	30'-9	#7	11'-6	#5	6'-6	14"
	12	#5	31'-9	#8	13'-0	#7	10'-6	14"	#4	30'-9	#7	11'-6	#5	6'-9	14"
14	8	#5	40'-0	#6	13'-0	#5	10'-6	9"	#5	40'-0	#5	12'-0	--	NONE	9"
	10	#5	40'-0	#6	13'-3	#5	10'-9	9"	#5	40'-0	#5	12'-0	--	NONE	9"
	12	#5	39'-9	#6	13'-6	#5	11'-0	9"	#6	40'-0	#5	12'-0	--	NONE	12"
	14	#5	39'-6	#6	14'-0	#5	11'-3	9"	#6	40'-0	#5	12'-0	--	NONE	10½"

CLEAR SPAN	CLEAR HEIGHT	"C" BARS C1 SIZE	C1 SPACING	C2 SIZE	C2 SPACING	C3 SIZE	C3 LENGTH	C4 LENGTH	SPACING	"M" BARS M1 SIZE	M1 LENGTH	M2 SIZE	M2 LENGTH	SPACING
4	2	NONE		NONE		#4	2'-3	2'-3	12"	#4	12'-6	#4	3'-9	12"
	3	NONE		NONE		#4	2'-9	2'-9	12"	#4	12'-6	#4	3'-9	12"
	4	NONE		NONE		#4	3'-3	3'-3	13"	#4	12'-6	#4	3'-9	13"
6	2	NONE		NONE		#4	2'-3	2'-3	9"	#4	18'-6	#6	5'-0	18"
	3	NONE		NONE		#4	2'-9	2'-9	9"	#4	18'-6	#6	5'-0	18"
	4	NONE		NONE		#4	3'-3	3'-3	9"	#4	18'-6	#6	5'-0	18"
	5	NONE		NONE		#4	4'-3	3'-3	9"	#4	18'-6	#6	5'-3	18"
	6	NONE		NONE		#4	5'-3	3'-3	9"	#4	18'-6	#6	5'-6	18"
8	4	NONE		NONE		#5	4'-3	3'-0	10"	#4	24'-0	#6	6'-3	12"
	5	NONE		NONE		#5	5'-3	3'-0	10"	#4	25'-6	#6	6'-9	12"
	6	NONE		NONE		#5	6'-3	3'-0	10"	#4	25'-6	#6	7'-9	12"
	7	#4	18"	NONE		#5	7'-3	3'-0	12"	#4	25'-6	#6	8'-6	12"
	8	#4	18"	#5	13"	#5	8'-3	3'-0	14"	#4	25'-6	#7	9'-6	13"
10	4	NONE		NONE		#5	4'-3	3'-0	10½"	#5	30'-0	#6	7'-0	10½"
	5	NONE		NONE		#5	5'-0	3'-3	10½"	#5	30'-0	#6	7'-0	10½"
	7	NONE		NONE		#5	7'-3	3'-0	12"	#5	30'-0	#7	7'-3	12"
	8	NONE		#5	13"	#5	8'-3	3'-0	12"	#5	29'-6	#7	7'-3	12"
	9	#4	13"	#5	13"	#5	9'-3	3'-0	12"	#5	29'-0	#7	7'-3	12"
	10	#4	13"	#5	12"	#5	10'-3	3'-0	15"	#5	28'-9	#7	7'-3	12"
	11	#4	12"	#5	12"	#5	11'-3	3'-0	15"	#5	28'-9	#7	7'-3	12"
	12	#4	14"	#5	11"	#5	12'-3	3'-0	11"	#4	28'-9	#7	7'-3	11"
12	6	NONE		NONE		#5	6'-0	3'-6	12"	#5	37'-3	#8	7'-6	12"
	8	#4	18"	#6	15"	#5	8'-0	3'-6	12"	#5	37'-3	#8	7'-6	12"
	10	#4	15"	#6	12"	#5	10'-0	3'-6	12"	#5	37'-0	#8	7'-6	12"
	12	#5	18"	#6	12"	#5	12'-0	3'-6	12"	#5	36'-9	#8	7'-6	12"
14	8	#4	18"	NONE		#6	8'-9	3'-6	15"	#6	40'-0	#8	8'-3	12"
	10	#4	18"	#5	11"	#6	10'-9	3'-6	11"	#5	40'-0	#8	8'-3	11"
	12	#4	12"	#5	9"	#6	12'-9	3'-6	9"	#5	40'-0	#7	8'-3	9"
	14	#5	12"	#6	10½"	#6	14'-9	3'-6	10½"	#5	40'-0	#8	8'-3	10½"

CLEAR SPAN	CLEAR HEIGHT	"N" BARS N1 SIZE	N1 LENGTH	N2 SIZE	N2 LENGTH	SPACING	"D" SIZE	LENGTH	"X"	SPACING	"E" SIZE	LENGTH	"X"	SPACING
4	2	#4	12'-6	#4	3'-3	18"	#5	3'-6	1'-6	12"	#4	3'-6	1'-6	12"
	3	#4	12'-6	#4	3'-3	18"	#5	4'-0	1'-6	12"	#4	4'-0	1'-6	12"
	4	#4	12'-6	#4	3'-3	18"	#5	4'-6	1'-6	13"	#4	4'-6	1'-6	13"
6	2	#4	18'-6	#6	7'-0	12"	#6	3'-9	1'-6	13"	#5	3'-6	1'-6	15"
	3	#4	18'-6	#6	7'-0	12"	#5	4'-3	1'-6	12"	#4	4'-0	1'-6	12"
	4	#4	18'-6	#6	7'-0	12"	#6	5'-0	1'-6	18"	#5	4'-3	1'-6	18"
	5	#4	18'-6	#6	7'-0	13"	#6	5'-6	1'-6	15"	#5	4'-6	1'-6	15"
	6	#4	18'-6	#6	7'-3	14"	#7	6'-3	1'-6	18"	#6	5'-0	1'-6	18"
8	4	#4	24'-0	#6	6'-0	11"	#6	4'-3	1'-6	11"	#5	5'-3	1'-6	11"
	5	#4	25'-6	#6	6'-9	10½"	#6	4'-8	1'-6	10½"	#5	6'-0	1'-6	10½"
	6	#4	25'-6	#6	7'-9	11"	#6	5'-6	1'-6	10½"	#5	5'-6	1'-6	10½"
	7	#4	25'-6	#7	8'-6	14"	#7	6'-9	1'-6	14"	#6	5'-6	1'-6	14"
	8	#4	25'-6	#7	9'-6	13"	#7	4'-6	1'-6	13"	#6	4'-3	1'-6	13"
10	4	#5	30'-0	#6	6'-0	10½"	#6	4'-3	1'-6	10"	#5	5'-3	1'-6	10"
	5	#5	30'-0	#6	6'-0	10½"	#6	4'-6	1'-6	10"	#5	6'-0	1'-6	10"
	7	#5	30'-0	#7	6'-3	12"	#7	6'-9	1'-9	12"	#6	6'-9	1'-9	12"
	8	#5	29'-6	#7	6'-3	12"	#7	6'-0	2'-3	12"	#7	6'-0	2'-3	15"
	9	#5	28'-3	#7	6'-6	12"	#7	6'-3	2'-6	12"	#7	6'-6	2'-9	15"
	10	#5	27'-9	#7	6'-6	12"	#7	6'-6	2'-9	12"	#7	7'-0	3'-3	12"
	11	#5	27'-9	#7	6'-9	12"	#7	6'-6	2'-9	12"	#7	7'-0	3'-3	12"
	12	#4	27'-3	#7	6'-9	11"	#7	6'-6	2'-9	11"	#7	7'-3	3'-6	11"
12	6	#4	37'-3	#8	5'-9	12"	#8	5'-6	1'-6	13"	#7	6'-0	1'-6	13"
	8	#4	37'-3	#8	6'-0	12"	#8	4'-9	1'-8	15"	#8	4'-9	1'-8	15"
	10	#4	37'-3	#8	6'-0	12"	#8	5'-0	1'-11	12"	#7	5'-0	1'-11	12"
	12	#5	36'-9	#8	6'-0	12"	#8	5'-3	2'-2	12"	#8	5'-3	2'-2	12"
14	8	#7	40'-0	#8	7'-3	12"	#8	9'-6	3'-0	12"	#7	8'-3	3'-3	12"
	10	#6	40'-0	#8	7'-3	11"	#8	8'-0	3'-3	11"	#7	8'-0	3'-3	11"
	12	#5	40'-0	#7	7'-3	9"	#7	7'-0	3'-3	9"	#7	7'-3	3'-3	9"
	14	#5	40'-0	#8	7'-3	10½"	#8	7'-0	3'-3	10½"	#8	7'-0	3'-3	10½"

CLEAR SPAN	CLEAR HEIGHT	"TA" NO.	SIZE	SPACING	"TB" NO.	SIZE	SPACING	"TC" NO.	SIZE	SPACING	"TS" NO.	SIZE	SPACING	G.H NO. OF EA. AT 1 END
4	2	19	#4	16"	19	#4	16"	6	#4	18"	4	#4	18"	9
	3	19	#4	16"	19	#4	16"	8	#4	18"	6	#4	15"	9
	4	19	#4	16"	19	#4	16"	10	#4	18"	6	#4	18"	9
6	2	31	#4	16"	25	#4	18"	6	#4	18"	4	#4	18"	12
	3	31	#4	16"	25	#4	18"	8	#4	18"	6	#4	15"	12
	4	31	#4	16"	25	#4	18"	10	#4	18"	6	#4	18"	12
	5	31	#4	16"	25	#4	18"	14	#4	18"	8	#4	18"	12
	6	31	#4	16"	25	#4	18"	16	#4	18"	10	#4	15"	12
8	4	43	#4	14"	34	#4	16"	10	#4	18"	6	#4	18"	18
	5	43	#4	14"	34	#4	16"	14	#4	18"	8	#4	16"	18
	6	43	#4	14"	34	#4	16"	16	#4	18"	10	#4	15"	18
	7	40	#4	17"	34	#4	16"	18	#4	18"	18	#4	18"	18
	8	37	#4	16"	34	#4	16"	22	#4	18"	22	#4	18"	18
10	4	49	#4	16"	43	#4	18"	10	#4	18"	6	#4	18"	21
	5	49	#4	16"	43	#4	18"	14	#4	18"	8	#4	16"	21
	7	[illegible]	[illegible]	[illegible]	[illegible]	[illegible]	[illegible]	[illegible]	[illegible]	[illegible]	[illegible]	[illegible]	[illegible]	[illegible]
	8	49	#4	16"	43	#4	18"	18	#4	18"	10	#4	18"	21
	9	49	#4	16"	43	#4	18"	22	#4	18"	12	#4	17"	21
	10	49	#4	16"	43	#4	18"	24	#4	18"	24	#4	18"	21
	11	49	#4	16"	43	#4	18"	26	#4	18"	26	#4	18"	21
	12	49	#4	16"	46	#4	18"	30	#4	18"	30	#4	18"	21
12	6	64	#4	15"	52	#4	18"	16	#4	18"	10	#4	15"	24
	8	64	#4	15"	52	#4	18"	22	#4	18"	22	#4	18"	24
	10	64	#4	15"	52	#4	18"	26	#4	18"	26	#4	18"	24
	12	61	#4	15"	52	#4	18"	32	#4	18"	32	#4	18"	24
14	8	79	#4	13"	64	#4	16"	22	#4	18"	22	#4	18"	30
	10	79	#4	13"	64	#4	16"	26	#4	18"	26	#4	18"	30
	12	79	#4	13"	64	#4	16"	32	#4	18"	32	#4	18"	30
	14	79	#4	13"	64	#4	16"	38	#4	18"	38	#4	18"	30

✱ NOTE: QUANTITIES "AT ONE END" INCLUDE PARAPET, CUT-OFF WALL, AND BARREL BEYOND LENGTH "L". WINGWALL QUANTITIES ARE NOT INCLUDED.

"P" BARS

CLEAR SPAN	4'	6'	8'	10'	12'	14'
SIZE	#5	#5	#6	#7	#8	#9

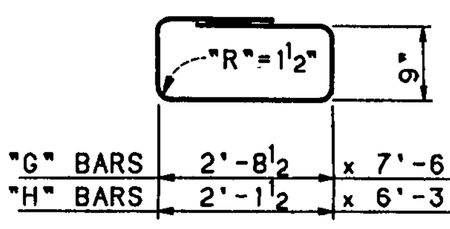

"G" BARS	2'-8½	x 7'-6 LG.
"H" BARS	2'-1½	x 6'-3 LG.

"A", "B", "M", & "N"	SEE TABLE
"C1" & "C2"	"CH" MINUS 3"
"T" BARS	"L"+(10½" EA.END)
"P" BARS	"SO" MINUS 3"

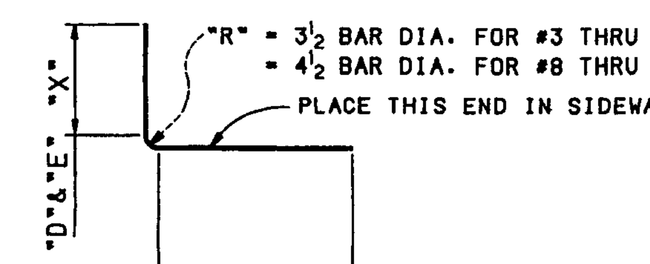

"J" BARS	"CH"+1'-9	"H"+4'-0 LG.
"K" BARS	4'-6	6'-9 LG.

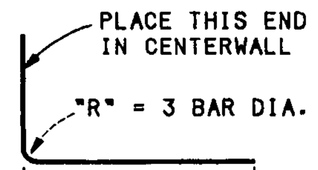

"C3" & "C4"	12 BAR DIA.

NOTE: "J" BARS ARE THE SAME SIZE AS "D" BARS.
"K" BARS ARE THE SAME SIZE AS "E" BARS.

REINFORCING STEEL DIAGRAM

NUMBER OF BARS REQUIRED

"A1", "A3", "B1", "B3", "M1", & "N1" BARS: 12L ÷ SPACING
"A2", "B2", "C2", "D", "E", "M2", & "N2" BARS: 24L ÷ SPACING
"P" BARS: 12 FOR CUT-OFF & PARAPET AT EACH END
"C1" BARS: (24L ÷ SPACING) PLUS
2 AT EACH END
"C3" & "C4" BARS: (48L ÷ SPACING) PLUS
4 AT EACH END
"J" & "K" BARS: 4 OF EACH AT EACH END
(FOR PARAPET AND CUT-OFF WALL)
OTHER BARS: SEE TABLE
"L" = LENGTH OF BARREL IN FEET
"CH" = CLEAR HEIGHT

RECORD DRAWING 10/99

NOTE: REFER TO SERIAL CB-33 SHEET 1 OF 5 FOR CONCRETE BOX CULVERT DETAILS, DESIGN DATA, AND GENERAL NOTES.

NO.	DESCRIPTION	DATE	BY
6			
5			
4			
3			
2			
1			

REVISIONS (OR CHANGE NOTICES)

NEW MEXICO STATE HIGHWAY AND TRANSPORTATION DEPARTMENT

CONCRETE BOX CULVERT BARRELS
TRIPLE OPENING - NORMAL
DESIGN No. 1
0' TO 5' COVER

LAYOUT BY / DRAWN BY / CHECKED BY — APPROVAL RECOMMENDED: DRIVE ENGINEER — DATE 1/4/94
APPROVED: ROAD BUREAU ENGR — DATE 2-22-94

SERIAL CB-33 SHEET 16 OF 16

DESIGNED BY: H.T. 1/61 CHECKED BY: S.J.M. 10/93
DETAILED BY: J.A.K. 10/93 CHECKED BY: R.A. 10/93
PLOT DATE: 10/28/93

BRIDGE#1/STANDARDS/BRIDGE/STANDARDS$16A

N. M. P. ..... SHEET.....

ELEVATION REFERENCE MARKS

REFERENCE MARK	ELEVATION (FEET NGVD)	DESCRIPTION OF LOCATION
RM19	6062.97	A 1"-diameter iron pipe anchored in a mound of concrete, with no stampings, projecting about 0.2', located 105' east of the centerline of Tramway Boulevard, 800' south of Live Oak Road, and 1' west of a 7'-tall sawed-off power pole.
RM32	6009.16	United States Coast and Geodetic Survey (USC & GS) standard brass tablet, stamped "Tumble, 1969", set in top of a concrete post projecting about 0.2', located 930' west of Tramway Road, about 45' north of San Antonio Drive, 90' east of a guy wire, and 116' northeast of the north power pole of pylon No. ER/45.

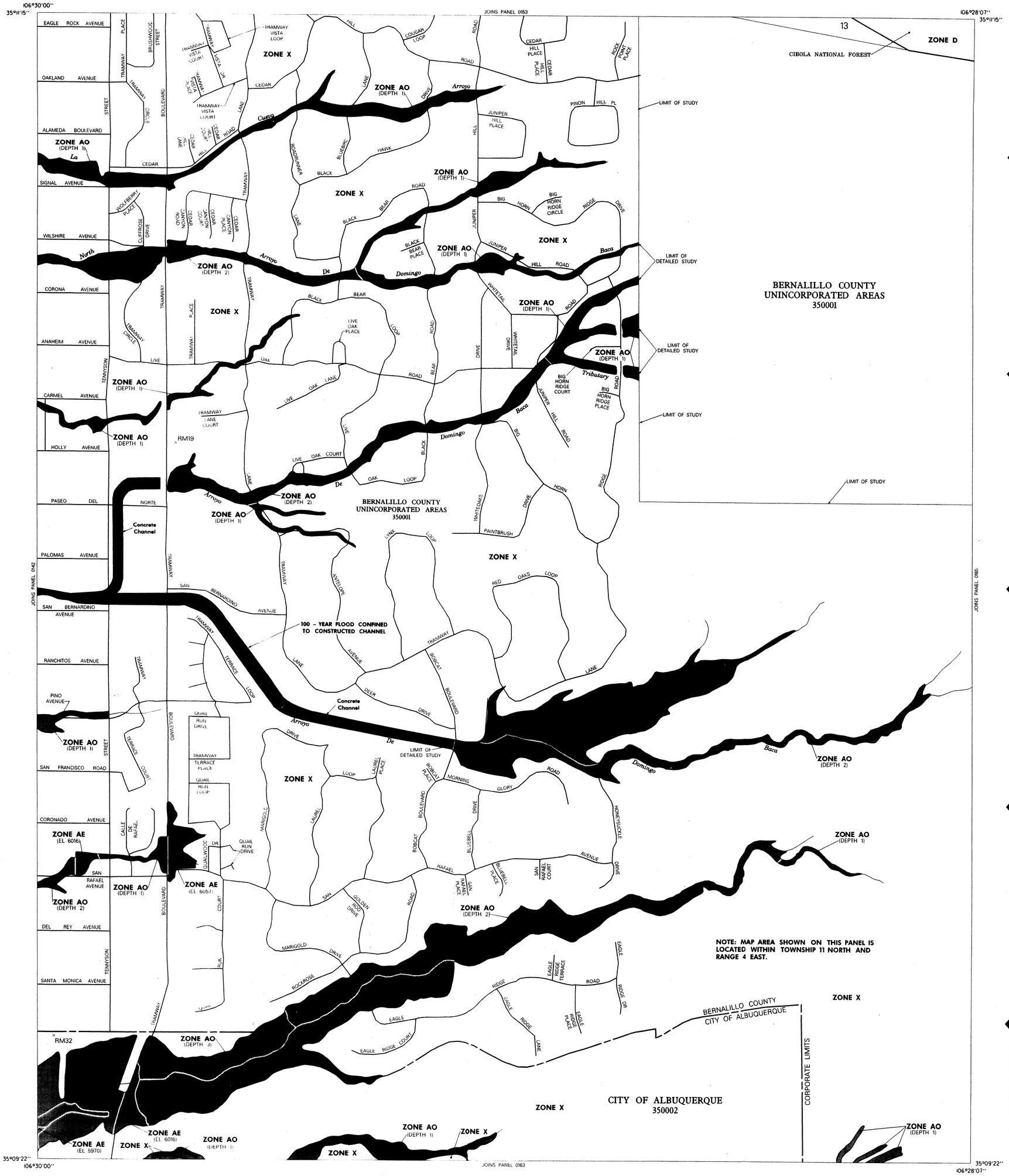

LEGEND

SPECIAL FLOOD HAZARD AREAS INUNDATED BY 100-YEAR FLOOD

- **ZONE A** — No base flood elevations determined.
- **ZONE AE** — Base flood elevations determined.
- **ZONE AH** — Flood depths of 1 to 3 feet (usually areas of ponding); base flood elevations determined.
- **ZONE AO** — Flood depths of 1 to 3 feet (usually sheet flow on sloping terrain); average depths determined. For areas of alluvial fan flooding, velocities also determined.
- **ZONE A99** — To be protected from 100-year flood by Federal flood protection system under construction; no base elevations determined.
- **ZONE V** — Coastal flood with velocity hazard (wave action); no base flood elevations determined.
- **ZONE VE** — Coastal flood with velocity hazard (wave action); base flood elevations determined.

FLOODWAY AREAS IN ZONE AE

OTHER FLOOD AREAS

- **ZONE X** — Areas of 500-year flood; areas of 100-year flood with average depths of less than 1 foot or with drainage areas less than 1 square mile; and areas protected by levees from 100-year flood.

OTHER AREAS

- **ZONE X** — Areas determined to be outside 500-year floodplain.
- **ZONE D** — Areas in which flood hazards are undetermined.

UNDEVELOPED COASTAL BARRIERS

Identified 1983 | Identified 1990 | Otherwise Protected Areas

Coastal barrier areas are normally located within or adjacent to Special Flood Hazard Areas.

- Flood Boundary
- Floodway Boundary
- Zone D Boundary
- Boundary Dividing Special Flood Hazard Zones, and Boundary Dividing Areas of Different Coastal Base Flood Elevations Within Special Flood Hazard Zones.
- 513 — Base Flood Elevation Line; Elevation in Feet. See Map Index for Elevation Datum.
- D — D — Cross Section Line
- (EL 987) — Base Flood Elevation in Feet Where Uniform Within Zone. See Map Index for Elevation Datum.
- RM7 × — Elevation Reference Mark
- ● M2 — River Mile
- 97°07'30", 32°22'30" — Horizontal Coordinates Based on North American Datum of 1927 (NAD 27) Projection.

NOTES

This map is for use in administering the National Flood Insurance Program; it does not necessarily identify all areas subject to flooding, particularly from local drainage sources of small size, or all planimetric features outside Special Flood Hazard Areas.

Coastal base flood elevations apply only landward of 0.0 NGVD, and include the effects of wave action; these elevations may also differ significantly from those developed by the National Weather Service for hurricane evacuation planning.

Areas of Special Flood Hazard (100-year flood) include Zones A, AE, AH, AO, A99, V, and VE.

Certain areas not in Special Flood Hazard Areas may be protected by flood control structures.

Boundaries of the floodways were computed at cross sections and interpolated between cross sections. The floodways were based on hydraulic considerations with regard to requirements of the Federal Emergency Management Agency.

Floodway widths in some areas may be too narrow to show to scale. Floodway widths are provided in the Flood Insurance Study Report.

This map may incorporate approximate boundaries of Coastal Barrier Resource System Units and /or Otherwise Protected Areas established under the Coastal Barrier Improvement Act of 1990 (PL 101-591).

Corporate limits shown are current as of the date of this map. The user should contact appropriate community officials to determine if corporate limits have changed subsequent to the issuance of this map.

For community map revision history prior to countywide mapping, see Section 6.0 of the Flood Insurance Study Report.

For adjoining map panels and base map source see separately printed Map Index.

MAP REPOSITORY
Refer to Repository Listing on Map Index

EFFECTIVE DATE OF
COUNTYWIDE FLOOD INSURANCE RATE MAP:
SEPTEMBER 20, 1996

EFFECTIVE DATE(S) OF REVISION(S) TO THIS PANEL:

Refer to the FLOOD INSURANCE RATE MAP EFFECTIVE DATE shown on this map to determine when actuarial rates apply to structures in zones where elevations or depths have been established.

To determine if flood insurance is available, contact an insurance agent or call the National Flood Insurance Program at (800) 638-6620.

APPROXIMATE SCALE IN FEET
500 0 500

NATIONAL FLOOD INSURANCE PROGRAM

FIRM
FLOOD INSURANCE RATE MAP

BERNALILLO COUNTY, NEW MEXICO AND INCORPORATED AREAS

PANEL 161 OF 825
(SEE MAP INDEX FOR PANELS NOT PRINTED)

CONTAINS: COMMUNITY	NUMBER	PANEL	SUFFIX
ALBUQUERQUE, CITY OF	350002	0161	D
BERNALILLO COUNTY, UNINCORPORATED AREAS	350001	0161	D

FORM 5, PLATE I

MAP NUMBER
35001C0161 D

EFFECTIVE DATE:
SEPTEMBER 20, 1996

Federal Emergency Management Agency

ELEVATION REFERENCE MARKS

REFERENCE MARK	ELEVATION (FEET NGVD)	DESCRIPTION OF LOCATION
RM19	6062.97	A 1"-diameter iron pipe anchored in a mound of concrete, with no stampings, projecting about 0.2', located 105' east of the centerline of Tramway Boulevard, 800' south of Live Oak Road, and 1' west of a 7'-tall sawed-off power pole.
RM32	6009.16	United States Coast and Geodetic Survey (USC & GS) standard brass tablet, stamped "Tumble, 1969", set in top of a concrete post projecting about 0.2', located 930' west of Tramway Road, about 45' north of San Antonio Drive, 90' east of a guy wire, and 116' northeast of the north power pole of pylon No. ER/45.

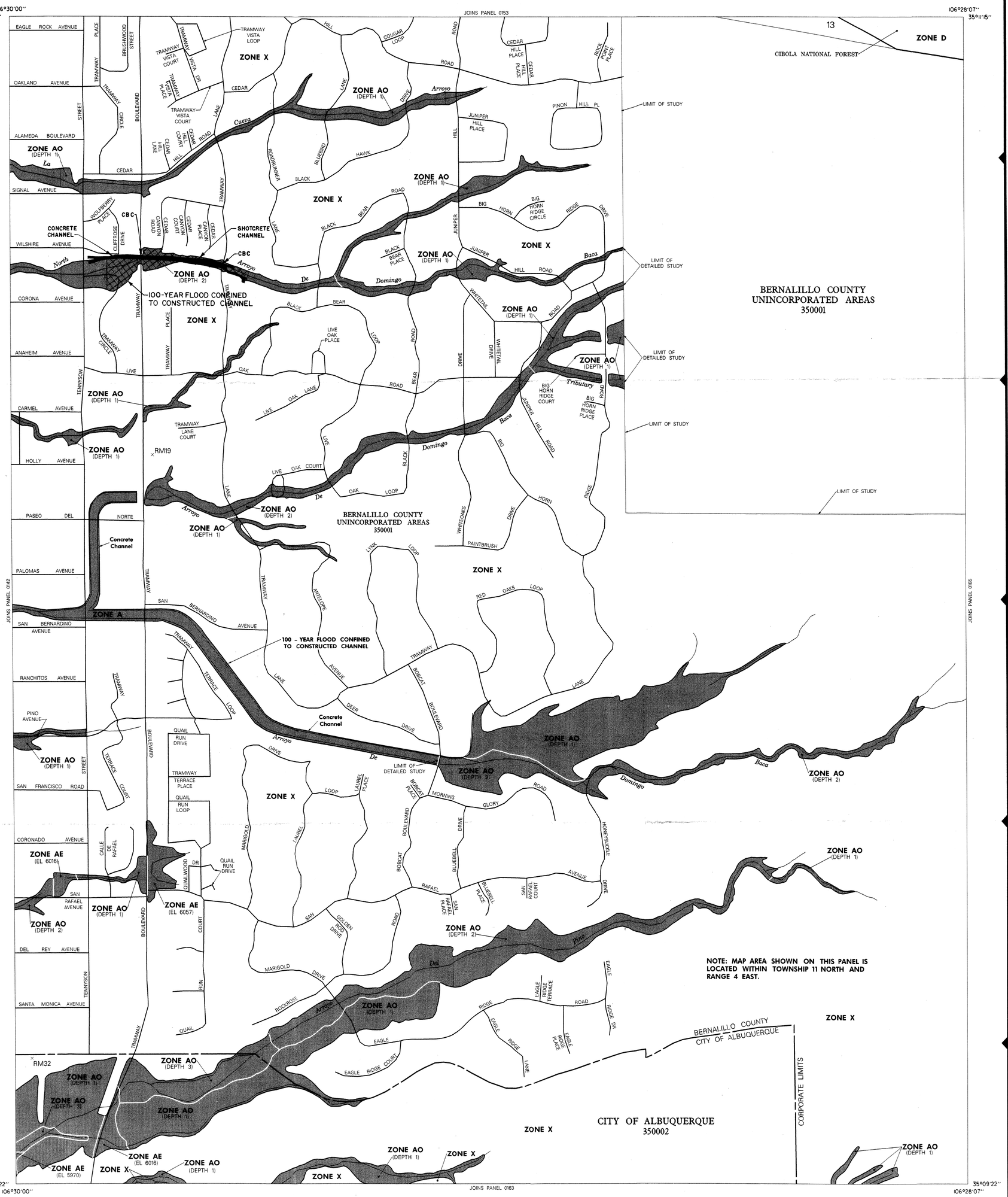

NOTE: MAP AREA SHOWN ON THIS PANEL IS LOCATED WITHIN TOWNSHIP 11 NORTH AND RANGE 4 EAST.

LEGEND

SPECIAL FLOOD HAZARD AREAS INUNDATED BY 100-YEAR FLOOD

- **ZONE A** No base flood elevations determined.
- **ZONE AE** Base flood elevations determined.
- **ZONE AH** Flood depths of 1 to 3 feet (usually areas of ponding); base flood elevations determined.
- **ZONE AO** Flood depths of 1 to 3 feet (usually sheet flow on sloping terrain); average depths determined. For areas of alluvial fan flooding, velocities also determined.
- **ZONE A99** To be protected from 100-year flood by Federal flood protection system under construction; no base elevations determined.
- **ZONE V** Coastal flood with velocity hazard (wave action); no base flood elevations determined.
- **ZONE VE** Coastal flood with velocity hazard (wave action); base flood elevations determined.

FLOODWAY AREAS IN ZONE AE

OTHER FLOOD AREAS

- **ZONE X** Areas of 500-year flood; areas of 100-year flood with average depths of less than 1 foot or with drainage areas less than 1 square mile; and areas protected by levees from 100-year flood.

OTHER AREAS

- **ZONE X** Areas determined to be outside 500-year floodplain.
- **ZONE D** Areas in which flood hazards are undetermined.

UNDEVELOPED COASTAL BARRIERS

Identified 1983 — Identified 1990 — Otherwise Protected Areas

Coastal barrier areas are normally located within or adjacent to Special Flood Hazard Areas.

- Flood Boundary
- Floodway Boundary
- Zone D Boundary
- Boundary Dividing Special Flood Hazard Zones, and Boundary Dividing Areas of Different Coastal Base Flood Elevations Within Special Flood Hazard Zones.
- ~~~513~~~ Base Flood Elevation Line; Elevation in Feet. See Map Index for Elevation Datum.
- (D)——(D) Cross Section Line
- (EL 987) Base Flood Elevation in Feet Where Uniform Within Zone. See Map Index for Elevation Datum.
- RM7 × Elevation Reference Mark
- ● M2 River Mile
- 97°07'30", 32°22'30" Horizontal Coordinates Based on North American Datum of 1927 (NAD 27) Projection.

NOTES

This map is for use in administering the National Flood Insurance Program; it does not necessarily identify all areas subject to flooding, particularly from local drainage sources of small size, or all planimetric features outside Special Flood Hazard Areas.

Coastal base flood elevations apply only landward of 0.0 NGVD, and include the effects of wave action; these elevations may also differ significantly from those developed by the National Weather Service for hurricane evacuation planning.

Areas of Special Flood Hazard (100-year flood) include Zones A, AE, AH, AO, A99, V, and VE.

Certain areas not in Special Flood Hazard Areas may be protected by flood control structures.

Boundaries of the floodways were computed at cross sections and interpolated between cross sections. The floodways were based on hydraulic considerations with regard to requirements of the Federal Emergency Management Agency.

Floodway widths in some areas may be too narrow to show to scale. Floodway widths are provided in the Flood Insurance Study Report.

This map may incorporate approximate boundaries of Coastal Barrier Resource System Units and /or Otherwise Protected Areas established under the Coastal Barrier Improvement Act of 1990 (PL 101-591).

Corporate limits shown are current as of the date of this map. The user should contact appropriate community officials to determine if corporate limits have changed subsequent to the issuance of this map.

For community map revision history prior to countywide mapping, see Section 6.0 of the Flood Insurance Study Report.

For adjoining map panels and base map source see separately printed Map Index.

MAP REPOSITORY
Refer to Repository Listing on Map Index

EFFECTIVE DATE OF
COUNTYWIDE FLOOD INSURANCE RATE MAP:
SEPTEMBER 20, 1996

EFFECTIVE DATE(S) OF REVISION(S) TO THIS PANEL:

Refer to the FLOOD INSURANCE RATE MAP EFFECTIVE DATE shown on this map to determine when actuarial rates apply to structures in zones where elevations or depths have been established.

To determine if flood insurance is available, contact an insurance agent or call the National Flood Insurance Program at (800) 638-6620.

APPROXIMATE SCALE IN FEET
500 0 500

NATIONAL FLOOD INSURANCE PROGRAM

FIRM
FLOOD INSURANCE RATE MAP

BERNALILLO COUNTY, NEW MEXICO AND INCORPORATED AREAS

PANEL 161 OF 825
(SEE MAP INDEX FOR PANELS NOT PRINTED)

CONTAINS: COMMUNITY	NUMBER	PANEL	SUFFIX
ALBUQUERQUE, CITY OF	350002	0161	D
BERNALILLO COUNTY, UNINCORPORATED AREAS	350001	0161	D

FORM 5, PLATE 2

MAP NUMBER
35001C0161 D

EFFECTIVE DATE:
SEPTEMBER 20, 1996

Federal Emergency Management Agency