HYDROLOGY

D17/D34
1 PLAN

D17/D34

1 Plan

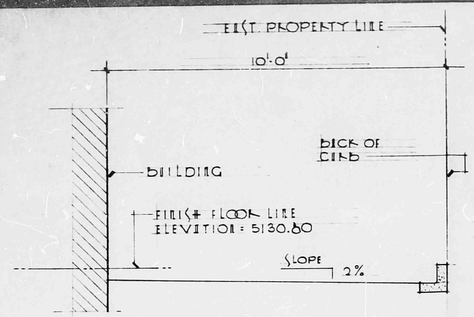

SECTION B — NO SCALE

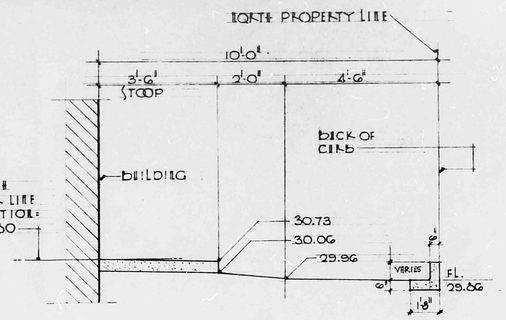

SECTION A — NO SCALE

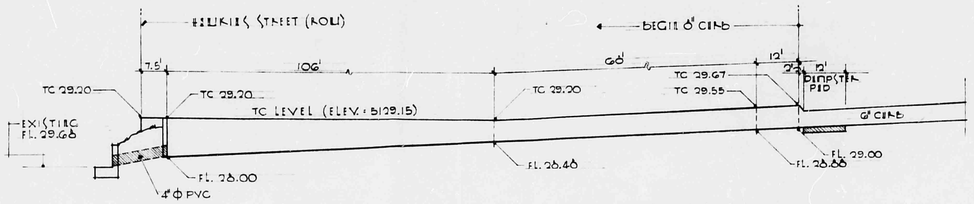

SECTION C - C — SCALE: 1" = 20'-0" HORIZONTAL, 1" = 2'-0" VERTICAL

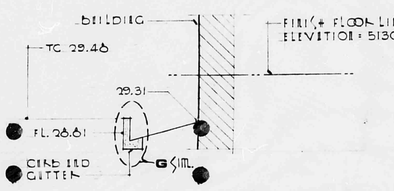

SECTION D — SCALE: 1" = 20'-0" HORIZONTAL, 1" = 2'-0" VERTICAL

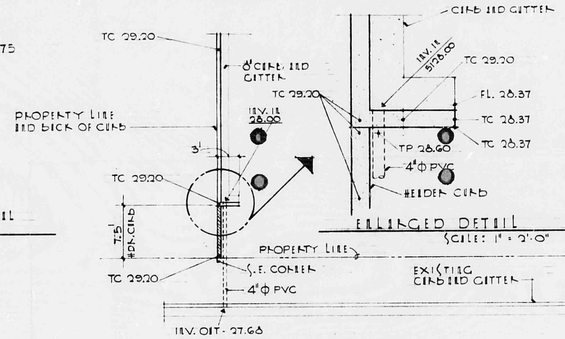

ENLARGED DETAIL — SCALE: 1" = 2'-0"

SECTION E — SCALE: 1" = 10'-0"

TYPICAL DETAIL OF CONCRETE SWALE — SCALE: 1/2" = 1'-0"

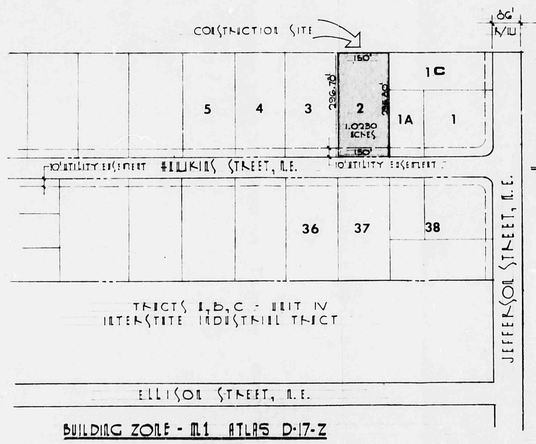

BUILDING ZONE - M1 ATLAS D-17-Z

SITE LOCATION MAP — SCALE: NONE

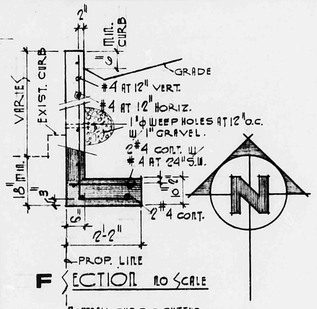

SECTION F — NO SCALE

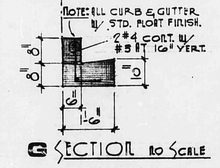

SECTION G — NO SCALE

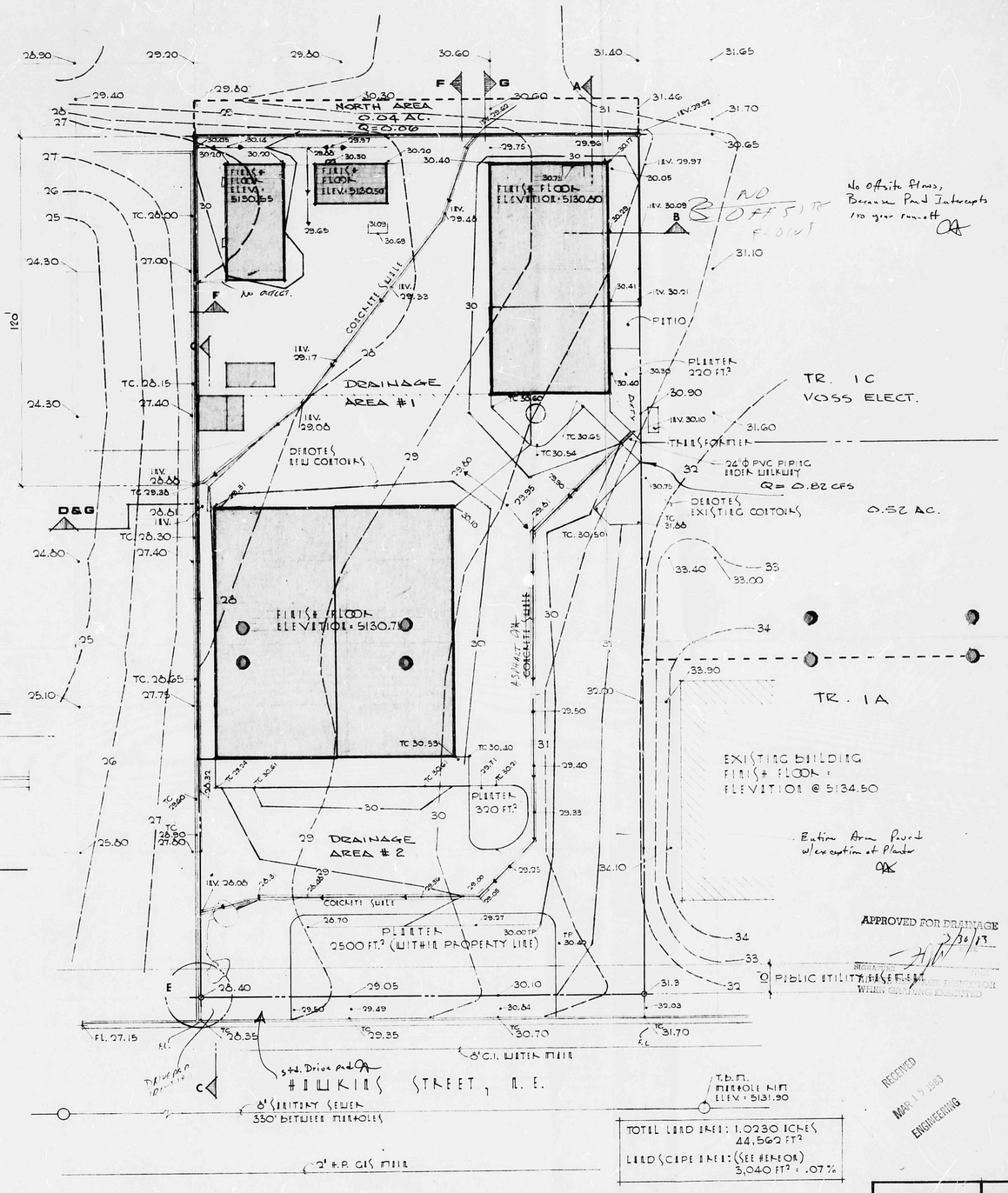

SITE GRADING AND DRAINAGE PLAN — SCALE: 1" = 20'-0"

NOTE:
DIGNEM OF LOT 2 OF INTERSTATE TRACT UNIT IV, LOTS 1-38 ALBUQUERQUE, NEW MEXICO SHOWING RELATIVE ELEVATIONS AND THE LOCATION OF CERTAIN PHYSICAL CHARACTERISTICS OR AND ADJACENT THERETO.
FOR USER SEE LEVEL ADD 5100 FT. TO FIGURES SHOWN.

ELEVATIONS BASED ON CITY ENGINEERS DATUM, B.M. 6-D17-1 (BRASS CAP IN PLACE) LOCATED APPROXIMATELY 350' SO. OF ELLISON ST. NE., AND ON WEST OF JEFFERSON ST., N.E., ELEVATION 5145.55 (MSL).

THE DIMENSIONS OF LOT 2, INTERSTATE INDUSTRIAL TRACT, UNIT IV ARE AS DETERMINED BY FIELD MEASUREMENT OF THE BUILDINGS, AS CONTROLLED BY ADOT SURVEY STAKES FOUND IN PLACE.

SHEET NO. 11-2

SITE GRADING AND DRAINAGE PLAN

S. JOHN HAWKINS ARCHITECT (505) 883-4097

KEST PROPERTIES DEVELOPMENT
4415 HOLKINS ST. N.E. ALBUQUERQUE, N.M.

JOHN T. ARMSTRONG — REGISTERED PROFESSIONAL ENGINEER — 8556 — 3/14/85

STATE OF NEW MEXICO — S. JOHN HAWKINS — 7787 — REGISTERED ARCHITECT

DATE: 3/14/85

RECEIVED MAR 15 1983 ENGINEERING