HYDROLOGY D17/D43

HITCHNER OFFICE/
WAREHOUSE

D17 – D43

1 PLAN

CITY OF ALBUQUERQUE

ALBUQUERQUE, NEW MEXICO

FILE COPY

INTER-OFFICE CORRESPONDENCE October 27, 1983 REF. NO._____

TO: John Armstrong, Civil Engineer/Hydrology

FROM: Billy Goolsby, Civil Engineer/Hydrology

SUBJECT: OFFICE WAREHOUSE BUILDING AT 7201 WASHINGTON STREET NE (D17-D43)

Mr. Kent Stout was in today (10-27-83) and left off the construction plans to obtain his permit. I briefly reviewed the drainage plan and told him that he would need the drainage plan approved, an easement for the storm-drain line through the adjacent property and a S.O. #19 for the outfall to the street.

I also told him that the plan appeared to be acceptable and that the foundation only permit could be released while he is obtaining the other requirements and while we review the plan for approval.

BG:mrk

INFORMATION SHEET

PROJECT TITLE Hitchner Ofc./Warehouse TYPE OF SUBMITTAL Drainage Plan

ZONE ATLAS PAGE NO. D-17 CITY ADDRESS 7201 Washington St. NE

LEGAL DESCRIPTION Lot 25, Interstate Industrial Tract, Unit IV

ENGINEERING FIRM Bryant Engineering CONTACT Dick Bryant

ADDRESS Box 4604, Albq. 87196 PHONE 836-6455

OWNER Don Hitchner CONTACT

ADDRESS 6871 Mossman Pl. NE 87110 PHONE

ARCHITECT M. Kent Stout CONTACT Kent Stout

ADDRESS 3017 Commercial NE 87107 PHONE 344-2750

SURVEYOR Southwest Surveying CONTACT Frank Wilson

ADDRESS 215 Marble NW 87102 PHONE 247-4444

CONTRACTOR Don Hitchner CONTACT

ADDRESS 6871 Mossman Pl. NE 87110 PHONE

DATE SUBMITTED September 2, 1983

BY Richard C Bryant

RECEIVED
DEC 29 1983
HYDROLOGY SECTION

City of Albuquerque
P.O. BOX 1293 ALBUQUERQUE, NEW MEXICO 87103

January 4, 1984

Mr. Richard Bryant, PE
Bryant Engineering
P.O. Box 4604
Albuquerque, NM 87196

REF: HITCHNER OFFICE/WAREHOUSE DRAINAGE PLAN (D17-D43)

Dear Mr. Bryant:

The above mentioned plan, dated 12/28/83, is hereby approved. Please see that copies of the approved plan as well as approved "Drainage Facilities Within City Right-of-Way" documents are attached to the permit sets prior to submittal to Hydrology for sign-off.

If you have any questions on the above, please contact me at 766-7644.

Thank you,

John Armstrong
Civil Engineer/Hydrology

JA:mrk

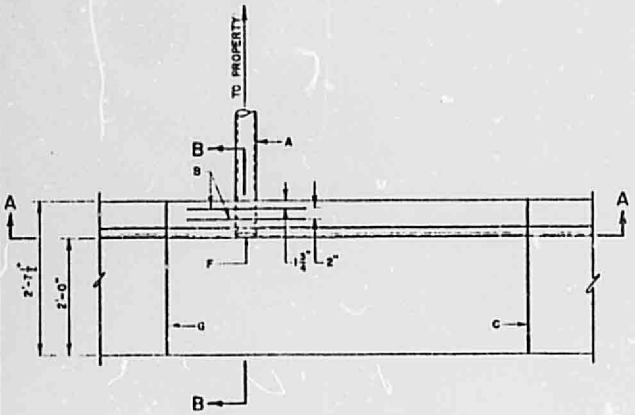

PLAN

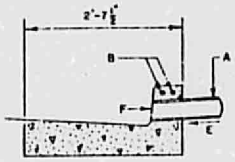

SECTION B-B

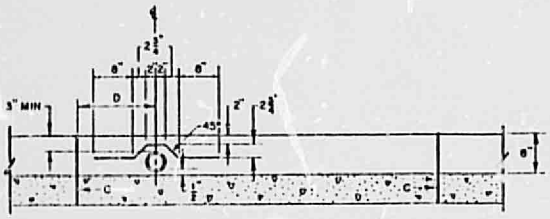

SECTION A-A

GENERAL NOTES:

1. WHEN PLACING DRAIN THROUGH EXISTING CURB, REMOVE AND REPLACE ENTIRE STONE OF CURB AND GUTTER.
2. THE CITY DOES NOT ACCEPT RESPONSIBILITY FOR MAINTENANCE FOR ANY DRAIN LINES INSTALLED BY OR FOR PRIVATE PROPERTY OWNERS.

CONSTRUCTION NOTES:

A. DRAIN, D.I. OR SCH. 40 P.V.C. PIPE, 4" NOM. SIZE (MAX.) TO PROPERTY.
B. 2-NO. 3 BARS, 2'-4" LONG, PLACED AS SHOWN.
C. COLD JOINT.
D. DISTANCE FROM ℄ OF DRAIN TO NEAREST JOINT, VARIABLE WITH 16" MIN.
E. SLOPE 1/8" PER FT. WITHIN R.O.W.
F. DRAIN PIPE NOT TO PROTRUDE BEYOND CURB FACE
G. JOINT NEAREST TO DRAIN TO BE AN EXPANSION JOINT

REVISIONS	CITY OF ALBUQUERQUE
	DRAINAGE
	DRAIN LINE THROUGH CURB
	DWG. K-15 JAN 1981

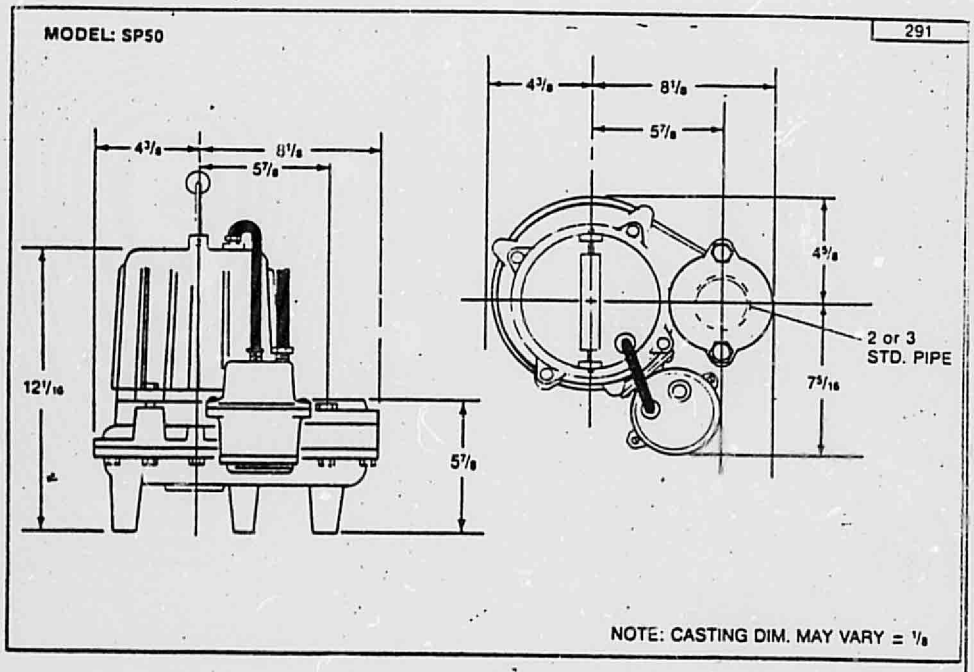

MODEL SP-50M PUMP DETAIL

SECTION 210
DIMENSIONAL DRAWINGS
& PERFORMANCE DATA

HYDR-O-MATIC
PUMPS
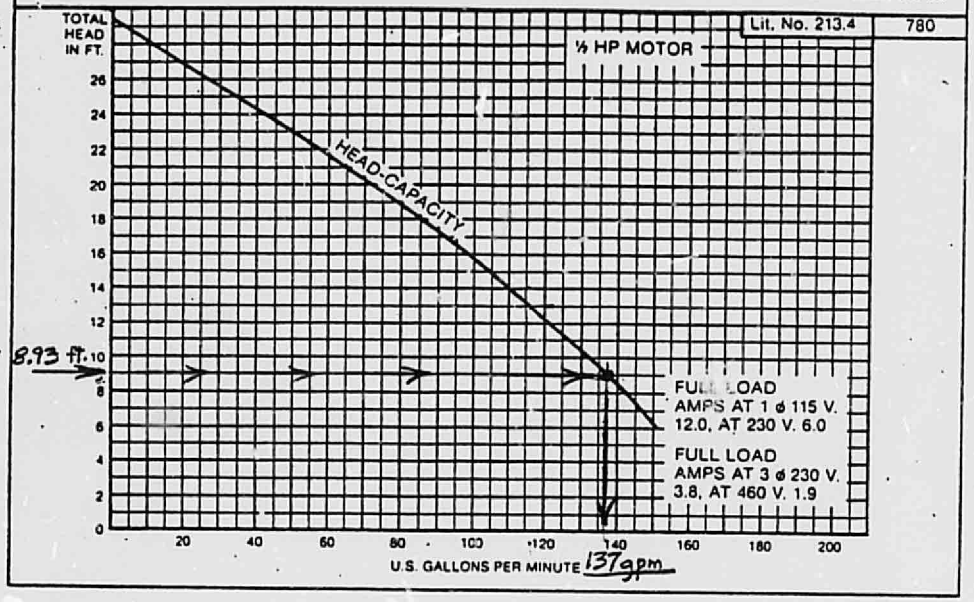
MODEL: SP50 SUBMERSIBLE SEWAGE PUMP — MAX. SOLIDS 1½" SPHERE — 1750 RPM