D20/D3C

0000 0000 0728

D20/D3C

25×10

0000 0000 0729

FILE COPY

City of Albuquerque
P.O. BOX 1293 ALBUQUERQUE, NEW MEXICO 87103

DESIGN HYDROLOGY SECTION
123 Central NW, Albuquerque, NM 87102
(505) 766-7644

May 9, 1986

Gil Gardner
Gardner Mason & Associates
2127 Menaul Blvd., NE
Albuquerque, New Mexico 87107

RE: REVISED DRAINAGE REPORT FOR HERITAGE EAST UNIT 5 (D-20/D3C)
RECEIVED MAY 9, 1986

Dear Mr. Gardner:

The above referenced submittal, plans dated May 8, 1986, are approved.

Please see that a copy of these approved plans are attached to the Work Order set prior to sign-off at DRC.

If I can be of further assistance, please call.

Cordially,

Billy J. Goolsby

Billy J. Goolsby, P.E.
C.E./Hydrology Section

cc: Alan Ortega
Bellamah Community Dev.

BJG/bsj

25x10

0000 0000 0730

Gardner, Mason & Associates, Inc.
ENGINEERS & PLANNERS

2127 Menaul Blvd. NE
Albuquerque, N.M. 87107
(505) 881-3846

132 W. Las Cruces Av.
Las Cruces, N.M. 88001
(505) 525-8057

RECEIVED
MAY 01 1986
HYDROLOGY SECTION

May 1, 1986

Mr. Billy Goolsby
Design Hydrology Section
The City of Albuquerque
P.O. Box 1293
Albuquerque, New Mexico 87103-1293

RE: Storm Drain and Construction Plan Revisions
For Heritage East, Unit 5

Dear Mr. Goolsby:

Attached are the revised Grading Plan and Storm Drain Plan & Profile Sheets. These revisions have occurred after approval of the Drainage Report, March 13, 1986 and have been highlighted for your convenience.

Also enclosed are the copies of the calculation sheets which summarize the v-depth, Freeboard, slope checks on the lines branching into the storm drain from the catch basins.

Please let us know if you should need further information or any clarification.

Sincerely,

Dorothy Chavez-Dolan

Dorothy Chavez-Dolan

DCD:mg

25×10

0000 0000 0731

DRAINAGE INFORMATION SHEET

PROJECT TITLE: HERITAGE EAST UNIT 5 ZONE ATLAS/DRNG. FILE #: D-20-Z/D3C

LEGAL DESCRIPTION: Parcel A & B - Heritage East Unit 5

CITY ADDRESS:

ENGINEERING FIRM: GARDNER MASON & ASSOC CONTACT: GIL GARDNER/DOROTHY DOLAN

ADDRESS: 2127 Menaul Blvd PHONE: 881-3846

OWNER: Bellamah Community Develop CONTACT: Allan Ortega

ADDRESS: Box 3300 PHONE: 884-6606

ARCHITECT: n/a CONTACT:

ADDRESS: PHONE:

SURVEYOR: Albuquerque Surveying CONTACT: Fred Sanchez

ADDRESS: 2119 Menaul Blvd PHONE: 884-2036

CONTRACTOR: n/a yet CONTACT:

ADDRESS: PHONE:

RECEIVED
MAY 01 1986
HYDROLOGY SECTION

PRE-DESIGN MEETING:

___ YES

___ NO

___ COPY OF CONFERENCE RECAP SHEET PROVIDED

SUB NO. 85-159

EPC NO.

PROJ. NO. 2864

TYPE OF SUBMITTAL:

___ DRAINAGE REPORT

___ DRAINAGE PLAN

___ CONCEPTUAL GRADING & DRAINAGE PLAN

___ GRADING PLAN

___ EROSION CONTROL PLAN

___ ENGINEER'S CERTIFICATION

X Revision of Plates in Drainage Report

CHECK TYPE OF APPROVAL SOUGHT:

___ SKETCH PLAT APPROVAL

___ PRELIMINARY PLAT APPROVAL

___ SITE DEVELOPMENT PLAN APPROVAL

___ FINAL PLAT APPROVAL

___ BUILDING PERMIT APPROVAL

___ FOUNDATION PERMIT APPROVAL

___ CERTIFICATE OF OCCUPANCY APPROVAL

___ ROUGH GRADING PERMIT APPROVAL

___ GRADING/PAVING PERMIT APPROVAL

X OTHER Revised Plans Approval (SPECIFY)

DATE SUBMITTED: Dorothy Chavez-Dolan

BY: 5-1-86

25 × 10

0000 0000 0732

FILE COPY

City of Albuquerque

P.O. BOX 1293 ALBUQUERQUE, NEW MEXICO 87103

DESIGN HYDROLOGY SECTION
123 Central NW, Albuquerque, NM 87102
(505) 766-7644

March 13, 1986

Gilbert Gardner
Gardner, Mason & Associates, Inc.
2127 Menaul Blvd., NE
Albuquerque, New Mexico 87107

RE: DRAINAGE REPORT FOR HERITAGE EAST UNIT 5 (D-20/D3C)
RECEIVED FEBRUARY 25, 1986

Dear Mr. Gardner:

The above referenced report is hereby approved for the purpose of granting Preliminary Plat approval at DRB. The plan dated February 21, 1986, is approved for inclusion in the construction set for submittal for DRC review and approval.

Please be advised that an additional requirement for Preliminary Plat will be an approved infrastructure listing.

DRB will approve both the listing and the plat at the same time for Preliminary Plat approval.

With Preliminary Plat approval, the infrastructure construction plans may be submitted for Work Order request.

If I can be of further assistant, please feel free to call me at 766-7644.

Cordially,

Billy J. Goolsby

Billy J. Goolsby, P.E.
C.E./Design Hydrology

BJG/bsj

25×10

0000 0000 0733

DRAINAGE INFORMATION SHEET

PROJECT TITLE: HERITAGE E. UNIT 5 ZONE ATLAS/DRNG. FILE #: D-20/D3C

LEGAL DESCRIPTION: Parcel A & B HERITAGE, UNIT 5

CITY ADDRESS: N/A

ENGINEERING FIRM: Gardner Mason & Assoc. CONTACT: Gil Gardner

ADDRESS: PHONE: (505) 881-3846

OWNER: BELLAMAH C.D. CONTACT: ALLEN ORTEGA

ADDRESS: PHONE: 884-6606

ARCHITECT: CONTACT:

ADDRESS: PHONE:

SURVEYOR: CONTACT:

ADDRESS: PHONE:

CONTRACTOR: CONTACT:

ADDRESS: PHONE:

RECEIVED FEB 25 1986 HYDROLOGY SECTION

PRE-DESIGN MEETING:

X YES

___ NO

___ COPY OF CONFERENCE RECAP SHEET PROVIDED

DRB NO. 85-159 6/4/85

EPC NO. SD-81-5 1 2/29/85

PROJ. NO. ___

TYPE OF SUBMITTAL:

___ DRAINAGE REPORT

___ DRAINAGE PLAN

___ CONCEPTUAL GRADING & DRAINAGE PLAN

___ GRADING PLAN

___ EROSION CONTROL PLAN

___ ENGINEER'S CERTIFICATION

CHECK TYPE OF APPROVAL SOUGHT:

___ SKETCH PLAT APPROVAL

X PRELIMINARY PLAT APPROVAL

___ SITE DEVELOPMENT PLAN APPROVAL

___ FINAL PLAT APPROVAL

___ BUILDING PERMIT APPROVAL

___ FOUNDATION PERMIT APPROVAL

___ CERTIFICATE OF OCCUPANCY APPROVAL

___ ROUGH GRADING PERMIT APPROVAL

___ GRADING/PAVING PERMIT APPROVAL

___ OTHER ___ (SPECIFY)

DATE SUBMITTED: 2/21/86

BY: [illegible]

25 × 10

0000 0000 0934

STORM DRAINAGE STUDY

ON

HERITAGE EAST UNIT 5

FOR

BELLAMAH COMMUNITY DEVELOPMENT

FEBRUARY 1986

RECEIVED
FEB 05 1986
HYDROLOGY SECTION

GARDNER, MASON & ASSOCIATES, INC
2127 MENAUL BOULEVARD N.E.
ALBUQUERQUE, NEW MEXICO 87107

GILBERT D. GARDNER
NEW MEXICO
REGISTERED PROFESSIONAL ENGINEER
2/21/86

25×

0000 0000 0735

PART ONE

INTRODUCTION

Location & General Characteristics

Heritage East Unit 5 is geographically located in the Northeast Heights of Albuquerque bounded by Domingo Baca Arroyo on the north, San Francisco & Jacobo Sts. on the south, Heritage East Unit 4 on the east and Ventura St. on the west. Proposed development for the study area is residential. Existing drainage pattern slopes from east to west at grades ranging from 2% to 4%. Surrounding areas are undeveloped with the exception of an existing subdivision (Heritage Hills Unit 4) west of Ventura & the study area.

Current Street & Drainage Improvements

San Francisco and Quintana Streets are both fully improved draining northwesterly to Ventura Street. From north of the intersection at Quintana Street, Ventura Street drains northerly into the recently improved reinforce-concrete-lined Domingo Baca Channel. Ventura Street is currently improved west of the street conterline fronting Heritage Hills Unit 4. /There are existing storm inlets along Quintana Drive which drains into the Domingo Baca Arroyo Via a 60" RCP storm drainage system running northerly along dedicated drainage easement.

Offsite Flows

Portions of Tract B Unit 2 and all of Heritage East Unit 4 southerly and southeasterly respectively of the study area comprise of offsite flows contributing to the proposed subdivision.

RECEIVED
FEB 25 1986
HYDROLOGY SECTION

25×10

0000 0000 0736

PART TWO

RECOMMENDATIONS & METHOD OF APPROACH

This section of the report will address the recommended drainage improvements and will select an approach to be used for implementation.

Basin Subdivisions

The study area is divided into drainage sub-basins as shown on Plate I - Drainage Map. Hydrologic considerations include drainage from Heritage East Unit 4 which enter the study area at location G on Quintana Dr. Offsite flows from sub-basin 1, comprising approximately 50% of Tract B Unit 2, enter the study area at Location A.

Interior Drainage

The interior drainage will utilize street flows to carry run-off to storm interception points along Calhoun St. which drains northerly towards Quintana Dr. Runoff from Heritage East Unit 4 will be conveyed westerly along Quinatana Dr. towards existing interception points at Location 4. Non-intercepted flows will be diverted to Ventura St. northward into the Domingo Baca Channel.

Proposed Drainage & Method of Approach

A storm sewer system is proposed along Calhoun St. This system is to be connected to an existing 60" RCP storm sewer which out-falls into the Domingo Baca Channel.

Design of the Calhoun Line is based on the following considerations:

1. Flows south of Mabry will be diverted to San Francisco St.

2. Flows north of Mabry will be conveyed via both street flows and pipe flows northerly to the Domingo Baca.

3. Due to grade restrictions on Calhoun Street , no more the 10 cfs of street flow will be allowed at the various sump locations in order to meet DPM criteria. The 10 cfs limitation is derived from a water surface profile calculation at the back of this report.

4. The Calhoun line is proposed with a grade of 0.25% and will be designed for pressure flow for hydraulic efficiency.

5. Calhoun Street and Quintana Street are major local streets which are not subject to one lane dry criteria.

25×10

0000 0000 0737

PART THREE

HYDROLOGY & HYDRAULIC CONVEYANCE

Hydrologic Parameters

1. Rainfall - A rainfall of 2.5 inches was used for 6-hour duration and 100 year frequency.

2. Soil Group - Type B

3. Runoff Coefficient - C
   The proposed lot grading utilizing FHA Grading Standards provides for relatively long runoff times allowing additional infiltration and surface retention. A C - factor of 0.55 is selected as representative of the developed conditions.

Analysis

The following table shows flows from each sub-basin for both 10 year and 100 year storms. Accumulated flows are also calculated to determined peak rates at intersections. Please refer to Plate I.

Hydraulic Conveyance

Hydraulic calculation for streets flows were calculated as shown. Hydraulic calculations were done for pipe flows. The following are these calculations.

25×

0000 0000 0738

HERITAGE EAST UNIT 5 DRAINAGE AREAS

LOC.	BASIN NO.	DRAIN AREA	TRAVEL LENGTH	HIGH ELEV	LOW ELEV	SLOPE	TIME CONCEN	RUNOFF C	I(10)	I(100)	Q(10)	Q(100)
OFFSITE	1	7.6	1200	5615	5571	0.04	6.54	0.55	3.47	5.28	14.5	22.1
	2	2.6	850	5604	5569	0.04	4.80	0.55	3.47	5.28	5.0	7.6
	3	2.6	420	5573	5558	0.04	2.95	0.55	3.47	5.28	5.0	7.6
	3A	0.5	130	5560	5559	0.01	2.16	0.55	3.47	5.28	1.0	1.5
	4	6.5	1194	5601	5557	0.04	6.51	0.55	3.47	5.28	12.4	18.9
	5	5.9	991	5591	5557	0.03	5.79	0.55	3.47	5.28	11.3	17.1
	6	1.3	600	5599	5584	0.03	4.45	0.55	3.47	5.28	2.5	3.8
	7	5.4	929	5591	5556	0.04	5.32	0.55	3.47	5.28	10.3	15.7
	8	4.7	780	5584	5556	0.04	4.73	0.55	3.47	5.28	9.0	13.7
	9	4.8	1115	5587	5555	0.03	6.80	0.55	3.47	5.28	9.2	14.0
	10	0.9	250	5556	5552	0.02	2.69	0.55	3.47	5.28	1.7	2.6
	11	2.4	300	5560	5557	0.01	3.71	0.55	3.47	5.28	4.6	7.0
OFFSITEUNIT	4	38.0	2668	5638	5584	0.02	15.22	0.58	2.80	4.27	61.8	94.0

ACCUMULATED FLOWS

LOCATION	DRAIN AREA	TRAVEL LENGTH	HIGH ELEV	LOW ELEV	SLOPE	TIME CONCEN	RUNOFF C	I(10)	I(100)	Q(10)	Q(100)
A	10.2	1290	5615	5569	0.04	6.99	0.55	3.47	5.28	19.5	29.6
B	12.8	1640	5615	5558	0.03	8.50	0.55	3.47	5.28	24.4	37.2
B1	6.9	1790	5615	5558	0.03	9.40	0.55	3.47	5.28	13.2	20.1
B2	8.8	1750	5615	5558	0.03	9.16	0.55	3.47	5.28	16.8	25.6
C	13.4	2106	5615	5557	0.03	11.27	0.55	3.27	4.97	24.1	36.6
D	19.3	2380	5615	5557	0.02	12.98	0.55	3.04	4.63	32.3	49.1
E	24.7	2654	5615	5556	0.02	14.62	0.55	2.86	4.35	38.9	59.1
F	29.4	2928	5615	5555	0.02	16.27	0.55	2.71	4.12	43.8	66.7
G *	39.3	2668	5638	5584	0.02	15.29	0.55	2.80	4.26	60.4	92.0
H *	44.1	3497	5638	5555	0.02	18.83	0.55	2.51	3.83	61.0	92.8
I *	73.5	3497	5638	5555	0.02	18.83	0.55	2.51	3.83	101.6	154.7
J *	74.4	3747	5638	5552	0.02	18.83	0.55	2.51	3.83	1.2	1.6
K **	11.2	1950	5638	5557	0.04	9.06	0.55	3.47	5.28	21.4	32.6

* FLOWS AT NODES G, H, I AND J INCLUDE DRAINAGE FROM UNIT 4

25×

0000 0000 0739

$$-\left(\frac{y}{2}\right) + \sqrt{\left(\frac{y}{2}\right)^2 + \frac{2v^2 y}{g}}$$

$$= -\left(\frac{.48}{2}\right) + \sqrt{\left(\frac{.48}{2}\right)^2 + \frac{2(4.7^2)(.48)}{32.2}}$$

$$=$$

25×10

0000 0000 0740

Unit Five Street Flows

100 YEAR STORM

Location A (Jacobo & Mabry)

$Q = 29.6$ cfs $\quad S = 2.0\%$

$D = 0.45'$ $\quad V = 4.4$ fps $\quad$ (PL. 22.3D-1)

$F = \dfrac{4.4}{\sqrt{32.2(0.45)}} = 1.16$, $D_2/D_1 = 1.2$ (PL. 22.3E-1)

$D_2 = 1.2 \times 0.45 = 0.54'$ O.K.

Location B (Calhoun & Mabry)

$Q = 37.2$ cfs $\quad S = 2.0\%$

$D = 0.48'$ $\quad V = 4.7$ fps

$F = 1.2$ $\quad D_2/D_1 = 1.3$

$D_2 = 0.48 \times 1.3 = 0.62'$ OK

Location B_1 (Calhoun & Mabry - North)

$Q = 20.1$ cfs $\quad S = 0.5\%$

$D = 0.50'$ $\quad V = 2.5$ fps

Location B_2 (Calhoun & San Francisco)

$Q = 25.6$ cfs $\quad S = 0.5\%$

$D = 0.54'$ $\quad V = 2.7$ fps

Location C (Calhoun at Sta. 8+75 - 4 Type "A" Inlets)

$Q = 36.6$ cfs $\quad S = 0.5\%$

$D = 0.62'$ $\quad V = 3.2$ fps

Capacity of Type "A" inlet = 7.0 cfs (PL. 22.3D-5)

Max 6.7 cfs

Net St. Flow = 36.6 - 26.8 = 9.8 cfs < 10.5 cfs O.K.

25×

0000 0000 0741

Unit 5 Street Flow

Location D (Calhoun at Sta. 6+25.2 - 2 Type "B" Double Inlets)

$Q = Q_{100} - Q_{pipe} = 49.1 - 26.8 = 22.3$ cfs

$S = 0.5\%$

$D = 0.5'$ $V = 2.5$ fps

Capacity of Type "B"-Double Inlet = 7.0 cfs Use 6 cfs

Net Street Flow = 22.3 − 12 = 10.3 cfs < 10.5 cfs O.K.

Total Pipe Flow = 26.8 + 12 = 38.8 cfs

Location E (Calhoun at Sta. 3+39.6 - 4 Type "A" Inlets)

$Q = Q_{100} - Q_{pipe} = 59.1 - 38.8 = 20.3$ cfs

$S = 0.5\%$

$D = 0.49$ $V = 2.3$ fps

Capacity of Type "A" inlet = 5.6 cfs, Use 4.6 cfs

Net Street Flow = 20.3 − 18.4 = 1.9 cfs < 10.5 cfs O.K.

Total Pipe Flow = 38.8 + 18.4 = 57.2 cfs

Location F (Calhoun at Sta. 2+00)

$Q = Q_{100} - Q_{pipe} = 66.7 - 57.2 = 9.5$ cfs < 10.5 cfs OK.

$S_{av.} = 0.6\%$

$D = 0.4'$ $V = 2.0$ fps

Location G (Quintana & Park Boundary)

$Q = 92.0$ cfs $S = 2.4\%$

$D = 0.65'$ $V = 6.2$ fps

Location H (Quintana @ Sta. 4+36)

$Q = Q_{100} - Q_{pipe} = 92.8 - 80$ (per Unit 4 Report) = 12.8 cfs

$S = 3.9\%$, $D = 0.32'$ $V = 4.5$ fps

$F = 1.40$ $D_c/D_1 = 1.6$ $D_c = 1.6 \times 0.32 = 0.51'$ O.K.

25 ×

0000 0000 0742

Location I (Calhoun & Quintana)

$Q = Q_{100} - Q_{pipe} = 154.7 - (80 + 51.2) = 22.8$ cfs

$S = 0.6\%$

$D = 0.48'$ $V = 2.6$ fps

Location J (Quintana & Ventura)

$Q = 22.8 + 2.6 = 25.4$ cfs

$S = 0.5\%$ (Ventura)

$D = 0.68'$ $V = 2.7$ fps

25×

THIS MICROIMAGE IS THE BEST POSSIBLE REPRODUCTION DUE TO THE POOR QUALITY OF THE ORIGINAL DOCUMENT.

HYDRAULIC GRADE LINE CALCULATION SHEET

Sh. ___ of ___

PROJECT UNIT 5

LINE CALHOUN LINE

CALCULATED BY ___

DATE 2-20-86

*Conduit unseals when D is less than d

	STA.	ELEV. INV.	D*	ELEV. H.G.L.	SECTION	d	A	Q	V	$\frac{V^2}{2g}$	K	S_f	Av. S_f	L	h_f	h_b	h_j	h_l	ELEV. E.G.L.
Exist. line "A" unit 4	1+45	47.94		52.94		60	19.62	137	6.80	0.76	2604	.0028							53.70
	1+45	48.04		53.07		"	"	"	"	"	"	"					.13		53.83
	0+00	48.38		53.48		"	"	"	"	"	"	"		145	.41				54.24
	0+00	48.60		53.41		36	7.07	57	8.06	1.01	6659	.0073					.05		54.29
MH	0+50	49.16		53.83		"	"	"	"	"	"	"		75	.55				54.84
	0+50	49.16		54.11	64.00	42	9.62	37	5.20	0.55	1006	.0032					.05		54.89
MH	3+39.6	49.88		55.07	✓	"	"	"	"	"	"	"		290	.93				55.82
	3+39.6	49.88		55.44		"	"	40	4.16	0.27	"	.0016					.03		55.85
MH	6+25.2	50.59		56.04	✓	"	"	"	"	"	"	"		286	.46				56.31
	6+25.2	50.59		56.05		"	"	"	"	"	"	"					.01		56.32
MH	8+75.0	50.91		56.45	✓	"	"	"	"	"	"	"		250	.40				56.72
	8+75.0																		

166.3007 ①
11.87

4-82

PLATE 22.8 3-5

22.8

25X

n	$\frac{2gn^2}{2.21}$	n	$\frac{2gn^2}{2.21}$
.012	.00420	.020	.01166
.013	.00492	.022	.01410
.014	.00571	.025	.01821
.015	.00656	.030	.02623
.016	.00746	.035	.03570

WATER SURFACE COMPUTATION SHEET

Project: HERITAGE EAST UNIT 5

Reach: CALHOUN ST.

$S_f = \left[\frac{2gn^2}{2.21}\right] \frac{H_v}{R^{4/3}}$ or $\left[\frac{1}{K}\right]^2 X^2$, $H_v = \frac{V^2}{2g}$, $L = \frac{\Delta E}{S - S_{f_{av}}}$

$X = \frac{Qn}{b^{8/3}} = \frac{Qn}{d^{8/3}}$ n = .013

S = Channel Slope, E = D + H_v

$\Delta E = L(S - S_{f_{av}})$

Sheet 1 of 1

Calc. ____ Date ____

Check ____ Date ____

Ref. ____

Station (L)	Invert Elev.	D	W.S. Elev.	Q	Section	Area	V	H_v (ΔH_v)	E.G Elev.	w.p. D/b	R $(1/K)^2$	$R^{4/3}$ X^2	S_f ($S_{f_{av}}$)	S	$S - S_{f_{av}}$	E (ΔE)	h_f	h_l	E.G. Elev.
2+50	55.90	.35	56.25	10.5		4.78	2.20	.08	56.33	28.02	.17	.10	.0068						56.33
79													.0034				.27		
3+39	55.73	.85	56.58	10.5		20.64	.51	.01	56.54	33.70	.61	.52	.0001						56.60
165													.0014				.23		
5+04	56.42	.41	56.83	10.5		6.56	1.6	.04	56.87	32.82	.20	.12	.0028						56.83
115													.0014				.16		
6+19	56.13	.85	56.98	10.5		20.64	.51	.01	56.99	33.7	.61	.52	.0001						56.99
181													.0025				.46		
7+50	57.07	.34	57.41	10.5		4.52	2.33	.08	57.49	26.34	.17	.10	.0025						57.45

4-82

161

PLATE 22.8 B-6

22.8

25X

THIS MICROIMAGE IS THE BEST POSSIBLE REPRODUCTION DUE TO THE POOR QUALITY OF THE ORIGINAL DOCUMENT.

0000 0000 0174

0000 0000 0745

D20/D3C

RECEIVED MAR 10 1987 HYDROLOGY SECTION

873

08726601 **SIDEWALK VARIANCE AGREEMENT**

THIS AGREEMENT, made this 13th day of March, 1987, is between the City of Albuquerque, a New Mexico municipal corporation ("City"), and [state name of developer:] Bellamah Community Development ("Developer"), a [state type of business entity (e.g.: "a New Mexico corporation," "a partnership," "joint venture,", etc.:] a partnership, pursuant to Section 6 of the City's Subdivision Ordinance (7-16-6 R.O. 1974, Enactment No. 56-1983, effective June 29, 1983, as amended).

WHEREAS, the Developer is developing certain lands within the City of Albuquerque, County of Bernalillo, State of New Mexico, known as [describe:] Heritage East Unit 5 (the "Subdivision"); and

WHEREAS, the Developer has submitted and the City has approved Developer's development plans and [state "preliminary" or "final":] subdivision (final) plat, to be identified as [state name of plat:] Heritage East Unit 5; and

WHEREAS, Developer has requested and the City has determined that it is acceptable for the Developer to defer construction of the sidewalks within the Subdivision until after construction of other required infrastructure; and

WHEREAS, the Subdivision Ordinance requires all infrastructure, including sidewalks, to be completed within two (2) years after execution of the Agreement to Construct Subdivision Improvements; and

WHEREAS, the Developer must execute and deliver to the City an Agreement and an acceptable financial guarantee to provide funds for constructing the sidewalk improvements in case the Developer does not complete the construction as required;

THEREFORE, the City and the Developer agree:

1. Sidewalk Construction Deadline. Developer has obtained a sidewalk variance, as shown in the attached Exhibit "A", which is a copy of the Development Review Board's letter regarding the variance granted. Developer agrees to utilize the City's sidewalk permit process and complete the sidewalks to the satisfaction of the City by February 23, 1988, 19_____ ("Sidewalk Construction Deadline").

25×

2. Financial Guarantee. Developer will provide a financial guarantee in an amount of not less than 125% of the cost of constructing the sidewalk improvements within the Subdivision, as determined by the City. The financial guarantee must be irrevocable and may be in the form of a bond, letter of credit, escrow deposit or other acceptable pledge of liquid assets payable to the City at any time within the sixty (60) days immediately following the Sidewalk Construction Deadline. To meet the Subdivision Ordinance requirements, the Developer has acquired or is able to acquire the following "Financial Guarantee":

Type of Financial Guarantee: Bond #FB014884
Amount: $ 1,035,684.60 Financial Institution or Surety Providing Guarantee: The Fairmont Insurance Company
Inclusive Dates of Guarantee (In case of default, City must be able to call on Financial Guarantee for the 60 days immediately following Sidewalk Construction Deadline.):
February 23, 19 88 through April 23, 19 88
Additional Information: Bond No. FB014884
This Bond submitted with Subdivision Improvement Agreement dated 6/10/86. for Heritage East Unit 5, City Project No. 2864

3. Default. If the Developer fails or neglects to fulfill its obligations under this Agreement, the City shall have the right to construct or cause the sidewalk improvements to be constructed as shown on the plat referred in the first page of this Agreement and the plat and specifications approved by the City. The Developer as principal and the surety or sureties shall be jointly and severally liable to pay to, and indemnify the City for the total cost of construction, including, but not limited to engineering, legal and contingent costs, together with any damages, either direct or consequential, which the City may sustain as a result of the failure of the Developer to perform all of the terms of this Agreement. The City shall have the unconditional right to call upon the Financial Guarantee for the purposes specified, up to the amount specified in the Guarantee.

4. Completion, Acceptance and Release. The Developer shall report completion of sidewalk construction in writing to the City. The Developer shall submit a City standard plan sheet of the overall site showing the location and size of the sidewalks constructed. The plan shall be drafted in accordance with Chapter 27 of the Development Process Manual, Volume 2. The plan shall be certified by an independent civil engineer or land surveyor who is practicing in accordance with 61-23-1 et seq (N.M.S.A. 1978 Comp.)

The City shall inspect the sidewalks to verify accuracy of the plans. Upon verification of the improvements, the City

25x

0000 0000 0747

shall issue a release of financial guarantee and release of Sidewalk Variance Agreement no later than sixty (60) days after the verification.

5. Conveyance. When the sidewalks have been constructed, if the City does not own the real property upon which the sidewalks are constructed, the Developer shall convey to the City the real property and property rights required by the City, together with the improvements, free and clear of all claims, encumbrances and liens, before the City will release the financial guarantee and Sidewalk Variance Agreement. Conveyance may be by dedication on the final plat of the Subdivision.

6. Assignment. This Agreement shall not be assigned until and unless both parties hereto and the financial institution or surety which has provided the Financial Guarantee for completion of the sidewalk improvements have given their express written consent to the assignment. If assigned, this Agreement shall extend to and be binding upon the successors and assigns of the party to this Agreement.

7. Conveyance of Subdivision, Replacement of Developer and Guarantee. If the Subdivision, or any part thereof, is sold, conveyed or assigned, the City will not release the Developer from its obligations under this Agreement, nor will it release the Financial Guarantee, and the City will continue to hold the Developer responsible for construction of the sidewalk improvements, until a successor in interest to the Developer has: A. entered into a replacement Sidewalk Variance Agreement with the City; and B. posted an acceptable replacement financial guarantee. When the replacement agreement and replacement financial guarantee have been provided to the City by the Developer's successor in interest, the City will release the Developer from the Developer's Agreement to Construct Subdivision Improvements and will release the Developer's Sidewalk Construction Financial Guarantee.

8. Request for Extension. If, in this Agreement, Developer has requested a Sidewalk Construction Deadline which is less than two (2) years from execution of the Subdivision Improvements Agreement, the Developer may request that the Sidewalk Construction Deadline and Financial Guarantee be extended for an additional period of time agreed upon by the City and the Developer, not to exceed two (2) years from execution of the Subdivision Improvements Agreement. The form of the Financial Guarantee Extension and the amount must be approved by the City, but shall not exceed 125% of the City's estimate of the cost of construction at the time Developer requests an extension.

25×

9. Conflict in Terms. If there is a conflict between the terms and conditions of this Agreement and the terms and conditions of any other document referred to herein, the terms and conditions of this Agreement shall govern.

10. Form Not Changed. The Developer agrees that changes to the wording of this form are not binding upon the City unless initialed by the Developer and approved and signed by the City Legal Department in writing on this form.

DEVELOPER - BELLAMAH COMMUNITY DEV.

By: D.T. Robertson
Name: D.T. Robertson
Title: Senior Vice President and Regional Manager

CITY OF ALBUQUERQUE, NEW MEXICO

By: Gene Romo
GENE ROMO
Chief Administrative Officer

APPROVED:

By: Walter H. Nickerson, Jr., City Engineer
Utility Development Division
Engineering Group-Public Works Dept.

(EXHIBIT "A" ATTACHED)

STATE OF New Mexico)
) ss.
COUNTY OF Bernalillo)

The foregoing instrument was acknowledged before me this 27th day of February, 1987, by [individual's name:] D.T. Robertson, [title:] Senior Vice President & Regional Mgr. of [Developer's name:] Bellamah Community Development.

(S E A L)

Jane L. Borkey
NOTARY PUBLIC

My commission expires: 6-5-90

OFFICIAL SEAL
JANE L. BORKEY
NOTARY PUBLIC - STATE OF NEW MEXICO
Notary Public Filed with Secretary of State
My Commission Expires 6-5-90

STATE OF NEW MEXICO)
) ss.
COUNTY OF BERNALILLO)

The foregoing instrument was acknowledged before me this 12th day of March, 1987, by GENE ROMO, Chief Administrative Officer of the City of Albuquerque.

(S E A L)

Priscilla Phillips
NOTARY PUBLIC

My commission expires: 3-17-90

25×

0000 0000 0749

EXHIBIT "C"

On-site sidewalk - Unit 5 to be constructed by individual builders
SIDEWALK VARIANCE 86-12

P-42 Portland Cement Concrete Sidewalk (4" thick)	SF	1.43	53774	76,897.39
TOTAL				76,897.39
			x	1.25
		BOND AMOUNT		96,121.74

ENGINEER'S ESTIMATE OF COST TO CONSTRUCT SIDEWALKS
WITH 25% MARK UP. PRICES PER CITY ENGINEER'S STANDARD UNIT PRICES

IN ACCORDANCE w/
ORIGINAL ~~SUBMITTAL~~
ESTIMATE 2864
O.K. x me
3/5/87

25x

0000 0000 0750

THIS MICROIMAGE IS THE BEST POSSIBLE REPRODUCTION DUE TO THE POOR QUALITY OF THE ORIGINAL DOCUMENT.

City of Albuquerque
P.O. BOX 1293 ALBUQUERQUE, NEW MEXICO 87103

878

MAYOR
KEN SCHULTZ

CHIEF ADMINISTRATIVE OFFICER
GENE ROMO

DEPUTY CAO PUBLIC SERVICES
FRANK MARTINEZ

DEPUTY CAO PLANNING/DEVELOPMENT
BILL MUELLER

March 19, 1986

Gardner, Mason & Associates, Inc.
2127 Menaul, NE
Albuquerque, NM 87107

REF: SV-86-12
DRB-86-143
(NE)

Gardner, Mason & Associates, Inc., agent for Bellamah Community Development request a Sidewalk Variance on Lots 1 - 58 and 1 - 8, Heritage East #5, located between Jacobo Drive and Ventura Street, NE. (D-20) APPROVED WITH CONDITIONS

At the March 18, 1985, Development Review Board meeting, your request for a Sidewalk Variance was approved subject to the following conditions:

Conditions

1. The sidewalks along San Francisco and Ventura are not granted a variance

2. The construction of the internal sidewalks may be deferred until the earlier of the two following dates:

   a) Upon the completion of construction of the building structure on each lot or tract.

   b) Two years after Preliminary Plat approval, unless an extension thereof is granted by the Development Review Board.

3. Financial guarantees are required for all infrastructure improvements including sidewalks that are deferred.

If you have any question, please do not hesitate to contact this office.

Richard Dineen

Richard Dineen, Chairman
Development Review Board

cc: Traffic Engineering
City Engineering
Transportation
File

25×10

0000 0000 0751

Bond No. FB014884

FILED WITH CITY CLERK'S OFFICE
3-18-87

SUBDIVISION BOND

KNOW ALL MEN BY THESE PRESENTS: That we Bellamah Community Development, A New Mexico General Partnership as Principal, and Fairmont Insurance Company a corporation organized and existing under and by virtue of the laws of the State of California and authorized to do business in the State of New Mexico, as Surety, are held and firmly bound unto the City of Albuquerque, in the penal sum of One Million, Thirty Five Thousand, Six Hundred Eighty Four and 60/100--($1,035,684.60)Dollars, the payment of which well and truly to be made, and each of us bind ourselves, our and each of our heirs, executors, administrators, successors and assigns jointly, and severally, firmly by these presents.

NOW, THEREFORE, the condition of the above obligation is such that:

WHEREAS, the above bounden Principal is the owner of and/or is interested in or developing land and premises known as Heritage East Unit V, City Project No. 2864 and,

WHEREAS, said subdivision is subject to the provisions and conditions of the ordinance of the City of Albuquerque known as the Subdivision Ordinance, which ordinance interalia requires the installation of various street and other improvements by said Principal; and

WHEREAS, under said Subdivision Ordinance the said Principal in Heritage East, Unit V, City Project No. 2864 Subdivision is required "as a part of his responsibility" to install and construct the following improvements:

Heritage East, Unit V, City Project No. 2864, All Construction shall be performed in accordance with the Agreement to Construct Subdivision Improvements entered into between Bellamah Community Development and the City of Albuquerque, as recorded in the office of the Clerk of Bernalillo County, New Mexico, at Miscellaneous Book 361 A, Pages 204 through 220.

NOW, THEREFORE, if the above bounden Principal does not complete construction of the said described improvements and facilities and perform the work hereinabove specified to be performed, all on or before February 23, 1988 than the City can call on this obligation until April 23, 1988 at which time this obligation shall be null and void.

25×10 32×10

0000 0000 0752

IN WITNESS WHEREOF, these presents have been executed

this 23rd day of April, 1986.

PRINCIPAL

Bellamah Community Development, A New Mexico General Partnership

By: Shirley A. Williams
Its: President

By: Barry D. Peterson
Its: Controller

SURETY Fairmont Insurance Company

By: Anne E. Adams

Anne E. Adams, Attorney-in-fact

ATTEST:

Brigitte Walker

Subscribed and sworn to before me this 23rd day of April, 1986.

Joan Marie Kelley
Notary Public

My Commission Expires:

11-1-89

APPROVED AS TO FORM ONLY:

Adela W. Karny
Assistant City Attorney

James B. Zeigler
City Attorney

*NOTE: Power of Attorney for Surety needs to be attached.

Revised 3/86

25× 32×

0000 0000 0753

FAIRMONT INSURANCE COMPANY

Burbank, California

POWER OF ATTORNEY

KNOW ALL MEN BY THESE PRESENTS:

That FAIRMONT INSURANCE COMPANY, a California Corporation, does hereby make, constitute and appoint

ROGER A. HILL, RONNIE J. FORGUS, ANNE E. ADAMS, MOLLY A. REED,
JOYCE COOGLER

as its true lawful Attorney(s)-in-Fact, with full power and authority, for and on behalf of the Company as surety, to execute and deliver and affix the seal of the Company thereto, if a seal is required, bonds, undertakings, recognizances, consents of surety or other written obligations in the nature therof, as follows:

Any and all bonds, undertakings, recognizances, consents of surety or other written obligations in the nature thereof,

and to bind FAIRMONT INSURANCE COMPANY thereby, and all of the acts of said Attorney(s)-in-Fact, pursuant to these presents, are hereby ratified and confirmed.

This appointment is made under and by authority of the following Bylaws of the Company, which Bylaws are now in full force and effect:

ARTICLE IV, Section 13. ATTORNEYS-IN-FACT AND AGENTS. The chairman of the board, the president, the vice president, the chief financial officer, or the secretary of the corporation may appoint attorneys-in-fact or agents with power and authority, as defined or limited in their respective powers of attorney, for and on behalf of the corporation to execute and deliver, and affix the seal of the Corporation thereto, bonds, undertakings, recognizances, consents of surety or other written obligations in the nature thereof and any of said oficers may remove any such attorney-in-fact or agent and revoke the power and authority given to him or her.

ARTICLE IV, Section 14. AUTHORITY TO BIND. Any bond, undertaking, recognizance, consent of surety or written obligation in the nature thereof shall be valid and binding upon the corporation when signed by the chairman of the board, the president, the vice president, the chief financial officer, or the secretary of the corporation and duly attested and sealed, if a seal is required, by the secretary or assistant secretary, or shall be valid and binding upon the corporation when duly executed and sealed, if a seal is required, by a duly authorized attorney-in-fact or agent, pursuant to and within the limits of the authority granted by his or her power of attorney.

This power of attorney is signed and sealed by facsimile under and by the authority of the following Resolution adopted by the Board of Directors of FAIRMONT INSURANCE COMPANY at a meeting duly called and held on the 4rd day of October, 1983:

RESOLVED that the signature of any officer authorized by the Bylaws, and the seal of the corporation, may be affixed by facsimile to any power of attorney or special power of attorney or certification of either given for the execution of any bond, undertaking, recognizance consent of surety or other written obligation in the nature thereof; such signature and seal, when so used, being hereby adopted by the corporation as the original signature of such officer and the original seal of the corporation, to be valid and binding upon the corporation with the same force and effect as though manually affixed.

IN WITNESS WHEREOF, FAIRMONT INSURANCE COMPANY has caused these presents to be signed by its proper officer and its corporate seal to be hereunto affixed this 22nd day of March of 1985

FAIRMONT INSURANCE COMPANY INCORPORATED APR. 10 1970 CALIF.

FAIRMONT INSURANCE COMPANY

By

Signature Henry F. Wright, Vice President

Printed in U.S.A.

25× 32×

0000 0000 0754

State of California
County of Los Angeles } ss.

Henry F. Wright, personally known to me, was by me duly sworn, and did depose and say: that he/she resides in the State of California; that he/she is the duly elected Vice President of FAIRMONT INSURANCE COMPANY, the corporation described in and which executed the above instrument; that he/she knows the seal of said corporation; that the seal affixed to said instrument is such corporate seal; that it was so affixed by authority of his/her office under the Bylaws of said corporation, and that he/she signed his/her name thereto by like authority.

Subscribed and sworn to me this 22nd day of March, 1985.

OFFICIAL SEAL
HARRIET LAMBELL
NOTARY PUBLIC — CALIFORNIA
PRINCIPAL OFFICE IN
LOS ANGELES COUNTY
My Commission Expires Apr. 27, 1988

Harriet Lambell
Notary Public in and
for said County and State.

CERTIFICATION

I, Trude A. Tsujimoto, the Assistant Secretary of FAIRMONT INSURANCE COMPANY, certify that the foregoing power of attorney and the above quoted Sections 13. and 14. of Article IV of the Bylaws have not been abridged or revoked and are now in full force and effect.

Signed and Sealed at Burbank, California, this 23rd day of April, 19 86.

FAIRMONT INSURANCE COMPANY
INCORPORATED
APR. 10
1970
CALIF.

Trude Tsujimoto
Title: Assistant Secretary

Originated by: William R. Lambert
Surety Manager

Date of Origin: 5/29/85

25× 32×

0000 0000 0755

D20103C

D.R.B Case No. 85-159

D.R.C. Project No.-------

Date Submitted 3-18-86

EXHIBIT "D"
to subdivision Improvements Agreement

D.R.B REQUIRED INFRASTRUCTURE LISTING
for HERITAGE EAST UNIT 5

Following is a summary of Public/Private Infrastructure required to be constructed or financially guaranteed to be constructed for the above development.

SIZE	TYPE IMP.	LOCATION	FROM	TO
I. ONSITE IMPROVEMENTS				
A. Paving Improvements				
32'FF	Res. Pavt.	Calhoun Drive	Quintana Dr.	San Francisco Rd
32'FF	Res. Pavt.	Hagerman Avenue	Quintana Dr.	Calhoun Drive.
32'FF	Res. Pavt.	Wallace Avenue	Quintana Dr.	Calhoun Drive
32'FF	Res. Pavt.	Meriwether Avenue	Thornton Ave.	Calhoun Drive
32'FF	Res. Pavt.	Thornton Avenue	Quintana Dr.	Calhoun Drive
32'FF	Res. Pavt.	Mabry Avenue	Jacobo Drive.	Calhoun Drive
40'FF	Res. Pavt.	Jacobo Drive	Quintana Dr.	San Francisco Rd
B. Curb and Gutter Improvements				
8"	Std Conc.	Calhoun Dr.(both sides)	Quintana Dr.	San Francisco
8"	Std Conc.	Hagerman Dr.(both Sides)	Quintana Dr.	Calhoun Dr.
8"	Std Conc.	Wallace Avenue(both Sides)	Quintana Dr.	Calhoun Dr.
8"	Std Conc.	Meriwether Ave(both sides)	Thornton Dr.	Calhoun Dr.
8"	Std Conc.	Thornton Avenue(both sides)	Quintana Dr.	Calhoun Dr.
8"	Std Conc.	Mabry Avenue(both sides)	Jacobo Dr.	Calhoun Dr.
8"	Std Conc.	Jacobo Drive. (both sides)	Quintana Dr.	San Francisco
C. Sidewalk Improvements				
4'	Sidewalk	Calhoun Dr.(both sides)	Quintana Dr.	San Francisco
4'	Sidewalk	Hagerman Dr.(both Sides)	Quintana Dr.	Calhoun Dr.
4'	Sidewalk	Wallace Avenue(both Sides)	Quintana Dr.	Calhoun Dr.
4'	Sidewalk	Meriwether Ave(both sides)	Thornton Dr.	Calhoun Dr.
4'	Sidewalk	Thornton Avenue(both sides)	Quintana Dr.	Calhoun Dr.
4'	Sidewalk	Mabry Avenue(both sides)	Jacobo Dr.	Calhoun Dr.
4'	Sidewalk	Jacobo Drive. (both sides)	Quintana Dr.	San Francisco
4'	Sidewalk	Quintana Ave.(north side)	Ventura St.	Park
4'	Sidewalk	Quintana Ave.(south side)	ventura St.	Jacobo Dr.
D. Sanitary Sewer Improvements				
8"	SAS	Calhoun Dr.	Quintana Dr.	San Francisco

25x

0000 0000 0756

SIZE	TYPE IMP.	LOCATION	FROM	TO
8"	SAS	Hagerman Dr.	Quintana Dr.	Calhoun Dr.
8"	SAS	Wallace Avenue	Quintana Dr.	Calhoun Dr.
8"	SAS	Meriwether Ave	Thornton Dr.	Calhoun Dr.
8"	SAS	Thornton Avenue	Quintana Dr.	Calhoun Dr.
8"	SAS	Mabry Avenue	Jacobo Dr.	Calhoun Dr.
8"	SAS	Jacobo Drive.	Quintana Dr.	San Francisco
8"	SAS	Easement L16,B7	Ventura St.	Calhoun Dr.

E. Water Line Improvements

8"	Water	Calhoun Dr.	Quintana Dr.	San Francisco
6"	Water	Hagerman Dr.	Quintana Dr.	Calhoun Dr.
6"	Water	Wallace Avenue	Quintana Dr.	Calhoun Dr.
6"	Water	Meriwether Ave	Thornton Dr.	Calhoun Dr.
6"	Water	Thornton Avenue	Quintana Dr.	Calhoun Dr.
8"	Water	Mabry Avenue	Jacobo Dr.	Calhoun Dr.
8"	Water	Jacobo Drive.	Quintana Dr.	San Francisco

F. Drainage Improvements

(1) Storm Sewer

42"	Storm sewer	Calhoun Dr.	Quintana Dr.	Meriwether Av
18"	Storm sewer	Calhoun Dr.	Hagerman Intersection	
18"	Storm sewer	Calhoun Dr.	Wallace Intersection	
18"	Storm sewer	Calhoun Dr.	Meriwether Intersection	
Sing.	Type A CB	Calhoun Dr.	Meriwether Intersection	
Dble.	Type B CB	Calhoun Dr.	Wallace Intersection	
Sing.	Type A CB	Calhoun Dr.	Hagerman Intersection	

(2) Valley Gutter

6'	VG	Quintana Dr.	Calhoun Intersection
6'	VG	Quintana Dr.	Hagerman Intersection
6'	VG	Quintana Dr.	Wallace Intersection
6'	VG	Quintana Dr.	Thornton Intersection
6'	VG	Quintana Dr.	Jacobo Intersection
6'	VG	Calhoun Dr.	Hagerman Intersection
6'	VG	Calhoun Dr.	Wallace Intersection
6'	VG	Calhoun Dr.	Meriwether Intersection
6'	VG	Calhoun Dr.	Thornton Intersection
6'	VG	Thornton Ave.	Meriwether Intersection

(3) Retaining Wall (Private Infrastructure)

4'-6'	Ret Wall	Block 7	Back line lots 1 through 24
~~4'-6'~~	~~Ret Wall~~	~~Block 5~~	~~Between lots 1 and 2~~
~~4'-6'~~	~~Ret Wall~~	~~Block 5~~	~~Between lots 2 and 3~~
~~4'-6'~~	~~Ret Wall~~	~~Block 5~~	~~Between lots 3 and 4~~
~~4'-6'~~	~~Ret Wall~~	~~Block 5~~	~~Between lots 2 and 10~~
4'-6'	Ret Wall	Block 4	Back line lots 23 through 27
~~4'-6'~~	~~Ret Wall~~	~~Block 4~~	~~Between lots 21 and 22~~
~~4'-6'~~	~~Ret Wall~~	~~Block 4~~	~~Back line lot 3~~
~~4'-6'~~	~~Ret Wall~~	~~Block 2~~	~~Between lots 7 and 8~~
~~4'-6'~~	~~Ret Wall~~	~~Block 2~~	~~Between lots 8 and 9~~

25×10

0000 0000 0757

SIZE	TYPE IMP.	LOCATION	FROM	TO
~~4'-6'~~	~~Ret Wall~~	~~Block 2~~	~~Between lots 9 and 10~~	

II. OFFSITE IMPROVEMENTS

A. Paving Improvements

25'FF	Art. Pavt.	Ventura St.	Quintana Dr.	San Francisco Dr
12'x100'	Turn Bay	Ventura St.	Rough Rider	100' South
12'x100'	Turn Bay	Ventura St.	Oppurtunity	100' South
12'x100'	Turn Bay	Ventura St.	San Francisco	100' North
12'x100'	" "	" "	Quintana Dr.	100' "

B. Curb and Gutter Improvements

8"	Std Conc.	Ventura St.(E. side)	Quintana Dr	San Francisco Dr
6"	Med Conc	Ventura St.(median)	Quintana Dr	San Francisco Dr

C. Valley Gutter

6'	VG	San Francisco Dr.	Calhoun Intersection
6'	VG	San Francisco Dr.	Jacobo Intersection

D. Sidewalk Improvements

6'	Sidewalk	Ventura St.	Domingo Baca	San Francisco Dr.
~~6'~~ 4'	Sidewalk	San Francisco Dr.	Ventura Dr	Jacobo Dr

Prepared by:----------

Name: Dorthy Chavez-Dolan

Firm : Gardner, Mason Associates

****

Development Review Board Member Approvals

3-18-86		3-18-86			
Traffic	Date	WUD	Date	Parks Rec	Date
3-18-86		3/18/86			
DRB Chairman	Date	City Engineer/AMAFCA	Date		

25×

0000 0000 0758

#8864 8384

AGREEMENT FORM (Procedure "B")

D20/D3C

86 52618

204

AGREEMENT TO CONSTRUCT SUBDIVISION IMPROVEMENTS

(PUBLIC & PRIVATE)

THIS AGREEMENT made this 10th day of June, 1986, by and between the City of Albuquerque, New Mexico (hereinafter referred to as "City") and Bellamah Community Development (hereinafter referred to as "Developer") pursuant to Section 6 of the City's Subdivision Ordinance (Enactment No. 56-1983, effective June 29, 1983).

WHEREAS, the Developer is developing certain lands within the City of Albuquerque, County of Bernalillo, State of New Mexico known as Heritage East Unit 5 Blocks 1-8 (hereinafter referred to as the "Subdivision"); and

WHEREAS, the Developer has submitted and the City has approved a preliminary plat identified as Heritage East Unit 5 Blocks 1-8 describing the Subdivision; and

WHEREAS, THE PRELIMINARY PLAT SUBMITTED BY THE Developer proposes both private and public infrastructure improvements within the subdivision; and

WHEREAS, Section 6 of the City's Subdivision Ordinance requires the Developer to install and construct certain public improvements at no cost to the City; and

WHEREAS, the City requires the execution of an Agreement to construct said public improvements, together with actual satisfactory construction or acceptable guarantees of construction as specified below, as a prerequisite to approval of a Final Plat of the Subdivision; and

WHEREAS, the Developer must obtain City approval of construction plans, specifications, and cost estimates for the improvements and upon City approval of such construction plans, specifications, and cost estimates the

25×

0000 0000 0759

City is prepared to issue the Developer a Work Order permitting the commencement of construction activities upon execution of this Agreement and payment of all required fees, all as set forth and specified in Exhibit "A", which is attached hereto and incorporated herein as if fully set forth in this Agreement; and

WHEREAS, the City is willing to inspect or monitor the private inspection of the improvements during the course of their construction and accept said improvements upon their satisfactory completion, all as set forth and specified in Exhibit "B", which is attached hereto and incorporated herein as is fully set forth in this Agreement; and

WHEREAS, the Developer financially guarantees the satisfactory completion of the infrastructure construction required herein and the payment of all labor and material costs and charges, all as set forth and specified in Exhibit "C", which is attached hereto and incorporated herein as if fully set forth in this Agreement;

NOW, THEREFORE, in consideration of the above, the City and the Developer hereby agree as follows:

1. The Developer shall, on or before the 23rd day of February, 19 88, complete to the satisfaction of the City the improvements required for the Subdivision as set forth, specified and referenced in Exhibit "A" attached hereto. The improvements which the Developer shall satisfactorily complete within the time limitation stated above are described and identified in Exhibit "D", which is attached hereto and incorporated herein as fully set forth in this Agreement.

25×10

0000 0000 0760

2. After execution of this Agreement, payment of all fees as specified in Exhibit "A" attached hereto, and, if applicable, delivery of the financial guarantee specified in Exhibit "C" attached hereto, the Developer shall be issued a Work Order by the City. The Developer shall advise the City Engineer in advance of the actual start of construction and arrange for all inspections required and specified in Exhibit "B" attached hereto. The Developer shall permit the City or other participating agencies to make such tests and inspections during the construction of the improvements and upon completion of the improvements as are necessary or desirable.

3. a) Prior to final acceptance of the completed improvements by the City, the Developer shall furnish to the City Engineer all documentation of the completion of construction as set forth and specified in Exhibit "A" attached hereto.

3. b) Prior to release of financial assurances, the Developer shall either provide Certification by a New Mexico registered Professional Engineer that the required Private Improvements have been constructed in compliance with approval plans and specifications or the Developer shall make necessary arrangements for Certification by the City Engineer that the required improvements are satisfactorily completed.

4. Until acceptance of the improvements by the City, the Developer shall be solely responsible for maintaining the premises being subdivided in a safe condition. The developer agrees to defend, indemnify and hold harmless the City and its officers, agents and employees from and against all suits, actions or claims of any character brought because of any injury or damage arising out of the design or construction of the improvements or by reason of any act or omission, or misconduct of the Developer, his agents, employees or the Engineer or Contractor or their agents or employees. The indemnity required hereunder shall not be limited by reason of the specifications of any particular insurance coverage in this

25×

0000 0000 0761

Agreement. Nothing herein is intended to impair any right or indemnity under the laws of the State of New Mexico.

5. The Developer shall procure or cause to be procured and maintain public liability insurance in the amount of not less than One Million Dollars ($1,000,000) combined single limit for accidents or occurrences which cause bodily injury, death or property damage to any member of the public resulting from any condition of the lands of the subdivision or improvements therein or the construction activities thereon.The insurance policy must name the City of Albuquerque, its employees, and elected officials, as their interest may appear, as additional insureds.The Developer shall maintain such insurance until acceptance of the improvements by the City. Any cancellation provision must provide that if the policy is cancelled prior to the expiration date hereof,materially changed, or not renewed, the issuing company will mail 30 days written notice to the City, attention City Engineer.The Developer shall furnish the City Engineer a certificate of said insurance prior to issuance of a Work Order for construction of the improvements.

6. If, at the time that construction of the Project is completed, the City does not own the real property on or in which the improvements are constructed, the Developer shall convey such real property and property rights as the City deems necessary, together with all improvements, to the City free and clear of all claims, encumbrances and liens prior to final acceptance of the improvements by the City. Conveyance may be appropriate dedication on the final plat of the subdivision.

7. At the time of acceptance of the completed improvements or any portion thereof by the City, the Developer shall furnish or cause to be furnished a bond or other suitable guarantee in a form and with a surety

25×

0000 0000 0762

satisfactory to the City to guarantee the completed project against defective materials and workmanship for a period of three (3) years following the date of acceptance by the City.

8. The City shall either perform or monitor the performance of inspections during the course of construction of the improvements and inspect the improvements upon their completion in a timely manner, all as set forth and specified in Exhibit "B" attached hereto.

9. The City shall designate a Construction Engineer and/or Inspector for this project.

10. The City shall make available at established reproduction costs for the use of the Developer or its agents all of it maps, records, laboratory tests, or other data pertinent to the work to be performed by the Developer or its agents pursuant to this Agreement and also any other maps, records, or other materials available to the City upon the City's request to any other public agency or body.

11. a) The City shall issue a Certificate of Completion and Acceptance for the Public Improvements upon final completion to the City's satisfaction of the Improvements as described in the plans and specifications as set forth and specified in Exhibit "A" attached hereto.

11. b) The City shall issue a Certificate of Completion for the Private Improvements upon final completion to the City's satisfaction of the Private Improvements as described in the plans specifications as set forth and specified in Exhibit "A" attached hereto.

12. If the Developer has requested Final Plat approval by the City prior to the actual construction of the improvements, the City will approve the Final Plat for recordation upon execution of this Agreement, payment of all fees specified in Exhibit "A" attached hereto, delivery of the financial

25×

0000 0000 0763

guarantee specified in Exhibit "C" attached hereto and full compliance with the City's Subdivision Ordinance.

13. This Agreement shall not be assigned except with the written consent of the parties hereto and the express written concurrence of any surety who has undertaken to guarantee the completion of the Improvements. If so assigned, this Agreement shall extend to and be binding upon the successors and assigns of the parties hereto.

14. In the event of the sale, conveyance, or assignment of the Subdivision or any portion thereof, the City will not release the Developer from its obligations under this Agreement and will continue to hold the Developer responsible for all Improvements until a successor in interest to the Developer has posted a suitable guarantee and entered into a Subdivision Improvement Agreement with the City. At such time as acceptable security has been posted by the Developer's successor in interest and the Agreement executed, the City will release the guarantee.

15. Should there be a conflict between the terms and conditions of this Agreement (with Exhibits A, B, C and D) and the terms and conditions of any other document referred to herein, the terms and conditions of this Agreement (with Exhibits A, B, C and D) shall govern.

IN WITNESS WHEREOF, the parties hereto have executed this Agreement as of the date first above written.

DEVELOPER- Bellamah Community Dev.	CITY OF ALBUQUERQUE, NEW MEXICO
D.T. Robertson, Senior Vice Pres. & Regional Manager	James N. Hicks Jr. Principal Engineer Design Division Public Works Dept.

25×

0000 0000 0764

AGREEMENT FORM (Procedure "B")
210

ATTEST:

City Clerk

Gene Romo

Chief Administrative Officer

REVIEWED BY:

Assistant City Attorney

City Attorney

STATE OF NEW MEXICO)
) ss.
COUNTY OF BERNALILLO)

The foregoing instrument was acknowledged before me this 23RD day of APRIL, 1986, by D.T.Robertson of Bellamah Community Development.

Notary Public

OFFICIAL SEAL
GAYLE C. PAGE
NOTARY PUBLIC - NEW MEXICO
NOTARY BOND FILED WITH SECRETARY OF STATE
My Commission Expires 10-13-87

My commission expires:

10-13-87

25×

0000 0000 0765

AGREEMENT FORM (Procedure "B")

211

STATE OF NEW MEXICO)
) ss.
COUNTY OF BERNALILLO)

The foregoing instrument was acknowledged before me this 10th day of June, 1986, by Gene Romo, Chief Administrative Officer of the City of Albuquerque.

Priscilla Phillips
Notary Public

My commission expires:
3-17-90

25×

0000 0000 0766

EXHIBIT "A"

TO SUBDIVISION IMPROVEMENT AGREEMENT
EXECUTED BY AND BETWEEN Bellamah Community Development (DEVELOPER)
AND THE CITY OF ALBUQUERQUE, NEW MEXICO (CITY) ON
THE 10th DAY OF June, 1986

1. COMMITMENT TO CONSTRUCT IMPROVEMENTS

The Developer shall construct in a manner satisfactory to the City the improvements listed in Paragraph 1 of the Subdivision Improvement Agreement and which are shown in greater detail on the Developer's proposed and approved Subdivision Improvements Plan, which was filed with the office of the City Engineer and identified as Project No. 2864.

2. DESIGN AND CONSTRUCTION METHODS

As soon as reasonably practical after approval of the Developer's Preliminary Plat of the Subdivision, the Developer shall submit to the City Engineer final construction plans, specifications, and cost estimates for the proposed public improvements. At this time, the Developer shall pay all fees required under Section 12.D of the City's Subdivision Ordinance and Paragraph 4 of this Exhibit.

The Developer has engaged Gardner, Mason & Associates, Inc. as Engineer(s) for the construction project, who are Registered Professional Engineers in the State of New Mexico. The Developer shall ensure that the Engineer(s), in such capacity, shall provide the following services prior to, during, and after construction of the improvements:

Gardner, Mason & Associates, Inc. will provide the following services:

Preparation of final quantity and cost estimates for contracting purposes.

Preparation of City approved plans and estimate.

25×

0000 0000 0767

The Developer shall ensure that the Engineer(s) perform all of the above services in a satisfactory manner and submit to the City Engineer any reports required by the City Engineer.

The Developer has engaged The Wylie Corporation as Contractor(s), who is properly licensed in the State of New Mexico. The Developer shall ensure that the Contractor(s), in such capacity, shall in a manner satisfactory to the City construct the improvements as shown on Developer's proposed Subdivision Improvements Plan (Project No. 2864), incorporating any change orders approved by the City Engineer, City of Albuquerque Interim Standard Specifications for Public Works Construction, 1985, and all other applicable laws, regulations, and policies. Construction surveying and testing shall be performed as set forth in Exhibit "B" of the Subdivision Improvement Agreement between Developer and the City.

3. COMPLETION OF CONSTRUCTION

The Developer shall report the completion of construction in writing to the City Engineer. Upon receipt of the report, the City Engineer or his representative shall visually inspect the public improvements to verify completion of construction according to plan. Subsequent to verification, the Developer shall submit to the City Engineer a "final acceptance package," which shall consist of the following documents:

a. "As-built" drawings of reproducible quality, depicting all construction of the public improvements as actually accomplished in the field and certified by a New Mexico Registered Professional Engineer or Land Surveyor, as appropriate,

b. A list of quantities of contract items in place, using the bid items in the City Engineer's Standard Estimated Unit Prices.

25×

0000 0000 0768

This list shall be divided into the following categories as applicable:

(1) Sanitary sewer items and quantities;

(2) Water service items and quantities;

(3) Street paving quantities;

(4) Street curb and gutter quantities; and

(5) Storm drainage improvements and quantities.

The City shall concurrently provide a written certification from the City Engineer that the construction has been performed in substantial compliance with the City of Albuquerque Interim Standard Specifications for Public Works Construction, 1985, and with the approved final plans and specifications for public improvements. If the City is acting as the Contractor for all or a portion of the improvements constructed pursuant to this Agreement, the City shall prepare its own final acceptance package documents for those improvements actually constructed by the City.

Upon receipt of the Developer's "final acceptance package," the City Engineer shall review it for completeness and accuracy. If the documentation has been satisfactorily completed, the City Engineer shall approve the package and issue a Certificate of Completion and Acceptance. Any financial guarantee provided by the Developer in accordance with Section 6.D.2 of the City's Subdivision Ordinance and as described in Exhibit "C" to the Subdivision Improvement Agreement between the Developer and the City shall be released no later than sixty (60) days after approval of the final acceptance package by the City Engineer.

4. PAYMENT OF FEES

Prior to issuance of a Work Order, the Developer shall pay to the City the following fees:

25×10

0000 0000 0769

Type of Fee	Amount
Engineering Fee	6% of construction cost (less any items built by separate permit)
Permit Fees	
Sidewalk Ordinance Fee	As required by City approved Engineers Estimate.
Excavation Ordinance Fee	As required by City approved Engineers Estimate

Prior to final acceptance of the improvements by the City, the Developer shall pay any other City fees which may have been incurred during the course of construction.

25×

EXHIBIT "B"
TO SUBDIVISION IMPROVEMENT AGREEMENT
EXECUTED BETWEEN Bellamah Community Development (DEVELOPER)
AND THE CITY OF ALBUQUERQUE (CITY)
ON THE 10th DAY OF June, 1986

1. CONSTRUCTION INSPECTION METHODS.

Inspection of the subdivision improvement construction shall be performed by Gardner, Mason & Assoc., Inc. on private facilities and by City of Albuquerque on public facilities both being New Mexico Registered Professional Engineers, in accordance with all applicable laws, ordinances and regulations. If said inspection is performed by an entity other than the City, the City may monitor said inspection and the Developer shall ensure that the inspecting entity provides all inspection results, reports and related data to the City as required for review. The City retains the right to perform its own general overall inspection of the construction project at any time prior to final acceptance of the improvements if deemed necessary or advisable by the City Engineer. For any inspections performed by the City, the Developer shall pay to the City a reasonable fee therefor.

2. CONSTRUCTION SURVEYING.

Construction surveying for the subdivision improvement project shall be performed by The Wylie Corp on private facilities and by The Wylie Corp on public facilities in accordance with all applicable laws, ordinances and regulations. If said construction surveying is performed by an entity other than the City, the City may monitor said construction surveying and the Developer shall ensure that the construction surveying entity provides all construction surveying field notes, plats, reports and related data to the City as required for review. If any construction surveying is performed by the City, the Developer shall pay to the City a reasonable fee therefor.

25×10

0000 0000 0771

3. FIELD TESTING.

Field testing of the subdivision improvement construction shall be performed by F.M. Fox & Assoc. on private facilities and by F.M. Fox & Assoc. on public facilities, each being a certified testing laboratory under the supervision of a New Mexico Registered Professional Engineer, in accordance with the technical standards contained in the applicable contract documents and all applicable laws, ordinances and regulations. If any field testing is performed by an entity other than the City, the City may monitor said field testing and the Developer shall ensure that the field testing entity provides all field testing results, reports and related data to the City as required for review. If any field testing is performed by the City, the Developer shall pay to the City a reasonable fee therefor.

4. RECORD TESTING.

Notwithstanding the provisions of Paragraph 3 above, the City retains the right to perform any and all record testing which may be deemed necessary or advisable by the City Engineer at the expense of the Developer.

25×

0000 0000 0772

EXHIBIT "C"
TO SUBDIVISION IMPROVEMENT AGREEMENT
EXECUTED BETWEEN Bellamah Community Developme (DEVELOPER)
AND THE CITY OF ALBUQUERQUE (CITY) ON
THE 10th DAY OF June, 198e.

1. PLAT APPROVAL STATUS

The Developer has/has not (circle one) requested final plat approval by the City prior to construction of the Subdivision Improvements described in Paragraph 1 of the Subdivision Improvement Agreement. If the Developer has not requested final plat approval prior to construction of the improvements, no financial guarantee is required by the City. However, the Developer understands and agrees that the City will not approve the Developer's proposed plat until the improvements are completed in accordance with the Agreement to which this document is attached as an Exhibit.

If the Developer has requested final plat approval prior to the construction of the improvements, a financial guarantee in an amount of not less than 125 percent of the costs of completing the improvements (as estimated by the City Engineer) is required pursuant to the City's Subdivision Ordinance. Said financial guarantee must be irrevocable in form and may be effected by a bond, letter of credit, escrow deposit, or other acceptable pledge of liquid assets payable to the City in the event of Developer's default under the Subdivision Improvement Agreement.

2. FINANCIAL GUARANTEE.

With respect to the Subdivision Improvement Agreement to which this document is attached as an Exhibit, the Developer has acquired or is able to acquire the following described financial guarantee (describe fully, indicate amount, identification number, names of bank or bonding entity, inclusive dates of guarantee, and all other relevant information):

25×

0000 0000 0773

Financial guarantee in the form of a Subdivision Bond, furnished by Fairmont Insurance Company, identification #FB014884 in the amount of $1,035,684.60. The inclusive date: February 23, 1988 - April 23, 1988.

The Developer understands and agrees that the original executed financial guarantee described above must be delivered to the City simultaneously with the City's execution of the Subdivision Improvement Agreement between Developer and the City; and must be in an amount of not less than 125 percent of the cost of completing the improvements, as estimated by the City Engineer.

In the event the Developer shall fail or neglect to fulfill his obligations under this Agreement, the City shall have the right to construct or cause to be constructed the Improvements specified herein, as shown on the Final Plat and in the plans and specifications as approved, and the Developer as Principal and the surety or sureties shall be jointly and severally liable to pay to and indemnify the City, the total cost to the City thereof, including but not limited to, engineering, legal, and contingent costs together with any damages, either direct or consequential, which the City may sustain on account of the failure of the Developer to carry out and execute all of the provisions of the Agreement to which this document is attached as an Exhibit. The City shall have the unconditional right to call upon the financial guarantee provided by the Developer described in this paragraph for the purposes specified and in the amounts enumerated in such guarantee.

3. PROCEDURES FOR REDUCTION OF FINANCIAL GUARANTEE UPON PARTIAL COMPLETION OF IMPROVEMENTS.

The Developer may request a reduction in the amount of financial guarantee upon partial completion of the subdivision improvements. To qualify for a financial guarantee reduction, the completed improvements must be of a free-standing nature, functionally independent of any uncompleted

25×

0000 0000 0774

improvements, and completed in substantial compliance with the subdivision improvement construction plans as determined by an inspection conducted by the City.

If the completed improvements meet the above requirements, the City Engineer will then estimate the cost of completing the remaining improvements. The Developer may then submit the following documents to the City for review and approval:

a) A revised financial guarantee in an amount of not less than 125 percent of the City Engineer's estimated cost of completing the remaining improvements;

b) A release of the original financial guarantee for execution by the City;

c) Documentation that the completed improvements and the land in which the completed improvements are located are subject to no liens, claims or other encumbrances;

d) A bond or other suitable instrument guaranteeing the completed improvements against defective materials and workmanship for a period of three (3) years as set forth in Paragraph 7 of the Subdivision Improvement Agreement between the Developer and the City.

Upon receipt of the above-described documents in forms acceptable to the City, the City shall issue a Certificate of Completion and Acceptance for the completed improvements and accepts the revised financial guarantee tendered by the Developer.

STATE OF NEW MEXICO
COUNTY OF BERNALILLO
FILED FOR RECORD

1986 JUN 11 PM 2:11

Mis 3614 PG 204-220

FLORES C. WALLER
CLERK & RECORDER

DEPUTY

Rev. 12/85

25×10

0000 0000 0775

FILED WITH CITY CLERK'S OFFICE

6/13/86 Bond No. FB014884

SUBDIVISION BOND

KNOW ALL MEN BY THESE PRESENTS: That we Bellamah Community Development, A New Mexico General Partnership as Principal, and Fairmont Insurance Company a corporation organized and existing under and by virtue of the laws of the State of California and authorized to do business in the State of New Mexico, as Surety, are held and firmly bound unto the City of Albuquerque, in the penal sum of One Million, Thirty Five Thousand, Six Hundred Eighty Four and 60/100--($1,035,684.60) Dollars, the payment of which well and truly to be made, and each of us bind ourselves, our and each of our heirs, executors, administrators, successors and assigns jointly, and severally, firmly by these presents.

NOW, THEREFORE, the condition of the above obligation is such that:

WHEREAS, the above bounden Principal is the owner of and/or is interested in or developing land and premises known as Heritage East Unit V, City Project No. 2864 and,

WHEREAS, said subdivision is subject to the provisions and conditions of the ordinance of the City of Albuquerque known as the Subdivision Ordinance, which ordinance interalia requires the installation of various street and other improvements by said Principal; and

WHEREAS, under said Subdivision Ordinance the said Principal in Heritage East, Unit V, City Project No. 2864 Subdivision is required "as a part of his responsibility" to install and construct the following improvements:

Heritage East, Unit V, City Project No. 2864, All Construction shall be performed in accordance with the Agreement to Construct Subdivision Improvements entered into between Bellamah Community Development and the City of Albuquerque, as recorded in the office of the Clerk of Bernalillo County, New Mexico, at Miscellaneous Book 361 A, Pages 204 through 220.

NOW, THEREFORE, if the above bounden Principal does not complete construction of the said described improvements and facilities and perform the work hereinabove specified to be performed, all on or before February 23, 1988 than the City can call on this obligation until April 23, 1988 at which time this obligation shall be null and void.

25× 32×

this 23rd day of April, 1986.

PRINCIPAL

Bellamah Community Development, A New Mexico General Partnership

By: Shirley A. Williams
Its: President

By: Barry D. Petersen
Its: Controller

SURETY Fairmont Insurance Company

By: Anne E. Adams

Anne E. Adams, Attorney-in-fact

ATTEST:

Brigitte Walker

Subscribed and sworn to before me this 23rd day of April, 1986.

Joan Marie Kelley
Notary Public

My Commission Expires:

11-1-89

APPROVED AS TO FORM ONLY:

Adelia W. Kearny
Assistant City Attorney

James B. Zeigler
City Attorney

*NOTE: Power of Attorney for Surety needs to be attached.

Revised 3/86

25× 32×

Burbank, California

POWER OF ATTORNEY

KNOW ALL MEN BY THESE PRESENTS:

That FAIRMONT INSURANCE COMPANY, a California Corporation, does hereby make, constitute and appoint

ROGER A. HILL, RONNIE J. FORGUS, ANNE E. ADAMS, MOLLY A. REED,
JOYCE COOGLER

as its true lawful Attorney(s)-in-Fact, with full power and authority, for and on behalf of the Company as surety, to execute and deliver and affix the seal of the Company thereto, if a seal is required, bonds, undertakings, recognizances, consents of surety or other written obligations in the nature therof, as follows:

Any and all bonds, undertakings, recognizances, consents of surety or other written obligations in the nature thereof,

and to bind FAIRMONT INSURANCE COMPANY thereby, and all of the acts of said Attorney(s)-in-Fact, pursuant to these presents, are hereby ratified and confirmed.

This appointment is made under and by authority of the following Bylaws of the Company, which Bylaws are now in full force and effect:

ARTICLE IV, Section 13. ATTORNEYS-IN-FACT AND AGENTS. The chairman of the board, the president, the vice president, the chief financial officer, or the secretary of the corporation may appoint attorneys-in-fact or agents with power and authority, as defined or limited in their respective powers of attorney, for and on behalf of the corporation to execute and deliver, and affix the seal of the Corporation thereto, bonds, undertakings, recognizances, consents of surety or other written obligations in the nature thereof and any of said oficers may remove any such attorney-in-fact or agent and revoke the power and authority given to him or her.

ARTICLE IV, Section 14. AUTHORITY TO BIND. Any bond, undertaking, recognizance, consent of surety or written obligation in the nature thereof shall be valid and binding upon the corporation when signed by the chairman of the board, the president, the vice president, the chief financial officer, or the secretary of the corporation and duly attested and sealed, if a seal is required, by the secretary or assistant secretary, or shall be valid and binding upon the corporation when duly executed and sealed, if a seal is required, by a duly authorized attorney-in-fact or agent, pursuant to and within the limits of the authority granted by his or her power of attorney.

This power of attorney is signed and sealed by facsimile under and by the authority of the following Resolution adopted by the Board of Directors of FAIRMONT INSURANCE COMPANY at a meeting duly called and held on the 4rd day of October, 1983:

RESOLVED that the signature of any officer authorized by the Bylaws, and the seal of the corporation, may be affixed by facsimile to any power of attorney or special power of attorney or certification of either given for the execution of any bond, undertaking, recognizance consent of surety or other written obligation in the nature thereof; such signature and seal, when so used, being hereby adopted by the corporation as the original signature of such officer and the original seal of the corporation, to be valid and binding upon the corporation with the same force and effect as though manually affixed.

IN WITNESS WHEREOF, FAIRMONT INSURANCE COMPANY has caused these presents to be signed by its proper officer and its corporate seal to be hereunto affixed this 22nd day of March of 1985

FAIRMONT INSURANCE COMPANY INCORPORATED APR. 10 1970 CALIF.

FAIRMONT INSURANCE COMPANY

By

Signature Henry F. Wright, Vice President

Printed in U.S.A.

25×10

State of California
County of Los Angeles } ss.

Henry F. Wright, personally known to me, was by me duly sworn, and did depose and say: that he/she resides in the State of California; that he/she is the duly elected Vice President of FAIRMONT INSURANCE COMPANY, the corporation described in and which executed the above instrument; that he/she knows the seal of said corporation; that the seal affixed to said instrument is such corporate seal; that it was so affixed by authority of his/her office under the Bylaws of said corporation, and that he/she signed his/her name thereto by like authority.

Subscribed and sworn to me this 22nd day of March, 1985.

OFFICIAL SEAL
HARRIET LAMBELL
NOTARY PUBLIC — CALIFORNIA
PRINCIPAL OFFICE IN
LOS ANGELES COUNTY
My Commission Expires Apr. 27, 1988

Harriet Lambell
Notary Public in and
for said County and State.

CERTIFICATION

I, Trude A. Tsujimoto, the Assistant Secretary of FAIRMONT INSURANCE COMPANY, certify that the foregoing power of attorney and the above quoted Sections 13. and 14. of Article IV of the Bylaws have not been abridged or revoked and are now in full force and effect.

Signed and Sealed at Burbank, California, this 23rd day of April, 1986.

FAIRMONT INSURANCE COMPANY
INCORPORATED
APR. 10
1970
CALIF.

Trude Tsujimoto
Title: Assistant Secretary

Originated by: William R. Lindsey
Surety Manager

Date of Origin: 5/29/85

25×10

RECEIVED
MAY 01 1986
HYDROLOGY SECTION

5/1/86
DRCD

Analysis of Catch Basins to the Left of ℄ at following Stations:

Sta 3+23 10' LT From MH

TC = 56.39 TC

ϕ = 18"

Q = 4.6 cfs

L = 10'

$$\frac{\left[\frac{4.6}{1.77}\sqrt{\frac{1.2+0.021(10)}{1.5^{1.2}}}\right]^2}{2\times 32.2} = H_1 = .1378$$

Sta 3+48 25' from 2nd Catch Basin

TC = 56.47 TC

ϕ = 18"

Q = 4.6 cfs

L = 25'

$$\frac{\left[\frac{4.6}{1.77}\sqrt{\frac{1.2+0.021(25)}{1.5^{1.2}}}\right]^2}{2\times 32.2} = H_1 = 0.1602$$

HGL @ Sta 3+23 = 55.28

Rim Elev @ " 55.93

G = 56.47 - 56.39 = 0.08

(1st catch basin) $V_1 = 1.33 + 1.2\frac{V^2}{2g} + d_1 = 1.33 + \frac{1.2(2.60)^2}{2\times 32.2} + 1.5 = 2.9563$ ft

2nd catch basin $V_2 = 1.33 + H_1 + 1.2\frac{V_2^2}{2g} + d_2 - G = 1.33 + .1602 + \frac{1.2(2.60)^2}{2\times 32.2} + 1.5 - 0.08 = 3.0365$ ft

From above calculations V_1, V_2

$V_2 - 0.5 > V_1 - G$

$3.0365 - 0.5 > 2.9563 - .08$

$2.5365 > 2.8763$

From design V_1 = 56.47 - 52.60 = 3.87

V_2 = 56.39 - 52.02 = 4.37

$V_2 - 0.5 > V_1 - G$

$4.37 - 0.5 > 3.87 - .08$

$3.87 > 3.79$

Free board $FB_2 = V_2 - d_2 - 1.2\frac{V_2^2}{2g} - 0.83 =$

(using V_2 calculated) = 1.5802

(using V_2 from design) = 1.9137

note both > 0.5

(MH Rim Elev 55.9)

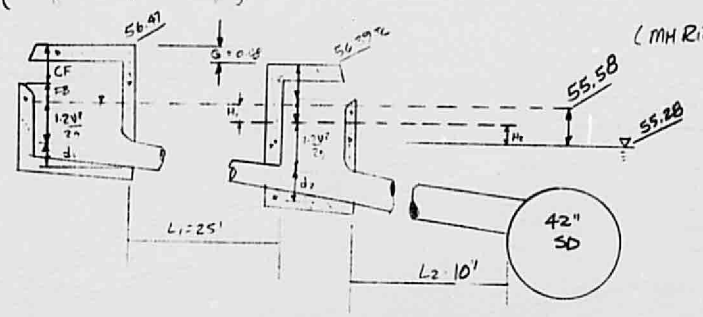

25×10 32×10

Analysis for Catch Basins to the Right of the ℄ at following STA:

Sta 3+23 26' RT From MH

TC = 56.39 TC

$\phi = 18"$

$Q = 4.6$ cfs

$L = 26'$

Sta 3+48 25' From 2nd Catch Basin

56.47 TC

$\phi = 18"$

$Q = 4.6$ cfs

$L = 25'$

$$Q = \frac{A\sqrt{2gH}}{\sqrt{1.2 + \frac{0.021L}{D^{1.2}}}}$$

$$Q\sqrt{1.2 + \frac{0.021L}{D^{1.2}}} = A\sqrt{2gH}$$

$$\frac{Q}{A}\sqrt{1.2 + \frac{0.021L}{D^{1.2}}} = \sqrt{2gH}$$

$$\frac{\left[\frac{Q}{A}\sqrt{1.2 + \frac{0.021L}{D^{1.2}}}\right]^2}{2g} = H$$

$$\frac{\left[\frac{4.6}{1.77}\sqrt{1.2 + \frac{0.021(26)}{1.5^{1.2}}}\right]^2}{2 \times 32.2} = H_2 \quad 0.1610$$

$$\frac{\left[\frac{4.6}{1.77}\sqrt{1.2 + \frac{0.021(25)}{1.5^{1.2}}}\right]^2}{2 \times 32.2} = H_1 \quad 0.1602$$

HGL @ Sta 3+23 = 55.28

Rim Elev = 55.93

$G = 56.47 - 56.39 = 0.08$

THIS MICROIMAGE IS THE BEST POSSIBLE REPRODUCTION DUE TO THE POOR QUALITY OF THE ORIGINAL DOCUMENT.

25×10 32×10

1st Catch Basin

Since $Q_{P.M}$ from report = 4.6 cfs

and $Q = VA$

$V_{avg.} = Q/A = 4.6/1.77 = 2.60$ fps { for both 1st, 2nd catch basin

(first catch basin) $V_1 = 1.33 + 1.2\,\frac{V^2}{2g} + d_1 = 1.33 + \frac{1.2(2.60)^2}{2\times32.2} + 1.5$

$= 2.9563$ ft

(2nd catch basin) $V_2 = 1.33 + H_1 + 1.2\,\frac{V_2^2}{2g} + d_2 - G = 1.33 + 0.1602 + \frac{1.2(2.60)^2}{2\times32.2} + 1.5 - 0.08$

$= 3.0365$ ft

$V_2 - 0.5 > V_1 - G$

From above calculations { V_1, V_2

$3.0365 - 0.5 > 2.9563 - 0.08$

$2.5365 > 2.8763$

From design { $V_1 = 5647 - 5260 = 3.87$, $V_2 = 5639 - 5202 = 4.37$

$V_2 - 0.5 > V_1 - G$

$4.37 - 0.5 > 3.87 - .08$

$3.87 > 3.79$

Freeboard $= FB_2 = V_2 \cdot d_2 - 1.2\,\frac{V_2^2}{2g} - 0.83 = 2.9879 - 1.5 - \frac{1.2(2.60)^2}{2\times32.2} - 0.83$

(using V_2 calculated)

$= 0.5316 \geq 0.5$

(using V_2 from design)

$= 4.37 - 1.5 - \frac{1.2(2.60)^2}{2\times32.2} - 0.83$

$= 1.9137 \geq 0.5$

(MH Sta 3+23)
(Rim Elev = 55.93)

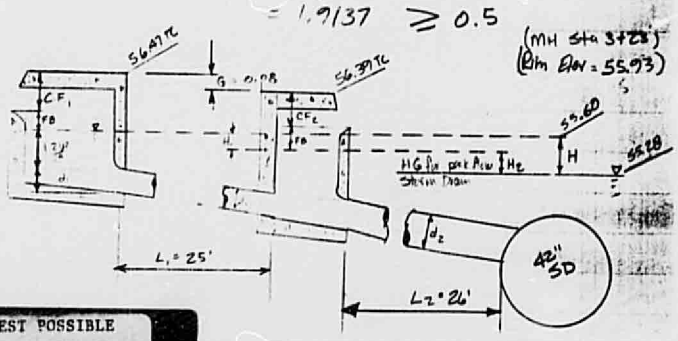

THIS MICROIMAGE IS THE BEST POSSIBLE REPRODUCTION DUE TO THE POOR QUALITY OF THE ORIGINAL DOCUMENT.

25× 32×

Analysis of Catch Basins to Left & Right of Following Station

Sta 6+25 LT
TC = 56.83 TC
ϕ = 18"
Q = 6 cfs
L = 10'

Sta 6+25 RT
TC = 56.83 TC
ϕ = 18"
Q = 6 cfs
L = 26

v-depth $\quad V = CF + 0.5 + 1.2 \frac{V^2}{2g} + \frac{d}{\cos S}$

$$V = 1.33 + 1.2 \frac{V^2}{2g} + d$$

$Q = VA \qquad V = Q/A = 6/1.77 = 3.40$ fps

$$V = 1.33 + 1.2 \frac{(3.40)^2}{2(32.2)} + 1.5 = 3.0448$$

H is too small to find on graph:

$$\frac{\left[\frac{Q}{A}\sqrt{\frac{1.2 + 0.021L}{D^{1.2}}}\right]^2}{2g} = H$$

$$\frac{\left[\frac{6}{1.77}\sqrt{\frac{1.2 + 0.021(10)}{1.5^{1.2}}}\right]^2}{2 \times 32.2} = .2379$$

From Design $V = 56.83 - 52.77 = 4.06 > 3.04$ ∴ OK

MH Rim Elev 56.37

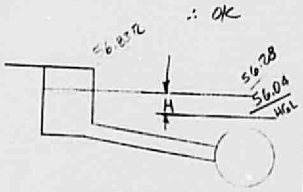

$$\frac{\left[\frac{6}{1.77}\sqrt{\frac{1.2 + 0.021(26)}{1.5^{1.2}}}\right]^2}{2 \times 32.2} = H = .2749$$

From Design
$V = 4.04 > 3.04$ ∴ OK

MH Rim Elev 56.37

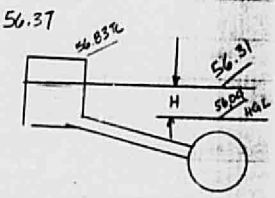

THIS MICROIMAGE IS THE BEST POSSIBLE REPRODUCTION DUE TO THE POOR QUALITY OF THE ORIGINAL DOCUMENT.

25× 32×

Analysis of Catch Basins to Right of ℄ @ Following Sta:

Sta 8+75 26' LT of MH
TC = 57.31 TC
ϕ = 18"
Q = 6.7 cfs
L = 26'

Sta 9+00 25' From 2nd Catch Basin
TC = 57.34 TC
ϕ = 18"
Q = 6.7 cfs
L = 25'

$G = 0.34 - 0.31 = 0.03$

$V = 6.7/1.77 = 3.79$ fps

$$H_2 = \frac{\left[\frac{6.7}{1.77}\sqrt{1.2 + \frac{0.031(26)}{1.5^{1.2}}}\right]^2}{2(32.2)} = 0.3428 \qquad H_1 = 0.3399$$

1st Catch Basin $V_1 = 1.33 + 1.2\frac{V^2}{2g} + d_1 = 1.33 + \frac{1.2(3.79)^2}{2(32.2)} + 1.5 = 3.0979$ fps

2nd Catch Basin $V_2 = 1.33 + H_1 + 1.2\frac{V^2}{2g} + d_2 - G = 1.33 + 0.3399 + \frac{1.2(3.79)^2}{2(32.2)} + 1.5 - 0.03$

$= 3.4078$

From above calculations $\begin{cases} V_1 \\ V_2 \end{cases}$

$V_2 - 0.5 > V_1 - G$

$3.4078 - .5 > 3.0979 - 0.03$

$2.9078 > 3.0679$

From design $\begin{cases} V_1 = 57.33 - 53.46 = 3.87 \\ V_2 = 57.31 - 52.94 = 4.37 \end{cases}$

$V_2 - 0.5 > V_1 - G$

$4.37 - 0.5 > 3.87 - 0.03$

$3.87 > 3.84$

Free board $FB_2 = V_2 - d_2 - 1.2\frac{V_2^2}{2g} - 0.83 =$

(using V_2 calculated) $= 0.8079 \geq 0.5$

(using V_2 from design) $= 1.7721 \geq 0.5$

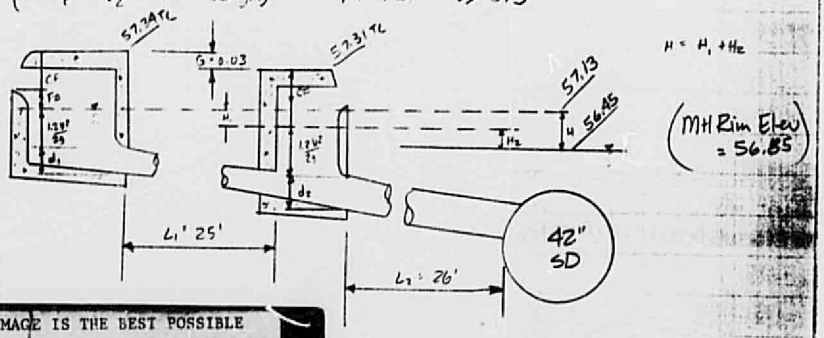

$H = H_1 + H_2$

(MH Rim Elev = 56.85)

THIS MICROIMAGE IS THE BEST POSSIBLE REPRODUCTION DUE TO THE POOR QUALITY OF THE ORIGINAL DOCUMENT.

25× 32×

Analysis of catchBasins to Left of ℄ @ Following Sta

Sta 8+75 10' LT of mil

TC = 57.31 TC

ϕ = 18"

Q = 6.7 cfs

L = 10'

G = .34 − .31 = .03

$V = 6.7/1.77 = 3.79$ fps

$$H_2 = \frac{\left[\frac{6.7}{1.77}\sqrt{\frac{1.2 + 0.021(10)}{1.5^{1.2}}}\right]^2}{2 \times 32.2} = 0.2967$$

Sta 9+00 25' From 2nd Basin

TC = 57.34 TC

ϕ = 18"

Q = 6.7 cfs

L = 25'

$$H_1 = \frac{\left[\frac{6.7}{1.77}\sqrt{\frac{1.2 + 0.021(25)}{1.5^{1.2}}}\right]^2}{2 \times 32.2} = .3399$$

First Catch Basin $V_1 = 1.33 + 1.2\frac{V^2}{2g} + d_1 = 1.33 + \frac{1.2(3.79)^2}{2(32.2)} + 1.5 = 3.0979$ fps

2nd Catch Basin $V_2 = 1.33 + H_1 + 1.2\frac{V_2^2}{2g} + d_2 - G = 1.33 + 0.3399 + 0.2679 + 1.5 - 0.03 = 3.4078$

From above calculations $\begin{cases} V_1 \\ V_2 \end{cases}$

$V_2 - 0.5 > V_1 - G$

$3.4078 - 0.5 > 3.0979 - .03$

$2.9078 \not> 3.0679$

From design $\begin{cases} V_1 = 57.33 - 53.46 = 3.87 \\ V_2 = 57.31 - 52.94 = 4.37 \end{cases}$

$V_2 - 0.5 > V_1 - G$

$4.37 - 0.5 > 3.87 - .03$

$3.87 > 3.84$

Freeboard $FB_2 = V_2 - d_2 - 1.2\frac{V_2^2}{2g} - 0.83 =$

(using V_2 calculations) $= 0.8099 \geq 0.5$

(using V_2 from design) $= 1.7771 \geq 0.5$

(MH Rim 56.85)

$H = H_1 + H_2$

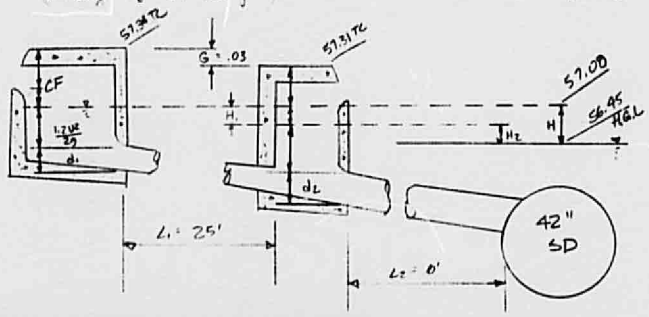

THIS MICROIMAGE IS THE BEST POSSIBLE REPRODUCTION DUE TO THE POOR QUALITY OF THE ORIGINAL DOCUMENT.

25×10 32×10

PLANS/PLATS ON FILE

FILE DESC: D20/D3C

PLANS/PLATS 7

25×10

25 × 10