PUBLIC WORKS/HYDROLOGY

E18/D12

0000 0000 2018

E18/D12

25×10

0000 0000 2079

CHAVEZ · GRIEVES
CONSULTING ENGINEERS, INC.
THE ENGINEERING FIRM OF CHOICE
5639 JEFFERSON STREET NE · ALBUQUERQUE, NEW MEXICO 87109 · PHONE (505) 344 4080 · FAX (505) 343 8759

21 June 1996

Bernie Montoya, P.E.
Hydrology Department
City of Albuquerque
P.O. Box 1293
Albuquerque, New Mexico 87103

RE: ADDITION AT RINCONADA SQUARE (Zone Atlas Page E-18)
ACADEMY ROAD, ALBUQUERQUE, NEW MEXICO
C-G PROJECT NUMBER: J06-112-0096

Dear Mr. Montoya:

We are submitting the following updated grading and drainage plan for building permit approval. As shown on this plan, a 779 square foot building addition will be replacing part of an existing flagstone patio. The impervious area on the property will not change as a result of this building addition. With a finished floor elevation of 5210.20 feet and a roof slope of 1/4"/1 ft toward the scupper on the south end of the building, the roof will drain south to the existing outdoor plaza. Similarily to the existing drainage pattern, this runoff will be detained and collected by the existing inlet in the plaza as shown on the plan. The amount of runoff from the area covering the building addition is 0.1 cfs. Refer to attached calculations.

If you have any questions regarding this submittal, please do not hesitate to contact me at 344-4080.

Sincerely

CHAVEZ-GRIEVES CONSULTING ENGINEERS, INC.

Jeanne Wolfenbarger

Jeanne Wolfenbarger, E.I.T.

Enclosures

JEANNE WOLFENBARGER
11030
6/21/96
REGISTERED PROFESSIONAL ENGINEER

Celebrating 15 Years of Engineering Leadership

25 × 10

0000 0000 2080

Printed June 21, 1996 (9:41am)

CHAVEZ - GRIEVES / CONSULTING ENGINEERS, inc.
5639 Jefferson Street NE, Albuquerque, New Mexico 87109 Phone (505) 344-4080 - Fax (505) 343-8759

RUNOFF CALCULATIONS - SIMPLIFIED PROCEDURE

By: JEANNE WOLFENBARGER
Project: RINCONADA SQUARE BUILDING ADDITION

Date: June 21, 1996
Zone Atlas Page: E-18

This procedure is in accordance with the City of Albuquerque Development Process Manual, Volume 2, Section 22.2, "Hydrology", peak discharge rate for small watersheds less than forty acres in size.

Precipitation Zone from Figure A-1: 3
Land treatment descriptions are in Table A-4.

1. RUNOFF RATE COMPUTATION

Use Equation A-10: $Q_P = Q_{PA} A_A + Q_{PB} A_B + Q_{PC} A_C + Q_{PD} A_D$

Values of Q_{pi} are from Table A-9, and are in CFS/acre. Area values are in acres.

BASIN	Q_{PA}	A_A	Q_{PB}	A_B	Q_{PC}	A_C	Q_{PD}	A_D	Q_P
EXISTING BASIN RATE OF RUNOFF (CFS)									
A	1.87	0	2.6	0	3.45	0	5.02	0.02	0.1
DEVELOPED BASIN RATE OF RUNOFF (CFS)									
A	1.87	0	2.6	0	3.45	0	5.02	0.02	0.1

25×10

0000 0000 2081

Printed June 21, 1996 (9:41am)

2. RUNOFF VOLUME COMPUTATION

Use Equation a-5 to compute weighted excess precipitation:

Weighted E = "E" = $(E_A A_A + E_B A_B + E_C A_C + E_D A_D)/(A_A + A_B + A_C + A_D)$

$(A_A + A_B + A_C + A_D) = \sum A_i$

Use Equation a-6 to compute the volume:

V_{360} = "E" x $(A_A + A_B + A_C + A_D)$ x 3630 feet^3/acre·inch

Values of E_i are from Table A-8, and are in inches. Area values are in acres.

BASIN	E_A	A_A	E_B	A_B	E_C	A_C	E_D	A_D	$\sum A_i$	"E"	V_{360}
EXISTING BASIN VOLUME OF RUNOFF (CUBIC FEET)											
A	0.66	0	0.92	0	1.29	0	2.36	0.02	0.02	2.36	171.34
DEVELOPED BASIN VOLUME OF RUNOFF (CUBIC FEET)											
A	0.66	0	0.92	0	1.29	0	2.36	0.02	0.02	2.36	171.34

V1440 = V360 + Ad * (P440-P360) / 12 in/ft
V1440 = 171.34 + 0.02 * (3.10-2.60) / 12 in/ft
V1440 = 171.34 cf

25×10

0000 0000 2082

City of Albuquerque
P.O. BOX 1293 ALBUQUERQUE, NEW MEXICO 87103

October 4, 1990

Victor Chavez, P.E.
Chavez-Grieves Consulting Engineers
4600-C Montgomery Boulevard, NE
Albuquerque, New Mexico 87109

RE: DRAINAGE PLAN FOR AN ADDITION & PAVING TO RINCONADA SQUARE
(E-18/D12) ENGINEER'S STAMP DATED SEPTEMBER 26, 1990

Dear Mr. Chavez:

Based on the information provided on your submittal of September 27, 1990, the above referenced plan is approved for Building Permit.

Please attach a copy of this plan to the construction sets prior to sign-off by Hydrology.

If I can be of further assistance, please feel free to call me at 768-2650.

Cordially,

for Bernard Montoya
Fred J. Aguirre, P.E.
Hydrologist

BJM:FJA/bsj
(WP+2207)

PUBLIC WORKS DEPARTMENT

Walter H. Nickerson, Jr., P.E.
Assistant Director Public Works

ENGINEERING GROUP

Telephone (505) 768-2500

AN EQUAL OPPORTUNITY EMPLOYER

25×

0000 0000 2083

DRAINAGE INFORMATION SHEET

PROJECT TITLE: Buncanada Square ZONE ATLAS/DRNG.FILE #: E-18/D12

LEGAL DESCRIPTION: Division Tr. 1 of Division of Land of D.R.C. Associates

CITY ADDRESS:

ENGINEERING FIRM: Chavez-Grieves CONTACT: Ray Gomez

ADDRESS: 4600-C Montgomery PHONE: 881-7376

OWNER: CONTACT:

ADDRESS: PHONE:

ARCHITECT: Claudio Vigil CONTACT: Jim Rhodes

ADDRESS: 825 Pennsylvania PHONE: 265-3002

SURVEYOR: CONTACT:

ADDRESS: PHONE:

CONTRACTOR: CONTACT:

ADDRESS: PHONE:

PRE-DESIGN MEETING:

X YES

___ NO

___ COPY OF CONFERENCE RECAP SHEET PROVIDED

DRB NO.

EPC NO.

PROJ. NO.

TYPE OF SUBMITTAL:

___ DRAINAGE REPORT

X DRAINAGE PLAN

___ CONCEPTUAL GRADING & DRAINAGE PLAN

X GRADING PLAN

___ EROSION CONTROL PLAN

___ ENGINEER'S CERTIFICATION

CHECK TYPE OF APPROVAL SOUGHT:

___ SKETCH PLAT APPROVAL

___ PRELIMINARY PLAT APPROVAL

___ SITE DEVELOPMENT PLAN APPROVAL

___ FINAL PLAT APPROVAL

X BUILDING PERMIT APPROVAL

___ FOUNDATION PERMIT APPROVAL

___ CERTIFICATE OF OCCUPANCY APPROVAL

___ ROUGH GRADING PERMIT APPROVAL

___ GRADING/PAVING PERMIT APPROVAL

___ OTHER _____ (SPECIFY)

SEP 27 1990
HYDROLOGY DIVISION

DATE SUBMITTED: Sept 27, 1990

BY: Ray Gomez

25 X

0000 0000 2084

DRAINAGE INFORMATION

PROJECT TITLE: Addition at Rinconada Square
ZONE ATLAS/DRNG. FILE #: E-18-Z / 412
DRB#: _____ EPC #: _____ WORK ORDER #: _____
LEGAL DESCRIPTION: North Academy Business Park
CITY ADDRESS: 6220 San Mateo Boulevard, NE

ENGINEERING FIRM: Chavez-Grieves
CONTACT: Jeanne Wolfenbarger, E.I.T.
ADDRESS: 5639 Jefferson NE
PHONE: 344-4080
OWNER: _____
CONTACT: _____
ADDRESS: _____
PHONE: _____
ARCHITECT: N/A
CONTACT: Joe Slagle
ADDRESS: _____
PHONE: 246-0870
SURVEYOR: _____
CONTACT: _____
ADDRESS: _____
PHONE: _____
CONTRACTOR: _____
CONTACT: _____
ADDRESS: _____
PHONE: _____

TYPE OF SUBMITTAL:

___ DRAINAGE REPORT
___ DRAINAGE PLAN
___ CONCEPTUAL GRADING & DRAINAGE PLAN
___ GRADING PLAN
___ EROSION CONTROL PLAN
___ ENGINEER'S CERTIFICATION
X OTHER (Approved Grading Plan with building addition)

PRE-DESIGN MEETING:

___ YES
X NO
___ COPY PROVIDED

CHECK TYPE OF APPROVAL SOUGHT:

___ SKETCH PLAT APPROVAL
___ PRELIMINARY PLAT APPROVAL
___ S. DEV. PLAN FOR SUB'D. APPROVAL
___ S. DEV. PLAN FOR BLDG. PRMT. APPROVAL
___ SECTOR PLAN APPROVAL
___ FINAL PLAT APPROVAL
___ FOUNDATION PERMIT APPROVAL
X BUILDING PERMIT APPROVAL
___ CERTIFICATE OF OCCUPANCY APPROVAL
___ GRADING PERMIT APPROVAL
___ PAVING PERMIT APPROVAL
___ S.A.D. DRAINAGE REPORT
X DRAINAGE REQUIREMENTS
___ OTHER

DATE SUBMITTED: June 21, 1996
BY: Jeanne Wolfenbarger, E.I.T.

25 × 10

0000 0000 2085

CHAVEZ—GRIEVES / CONSULTING ENGINEERS, INC.
4600 MONTGOMERY N.E., BUILDING C, #101
ALBUQUERQUE, NEW MEXICO 87109
(505) 881-7376

RECEIVED
SEP 27 1990
HYDROLOGY DIVISION

LETTER OF TRANSMITTAL

TO: COA - HYDROLOGY

DATE:

JOB #

RE: RINCONADA SQUARE

We are sending you ____ATTACHED ____UNDER SEPARATE COVER, the following items:

____SHOP DRAWINGS ____CHANGE ORDER ____SPECIFICATIONS
____COPY OF LETTER ____PLANS ____
____PRINTS ____SAMPLES X GRADING & DRAINAGE PLAN

COPIES	DATE	NO.	DESCRIPTION

THESE ARE TRANSMITTED as checked below:

X FOR APPROVAL ____SUBMIT____COPIES FOR DISTRIBUTION
____FOR YOUR USE ____RETURN____CORRECTED PRINTS
____AS REQUESTED ____RETURNED AFTER LOAN TO US
____FOR REVIEW AND COMMENT ____FOR BIDS DUE_____ 19____
____REVISE TO MATCH SHOP DRAWING STAMP ____

REMARKS:

COPY TO:

SIGNED: Ray P. Bonney

If enclosures are not as noted, kindly notify us at once.

Rev.2/89

25×10

0000 0000 2086

CITY OF
Albuquerque

June 26, 1996

Martin J. Chávez, Mayor

Mike Walla
Chavez-Grieves Consulting Engineers, Inc.
5639 Jefferson St. NW
Albuquerque, NM 87109

RE: DRAINAGE PLAN FOR AN ADDITION TO RINCONADA SQUARE (E18-D12) ENGINEER'S STAMP DATED 6/21/96.

Dear Mr. Walla:

Based on the information provided on your June 24, 1996 submittal, the above referenced site is approved for Building Permit.

Please attach a copy of this approved plan to the construction sets prior to sign-off by Hydrology.

If I can be of further assistance, please feel free to contact me at 768-2667.

Sincerely,

Bernie J Montoya

Bernie J. Montoya, CE
Engineering Associate

BJM/dl

c: Andrew Garcia
File

25×10

0000 0000 2087

PLANS/PLATS ON FILE

FILE DESC: E18/D12

PLANS/PLATS 2

25×10

0000 0000 2088

25 × 10

HYDROLOGY E18/D12 2 PLANS

E18/D12

2 Plans

Tom Mann Associates, Inc.
Engineers
81 DALLAS, N.E. • ALBUQUERQUE • NEW MEXICO • 87110 • 505-265-5611

3124
May 3, 1985

RECEIVED
MAY 03 1985
PH0090
HYDROLOGY SECTION

Mr. Bernie Montoya
City of Albuquerque
P.O. Box 1293
Albuquerque, NM 87103

Re: Parking Lot with Tract "D" of North Academy Business Park
(E-18/D34)

Dear Bernie:

I received your letter dated April 26, 1985, addressed to Tony Thomas concerning the above grading and drainage. A review of our records indicates that this is not one of our projects. I believe that project was designed by Chavez-Greives.

We will be happy to help in any way that we can, but I believe that Chavez-Greives should respond along with Summit to this letter.

If you have any questions or comments, please do not hesitate to call.

Sincerely,

TOM MANN & ASSOCIATES, INC.

Thomas T. Mann, Jr., P.E.
President

TTM:ra
Encls.
xc: Roland Vogel/encls.

City of Albuquerque
P.O. BOX 1293 ALBUQUERQUE, NEW MEXICO 87103

DESIGN HYDROLOGY SECTION
123 Central NW, Albuquerque, NM 87102
(505) 766-7644

April 26, 1985

Tony Thomas
Summit Construction
900 Hazeldine, SE
Albuquerque, New Mexico 87106

RE: PARKING LOT WITH TRACT "D" OF NORTH ACADEMY BUSINESS PARK
(E-18/D34)

Dear Mr. Thomas:

Based on our past phone conversations relating to the referenced drainage plan, it is important that your firm look into the problem as soon as possible. Per our approved drainage plan dated April 18, 1985, all off-site flows were to be intercepted and routed towards the proposed double "D" drop inlet. Our field inspection has revealed that this is not the case. In order to provide fair, effective enforcement of drainage policy, it is imperative that this matter be addressed as soon as possible.

A copy of this letter will be routed to the City Attorney's office in the event that no response is received from your firm.

If you have any questions or comments regarding this project, please feel free to call me at 766-7644.

Cordially,

Bernie J. Montoya

Bernie J. Montoya, C.E.
Engineering Assistant

cc: Steven K. Schroll; Project Engineer
Tom Mann & Associates

City Attorney's Office

BJM/bsj

DH0019

BJM ——

Tom Mann Associates, Inc.
Engineers
811 DALLAS, N.E. • ALBUQUERQUE • NEW MEXICO • 87110 • 505-265-5611

31241
April 12, 1985

RECEIVED
APR 17 1985
HYDROLOGY SECTION

Bernie Montoya
City of Albuquerque
Hydrology Department
P.O. Box 1293
Albuquerque, NM 87103

Re: Dinerstein Project - North Academy Business Park

Dear Bernie:

As per our recent discussions, the parking lot constructed within Tract 'D' of the North Academy Business Park was not built according to the approved drainage plan prepared by Chaves-Grieves. All flows entering the parking lot were supposed to be contained on site and directed toward the drop inlet on the westerly end of the site. As-built conditions indicate that flows are being discharged onto Tract 'C', North Academy Business Park (Dinnerstein Apartments). It is my understanding that you will be turning this matter over to the City Attorney.

Thank you for your assistance with this matter. If you should have any questions or comments concerning this project, please do not hesitate to call.

Sincerely,

TOM MANN & ASSOCIATES, INC.

Steven K. Schroll

Steven K. Schroll
Project Engineer

SKS:ra
xc: Roland Vogel

City of Albuquerque
P.O. BOX 1293 ALBUQUERQUE, NEW MEXICO 87103

DESIGN HYDROLOGY SECTION
123 Central NW, Albuquerque, NM 87102
(505) 766-7644

April 11, 1984

Mr. Victor Chavez
Chavez-Grieves
4520 Montgomery Boulevard NE
Albuquerque, NM 87108

REF: GRADING AND DRAINAGE PLAN FOR ANN CLARK SHOPPING CENTER (E18-D34)
RECEIVED MARCH 22, 1984

Dear Vic:

The above referenced plan is approved. However, prior to release of a building permit, you will need to submit to this office a revised plan. The revised plan is to include a vicinity map, a legend, as per the DPM and your signature and the revision date.

Should you have any questions or comments, please contact me at 766-7644.

Yours truly,

Billy J. Goolsby

Billy J. Goolsby, PE
City/County Flood Plain Admin.

BJG:mrk

Plan dated 4/18/84 Submitted and approved

CHAVEZ GRIEVES / CONSULTING ENGINEERS, INC.
4520 MONTGOMERY BLVD., SUITE 3
ALBUQUERQUE, N.M. 87109
(505) 881-7376

LETTER OF TRANSMITTAL

E18-D36

TO: BILLY GOOLSBY
CITY OF ALBUQUERQUE
HYDROLOGY DEPT.

DATE: APRIL 18, 1984
JOB NO. K01-111-00
RE: COMMERCIAL CENTER-SAN MATEO BLVD. & ACADEMY RD. PARKING LOT

GENTLEMEN:

We are sending you X ATTACHED ___ UNDER SEPARATE COVER the following items:

__ SHOP DRAWINGS __ CHANGE ORDER __ SPECIFICATIONS
__ COPY OF LETTER __ PLANS __ _____
X PRINTS __ SAMPLES

COPIES	DATE	NO.	DESCRIPTION
1			SITE PLAN, GRADING PLAN & DETAILS
1			1 of 3 to 3 of 3 DROP INLET CONNECTION TO EXISTING CULVERT (SPECIAL ORDER 19)

THESE ARE TRANSMITTED as checked below:

__ FOR APPROVAL
X FOR YOUR USE
__ AS REQUESTED
__ FOR REVIEW AND COMMENT
__ APPROVED AS SUBMITTED
__ APPROVED AS NOTED
__ _____

__ RETURNED FOR CORRECTIONS
__ RESUBMIT ___ COPIES FOR APPROVAL
__ SUBMIT ___ COPIES FOR DISTRIBUTION
__ RETURN ___ CORRECTED PRINTS
__ PRINTS RETURNED AFTER LOAN TO US
__ FOR BIDS DUE _____ 19

APR 19 1984
HYDROLOGY SECTION

REMARKS:

THESE ARE COPIES OF THE FINAL DRAWINGS. PLEASE LOOK THROUGH OVER TO MAKE SURE WE HAVE MET WITH YOUR REQUIREMENTS.
THANK YOU.

COPY TO: FILE

SIGNED: BRIAN TONG

If enclosures are not as noted, kindly notify us at once.

INFORMATION SHEET

PROJECT TITLE Ann Clark Shopping Center TYPE OF SUBMITTAL Drainage Plan

ZONE ATLAS PAGE NO. ~~E~~ 18-Z D-34 CITY ADDRESS N/A

LEGAL DESCRIPTION Division of TRACT 1 of DIVISION OF LAND OF D.R.C. ASSOCIATES, a partnership, Albuquerque, New Mexico

ENGINEERING FIRM Chavez-Grieves Cons. Eng.,Inc. CONTACT Victor J. Chavez

ADDRESS 4520 Montgomery N.E., Suite 3 PHONE (505) 881-7376

OWNER Ann Clark CONTACT Ann Clark

ADDRESS Rio Grande Boulevard N.W. PHONE (505) 344-2573

ARCHITECT W.C. Kruger and Associates CONTACT Phil Custer

ADDRESS 1st Interstate Bank Bldg., Ste.1100 PHONE (505) 842-8663

SURVEYOR Albuquerque Surveying Co., Inc. CONTACT Fred Sanchez

ADDRESS 2119 Menaul N.E. PHONE (505) 884-2036

CONTRACTOR Summit Construction Co. CONTACT Tony Thomas

ADDRESS 900 Hazeldine S.E. PHONE (505) 842-8113

PRE-DESIGN MEETING:

___ YES
X NO
___ COPY OF CONFERENCE RECAP SHEET PROVIDED

Where? Vicinity map needed

PLEASE CHECK TYPE OF APPROVAL EXPECTED WITH THIS SUBMITTAL

___ SKETCH PLAT APPROVAL
___ PRELIMINARY PLAT APPROVAL
X SITE DEVELOPMENT PLAN APPROVAL
___ FINAL PLAT APPROVAL
___ BUILDING PERMIT APPROVAL
___ CERTIFICATE OF OCCUPANCY APPROVAL
___ ROUGH GRADING PERMIT APPROVAL
X GRADING/PAVING PERMIT APPROVAL
___ OTHER _____ (SPECIFY)

RECEIVED MAR 22 1984 HYDROLOGY SECTION

DATE SUBMITTED March 22, 1984

BY: Victor J. Chavez, P.E.

FILE COPY

City of Albuquerque

P.O. BOX 1293 ALBUQUERQUE, NEW MEXICO 87103

October 11, 1983

Mr. Victor Chavez
Chavez Grieves/Consulting Engineers, Inc.
6121 Indian School Road NW Suite 220
Albuquerque, NM 87110

REF: ANN CLARK SHOPPING CENTER DRAINAGE PLAN (E18-D34)

Dear Mr. Chavez:

The above mentioned plan, as submitted 10/11/83, is hereby approved. Please be sure that copies of the latest drawing as well as "Drainage Facilities Within City Right-of-Way" are included in the permit sets prior to submittal to Hydrology.

I would like to reiterate my concerns about the lack of detail for the surface overflows from the inter core areas. If these areas are not properly constructed, there will be problems when it comes to the final inspection.

If you have any questions on the above, please feel free to call me at 766-7644.

Sincerely,

John Armstrong
Civil Engineer/Hydrology

JA:mrk

cc: W.C. Kruger & Associates

CHAVEZ GRIEVES / CONSULTING ENGINEERS, INC.

6121 INDIAN SCHOOL RD., N.E. SUITE 220
ALBUQUERQUE, N.M. 87110
PH. (505) 881-7376

John Armstrong
Hydrology Department
City of Albuquerque
P.O. Box 1293
Albuquerque, New Mexico 87103

RE: Ann Clark Shopping Center Drainage Plan
(E18-034)

Dear John;

Attached are two copies of the referenced drainage plan with the grade changes requested in our meeting of October 3, 1983. The changes are highlighted as revision 1. Also attached are two copies of the approved Special Order 19 drawings for the connection to the existing Bear Arroyo box culvert.

Your assistance has been appreciated.

Sincerely,

Victor J. Chavez

Victor J. Chavez, P.E.

RECEIVED
OCT 11 1983
HYDROLOGY SECTION

VJC/dls
Encl.

City of Albuquerque
P.O. BOX 1293 ALBUQUERQUE, NEW MEXICO 87103

August 31, 1983

Mr. Victor J. Chavez
Chavez-Grieves
6121 Indian School Road NE
Albuquerque, NM 87110

REF: ANN CLARK SHOPPING CENTER DRAINAGE PLAN (E18-D34)

Dear Mr. Chavez:

These are my comments on the above mentioned plan:

disregard this item. Phone to Vic Chavez 9/02/83 JA

1. It appears that a flooding problem exists downstream at the freeway. Unless you can show that you will not adversely affect this situation, ponding will be required on this site.

2. Need to show grades and details for the central core of the project. Show doors, roof drains and drainage swales.

3. Drop inlets and storm drains should be designed using DPM, Sec. 22.3.

4. Show dimensions on the concrete box culvert.

5. Show that offsite flows are not blocked and how you propose to handle them.

6. Attached please find a copy of the DPM checklist with specific items marked in red.

7. Approved copies of Drainage Improvements Within City Right-of-Way must be attached to the permit sets prior to Hydrology sign-off.

If you have any questions on the above, please call me at 766-7644.

Sincerely,

John Armstrong
Civil Engineer/Hydrology

JA:mrk

DRAINAGE REPORT AND DRAINAGE PLAN CHECKLIST

Drainage Report: A drainage report is a comprehensive analysis of the drainage control, flood control and erosion control constraints on and impacts resulting from a proposed platting, development or construction project. Drainage reports are required for subdivisions containing more than 10 lots or constituting 5 acres or more, platting or construction within a designated flood hazard area and for any platting or development adjacent to a major arroyo. Engineer's certification may be required if not strongly recommended for major projects, projects requiring numerous drai[illegible] inspections during construction, projects in flood hazard areas and phased [illegible]ects.

Drainage Plan: A short detailed presentation require[illegible] simple development approvals. Drainage plans are prepared with [illegible]etailed grading plan and address both on-site and off-site drain[illegible], flood control and erosion control issues. Drainage plans are requ[illegible]ed [illegible] building permits, site development plans and landscaping plans for developments involving less than 5 acres.

Although the checklist and information required for both the Drainage Report and Drainage Plan are quite similar, they are not one in the same. Basically the difference between the two is one of detail. The same report which was accepted for the subdivision of a large tract of land may not be adequate for the construction of each subdivided parcel.

NOTE: The following checklist is intended to be used as a guide for preparing your drainage report or plan to meet any or all drainage requirements. It is only a guide. Some items may not be applicable to your particular project; some items may require more detail.

GENERAL INFORMATION:

1. Completed Information Sheet - see Information Sheet.
2. Planning History - planning and zoning action history.
3. Professional's stamp with signature and date.
   A. Engineer who prepared the drainage report or plan.
   B. Engineer or surveyor who performed the survey.
4. Flood Hazard - delineation of site on pertinent Flood Hazard Boundary Map.
5. Watershed Soils - delineation of site and contributing off-site watersheds on SCS Bernalillo County Soil Survey Maps.
6. Soils - soils investigation report for ponding within 15 ft. from planned or existing structure or closer than 15 ft. from the property line minus the required setback on adjacent property. For ponds 18" deep or less, water may be impounded adjacent to street ROW but not closer than 10' from pavement. For ponds deeper than 18", water shall not pond closer than 15' to the street pavement or curb and gutter.
7. Drainage Report or Drainage Plan - two copies
8. Erosion Control Plan - see Erosion Control Plan Checklist

OFF-SITE CONDITIONS

9. Watershed Area - delineation of off-site contributing watersheds on City of Albuquerque Ortho-Topo Area Maps at scale 1" = 200' or 1" = 500'.
10. Storm Flows - quantification of off-site rate of flow caused by contributing watersheds for the:
    A. 10 year frequency storm.
    B. 100 year frequency storm.
11. Flow Depth and Velocity
    A. Off-site flow velocities determined.
    B. Off-site flow depths determined.
    C. Locations indicated for A and B above.
12. Other Conditions - discussion of any off-site conditions or drainage facilities that affect site drainage.
13. Proposed Treatment - adequate treatment of off-site flows including:
    A. Definition of required drainage facilities.
    B. Location and configuration of facilities defined in A above.
    C. Verification of adequacy of downstream systems
14. Rights-of-Way and Easements - delineation of R/W and/or easement configuration necessary to accommodate #13 above.

ON-SITE CONDITIONS:

15. Flow Volumes and Rates - calculations showing on-site undeveloped and developed flow volumes and rates.
16. Flow Depth and Velocity:
    A. On-site flow velocities determined.
    B. On-site flow depths determined.
    C. Locations indicated for A and B.
17. Proposed Treatment - adequate treatment of on-site flows including:
    A. Definition of required drainage facilities.
        1. Pond volume calculations including routing if applicable.
        2. Positive discharge of pond with required rate and outlet calculations.
        3. Pond emergency spillway calculations.
        4. Pond fencing required for depths greater than 18".
        5. Pond landscaping provisions and commitments.
        6. Pond maintenance provisions and commitments if required. See Drainage Covenant.
        7. Channel characteristics including flow depths and velocities.
        8. Storm sewer characteristics including capacity and hydraulic grade line calculations.
        9. Hydraulic characteristics of other storm drainage facilities listed in AMAFCA Resolution.
    B. Verification of adequacy of downstream systems
18. Rights-of-Way and Easements - delineation of R/W and/or easement configuration necessary to accommodate #17 above.
19. Nuisance Waters - adequate provisions for nuisance waters provided on-site

PLAN DRAWINGS:

20. Drafting Standards:
    A. North Arrow.
    B. Scales - recommended engineering scales:
        1. 1" 20' for sites less than 5 acres
        2. 1" = 50' for sites 5 acres or more
    C. Legend - see DPM Manual, Vol. 2, tables 27.3a - 27.3d for recommended standard symbols
    D. Plan drawings size 24" x 36"
21. Site Description:
    A. Vicinity map showing location of the development in relation to well-known landmarks, municipal boundaries and atlas map index number.
    B. Legal description or current plat.
22. Bench Marks - location, description and elevation of the:
    A. Albuquerque Control Survey Vertical Datum.
    B. Temporary bench mark on-site.
23. Existing Conditions:
    A. Existing Contours - vertical intervals for contour maps shall not exceed the following:
        1. One foot intervals for slopes under 1% with sufficient spot elevations at key points to adequately show the site's topography.
        2. Two feet for slopes between 1% and 5%.
        3. Five feet for slopes in excess of 5%.
    B. Spot elevations adequately showing conditions on-site.
    C. Contours and spot elevations extending a minimum of 25' beyond property line.
    D. Identification of all existing structures [illegible] site or on adjacent property extending a minimum of [illegible] line with particular attention to retaining and ga[illegible]
    E. Identification of all existing drainage facilitie[illegible] located on-site or on adjacent property.
    F. Pertinent elevation(s) of structures and facilities defined in D and E above with Mean Sea Level designation.
    G. Indication of all existing easements and rights-of-way on or adjacent to the site with dimensions and purpose shown.
    H. Existing City top of curb and flow line elevations with Mean Sea Level designation.
24. Proposed Conditions:
    A. Proposed Contours - vertical intervals for contour maps shall not exceed the following:
        1. One foot intervals for slopes under 1% with sufficient spot elevations at key ponts to adequately show the site's topography.
        2. Two feet for slopes between 1% and 5%.
        3. Five feet for slopes in excess of 5%.
    B. Indication of all proposed easements and rights-of-way on or adjacent to the site with dimensions and purpose shown.

C. City Engineer approved street and alley grades when site abuts a dedicated unpaved street or alley. These grades are available at no charge from the City Engineer's Office. An advance request will expedite your project. NOTE: There may be a delay depending upon current workload to have the City Engineer supply grades. However, to expedite the plans, the City Engineer will review grades provided by a Professional Engineer.

D. Internal contributory drainage areas, including roof areas, outlined on plan.

E. City approved street and/or alley grades.

F. Flow lines defined by arrows and spot elevati[illegible] with Mean Sea Level designation.

G. Pond(s) 100 year water surface elevation outli[illegible] and [illegible]ted on plan.

H. Notes defining property line, asphalt sidewalk[illegible] areas, ponding areas, and all other areas whose definit[illegible] would increase clarity.

I. Finish building floor elevation(s) with complete Mean Sea Level designation.

J. Slopes (cut or fill) with height of less than 3', not steeper than 2:1. Slopes with height greater than 3', not steeper than 3:1.

K. Elevation of property line at least .33' above adjacent top of curb.

L. Retaining walls indicated for vertical grade changes greater than 18".

M. Details of ponds, swales, rundowns, curb cuts, water blocks, emergency spillways, retaining walls, pond outlets, safety fences, slopes, and all other significant drainage structures with contours, cross-sections, spot elevations and supporting calculations when appropriate. All cross-sections must be drawn to standard engineering scale or adequately dimensioned.

N. The following phases of development o[illegible] in sequential order of construction with a p[illegible] (see Erosion Control Plan Checklist):
   1. Rough grading
   2. Phased development
   3. Construction phase
   4. Permanent phase

O. Required spot elevations for the standard City drivepad.

P. Proposed construction of private storm drain improvements within the City right-of-way.

CHAVEZ GRIEVES / CONSULTING ENGINEERS, INC.

6121 INDIAN SCHOOL RD., N.E. SUITE 120
ALBUQUERQUE, N.M. 87110
PH. (505) 881-7376

LETTER OF TRANSMITTAL

TO: ATTN: Fred Aguirre
City of Albuquerque
P.O. Box 1293
Albuquerque, New Mexico 87103

DATE: August 12, 1983
JOB NO. K01-111-00
RE: Academy and San Mateo
Shopping Center for Ann Clark

GENTLEMEN:

We are sending you X ATTACHED ___ UNDER SEPARATE COVER the following items:

__ SHOP DRAWINGS __ CHANGE ORDER __ SPECIFICATIONS
__ COPY OF LETTER __ PLANS X Information Sheet
X PRINTS __ SAMPLES

COPIES	DATE	NO.	DESCRIPTION
4		C-2	Grading, Drainage Plan and Details

RECEIVED
AUG 12 1983
ENGINEERING

THESE ARE TRANSMITTED as checked below:

X FOR APPROVAL
__ FOR YOUR USE
X AS REQUESTED
__ FOR REVIEW AND COMMENT
__ APPROVED AS SUBMITTED
__ APPROVED AS NOTED
__ RETURNED FOR CORRECTIONS
__ RESUBMIT ___ COPIES FOR APPROVAL
__ SUBMIT ___ COPIES FOR DISTRIBUTION
__ RETURN ___ CORRECTED PRINTS
__ PRINTS RETURNED AFTER LOAN TO US
__ FOR BIDS DUE _____ 19___

REMARKS:

COPY TO: File

SIGNED: Victor J. Chavez, P.E.

If enclosures are not as noted, kindly notify us at once.

INFORMATION SHEET

PROJECT TITLE Ann Clark Shopping Center TYPE OF SUBMITTAL Drainage Plan

ZONE ATLAS PAGE NO. E-18-Z-034 CITY ADDRESS N/A

LEGAL DESCRIPTION Division of TRACT 1 of DIVISION OF LAND OF D.R.C. ASSOCIATES, a partnership Albuquerque, New Mexico

ENGINEERING FIRM Chavez-Grieves Cons.Eng.,Inc. CONTACT Victor J. Chavez

ADDRESS 6121 Indian School Road N.E.,#220 PHONE (505) 881-7376

OWNER Ann Clark CONTACT Ann Clark

ADDRESS Rio Grande Boulevard N.W. PHONE (505) 344-2573

ARCHITECT W.C. Kruger and Associates CONTACT Phil Custer

ADDRESS 1st Interstate Bank Bldg.,Ste.1100 PHONE (505) 842-8663

SURVEYOR Albuquerque Surveying Comaphy, Inc. CONTACT Fred Sanchez

ADDRESS 2119 Menaul N.E. PHONE (505) 884-2036

CONTRACTOR Summit Construction Company CONTACT Tony Thomas

ADDRESS 900 Hazeldine S.E. PHONE (505) 842-8113

RECEIVED
AUG 12 1983
ENGINEERING

DATE SUBMITTED August 12, 1983

BY Victor J. Chavez, P.E.

CITY OF ALBUQUERQUE

DRAINAGE FACILITIES WITHIN CITY RIGHT-OF-WAY

Excavation Permit # 07967

VICTOR J. CHAVEZ
STATE OF NEW MEXICO
NO. 5713
REGISTERED PROFESSIONAL ENGINEER

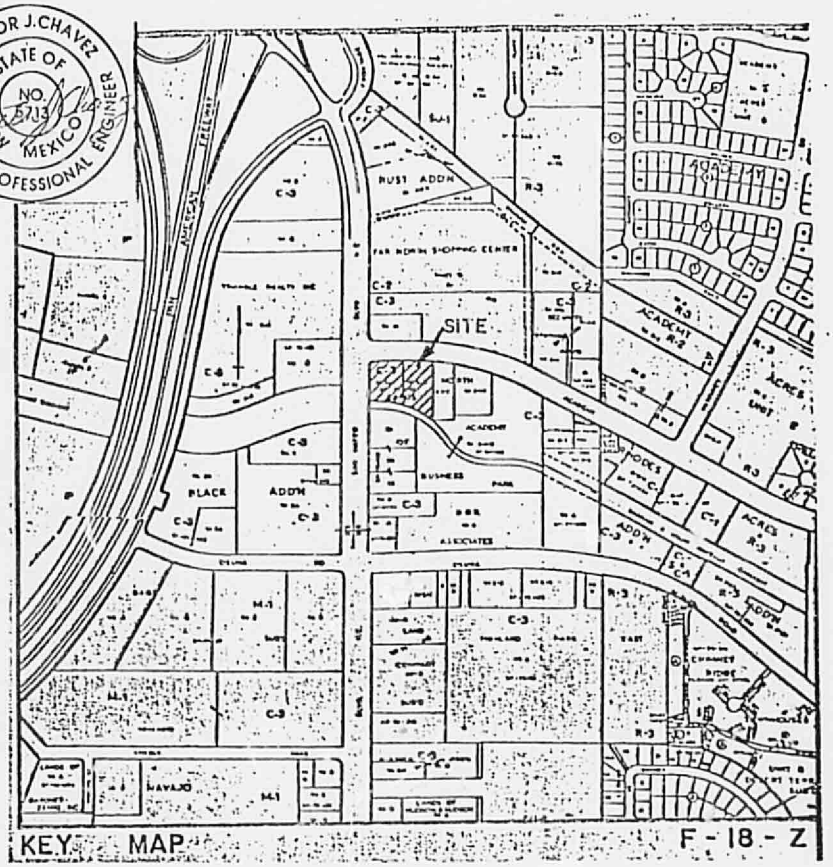

F18-D12

NOTICE TO CONTRACTOR

1. An excavation/construction permit will be required before beginning any work within City right-of-way. An approved copy of these plans must be submitted at the time of application for this permit.

2. All work detailed on these plans to be performed, except as otherwise stated or provided hereon, shall be constructed in accordance with "Contract Documents for City-Wide Utilities and Cash Paving No. 31 "

3. Two working days prior to any excavation, contractor must contact Line Locating Service, 765-1234, for location of existing utilities.

4. Prior to construction, the contractor shall excavate and verify the horizontal and vertical locations of all obstructions. Should a conflict exist, the contractor shall notify the engineer so that the conflict can be resolved with a minimum amount of delay.

5. Backfill compaction shall be according to RESIDENTIAL street use.

C-111

APPROVALS	NAME	DATE	TITLE: R.C.P. TAP IN DETAIL 6220 SAN MATEO N.E.
A.C.E./DESIGN	[illegible]	15 Sep 83	
INSPECTOR	[illegible]	11-2-83	PERMIT NO. MAP

CITY OF ALBUQUERQUE

DRAINAGE FACILITIES WITHIN CITY RIGHT-OF-WAY

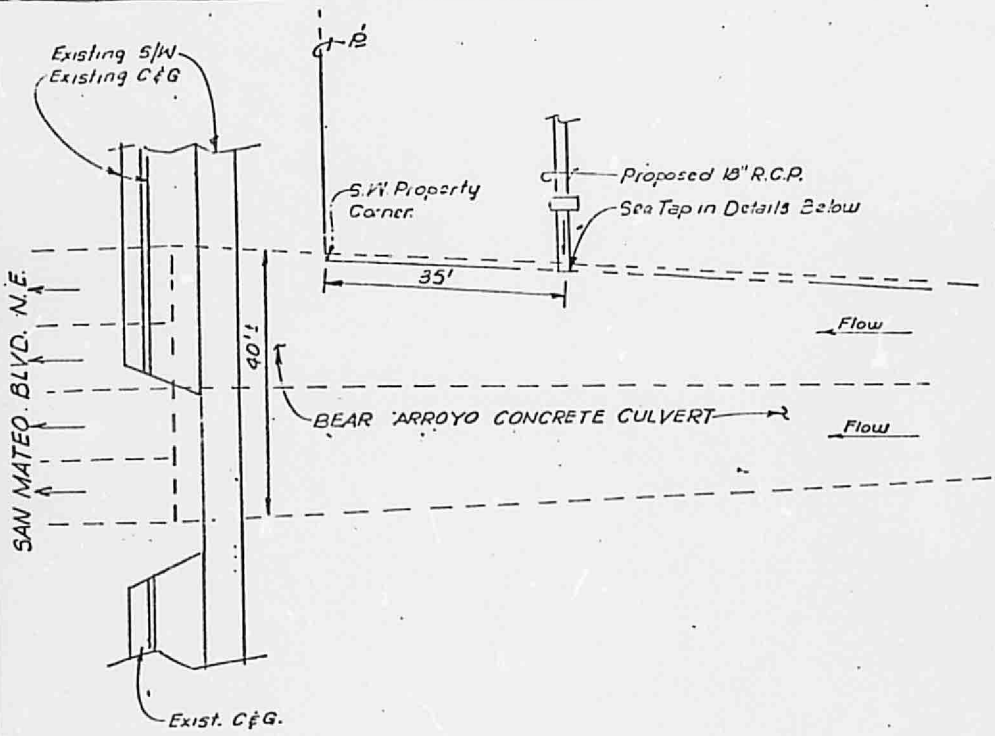

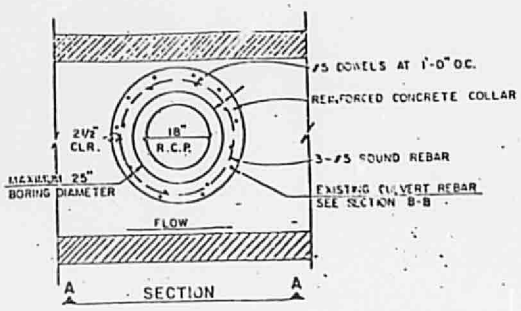

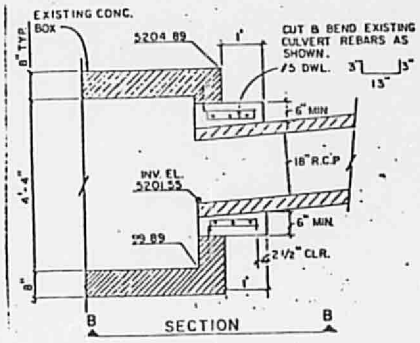

C-111

APPROVALS	NAME	DATE	TITLE: R.C.P. TAP IN DETAIL 6220 SAN MATEO N.E.
A.C.E./DESIGN	[illegible]	15 Sep 83	
INSPECTOR	[illegible]	11-2-83	PERMIT NO. / MAP

CITY OF ALBUQUERQUE

DRAINAGE FACILITIES WITHIN CITY RIGHT-OF-WAY

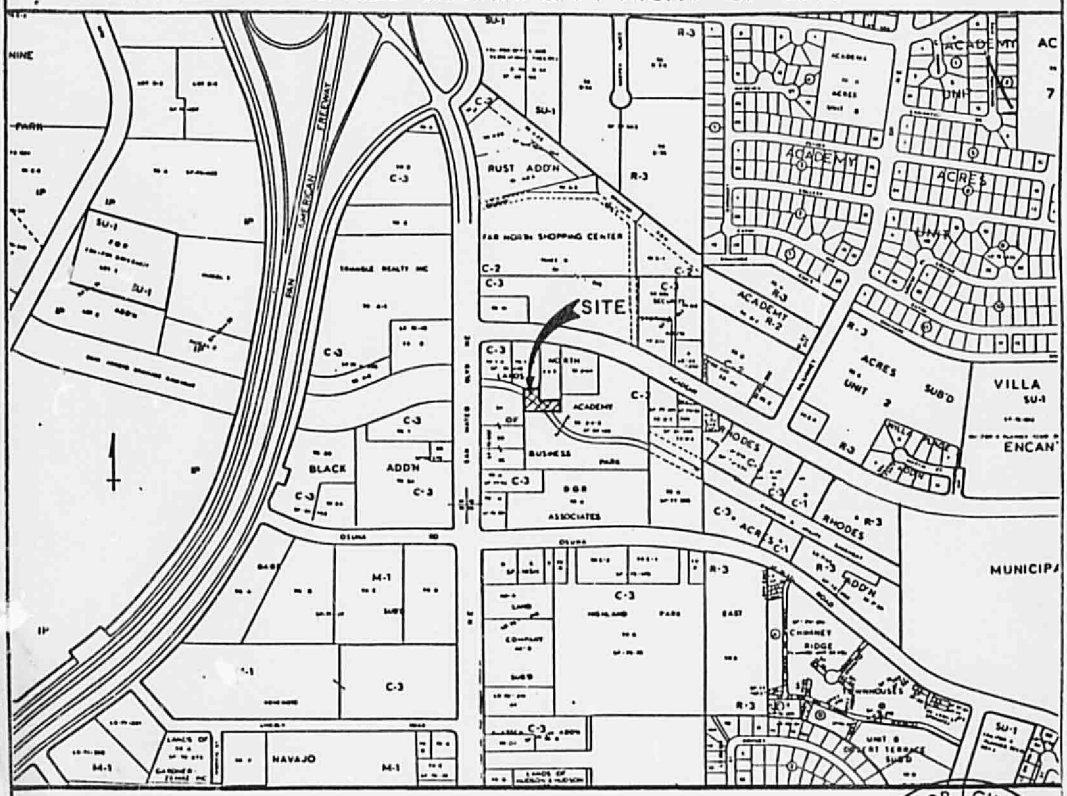

OWNER:
ANN CLARK
RIO GRANDE BLVD., N.W.
ALBUQUERQUE, NEW MEXICO

Permit # 16044

7660-4900

E18-D34

VICTOR J. CHAVEZ
STATE OF NEW MEXICO
NO.
REGISTERED PROFESSIONAL ENGINEER

NOTICE TO CONTRACTOR

1. An excavation/construction permit will be required before beginning any work within City right-of-way. An approved copy of these plans must be submitted at the time of application for this permit.

2. All work detailed on these plans to be performed, except as otherwise stated or provided hereon, shall be constructed in accordance with Public Works Contract No. 84-1.

3. Two working days prior to any excavation, contractor must contact Line Locating Service, 765-1234, for location of existing utilities.

4. Prior to construction, the contractor shall excavate and verify the horizontal and vertical locations of all obstructions. Should a conflict exist, the contractor shall notify the engineer so that the conflict can be resolved with a minimum amount of delay.

5. Backfill compaction shall be according to RESIDENTIAL street use.

D-55

APPROVALS	NAME	DATE	TITLE: DROP INLET CONNECTION TO EXISTING CULVERT 6220 SAN MATEO N.E.	
A.C.E./DESIGN	D. Hibbs	4-13-84		
INSPECTOR	D. Salas	5-25-84	PERMIT NO.	MAP
A.C.E./FIELD	W. McCamara	5-25-84	SHEET 1 OF 3	NO. F-18

CITY OF ALBUQUERQUE

DRAINAGE FACILITIES WITHIN CITY RIGHT-OF-WAY

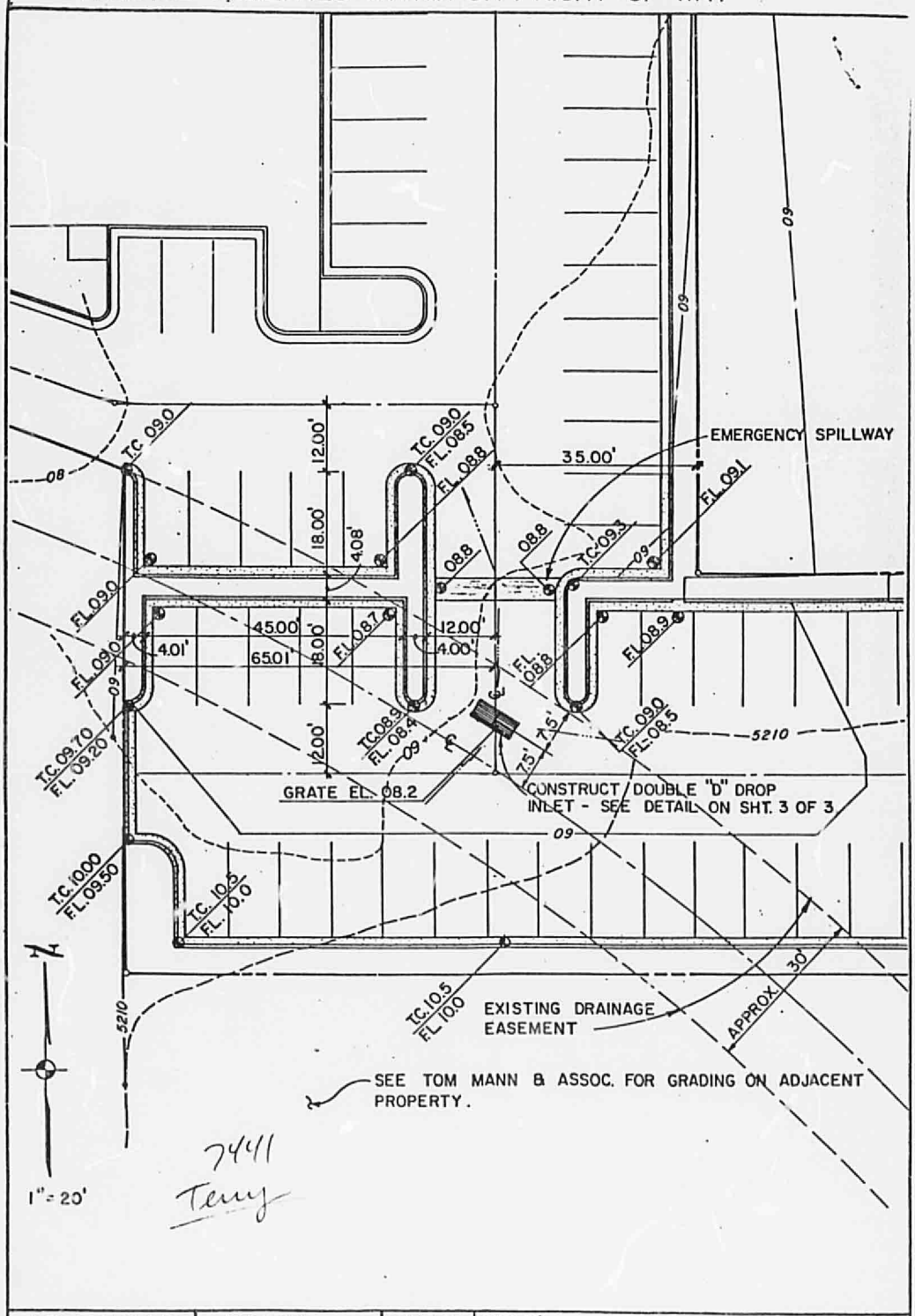

APPROVALS	NAME	DATE	TITLE: DROP INLET CONNECTION TO EXISTING CULVERT 6220 SAN MATEO N.E.	
A.C.E./DESIGN	[illegible]	4-13-84		
INSPECTOR	[illegible]	5-25-84	PERMIT NO.	MAP
A.C.E./FIELD	W.F. McNamara	5-25-84	SHEET 2 OF 3	NO. F-18

CITY OF ALBUQUERQUE

DRAINAGE FACILITIES WITHIN CITY RIGHT-OF-WAY

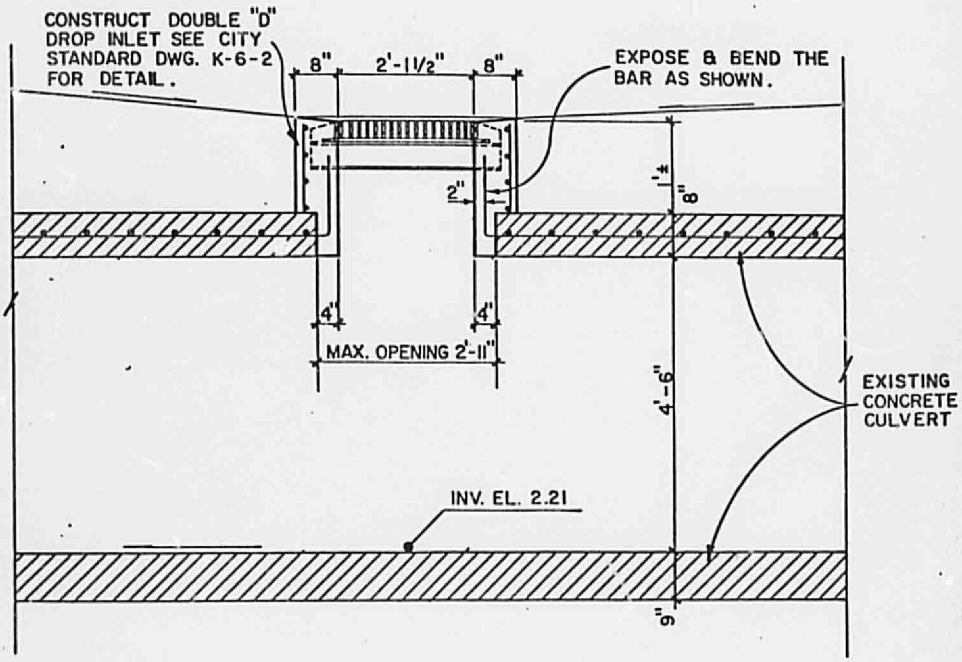

DROP INLET CONNECTION TO EXIST. CONC. CULVERT

APPROVALS	NAME	DATE	TITLE: DROP INLET CONNECTION TO EXISTING CULVERT 6220 SAN MATEO N.E.	
A.C.E./DESIGN	[illegible]	4-13-84		
INSPECTOR	[illegible]	5-25-84	PERMIT NO.	MAP
A.C.E./FIELD	[illegible]	5-25-84	SHEET 3 OF 3	NO. F-18

2 0 6 4