HYDROLOGY E18/D35 SEAGULL STREET RESTAURANT

K18-D35

SEAGULL STREET

RESTAURANT

2 PLANS

Tom Mann Associates, Inc.
Engineers
811 DALLAS, N.E. • ALBUQUERQUE • NEW MEXICO • 87110 • 505-265-5611

30683
August 7, 1984

"LAST REVISION"

E18 D35

Billy Goolsby
City of Albuquerque
P.O. Box 1293
Albuquerque, NM 87103

Re: Seagull Street Restaurant

Dear Billy:

Transmitted herewith is a revised plan for Seagull Street Restaurant. I have addressed your concern regarding overflow should the inlet system become clogged. If you have further questions or comments, please do not hesitate to call.

Sincerely,

TOM MANN & ASSOCIATES, INC.

Steven K. Schroll
Project Engineer

SKS:ra
xc: Claudio Vigil/encls.

OK
8/8/84

RECEIVED
AUG 08 1984
HYDROLOGY SECTION

INFORMATION SHEET

PROJECT TITLE Seag 1 Street TYPE OF SUBMITTAL Drainage Plan

ZONE ATLAS PAGE NO. E-18 CITY ADDRESS Academy Road N.E.

LEGAL DESCRIPTION Portion Tract 2-A-2-B North Academy Business Park

ENGINEERING FIRM Tom Mann & Associates, Inc CONTACT Steven K. Schroll

ADDRESS 811 Dallas N.E., Albq. NM PHONE 265-5611

OWNER Pacific Management CONTACT Jim Shumaker

ADDRESS 9500 Montgomery N.E., Albq. NM PHONE 292-6104

ARCHITECT Claudio Vigil CONTACT Claudio Vigil

ADDRESS 323 Romero N.W., Suite 9 PHONE 247-1000

SURVEYOR Not Available CONTACT

ADDRESS PHONE

CONTRACTOR Not Available CONTACT

ADDRESS PHONE

PRE-DESIGN MEETING:

___ YES
_X_ NO
___ COPY OF CONFERENCE RECAP SHEET PROVIDED

PLEASE CHECK TYPE OF APPROVAL EXPECTED WITH THIS SUBMITTAL:

___ SKETCH PLAT APPROVAL
___ PRELIMINARY PLAT APPROVAL
___ SITE DEVELOPMENT PLAN APPROVAL
___ FINAL PLAT APPROVAL
___ BUILDING PERMIT APPROVAL
___ CERTIFICATE OF OCCUPANCY APPROVAL
___ ROUGH GRADING PERMIT APPROVAL
___ GRADING/PAVING PERMIT APPROVAL
_X_ OTHER Revisions (SPECIFY)

DATE SUBMITTED: August 7, 1984

BY: Steven K. Schroll

RECEIVED
AUG 07 1984
HYDROLOGY SECTION

Tom Mann Associates, Inc.
Engineers
811 DALLAS, N.E. • ALBUQUERQUE • NEW MEXICO • 87110 • 505-265-5611

30683
July 26, 1984

Mr. Billy Goolsby
City of Albuquerque
P.O. Box 1293
Albuquerque, New Mexico 87103

Re: Laughing Seagull Restaurant E18-D35

Dear Billy:

Transmitted herewith is the revised drawing showing the elemination of the curb in some parking areas.

If you have any questions concerning this plan, please do not hesitate to call.

Sincerely,

TOM MANN & ASSOCIATES, INC.

Steven K. Schroll
Project Engineer

SKS:kl
Encls.

Responded by phone 8/1/84

Rec'd 7/30/84

306E3
4/16/84

PROJECT: LAUGHING SEAGULL
PROJECT NO.: 3068

DRAINAGE BASIN COMPUTATIONS

BASIN:
PORTION OF BASIN #6
DEVELOPED STATE

LAND-USE DESCRIPTION:

DESCRIPTION	SOIL GROUP	AREA (ac)	Cn	% OF TOTAL
PERVIOUS AREA	B	0.96	80	39 %
IMPERVIOUS AREA		1.52	95	61 %
	COMPOSITE:	2.48	89	100 %

WATERSHED CHARACTERISTICS:

LENGTH: 250 ft.
DROP: 8 ft.
SLOPE: 3.20 %
TIME OF CONCENTRATION: 0.03 hr.

STORM CHARACTERISTICS:

FREQUENCY: 100 yr.;6hr	FREQUENCY: 10 yr.; 6hr
RAINFALL: 2.6 in.	RAINFALL: 1.8 in.
RUNOFF: 1.56 in.	RUNOFF: 0.88 in.
DISTRIBUTION CURVE: 75	DISTRIBUTION CURVE: 75
DISCHARGE: 1.55 cfs/ac/in	DISCHARGE: 1.55 cfs/ac/in
PEAK DISCHARGE (Q): 5.9 c.f.s.	PEAK DISCHARGE (Q): 3.3 c.f.s.
VOLUME: 14,000 c.f. 0.32 ac.ft.	VOLUME: 7,800 c.f. 0.18 ac.ft.

RECEIVED
APR 18 1984
HYDROLOGY SECTION

PROJECT: LAUGHING SEAGULL
PROJECT NO.: 3068

DRAINAGE BASIN COMPUTATIONS (S.C.S. METHOD)
BASIN:
PORTION OF #6 DISCHARGING OFFSITE
DEVELOPED STATE

LAND-USE DESCRIPTION:

DESCRIPTION	SOIL GROUP	AREA (ac)	Cn	% OF TOTAL
PERVIOUS AREA	B	0.04	80	33 %
IMPERVIOUS AREA		0.08	95	67 %
	COMPOSITE:	0.12	90	100 %

WATERSHED CHARACTERISTICS:

LENGTH: 200 ft.
DROP: 4 ft.
SLOPE: 1.75 %
TIME OF CONCENTRATION: 0.04 hr.

STORM CHARACTERISTICS:

FREQUENCY: 100 yr.;6hr
RAINFALL: 2.6 in.
RUNOFF: 1.62 in.
DISTRIBUTION CURVE: 75
DISCHARGE: 1.55 cfs/ac/in
PEAK DISCHARGE (Q): 0.3 c.f.s.

VOLUME: 700 c.f. 0.02 ac.ft.

FREQUENCY: 10 yr.; 6hr
RAINFALL: 1.8 in.
RUNOFF: 0.93 in.
DISTRIBUTION CURVE: 75
DISCHARGE: 1.55 cfs/ac/in
PEAK DISCHARGE (Q): 0.1 c.f.s.

VOLUME: 400 c.f. 0.01 ac.ft.

4/16/84 30683

Supplemental Calculations for revisions to site plan dated 3/20/84

Inlet Capacity

orifice equation: $Q = CA\sqrt{2gh}$

$C = 0.6$
$A = 2.22$ sf
$g = 32.2$ ft/sec^2
$h = 6'' = 0.5'$

$Q = 7.56$ cfs

Pipe Capacity

orifice equation: $Q = CA\sqrt{2gh}$

$C = 0.7$
$A = 1.41$ sf
$g = 32.2$ ft/sec^2
$h = 3.0'$

$Q = 13.72$ cfs

Tom Mann Associates, Inc.
Engineers
811 DALLAS, N.E. • ALBUQUERQUE • NEW MEXICO • 87110 • 505-265-5611

30683
April 17, 1984

Billy Goolsby
City of Albuquerque
P.O. Box 1293
Albuquerque, NM 87103

Re: Laughing Seagull Restaurant (E-18-D35)

Dear Billy:

Transmitted herewith are the calculations you requested in your letter of April 10, 1984. These calculations demonstrate that the inlet and pipe outlet have the capacity to handle the 100-year, 6-hour discharge.

If you have any questions or comments, please do not hesitate to call.

Sincerely,

TOM MANN & ASSOCIATES, INC.

Steven K. Schroll
Project Engineer

SKS:ra

RECEIVED
APR 18 1984
HYDROLOGY SECTION

City of Albuquerque
P.O. BOX 1293 ALBUQUERQUE, NEW MEXICO 87103

DESIGN HYDROLOGY SECTION
123 Central NW, Albuquerque, NM 87102
(505) 766-7644

April 10, 1984

Mr. Steve Schroll
Tom Mann & Associates
811 Dallas NE
Albuquerque, NM 87110

REF: REVISED GRADING AND DRAINAGE PLAN FOR LAUGHING SEAGULL RESTAURANT (E18-D35) RECEIVED MARCH 21, 1984

Dear Steve:

The above referenced revised plan, dated March 20, 1984, does not significantly impact the drainage for this site. However, you are increasing the impervious area for this site and you did not recalculate the runoff associated with this revision.

Please recheck to make sure that this increase will not adversely impact the outlet system.

Please attach a copy of this plan along with the approved "Construction Within Public R/W" document to the construction set prior to issuance of the building permit.

If I can be of further assistance, please contact me at 766-7644.

Yours truly,

Billy J. Goolsby

Billy J. Goolsby, PE
City/County Flood Plain Admin.

BJG:mrk

FROM Steve Schroll
Tom Mann's Assoc
Bill Dallas NE 265-5611

30683

TO Billy Goodsby | AT City - Hydrology

SUBJECT Seagull Restaurant. E18 - D-35 | DATE 3/20/84

Transmitted herewith are prints of the revised grading plan for the above mentioned project. Revisions are due to parking lot changes. If you have any questions, please call

PLEASE REPLY TO . . . | SIGNED Steve Schroll

RECEIVED MAR 21 1984 HYDROLOGY

RECEIVED MAR 21 1984 HYDROLOGY

DATE | SIGNED 5310

REDIFORM 4W442 TRIP
POLY PAK (50 SETS) 4P442

SPEEDIMEMO

SEND PARTS 1 AND 3
PART 3 WILL BE RETURNED WITH REPLY.

SPEEDIPLY® PAT'D MCM® PAT'D MBF 28

Rec' 1/2/84

City of Albuquerque

P.O. BOX 1293 ALBUQUERQUE, NEW MEXICO 87103

MAYOR
Harry E. Kinney

CHIEF
ADMINISTRATIVE OFFICER
Frank A. Kleinhenz

December 29, 1983

Mr. Jim Achen
The Jim Achen Company
P.O. Box 36540, Station "D"
Albuquerque, New Mexico 87176

Re.: Seagull Lane

Dear Jim:

On behalf of the City, I would like to thank you and North Academy Business Park Development, Inc., for your cooperation in the dedication and proposed improvement of Seagull Lane between Osuna and Academy.

Working in a cooperative environment make things happen. Hope the excuted agreement is in all ways satisfactory to you and your clients. I know the City is pleased with the acquistion and improvement of Seagull Lane.

Very truly yours,

Richard S. Heller

Richard S. Heller
Special Projects Coordinator
Transportation Department

RSH:lg

E18-B35

AGREEMENT

2-1140-2

This Agreement made between the CITY OF ALBUQUERQUE, New Mexico, a municipal corporation, hereinafter referred to as "City", and NORTH ACADEMY BUSINESS PARK DEVELOPMENT, INC., d/b/a North Academy Business Park, a New Mexico corporation, hereinafter referred to as "Developer".

WITNESSETH:

WHEREAS, the Developer is the owner of certain real property situated within the City of Albuquerque, New Mexico, as described on Exhibit "A", (which Exhibit is a Subdivision Plat for the Property which has been submitted to the City for approval), attached hereto and made a part of this Agreement by reference, hereinafter referred to as the "Property"; and

WHEREAS, Seagull Lane will become a dedicated public right-of-way when the Plat is recorded; and

WHEREAS, the Developer requires public access and utilities; and

WHEREAS, no street improvement, public infrastructure or access will exist until the propposed Seagull Lane is dedicated; and

WHEREAS, the Developer is desirous of improving Seagull Lane in conjunction with the City; and

WHEREAS, Developer has submitted a Site Development Plan to the City's Development Review Board ("DRB") for approval; and

WHEREAS, the City and Developer wish to define their responsibilities with respect to improvement of Seagull Lane prior to the DRB acting on the proposed subdivison plat.

NOW, THEREFORE, the parties to this Agreement, in consideration of mutual benefits and stipulations set out herein, agree as follows:

1. City's Responsibility.

The City agrees to pay the Developer a maximum of $27,500.00 for Tract H-1 as shown on Exhibit "A", which parcel will become the south extension of Seagull Lane, contingent on the Developer conveying such parcel the the City and meeting Developer's other obligations in this agreement. The City's payment shall be made at such time as the Developer obtains a Work Order from the City to proceed with improvements of Seagull Lane.

2. Developer's Responsibilities.

a. The Developer will cause Tract H-2 to be dedicated to the City on the Subdivision Plat without compensation from the City to the Developer or any other person or entity, which parcel will become the north extension of Seagull Lane.

b. As part of the Developer's submission of the Subdivision Plat to the City, the Developer will submit a Subdivision Improvements Agreement in the City's Standard Form, including the following provisions:

i. The Developer will improve Seagull Lane to the satisfaction of the City, and at no cost to the City, with curb, gutter, pavement and necessary grading.

ii. The Developer will provide a satisfactory crossing of the Bear Canyon arroyo at Seagull Lane, at no cost to the City.

iii. The Developer will provide necessary water, sanitary sewer, storm drainage and utilities to serve the Property, at no cost to the City.

iv. The Developer will see that design and construction will be to City Standards.

c. The Developer and the City agree that sidewalks will be provided in the future as individual developments that abut Seagull Lane are approved.

3. All improvements listed above, except sidewalks, shall be completed no later than one (1) year from the recording of the Subdivision Plat, unless extended pursuant to the City's Subdivision Ordinance. Sidewalks shall be completed at such time as the specific developments which abut Seagull Lane are completed.

4. This Agreement shall be binding on the heirs, assigns, administrators and successors in interest of the parties hereto and must be recorded as a Covenant running with the land in the records of the Bernalillo County Clerk.

Dated this 14th day of December, 1983.

CITY OF ALBUQUERQUE

BY Frank A. Kleinheinz

TITLE Chief Administrative Officer

NORTH ACADEMY PARK DEVELOPMENT, INC.

BY Jim Achen

TITLE President

Reviewed by Legal Department: [signature]

Reviewed by Transportation Department: Joseph A. Martin 12/13/83

Reviewed by City Engineer: R.M. Sheppard 12/13/83

ATTEST:

Angie Ludi
City Clerk/Recorder

IN WITNESS WHEREOF, this Option to Purchase has been executed this 14 day of December, 1983.

NORTH ACADEMY PARK DEVELOPMENT, INC.

BY Jim Achen
JIM ACHEN

STATE OF NEW MEXICO)
) ss.
COUNTY OF BERNALILLO)

The foregoing instrument was acknowledged before me this 14th day of December, 1983, by Jim Achen.

Carmen L. Castillo
Notary Public

OFFICIAL SEAL
CARMEN L. CASTILLO
NOTARY PUBLIC - STATE OF NEW MEXICO
My Commission Expires 2/24/85

My Commission Expires:
2/24/85

IN WITNESS WHEREOF, this Option to Purchase has been executed this _____ day of _____, 1983.

CITY OF ALBUQUERQUE

BY Frank A. Kleinheinz
FRANK A. KLEINHENZ

STATE OF NEW MEXICO)
) ss.
COUNTY OF BERNALILLO)

The foregoing instrument was acknowledged before me this 14th day of December, 1983, by Frank A. Kleinheinz

Ida L. Grant
Notary Public

My Commission Expires:
12/18/84

A REPLAT OF
NORTH ACADEMY BUSINESS PARK
ALBUQUERQUE, NEW MEXICO
OCTOBER, 1983

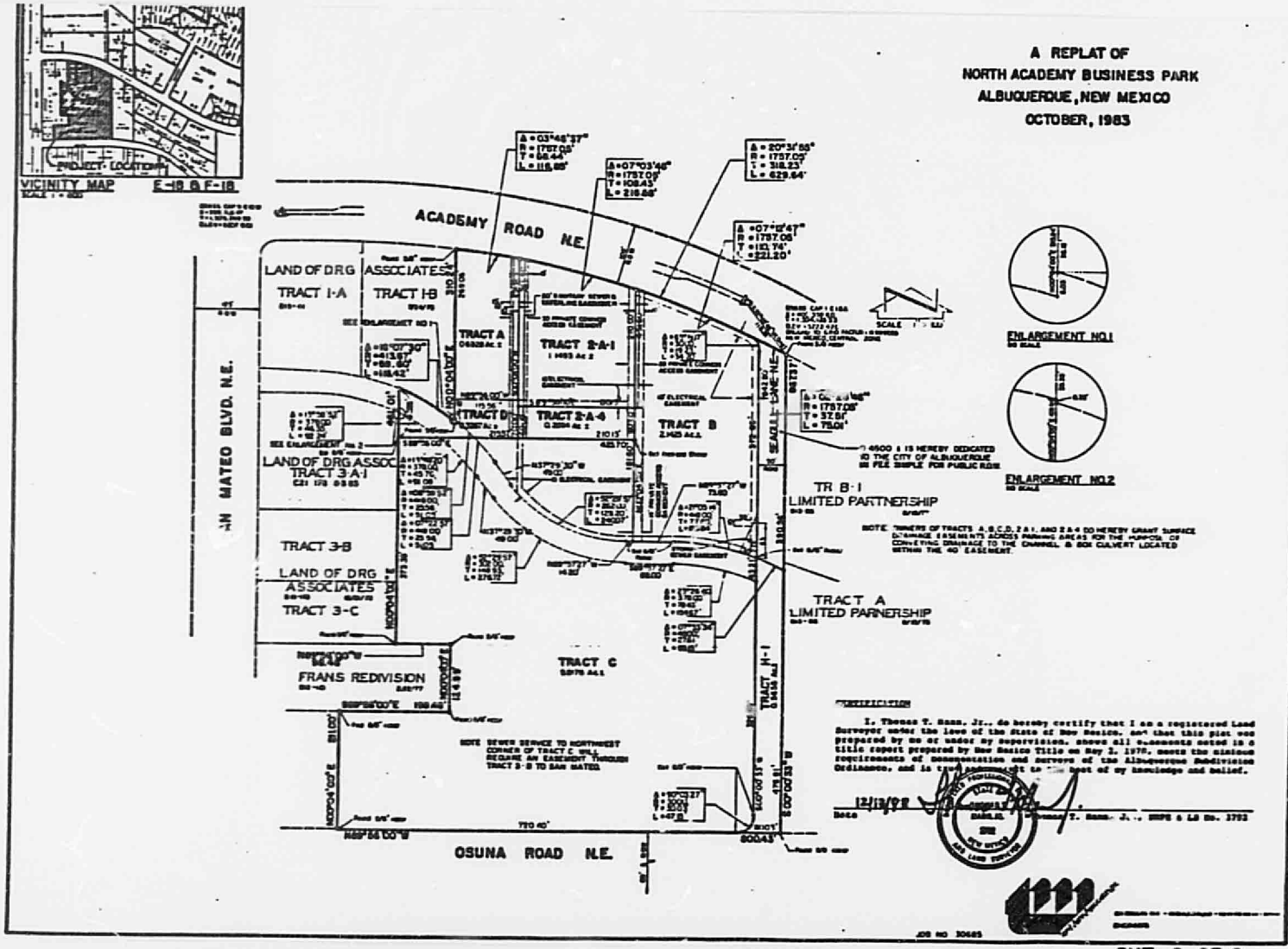

THIS MICROIMAGE IS THE BEST POSSIBLE REPRODUCTION DUE TO THE POOR QUALITY OF THE ORIGINAL DOCUMENT.

FROM Steve Schroll
Tom Mann & Assoc
265 - 5611

30683

TO Billy Gooksby | AT City

SUBJECT Seagull Restaraunt | DATE 11/3/83

Transmitted herewith is one copy of the final approved drawing plan for the above mentioned project for your files. This drawing shows the revision block as per your request

PLEASE REPLY TO . . . | SIGNED Steve R Schroll

DATE | SIGNED | 7291

REDIFORM 4W442 TRIP
POLY PAK (50 SETS) 4P442

SPEEDIMEMO

SEND PARTS 1 AND 3
PART 3 WILL BE RETURNED WITH REPLY.

SPEEDIPLY® PAT.D MCP® PAT.D MBI 28

FILE COPY

City of Albuquerque

P.O. BOX 1293 ALBUQUERQUE, NEW MEXICO 87103

October 28, 1983

Mr. Steven Schroll
Tom Mann & Associates, Inc.
811 Dallas NE
Albuquerque, NM 87110

REF: GRADING AND DRAINAGE PLAN FOR LAUGHING SEAGULL RESTAURANT (E18-D35)

Dear Mr. Schroll:

The above referenced plan received, October 14, 1983, is in compliance with my previous comments and is hereby approved.

This approved plan, along with the stamped, signed and new revision date will have to be included in the construction plans.

The approved "Construction Within Public R/W" document will also need to be provided prior to release of the building permit.

If I can be of further assistance, please feel free to contact me at 766-7644.

Sincerely yours,

Billy J. Goolsby P.E.

Billy Goolsby
Civil Engineer/Hydrology

BG:mrk

Tom Mann Associates, Inc.
Engineers
811 DALLAS, N.E. • ALBUQUERQUE • NEW MEXICO • 87110 • 505-265-5611

RECEIVED
OCT 14 1983
ENGINEERING

30683
Ocotber 12, 1983

Mr. Billy Goolsby, P.E.
Hydrology Department
City of Albuquerque
P.O. Box 1293
Albuquerque, New Mexico 87103

Re: ~~Grading & Drainage~~ Plan for Laughing Seagull Restaurant
(E18 - D35)

Dear Mr. Goolsby:

In regards to your letter of October 5, 1983, I have addressed your comments as follows:

1. The 1983 Zone Atlas is incorrect. The above referenced site is indeed a portion of Tract 2-A-2-B. The site is currently being platted.

2. See verbage, sheet 2 of 2.

3. The new plat will dedicate street R.O.W.. The site development plan for North Academy Business Park has been approved. The access drive to the west is private.

4. See note concerning erosion control, sheet 1 of 2.

5. The pond at the southwest corner of the building has been deleted.

6. See Item 5.

7. This pond is not a drainage pond, therefore, it is not under our control to specify a fence. However, I have made this comment to the architect, and was told that a fence would be constructed.

8. The building drains have been shown.

9. This small amount of runoff has been directed into the channel temporarily. In the future, an easement will be required across the parking lot to the west. This easement will be included on the current plat.

10. See City Project #1956. This has been clarified on Sheet 1 of 2.

11. This has been submitted.

If you have further questions or comments concerning this plan, please do not hesitate to call.

Sincerely,

TOM MANN & ASSOCIATES, INC.

Steven K. Schroll

Steven K. Schroll
Staff Engineer

SKS:kf

City of Albuquerque
P.O. BOX 1293 ALBUQUERQUE, NEW MEXICO 87103

October 5, 1983 DPB 84-09

Mr. Thomas T. Mann
Tom Mann & Associates, Inc.
811 Dallas N.E.
Albuquerque, N.M. 87110

RE: CONCEPTUAL GRADING AND DRAINAGE PLAN FOR LAUGHING SEAGULL RESTAURANT (E18-D35)

Dear Mr. Mann:

I have reviewed the above referenced submittal and the following comments are in regard to the review.

1. The legal description on sheet 1 of 2 does not exactly match the designation in the new 1983 edition of the zone atlas.

2. Delineation with respect to flood hazard has not been addressed.

3. The property line extends into the street R/W's. Are these dedicated streets? Also, access is from the western boundary street (name?) only and through a 15' width. Is this acceptable to the traffic and zoning departments?

4. Erosion control plan is not specified.

5. Ponding elevations are not shown.

6. All ponds are to have positive discharge within 24 hours. The pond at the southwest corner of the building does not have any discharge.

7. The proposed landscaping pond at the front of the building needs to be addressed for clarity. At the overflow elevation, the pond would be 5 foot deep. DPM specifies that ponds with water surface 18" or more are to be fenced. No fencing is specified on the plan.

8. Where are the building drains?

9. There are no provisions for runoff into the channel for the western boundary street. Are there any provided and is this street to be improved.

10. City approved street grades are required.

11. "Construction Within Public Right-of-Way" documents are required prior to building permit sign-off.

Should you have any questions or comments regarding this review, please feel free to contact me.

Yours truly,

Billy J. Goolsby P.E.

Billy J. Goolsby, P.E.
Civil Engineer/Hydrology

BJG/tsl

9/29/83

Review for Conceptual since it is a new report. Indicated as Drainage Plan on Info sheet.

Review of Laughing Seagull Restaurant (E18-035)

1. The proposed pond at the overflow elevation will be 5' deep. No fencing is indicated around the perimeter.

2. No computations are provided but the discharge from the pond will be 3.75 cfs with the 5 ft. head.

3. There is shown another ponding area at the southwest corner of the building and no discharge provisions addressed.

4. Building drainage is not indicated

5. Reference is made to an approved Drainage Report on November 5, 1981.

INFORMATION SHEET

PROJECT TITLE Laughing Seagull TYPE OF SUBMITTAL Drainage Plan

ZONE ATLAS PAGE NO. E-18 -033 CITY ADDRESS Academy Rd. NE

LEGAL DESCRIPTION Portion Tract 2-A-2-B North Academy Bus Park

ENGINEERING FIRM Tom Mann & Assoc CONTACT Steve Schroll

ADDRESS 811 Dallas NE PHONE 265-5611

OWNER Pacific Management CONTACT Jim Shumaker

ADDRESS 9500 Montgomery NE PHONE 292-6104

ARCHITECT Claudio Vigil CONTACT Claudio Vigil

ADDRESS 323 Romero NW Suite A PHONE 247-1000

SURVEYOR Not availible CONTACT

ADDRESS PHONE

CONTRACTOR Not availible CONTACT

ADDRESS PHONE

DATE SUBMITTED 9/7/83

BY Steve K Schroll

Use this Information Sheet when submitting the following:

Drainage report or plan, conceptual grading and drainage plan, engineer's certification plan, erosion plan, and grading plan. Provide the information applicable to your submittal.

RECEIVED
SEP 08 1983
ENGINEERING

(1) City approves street cross section. Property line increases St R/W – has the R/W been dedicated

(2) "Construction within Public R/W" plans required before building permit sign-off

(3) Site has no access except thru the interior street – Street improvements required

(4) ~~Leg~~ Site's Legal Description not found in latest Zone Atlas Book – May need to provide ~~legal~~ LEGAL DESC

(5) The access may be within the 15' shown on the westside of the site, however no provision for conveying runoff from the area into the channel. Also this access may not be acceptable to Traffic or Zoning. Need to check & ask Tom Nhan

(6) Needs to address the proposed landscaping along adjacent to the ~~front~~ Building

THIS MICROIMAGE IS THE BEST POSSIBLE REPRODUCTION DUE TO THE POOR QUALITY OF THE ORIGINAL DOCUMENT.

CITY OF ALBUQUERQUE

DRAINAGE FACILITIES WITHIN CITY RIGHT-OF-WAY

Permit # 14135
Rec 8-2-84

VICINITY MAP
SCALE 1" = 800'

E-18

PROJECT BENCHMARK=T.B.M.

AN A.C.S. BRASS CAP STAMPED "1-E18A 1978" SET IN THE TOP OF A CONCRETE POST FLUSH WITH THE GROUND LOCATED IN THE CENTER OF THE MEDIAN IN ACADEMY ROAD N.E. NEAR THE EAST NOSE, 0.1 MILE EAST OF SAN MATEO BLVD. N.E. ELEVATION: 5222.426 FEET (MSLD).

REGISTERED PROFESSIONAL ENGINEER
STATE OF NEW MEXICO
THOMAS
AND LAND SURVEYOR

Rec 8-2-84

NOTICE TO CONTRACTOR

1. An excavation/construction permit will be required before beginning any work within City right-of-way. An approved copy of these plans must be submitted at the time of application for this permit.
2. All work detailed on these plans to be performed, except as otherwise stated or provided hereon, shall be constructed in accordance with "Contract Documents for City-Wide Utilities and Cash Paving No. 31 "
3. Two working days prior to any excavation, contractor must contact Line Locating Service, 765-1234, for location of existing utilities.
4. Prior to construction, the contractor shall excavate and verify the horizontal and vertical locations of all obstructions. Should a conflict exist, the contractor shall notify the engineer so that the conflict can be resolved with a minimum amount of delay.
5. Backfill compaction shall be according to N/A street use.

C-139

APPROVALS	NAME	DATE	TITLE: 5410 ACADEMY ROAD NE PIPE INLET INTO CHANNEL	
A.C.E./DESIGN		8/6/83		
INSPECTOR			PERMIT NO.	MAP
A.C.E./FIELD		8/3/84	SHEET 1 OF 4	NO. E-18

CITY OF ALBUQUERQUE

DRAINAGE FACILITIES WITHIN CITY RIGHT-OF-WAY

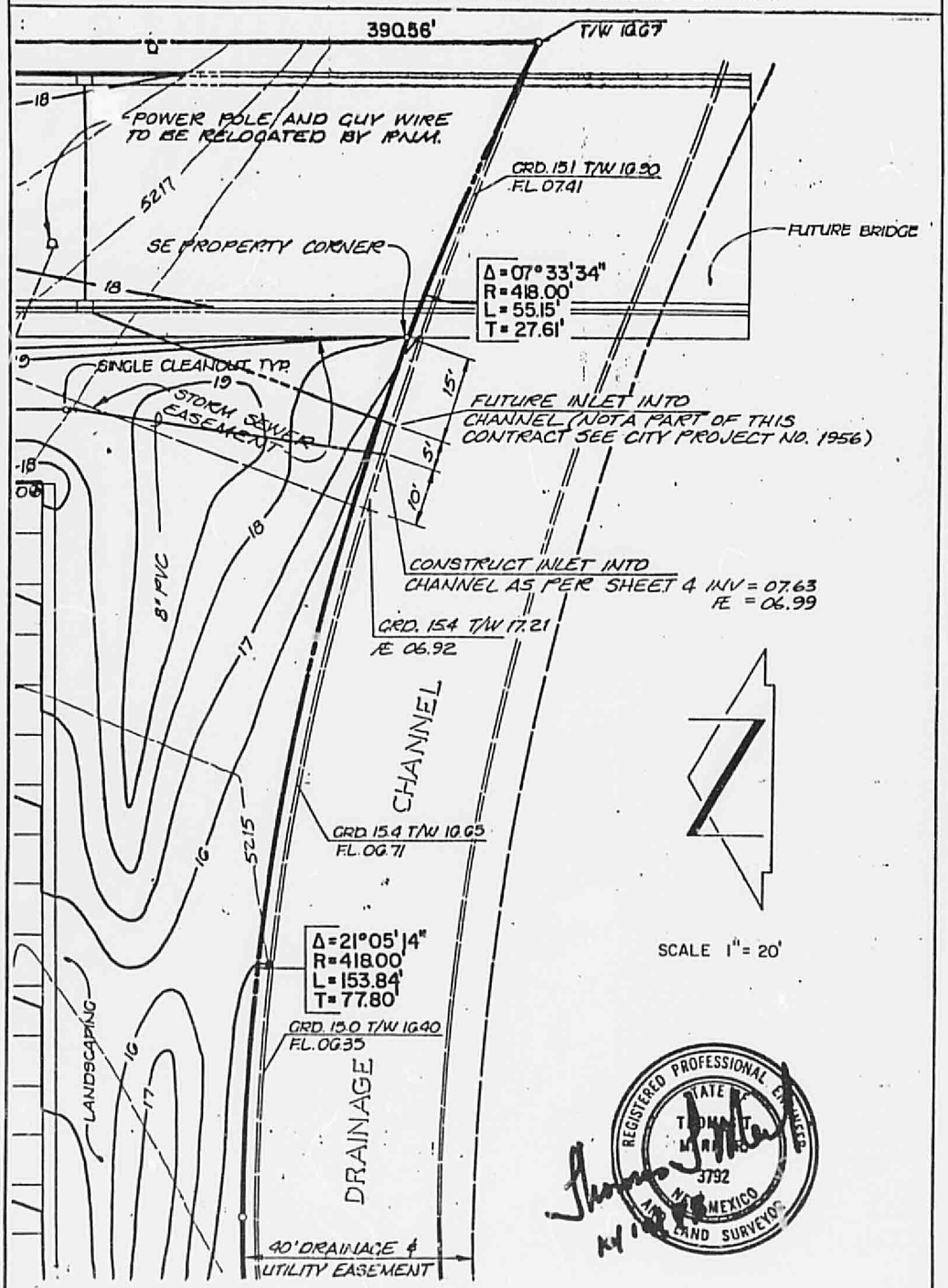

APPROVALS	NAME	DATE	TITLE: 5410 ACADEMY ROAD NE PIPE INLET INTO CHANNEL
A.C.E./DESIGN	[illegible]	26 Oct 83	
INSPECTOR	[illegible]		
A.C.E./FIELD	[illegible]	4/2/84	PERMIT NO. SHEET 2 OF 4 — MAP NO. E-18

CI. ' OF ALBUQUER. 'JE

DRAINAGE FACILITIES WITHIN CITY RIGHT-OF-WAY

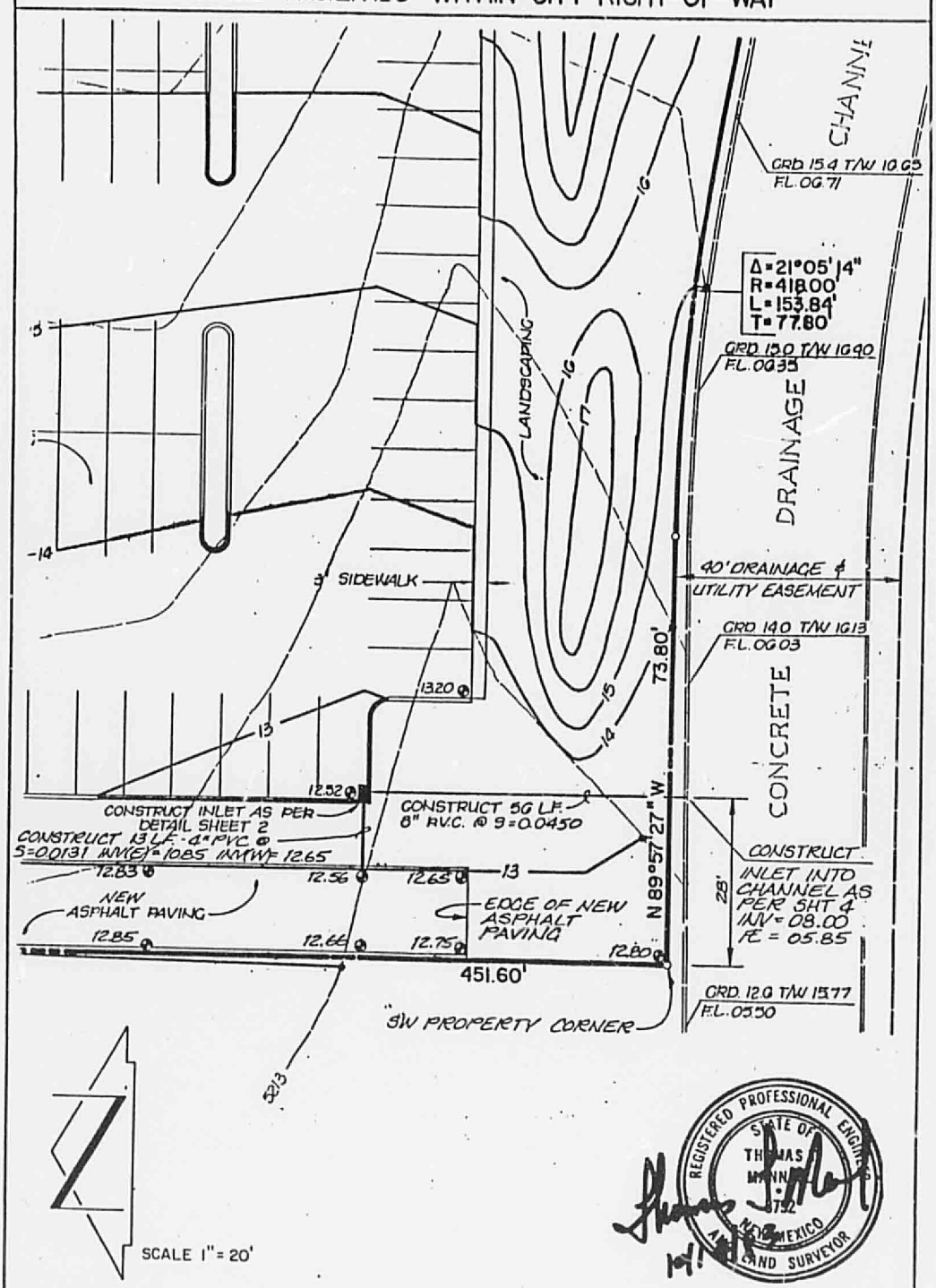

APPROVALS	NAME	DATE	TITLE: 5410 ACADEMY ROAD NE PIPE INLET INTO CHANNEL
A.C.E. / DESIGN		26 Oct 88	
INSPECTOR			
A.C.E. / FIELD		8/3/89	PERMIT NO. SHEET 3 OF 4 — MAP NO. E-18

CITY OF ALBUQUERQUE

DRAINAGE FACILITIES WITHIN CITY RIGHT-OF-WAY

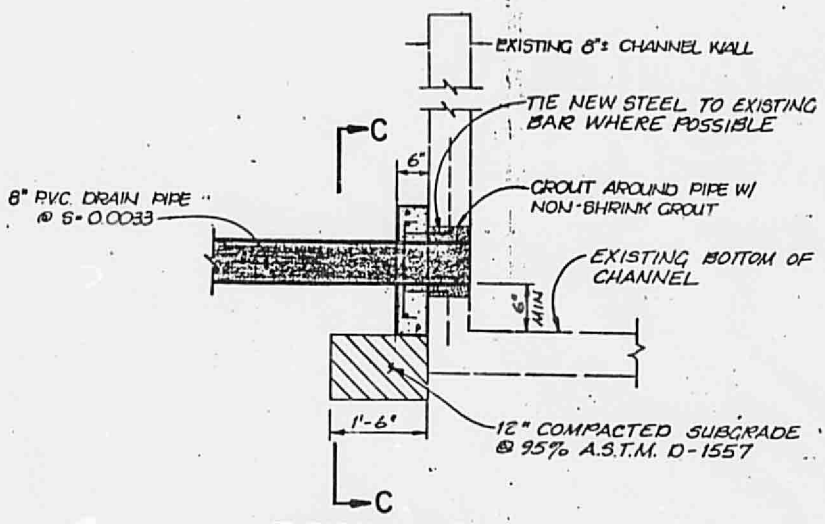

TYPICAL PIPE INLET INTO CHANNEL

SCALE: 1" = 2'

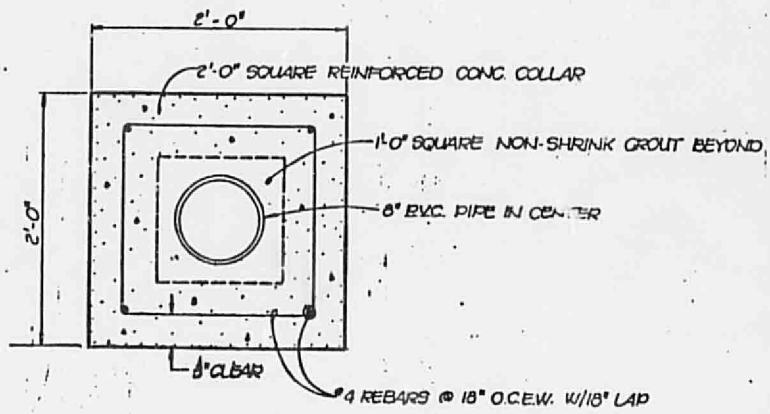

SECTION C-C

SCALE: 1" = 1'

REGISTERED PROFESSIONAL ENGINEER STATE OF NEW MEXICO THOMAS M. MOORE 3792 LAND SURVEYOR

APPROVALS	NAME	DATE	TITLE: 5410 ACADEMY ROAD NE PIPE INLET INTO CHANNEL
A.C.E./DESIGN	P. Kichak	26 Oct 83	
INSPECTOR			PERMIT NO.
A.C.E./FIELD	W. J. McNamara	8/3/84	SHEET 4 OF 4 — MAP NO. E-18

1 1 5 0

0 5 4 1