HYDROLOGY E19/D11 1 PLAN

E19/D11

1 Plan

ENGINEERS & PHOTOGRAMMETRISTS

BOHANNAN-HUSTON INC.

4125 CARLISLE BLVD., N.E. ALBUQUERQUE, NEW MEXICO 87107 505 881-2000

September 29, 1981

Mr. Charles M. Easterling
Principal Assistant City Engineer
Hydrology
City of Albuquerque
P.O. Box 1293
Albuquerque, NM 87103

Re: Albuquerque Academy Summary Plat

Dear Chuck:

Enclosed is a copy of the Albuquerque Academy Summary Plat reflecting the parcels that were previously zoned by the Environmental Planning Commission. As you can see, the plat reflects the 100-year flood plain as defined in the Leonard Rice Study. We are providing this to you for review and will, in the near future, bring the original mylar for your signature.

If you have any questions concerning the plat, please feel free to contact me.

Sincerely yours,

Michial M. Emery, P.E.
Vice President

Enclosure

cc: Mr. Jim Kirkpatrick

MME/js
Job No. 1 086 0

RECEIVED
SEP 29 1981
CITY ENGINEER

City of Albuquerque
P.O. BOX 1293 ALBUQUERQUE, NEW MEXICO 87103

E19-D11

October 7, 1981

Mr. Michial M. Emery
Bohannan-Huston, Inc.
4125 Carlisle Blvd. N.E.
Albuquerque, New Mexico 87107

Re: ALBUQUERQUE ACADEMY SUMMARY PLAT

Dear Mike:

This letter is a follow-up to your submittal of September 29, 1981 concerning the referenced plat. Because of the drainage concerns in the area, this office requests that a conceptual Drainage Master Plan be prepared for the site. I have enclosed a letter from Mr. Bruno Conegliano which addresses concerns of the City and may provide a "starting point" for design.

I would be glad to discuss this topic with you at your convenience.

Very truly yours,

Charles M. Easterling
Principal Asst. City Engineer/Hydrology

CME/fs
Enclosure
cc: R. Leonard, AMAFCA

Academy Acres

City of Albuquerque

P.O. BOX 1293 ALBUQUERQUE, NEW MEXICO 87103

May 14, 1980

John T. Armstrong
Armstrong Engineering, Inc.
2709-J Pan American, N.E.
Albuquerque, New Mexico

Reference: Albuquerque Academy Drainage Report

Dear Mr. Armstrong:

In the course of discussions which were held both in the City Engineer's Office and in the office of AMAFCA in or about 1974, between representatives of the City, Mr. John Roberts, then Director of AMAFCA and representatives of the Albuquerque Academy, regarding the configuration of the proposed Wyoming Blvd., the consensus was reached that due to the inadequacy of the channel, crossing the freeway immediately to the north of the Far North Shopping Center, most of the runoff from the lands of the Academy, east of Wyoming Blvd., would be diverted to the north, to the Pino Arroyo.

At that time there was concern about the conditions of Academy Blvd., of the Bear Canyon Village development, and of Academy Acres to the west. The grades of Wyoming Blvd. were set at 0.5% since the alignment chosen to accommodate the desires of Albuquerque Academy was essentially parallel to the contours; therefore, the carrying capacity of this major arterial street is limited to 30-40 cfs.

At the time of these discussions, a rough estimate was made of the costs of the storm sewer which would have been necessary for the collection and the conveyance to the Bear Arroyo of the runoff generated by the Academy lands. The costs of these improvements, which would have been divided on a 50-50 ratio between the City and adjacent developers was estimated at $500.000. This cost was considered excessive and unacceptable, therefore a verbal committment was received from the representatives for the Albuquerque Academy, that reasonable efforts would be made to convey the runoff from the lands under discussion, directly to the Pino Arroyo.

On the basis of the consideration above, I have no choice but to disapprove drainage report as submitted.

MUNICIPAL DEVELOPMENT DEPARTMENT

Richard S. Heller, P.E., City Engineer ENGINEERING DIVISION Telephone (505) 766-7467

I refer you to Section 10A.2 of the subdivision ordinance which stipulates that no additional development can be allowed in the absence of adequate drainage provisions. The drainage report needs to be consistent with the design considerations used for Wyoming Blvd., therefore, the runoff from the lands of the Albuquerque Academy must be intercepted at suitable locations and conveyed to the north, to the Pino Arroyo. An option available to the Academy is that of participating in the cost of construction of an appropriate storm drainage facility. Such storm sewer should be capable of intercepting the flows discharged onto Wyoming Blvd., in excess of its carrying capacity and convey them to the north to the Pino Arroyo.

I believe that a judicious choice of diversionary earthern channels locations established on the basis of the concepts outlined above, would allow me to grant approval to the proposed new construction.

I am including for your use, a copy of an outline of the procedure that needs to be followed in establishing storm runoff detention facilities, such as the one that you proposed.

If you want to review these matters further, both Mr. Heller, and myself will be available at your convenience.

Very truly yours,

Bruno Conegliano
Assistant City Engineer/Hydrology

BC/lc
encl.
xc: Richard Leonard, AMAFCA
Richard Heller, City Engineer

CITY OF ALBUQUERQUE

ALBUQUERQUE, NEW MEXICO

INTER-OFFICE CORRESPONDENCE April 11, 1980 REF. NO._____

TO: Richard S. Heller, City Engineer

FROM: Bruno Conegliano, Assistant City Engineer/Hydrology B. C.

SUBJECT: Drainage Report for Albuquerque Academy

I received the attached report for additional development on Albuquerque Academy lands, and I feel that this report gives us an opportunity to approach the Academy Board of Trustees at a high level (i.e. Mr. Gerald D. Davenport or the Mayor) to see if we can obtain the cooperation of the Academy, in achieving a solution for the drainage and potential flooding problems in Wyoming Boulevard.

All the land east of Wyoming Blvd., and north of Academy Blvd. drains in an uncontrolled manner onto Wyoming Blvd.; this flow either impacts the shopping center and the subdivision immediately to the west, or is carried north to the Pino Arroyo. A rough estimate of the drainage area involved indicates that some 150 acres of land are intercepted by Wyoming Blvd., but when this public throughfare was designed and built the expectation was that the flows from the lands of Albuquerque Academy would be intercepted to the east and conveyed north to the Pino Arroyo (Re: Bob Kielich).

I am not aware of any comprehensive plans prepared by the Academy to protect the lands to the west from the large flows which could be anticipated to result from a 100 yr. storm occurrence. The topography attached with the report indicates that it would be feasible to construct a diversion channel essentially parallel to the countours to collect the runoff before it reaches Wyoming Blvd. and convey it to the north to the Pino Arroyo.

In view of the benefits that the community would receive from such a "non-structural" solution, it could even be suggested that the City would construct at its own cost such a diversionary facility on the Academy lands.

Please let me know where you want to go from here.

lc

ACADEMY DRAINAGE REPORT

RECEIVED
MAR 24 1980
CITY ENGINEER

ENGINEER'S DRAINAGE REPORT

FOR

ALBUQUERQUE ACADEMY

AT

NORTHEAST CORNER OF WYOMING & ACADEMY

JOHN T. ARMSTRONG
NEW MEXICO
6556
REGISTERED PROFESSIONAL ENGINEER

ARMSTRONG ENGINEERING, INC.
2709-J PAN AMERICAN, N.E.
ALBUQUERQUE, NEW MEXICO

MARCH 1980

ENGINEER'S DRAINAGE REPORT

for

ALBUQUERQUE ACADEMY

Purpose: This report presents a proposal to satisfy the Interim Drainage Guidelines of the City of Albuquerque, for improvements on the campus of the Albuquerque Academy. The improvements include additional paved parking, paved access roads, and a new building.

Climatological Information: Rainfall intensities used in this report were obtained from "Master Plan of Drainage City of Albuquerque, New Mexico and Environs" by Gorden Herkenhoff & Assoc. 1961.

$$i_{100} = \frac{189}{tc+25}$$

$$i_5 = 0.8\ i_{10} = 0.8\ \frac{(91)}{tc+24}$$

(Where 0.8 is the ratio of 5 year 6-hour precipitation, 1.6 inches, to the 10 year 6-hour precipitation, 2.0 inches).

i_{100} = 100 year rainfall intensity in inches per hour.

i_5 = 5 year rainfall intensity in inches per hour.

t_c = Time of concentration in minutes, is the time from the beginning of rainfall until all parts of the water shed are contributing to run-off and was computed using average velocities from figure 3-1, attached, from Soil Conservation Service technical release No. 55 "Urban Hydrology for Small Watersheds."

Volume calculations were based on the 100 year 6-hour precipitation of 2.4 inches.

Run-Off Calculations: The "Rational Method" was used to calculate the run-off. The Rational formula is:

$$Q = CiA$$

Where:

Q = Quantity of run-off expressed in cubic feet per second.

C = Coefficient of run-off expressed as ratio or run-off to rainfall.

i = Rainfall intensity expressed in inches per hour.

A = Drainage area expressed in acres.

The values of C used were 0.9 for paved areas, 0.4 for undisturbed natural ground and 0.5 for compacted, but unpaved, earth.

Ponded Volume and Discharge Calculation: The volume of water ponded is the developed 100 year volume less the undeveloped 100 year volume. The positive discharge from ponding areas is the flow equivalent to that of a storm of 5 year frequency and the ultimate discharge is the equivalent to a developed 100 year storm.

The outlet discharges were taken from Chart 5, attached, from Bureau of Public Roads Hydraulic Engineering Circular No. 5, "Hydraulic Charts for the Selection of Highway Culverts."

Discussion: The project is located on the northeast corner of Wyoming Blvd. and Academy Road in the City of Albuquerque. The project is bordered on the north by the Arroyo del Pino, a major arroyo. The calculations indicate that required ponding for improvements on the north side (within the drainage area of the Arroyo del Pino) is 0.24 acre-feet while the requirements for the south area (draining to Wyoming Blvd.) is 0.52 acre-feet.

In the interest of good engineering practice and knowing that it will benefit all parties concerned to keep as much water as possible out of Wyoming Blvd. and the fact that the Arroyo del Pino is a major arroyo, it was decided to handle the ponding requirements of the entire project within the south drainage area.

The run-off calculations, pond volume calculations and a drainage plan with topography are attached to this report.

Existing Conditions

5 year run-off for positive discharge @ Pond.

Watershed Area = 67 Acres
Watercourse Length = 4200 ft
Elevation difference = 5552 − 5422 = 130 ft

$$\text{Slope} = \frac{130}{4200}(100) = 3^{10}\ \%$$

Average Velocity (from Figure 3-1) = 1^{75} ft/sec

$$t_c = \left(\frac{4200\ \text{ft}}{1^{75}\ \text{ft/sec}}\right)\left(\frac{1\ \text{min}}{60\ \text{sec}}\right) = 40^{0}\ \text{min}$$

Coefficient of run-off:

4 Acres	Paved @ $C = 0^{9}$	=	3^{6}
63 Acres	Undeveloped @ $C = 0^{4}$	=	25^{2}
67 Acres	Total	=	28^{8}

Composite $C = 28^{8}/67 = 0^{43}$

$$i_5 = \frac{0^{8}(91)}{40+24} = 1^{14}\ \text{in-hr}$$

$$Q_5 = C i_5 A = (0^{43})(1^{14})(67) = 32^{8}\ \text{cfs}$$

Proposed Conditions

100 year run-off for total discharge @ pond

Watershed Area = 67 Acres
Water Course Length = 4180 ft
Elevation Difference = 130 ft

$$\text{Slope} = \frac{130}{4180}(100) = 3^{11}\%$$

Average Velocity (from Figure 3-1) = 1^{75} ft/sec

$$t_c = \left(\frac{4180}{1^{75}}\right)\left(\frac{1}{60}\right) = 39^{81} \text{ min}$$

Coefficient of run-off:

8 Acres Paved @	@ C = 0^{9}	=	7^{2}
6 Acres Graded & Compacted	@ C = 0^{5}	=	3^{0}
53 Acres Undeveloped	@ C = 0^{4}	=	21^{2}
67 Acres Total		=	31^{4}

Composite C = $31^{4}/67 = 0^{47}$

$$i_{100} = \frac{189}{39^{81}+25} = 2^{92} \text{ in / hr}$$

$$Q_{100} = C\, i_{100}\, A = (0^{47})(2^{92})(67) = 92^{0} \text{ cfs}$$

Pond Discharge

Positive Discharge:

24"Ø CMP (Projecting Entrance) Invert = 20.0
Overflow starts @ Elev 25.0

Headwater = 5.0 ft ⇒ HW/D = 2.5

Q = 26.5 cfs < Q_5 = 32.8 cfs ok

Ultimate Discharge:

24"Ø CMP (Projecting Entrance) Invert = 20.0

42"Ø CMP (Projecting Entrance) Invert = 25.0

Assume High Headwater Elev = 29.0 (Top Dam Elev. = 30.0)

24"Ø $HW/D = \frac{29-20}{2} = 4.5$

42"Ø $HW/D = \frac{29-25}{3.5} = 1.14$

$Q_{24"Ø}$ = 37 cfs
$Q_{42"Ø}$ = 56 cfs
Q_{Total} = 93 cfs > Q_{100} ok

Pond Volume

Proposed Conditions:

New Paved Areas and Building = 6.4 Acres @ C = 0.9
Area Graded & Compacted = 6.0 Acres @ C = 0.5

100 year 6-Hr precipitation = 2.4 inches

Required Volume = $[(0.9-0.4)6.4 + (0.5-0.4)6.0][2.4/12]$ = 0.76 Acre-ft

Pond Volume as shown on drainage plan (see attached)

Invert of 24" ø CMP = 20.0
Invert of 42" ø CMP = 25.0

Therefore pond is 5.0 ft deep at dam when overflow starts

Area inside 22.0 contour = 0.17 Acre (4 ft Deep) = 0.68 Ac-ft

Area between 24.0 & 22.0 Contours = 0.30 Acre (2 ft Deep) = 0.60 Ac-ft

Area between 25.0 & 24.0 Contours = 0.13 Acre (0.5 ft Deep) = 0.07 Ac-ft

Total 1.35 Ac-ft

Pond Volume = 1.35 Ac-ft > Required Volume 0.76 Ac-ft ok

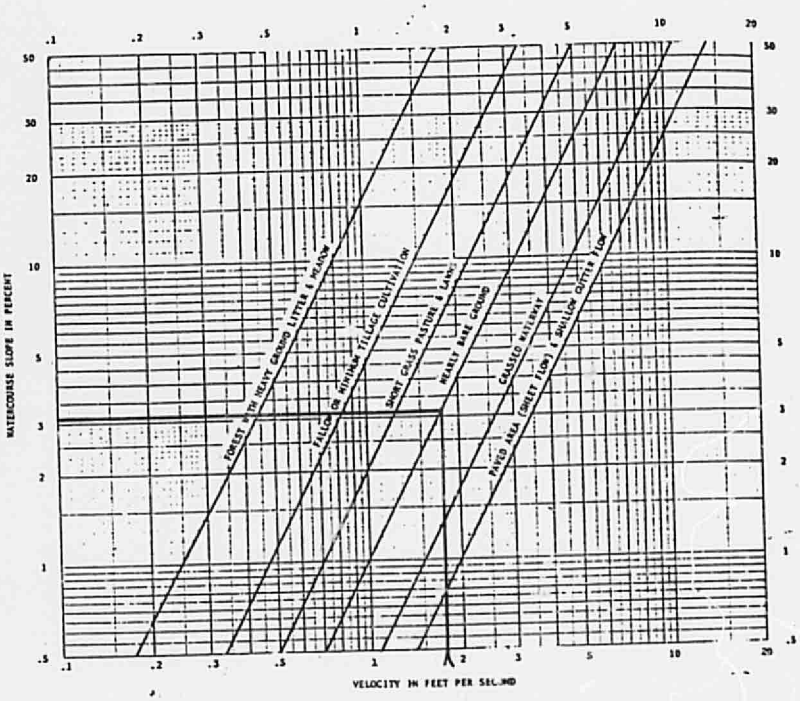

Figure 3-1.--Average velocities for estimating travel time for overland flow.

From Soil Conservation Service technical release No. 55 "Urban Hydrology for Small Watersheds."

Time of concentration

$$tc(\text{in minutes}) = \frac{\text{flow length}}{\text{Average Velocity}} \times \frac{1 \text{ min.}}{60 \text{ Sec.}}$$

CHART 5

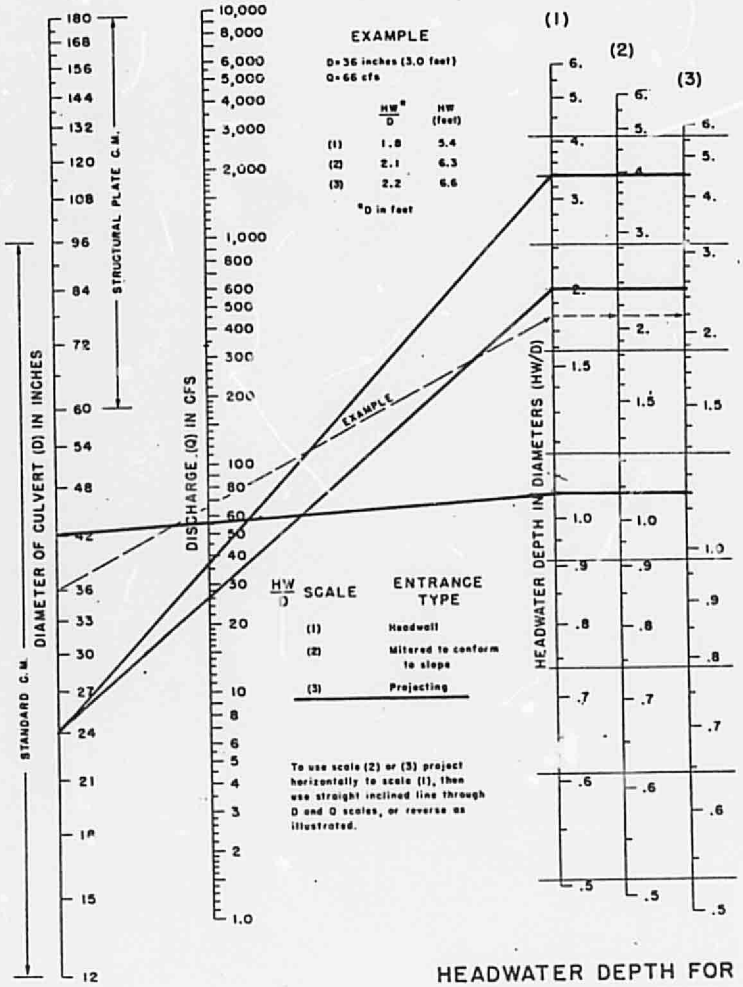

HEADWATER DEPTH FOR
C. M. PIPE CULVERTS
WITH INLET CONTROL

BUREAU OF PUBLIC ROADS JAN. 1963

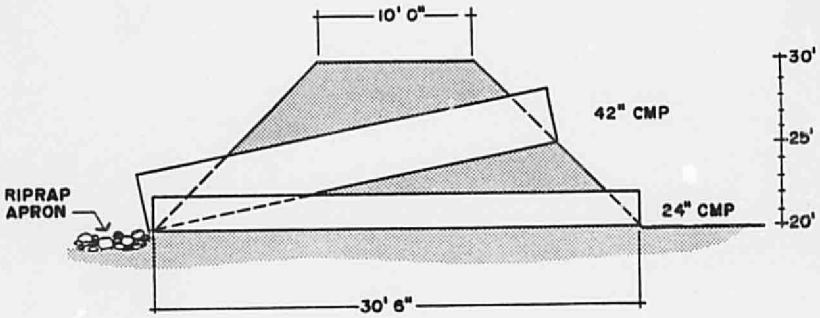

SECTION AA

SCALE 1/8" = 1'-0"

2316