HYDROLOGY E20/D13A 4 PLANS

E20/D13a

4 Plans

FILE COPY

City of Albuquerque

P.O. BOX 1293 ALBUQUERQUE, NEW MEXICO 87103

Ken Schultz
Mayor

UTILITY DEVELOPMENT DIVISION
HYDROLOGY SECTION
(505) 763-2650

April 9, 1987

Gordon A. Walhood, Jr., P.E.
Bohannan-Huston, Inc.
7500 Jefferson Street, NE
Albuquerque, New Mexico 87109

RE: DRAINAGE & GRADING PLAN SUBMITTAL OF ONE SYCAMORE PLAZA
RECEIVED MARCH 19, 1987 FOR BUILDING PERMIT APPROVAL
(E-20/D13A) (PROJECT 3175)

Dear Gordon:

The above referenced submittal, revised March 10, 1987, is approved for Building Permit sign-off by Hydrology. Include all the sheets not part of the Work Order with the construction sets routed for Building Permit sign-off.

The portion of the 48" RCP storm drain to be constructed within the public right-of-way must be included with the Work Order, Project No. 3175. The storm drain constructed outside of public right-of-way must be either inspected by Rick Duran, the Hydrology Inspector, or else certified by the Project Engineer prior to issuance of Certificate of Occupancy.

If you have any questions, call me at 768-2650.

Cordially,

Roger A. Green, PE

Roger A. Green, P.E.
C.E./Hydrology Section

cc: Andre Houle, DRC
Carl Rodolph, Brown & Assoc.

RAG/bsj

BOHANNAN-HUSTON INC.

Courtyard I 7500 Jefferson Street, N.E. Albuquerque, NM 87109
(505) 823-1000

Transmittal

E20/D13A

To: CITY HYDROLOGY
4TH FLR CITY HALL

☐ Parcel post ☒ Messenger
☐ First Class ☐ UPS
☐ Express Mail ☐ Air Freight
☐ Bus ☐

Attention: BARBARA OR ROGER GREEN

Date: 4/6/87 Our job number: 63322

Your job number:

Job: SYCAMORE PLAZA.

We are enclosing:	For:
2 COPIES OF PLATE III	

RECEIVED
APR 06 1987
HYDROLOGY SECTION

Comments:
PLEASE INSERT INTO REPORT FOR SYCAMORE PLAZA DRAINAGE-
THIS PLATE REFLECTS COMMENTS FROM DRC AND UTILITY DEVELOPMENT.

By: Gordon Walkup thank you

Rec'd by: Barbara Lang Date: 4/6/87

☐ Please Return Signed Yellow Copy

3/86

PROJECT MEMO

Bohannan-Huston, Inc.
7500 Jefferson, N.E.
Albuquerque, New Mexico 87109

PROJECT:

TO: Roger Green, Hydrology Dept.
FROM: Gordon Walhood, Jr.
DATE: 3-10-87
RE: Submittal For Final Building Permit Approval
BHI JOB NO.: 63322

RECEIVED
MAR 19 1987
HYDROLOGY SECTION

Roger;

Attached you will find the re-submittal of the plates for the Sycamore Plaza Final Drainage Report. Incorporated in the set are your comments from the earlier submittal as well as the comments from the DRC with respect to the adjacent utilities.

If you require any further information, please contact me at your convenience.

Sincerely,

Gordon

Gordon Walhood, Jr., P.E.

DRAINAGE INFORMATION SHEET

E20/D13

OJECT TITLE: Sycamore Plaza ZONE ATLAS/DRAINAGE FILE # E-19 to 20, F-19 to 20

GAL DESCRIPTION: Tract 1A1 Lands of William O. & Mary L. Edward

TY ADDRESS: Wyoming at Academy

IGINEERING FIRM: Bohannan-Huston, Inc. CONTACT: Gordon Walhood

ADDRESS: 7500 Jefferson St., NE PHONE: 823-1000

NER:/DEVELOPER: Brown & Associates CONTACT: Carl Rodolph

ADDRESS: 3400 Candelaria Rd., NE PHONE: 883-1674

RCHITECT: Barker-Bol & Associates CONTACT: Chris Rasmussen

ADDRESS: 209 Gold Ave., SW PHONE: 842-6789

URVEYOR: Bohannan-Huston, Inc. CONTACT: A. Dwain Weaver

ADDRESS: 7500 Jefferson St., NE PHONE: 823-1000

CONTRACTOR: Bradbury & Stamm, Inc. CONTACT: Richard Vittitow

ADDRESS: 1217 First St., NW PHONE: 765-1200

PRE-DESIGN MEETING:

X YES

__ NO

__ COPY OF CONFERENCE RECAP SHEET PROVIDED

RECEIVED MAR 19 1987 HYDROLOGY SECTION

DRB NO. 86-490

EPC NO. Z-79-43-2

PROJECT NO. 3175

TYPE OF SUBMITTAL:

X DRAINAGE REPORT

__ DRAINAGE PLAN

__ CONCEPTUAL GRADING & DRAIN PLAN

__ GRADING PLAN

__ EROSION CONTROL PLAN

__ ENGINEER'S CERTIFICATION

CHECK TYPE OF APPROVAL SOUGHT:

__ SECTOR PLAN APPROVAL

__ SKETCH PLAT APPROVAL

__ PRELIMINARY PLAT APPROVAL

__ SITE DEVELOPMENT PLAN APPROVAL

__ FINAL PLAT APPROVAL

X BUILDING PERMIT APPROVAL

__ FOUNDATION PERMIT APPROVAL

__ CERTIFICATE OF OCCUPANCY APPROVAL

__ ROUGH GRADING PERMIT APPROVAL

X GRADING/PAVING PERMIT APPROVAL

__ OTHER _____ (SPECIFY).

DATE SUBMITTED: 3/11/87

BY: Gordon Walhood, Jr., PE

BOHANNAN-HUSTON INC.

Courtyard I 7500 Jefferson Street, N.E. Albuquerque, NM 87109
(505) 823-1000

Transmittal

To: HYDROLOGY DEPT.
CITY OF ALBUQ.
4TH FLOOR CITY HALL

☐ Parcel post ☒ Messenger
☐ First Class ☐ UPS
☐ Express Mail ☐ Air Freight
☐ Bus ☐ ____

Attention: BARBARA OR ROGER

Date: 3/18/87

Our job number: 63320

Your job number: (E-20/D-13A)

Job: SYCAMORE PLAZA

We are enclosing:	For:
2 SETS OF DRNG PLATES	

RECEIVED MAR 19 1987 HYDROLOGY SECTION

Comments: TO REPLACE PLATES SENT ON 3-10-87.

By: Gordon A. Walhood, Jr. thank you

Rec'd by: [signature] Date: 3/19/87

☐ Please Return Signed Yellow Copy

3/86

City of Albuquerque

P.O. BOX 1293 ALBUQUERQUE, NEW MEXICO 87103

Mayor
Ken Schultz

RECEIVED
MAR 09 1987
HYDROLOGY SECTION

DESIGN REVIEW COMMITTEE MEETING 2/25/87 3:00 p.m.

E20/D13A

PROJECT: One Sycamore Plaza, Project #3175

CONSULTANT: Bohannan-Huston, Inc.

IN ATTENDANCE: Bob Hogrefe, Civil Engineer/Design Review Section
Dave Harmon, Traffic Engineering
Bill Westmoreland, PWD/Engineering-Utility Development
Roger Green, PWD/Engineering-Utility Dev.-Hydrology
Gordon A. Walhood, Jr., Bohannan-Huston, Inc.

The above mentioned project was submitted to the DRC for preliminary review. The following comments were discussed:

1. A cover sheet will be needed, followed by proposed replat and site plan.

2. Site plan indicates items to be constructed over storm drain and sewer in the proposed easement. This will require clearance with the Utility Development Division and an encroachment agreement is necessary. Also, please indicate "private drainage easement".

3. Need initial bearing for storm drain at existing wingwall, as well as horizontal control throughout storm drain alignment, if plans are for work order construction of storm sewer.

4. Sheet 1 - Is there a crossing conflict with the storm drain and sanitary sewer near Station 0+60?

5. The alignment for the sanitary sewer does not follow the availability analysis letter. We will need this first phase confirmed with an updated analysis. (also for water and fire flow requirements.) Mr. Westmoreland will be contacting the consultant regarding these items.

6. Sheet 2 - Please show easement applicable on this sheet.

7. Sheet 2 - Please provide baseline identification and offsets.

8. Sheet 2 - It appears as though both water and sewer lines will conflict with median curb & gutter. It is recommended to relocate the sanitary sewer to the centerline of the road and to locate the waterline a minimum of 4 ft. to the north of the median by means of a fitting at water tie-in point.

9. Sheet 2 - If there are any sanitary sewer service stub-outs at this time, it would be appropriate to locate them on this sheet, showing locations and inverts.

10. Sheet 2 - It would appear that fire hydrants indicated may fall within the 72 ft. easement. Please confirm by showing the easement widths on this drawing.

BH/tar

cc: Attendees
Andre Houle, DRC Chairman/Design Review Section

FILE COPY

City of Albuquerque

P.O. BOX 1293 ALBUQUERQUE, NEW MEXICO 87103

Ken Schultz
Mayor

UTILITY DEVELOPMENT DIVISION
HYDROLOGY SECTION
(505) 768-2650

February 27, 1987

Gordon A. Walhood, Jr., P.E.
Bohannan-Huston, Inc.
7500 Jefferson Street, NE
Albuquerque, New Mexico 87109

RE: DRAINAGE REPORT SUBMITTAL OF ONE SYCAMORE PLAZA RECEIVED FEBRUARY 11, 1987 FOR BUILDING PERMIT APPROVAL (E-20/D13A)

Dear Gordon:

I have reviewed the above referenced submittal dated February 4, 1987, and have the following comments to be addressed prior to approval for Building Permit.

1. On the Grading and Drainage Plan, the following required information is lacking:

   A. Standard details for Type "D" inlets.

   B. Existing TC/FL elevations along Wyoming Boulevard.

   C. Standard details for manholes.

   D. Water block elevations on the south entrance road.

   E. A North arrow.

   F. A TBM adjacent to the project site.

   G. Size of connector pipe from 18 square inch inlets to main drain lines.

   H. Invert elevations of 6" PVC collector drain outfalling to the north.

   I. In erosion control plan to keep sediment out of public F.D.W. during construction.

THIS MICROIMAGE IS THE BEST POSSIBLE REPRODUCTION DUE TO THE POOR QUALITY OF THE ORIGINAL DOCUMENT

2. On the storm drain Sheet 1 of 3, provide the following information:

   A. Extent of existing 48" RCP at outlet.

   B. Location of laterals into manholes or main line.

   C. HGL, Q, & V.

   D. Label inlet types and connector pipe sizes.

3. On the storm drain and drainage details Sheet 3 of 3, provide the following information:

   A. Typical cross section, parallel to concrete channel, across the berm discharge protection.

   B. Manhole and catch basin details, unless standard City of Albuquerque details are referenced.

If you have any questions, call me at 768-2650.

Cordially,

Roger A. Green, PE

Roger A. Green, P.E.
C.E./Hydrology Section

Std. Form Letter to:

Dar. Radolph, Brown & Assoc.

RAG/ag

820/D13

ENGINEERS ARCHITECTS PHOTOGRAMMETRISTS

BOHANNAN-HUSTON INC.

COURTYARD I, 7500 JEFFERSON STREET N.E. ALBUQUERQUE, NEW MEXICO 87109 (505) 823-1000
UNIVERSITY PLAZA, SUITE 104, 330 GARFIELD SANTA FE, NEW MEXICO 87501 (505) 988-7671
6713 VISCOUNT BLVD EL PASO, TEXAS 79925 (915) 778-4491

February 10, 1987

Mr. Roger Green
Hydrology Department
City of Albuquerque
P.O. Box 1293
Albuquerque, NM 87103

RECEIVED
FEB 11 1987
HYDROLOGY SECTION

Re: Final Drainage Report - One Sycamore Plaza
Map Grids E & F, 19 & 20., DRB No. 86-490

Dear Roger:

Enclosed are two copies of the final drainage report for the referenced parcel. As you will recall, the conceptual grading and drainage plan was submitted and approved on November 5, 1986.

This final plan also includes the calculations, plan and profile sheets, and details for the private storm drain line. In conjunction with this construction, we will be required to construct a small portion within the right-of-way for the Bear Tributary. In compliance with the request by your office, we are including the S.O. 19 with this submittal.

The owner has also notified us that in the future, a plat may need to be filed to "partition" the buildings from the overall larger tract. We have discussed this with Fred Aguirre and assured him that if there are any further comments, we will discuss them with your representative at the DRB hearing for the final plat.

As you may notice in the calculations, the private storm drain line is more than adequate for the 100-year developed flow. However, for hydraulic computations of loss at bends, etc. we assumed full capacity of the pipe since final configuration of the total site drainage system is not known at this time.

If you have any questions or comments, please contact me at this office.

Sincerely,

Gordon A Walhood Jr

Gordon A. Walhood, Jr., P.E.
Project Engineer

Enclosures

GAW/bl
Job No. 6 332 2

PRINCIPALS
LARRY W. HUSTON
MICHIAL M. EMERY, P.E.
DANA C. WOOD, P.E.
ANDRES ARAGON VIAMONTE
DARRELL L. WADE, P.E.
JAMES V. DOMENICK, P.E.
BRIAN G. BURNETT, P.E.

FILE COPY

City of Albuquerque

P.O. BOX 1293 ALBUQUERQUE, NEW MEXICO 87103

HYDROLOGY SECTION
123 Central NW, Albuquerque, NM 87102
(505) 766-7644

November 5, 1986

Gordon Walhood, Jr., P.E.
Schannan-Huston, Inc.
7500 Jefferson Street, NE
Albuquerque, New Mexico 87109

RE: CONCEPTUAL GRADING & DRAINAGE PLAN FOR ONE SYCAMORE PLAZA
RECEIVED OCTOBER 17, 1986 FOR SITE DEVELOPMENT PLAN
APPROVAL (E-20/D13A)

Dear Gordon:

The above referenced submittal, dated September 25, 1986, is approved for Site Development Plan sign-off by the City Engineer, although the DRB may have other requirements before sign-off.

A detailed Drainage and Grading Plan will be required at time of Building Permit request.

If you have any questions, call me at 768-2650.

Cordially,

Roger A. Green, PE

Roger A. Green, P.E.
C.E./Hydrology Section

cc: Carl Rodolph; Brown & Associates

RAG/bsj

ENGINEERS ARCHITECTS PHOTOGRAMMETRI

BOHANNAN-HUSTON INC.

COURTYARD I, 7500 JEFFERSON STREET, N.E. ALBUQUERQUE, NEW MEXICO 87109 (505) 823-1000
UNIVERSITY PLAZA, SUITE 107, 330 GARFIELD SANTA FE, NEW MEXICO 87501 (505) 988-7671
6713 VISCOUNT BLVD. EL PASO, TEXAS 79925 (915) 779-4491

October 13, 1986

RECEIVED
OCT 17 1986
HYDROLOGY SECTION

Mr. Fred Aguirre
City of Albuquerque
P.O. Box 1293
Albuquerque, NM 87103

Re: Sycamore Plaza Conceptual Drainage Report (E20/D13)

Dear Fred:

Enclosed are copies of a Conceptual Drainage Plan for Sycamore Plaza, Phase One. Included in this report are the plates as submitted for the November 20, 1986 EPC Hearing, and backup calculations incorporating your comments of the July 29, 1986 DRB and our August 15, 1986 meeting with Carl Rodolph.

Once this Conceptual Plan is approved, we will proceed with a final Drainage Report. That final report will also include additional items such as the storm drain plan and profile (construction drawing), the curb rundown locations, and final roof drain locations.

If you require any further information or have any questions, please contact me at this office.

Sincerely,

Gordon A Walhood Jr.

Gordon Walhood, Jr., P.E.

Enclosures

GAW/cs
Job No. 6 332 2

PRINCIPALS
LARRY W. HUSTON
MICHAL M. EMERY, P.E.
DANA C. WOOD, P.E.
ANDRES ARAGON VIAMONTE
DARRELL L. WADE, P.E.
JAMES V. DOMENICK, P.E.
BRIAN G. BURNETT, P.E.

BOHANNAN-HUSTON

ONE SYCAMORE PLAZA
FINAL GRADING
AND DRAINAGE
REPORT

INC.

ONE SYCAMORE PLAZA
FINAL GRADING
AND DRAINAGE
REPORT

GORDON A. WALHOOD, JR.
NEW MEXICO
No.
7968
REGISTERED PROFESSIONAL ENGINEER

Gordon A. Walhood Jr.
2/10/87

DRAINAGE INFORMATION SHEET

PROJECT TITLE: Sycamore Plaza ZONE ATLAS/DRAINAGE FILE # E-19 to 20, F-19 to 20

LEGAL DESCRIPTION: Tract 1A1 Lands of William O. & Mary L. Edward

CITY ADDRESS: Wyoming at Academy

ENGINEERING FIRM: Bohannan-Huston, Inc. CONTACT: Gordon Walhood

ADDRESS: 7500 Jefferson St., NE PHONE: 823-1000

OWNER:/DEVELOPER: Brown & Associates CONTACT: Carl Rodolph

ADDRESS: 3400 Candelaria Rd., NE PHONE: 883-1674

ARCHITECT: Barker-Bol & Associates CONTACT: Chris Rasmussen

ADDRESS: 209 Gold Ave., SW PHONE: 842-6789

SURVEYOR: Bohannan-Huston, Inc. CONTACT: A. Dwain Weaver

ADDRESS: 7500 Jefferson St., NE PHONE: 823-1000

CONTRACTOR: Bradbury & Stamm, Inc. CONTACT: Richard Vittitow

ADDRESS: 1217 First St., NW PHONE: 765-1200

PRE-DESIGN MEETING:

X YES

___ NO

___ COPY OF CONFERENCE RECAP SHEET PROVIDED

RECEIVED FEB 11 1987 HYDROLOGY SECTION

DRB NO. 86-490

EPC NO. Z-79-43-2

PROJECT NO. _____

TYPE OF SUBMITTAL:

X DRAINAGE REPORT

___ DRAINAGE PLAN

___ CONCEPTUAL GRADING & DRAIN PLAN

___ GRADING PLAN

___ EROSION CONTROL PLAN

___ ENGINEER'S CERTIFICATION

CHECK TYPE OF APPROVAL SOUGHT:

___ SECTOR PLAN APPROVAL

___ SKETCH PLAT APPROVAL

___ PRELIMINARY PLAT APPROVAL

___ SITE DEVELOPMENT PLAN APPROVAL

___ FINAL PLAT APPROVAL

X BUILDING PERMIT APPROVAL

___ FOUNDATION PERMIT APPROVAL

___ CERTIFICATE OF OCCUPANCY APPROVAL

___ ROUGH GRADING PERMIT APPROVAL

X GRADING/PAVING PERMIT APPROVAL

___ OTHER _____ (SPECIFY).

DATE SUBMITTED: ~~September 26, 1986~~ FEB 10, 1987

BY: Gordon Walhood, Jr., PE

REV. 10/85

TABLE OF CONTENTS

	PAGE
INTRODUCTION	1
LOCATION, LEGAL DESCRIPTION AND ZONING	1
UPLAND DRAINAGE	1
BUILDING SITE DRAINAGE	2
APPURTENANCES	3

APPENDIX A - CALCULATIONS FOR CONCEPTUAL GRADING AND DRAINAGE

PLATE I - UPLAND GRADING AND DRAINAGE PLAN

PLATE II - SITE GRADING AND DRAINAGE PLAN

PLAATE III - STORM SEWER PLAN & PROFILE

PLATE IV - STORM SEWER DETAILS

INTRODUCTION

The following is the final Drainage Report for Sycamore Plaza Phase I. The parcel to be developed is in the southwest corner of the Sycamore Plaza (Edward's Tract) Office Park. The site is about 5.3 acres of the larger 65.4 acre tract. Development of the parcel will be in accordance with the Conceptual Grading and Drainage Plan dated September 25, 1986 for the tract; and in accordance with requirements set forth in the DRB (1-6-37), EPC (11-20-86) and by City agencies for the specific parcel.

LOCATION, LEGAL DESCRIPTION AND ZONING

The site to be developed is the 5.3 acre parcel located in the southwest corner of the larger Edward's Tract of 63.5 acres. The larger tract is bounded on the north by Academy Boulevard, on the east by Moon Street, on the south by the Bear Tributary Arroyo Right-of-Way, and on the west by Wyoming Boulevard.

The larger tract is described as Tracts 1A1, 1A2, and 2A, Lands of William O. and Mary L. Edward, filed April 9, 1984. The entire site is 65.37 acres and is located in Map Grids E 19-20 and F 19-20.

The majority of the tract is zoned C-2 with the exception of 9.9 acres of R-2 in the southeast corner of the parcel.

The site soils are composed of the decomposed alluvial material of the Embudo Series (EmB) and is designated as Hydrologic Soil Type B.

UPLAND DRAINAGE

To the east and north of the building site are upland basins located within the larger tract. These two, Basin A and Basin B, are undeveloped and are approximately 30.1 and 29.0 acres in area respectively.

Basin A flows westerly to a swale located along the west edge of the property and to the north of Road A (see Plate I). The flows currently generated by this basin will be 29.7 cfs in the undeveloped state.

To handle this flow, a private 36" RCP storm drain will be constructed to carry these flows to the south and tie to 80 feet of 48" diameter RCP tying to the stub out in the northeast wing wall of the Bear Tributary Arroyo wing wall. The anticipated developed flows from the upland basin of 55.9 cfs (per upland Grading and Drainage Plan); along with the site inlets flow of 26.1 for a total of 82 cfs is well below the 142.9 cfs capacity of the downstream end.

BUILDING SITE DRAINAGE

The development of the building site in the southwest corner of the larger tract involves a 6.2 acre drainage area. The development involves the construction of an office building, parking structure, plaza area, perimeter streets, and landscaping. The basin is further divided into subbasins C-1 through C-4. The basin lines and flow paths are shown on Plate II.

Basin C-1 includes the roof and landscaping on the northwest corner of the building. Basin C-3 includes a large portion of the parking structure, south road, and upland area to the west of the swale. These two subbasins meet at the low grade in Road C southwest of the office building. At that point they drop into the inlet and then into the storm sewer. In the event of plugging of the inlet, the runoff will overflow the curb and flow through the swale to the south and discharge at the existing concrete rundown. The total flow at this point is

Basin C-2 includes the north portion of the roof, plaza area, and landscaped area north of these areas. The total flow of this area is 5.5 cfs. This flow runs to the south curb flowline of the north road and west to a single Type C inlet at the water block. The capacity of the inlet is 15 cfs, well in excess of the 100-year flow. The flow in the inlet is deposited into the 36" private storm drain to the west.

Basin C-4 is located on and contains the flows from the north side of Road A. The flow of 1.4 cfs in this small stretch is conveyed west in the north gutter and intercepted by an inlet adjacent to the waterblock. This inlet flow is also deposited into the 36" private storm drain beneath the street.

The calculations for the hydraulics of the storm sewer are included in the Appendix. The plan and profile of the storm sewer are shown on Plate III. Sections and notes are also given for the construction of the inlet and manhole. This plan and profile sheet and details will be included in the construction drawings for the site.

Basin B is located on the southern half of the larger tract. The basin currently flows westerly and discharges into Bear Tributary Arroyo at the existing concrete rundown apron. Basin B currently generates about 29.1 cfs in flow for the 100-year event.

In conjunction with the development, a swale will be constructed to the east of the building site (see Plate II). This swale will intercept and convey the upland flow from Basin B to the Bear Tributary Arroyo. This swale prevents the accumulation of runoff and sediment in Road C. The flows along the swale will be 29.1 cfs and flow at a velocity of about 3 feet per second. The flow depth is .72 ft. leaving a minimum freeboard of 1.3 feet.

APPURTENANCES

The landscaping and grading at the site have been designed to provide positive overland flow of storm runoff. In addition to this, there will also be a collector system of four small 18" square inlets and a roof drain system to intercept nuisance flows resulting from lesser storm events and landscape overspray. The PVC drain lines tying these inlets to the private storm drain system will be maintained by the owner. In the event of plugging, positive drainage is still assured by grading.

CALCULATIONS FOR FINAL GRADING AND DRAINAGE

ONE SYCAMORE PLAZA WYOMING AND ACADEMY

JAN. 15, 1986

BY
BOHANNAN-HUSTON, INC.
7500 JEFFERSON, NE
ALBUQUERQUE, NM 87109

APPENDIX A

RUN OFF FACTORS

Given: 1. Parcel undeveloped with typical sparse vegetation

2. Decomposed Granite soil type of silty gravelly sands per Western Tech Soils Report 32267050

3. Soils Type EmB. Hydrologic Soil Type B

4. 0% impervious C factor = .34

Times of Concentration, Intensity & Flows.

BASIN A: Longest distance "overland" from analysis point to top of Basin A is 2000 ft. Drop = 58 ft $S = \frac{58}{2000} = .029$

Using DPM Plate 22.2, B-1

velocity = 1.1 ft/sec

Time of conc = $\frac{2000}{1.1}$ = 1818 secs = 30.3 min

Rainfall I = 2.4 in.

Modif factor = 1.21 from DPM 22.2 D-2

$Q = CIA = .34(2.4 \times 1.21)(30.1 ac) = 29.7$ cfs

BOHANNAN-HUSTON INC.

PROJECT NAME SYCAMORE PLAZA SHEET 1 OF 20

PROJECT NO. 63322 BY GW DATE 9/86

SUBJECT DRAIN CH'D ✓ DATE 1/87

Basin B – length of Basin = 1900 ft.

Velocity = 1.1 ft/sec

Time of Conc = $\frac{1900}{1.1}$ = 1727 sec

$T_c = \frac{1727}{60} = 28.8$ min

Mod factor = $6.84(28.8)^{-.51} = 1.23$

$I = 2.4(1.23) = 2.95$ in/hr

$Q = CIA$

$Q = .34(2.95)(29.0) = 29.1$ cfs.

Remaining Basin C will be analyzed separately in detail. Approximate area of Basin C is 6.30 acres.

BOHANNAN-HUSTON INC.

PROJECT NAME	SYCAMORE	SHEET	2	OF	20
PROJECT NO.	63322	BY	GW	DATE	9/86
SUBJECT	DRNG	CH'D	✓	DATE	1/87

UPLAND FLOWS
SWALE DESIGN;

Reference DPM Section 22.3
For Undeveloped Gravelly Surfaces
$n = .030$ DPM 22.3 Page 29

Flow Rate at lower end of Berm = 29.1 cfs.

Typical Berm Parameters

$$\text{Slope} = \frac{5460^{5} - 5457^{52}}{350'} = \frac{3'}{350'} = .86\%$$

Assume Unlined per DPM 22.3 Pg 62
Side Slope = 3:1
Slope = .0086
$n = .030$
Flow Rate = 29.1 Cfs
Using Mannings Eq = depth ≈ .62 ft
Flow Velocity = 3.30 fps ≈ 3.0 (See Printout)
Depth ≈ .72 ft
Wetted Perimeter = 14.5' ft

Free board Req'd Per DPM Sect 22.3 61.1

$$\text{Freeboard} = 1.0 + .025\,Vd^{1/3}$$
$$= 1.0 + .025(3.3).72^{1/3} = 1.07 \text{ feet}$$

USE 2'-0" min depth > 1.8'

BOHANNAN-HUSTON INC.

PROJECT NAME	SYCAMORE	SHEET	3	OF	20
PROJECT NO.	63322	BY	CAW	DATE	9/96
SUBJECT	DRNG	CH'D	V	DATE	1/97

FLOW INTO BEAR TRIBUTARY

$Q_{100\ yr} = 1520$ cfs per City Proj #1930

% of main channel flow = $\frac{29 cfs}{1520 cfs} = 1.9\%$

1.9% < 3 to 6% ∴ no significant wave action induced in channel. (PER DPM)

Since Q < 50 cfs "Swale" is not classified as a berm, however.

Meets criteria for side slope, bank protection top width, free board

BOHANNAN-HUSTON INC.

PROJECT NAME SYCAMORE SHEET 4 OF 20

PROJECT NO. 63322 BY GW DATE 9/86

SUBJECT DRNG CH'D DATE

BASIN C - SITE DEVELOPMENT AREA

TOTAL ACREA = 6.2 ACRES

SUB-BASIN DESCRIPTIONS

MARK	% IMP	% LAND-SCAPE	Aggregate C-Factor	I	A	Q_{100} yr
C-1	39%	61%	.59	5.28	.38	1.2
C-2	73%	27%	.81	5.28	1.29	5.5
C-3	46%	54%	.63	5.28	4.25	14.1
C-4	100%	0%	.98	5.28	.28	1.4
					6.20	22.2

Time of Concentrations all less than 10 minutes

I = 2.4 x Mod.f factor = 2.4 x 2.2 = 5.28 in/hr.

C factor Landscape = .34

C factor Parking, roofs, = .98

For C-1 C = .39(.98) + .61(.34) = .59

& C-2, C-3, C-4 etc.

Undeveloped Flow

Approx Q = CIA = .34 (5.28)(6.2) = 11.13 cfs.

Flow @ Rundown is from C3 + C1 = 14.1 + 1.2 = 15.3

Flow in PIPE = UPLAND BASIN A + C2 + C4

= 29.7 + 4.8 + 1.5 = 36.0 cfs

BOHANNAN-HUSTON INC.

PROJECT NAME SYCAMORE SHEET 5 OF 20

PROJECT NO. 63322 BY CW DATE 9/96

SUBJECT ORIG CH'D DATE

BASIN C - SITE DEVELOPMENT AREA

TOTAL ACREA = 6.2 ACRES

SUB-BASIN DESCRIPTIONS

MARK	% IMP	% LANDSCAPE	Aggregate C-Factor	I	A	Q 100 YR
C-1	39%	61%	.59	5.28	.38	1.2
C-2	73%	27%	.81	5.28	1.29	5.5
C-3	46%	54%	.63	5.28	4.25	14.1
C-4	100%	0%	.98	5.28	.28	1.4
					6.20	22.2

Time of Concentrations all less than 10 minutes

I = 2.4 x Modif factor = 2.4 x 2.2 = 5.28 in/hr.

C factor Landscape = .34

C factor Parking, roofs, = .98

For C-1 C = .39(.98) + .61(.34) = .59

& C-2, C-3, C-4 etc.

Undeveloped Flow

Approx Q = CIA = .34 (5.28)(6.2) = 11.13 cfs.

FLOW @ Rundown is from C3 + C1 = 14.1 + 1.2 = 15.3

FLOW in PIPE = UPLAND BASIN A + C2 + C4
= 29.7 + 4.8 + 1.5 = 36.0 cfs

BOHANNAN-HUSTON INC.

PROJECT NAME SYCAMORE SHEET 5 OF 20

PROJECT NO. 63322 BY LW DATE 9/06

SUBJECT ORIG CH'D DATE

Rundown Flow = 15.3 cfs.
Depth ≈ .38 feet.
Velocity ≈ 3.1 ft/sec.

Undeveloped Flow.
T_c Basin A = 30.3 min
I = 2.4 × 1.21 = 2.90 in/hr

Area = 30.1 + 29.0 + 6.3 = 65.4 ACRES.
C = .34.
Q = CIA = .34(2.9) 65.4 = 64.5 cfs 100 yr
Q_{10yr} = .657(64.5) = 43.4 cfs DPM 22.2D-1

BOHANNAN-HUSTON INC.

PROJECT NAME SYCAMORE SHEET 6 OF 20
PROJECT NO. 63322 BY GW DATE 9/86
SUBJECT DRNG CH'D DATE

STORM DRAIN - SECTIONS, INLET & OUTFALL

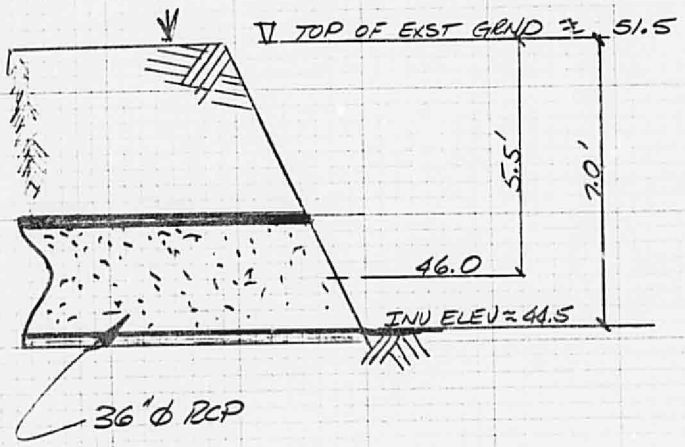

INLET SECTION

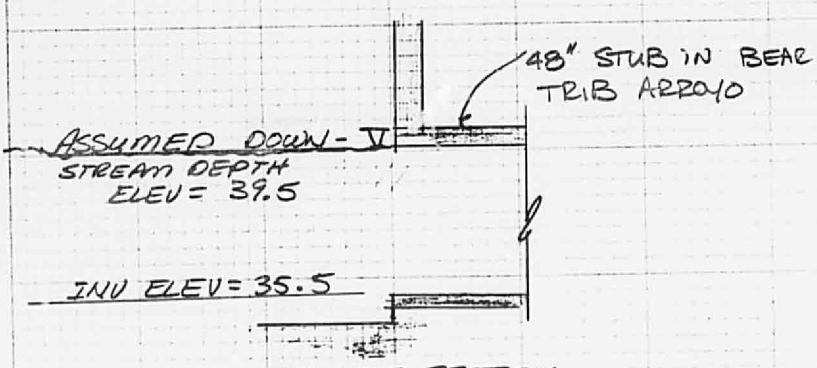

OUTLET SECTION

BOHANNAN-HUSTON INC.

PROJECT NAME	SYCAMORE	SHEET	7	OF	20
PROJECT NO.	63322	BY	GW	DATE	1/87
SUBJECT	PIPE	CH'D	✓	DATE	1/87

DESIGN OF RCP STORM DRAIN

UNDEVELOPED FLOW INTO PIPE = 29.7 CFS

DEVELOPED FLOW FROM BASIN A = 55.9 CFS.

CONSERVATIVELY, OVERSIZE PIPE

UPLAND — SITE DRNG

$Q_{DES} = 55.9 + 22.2 = 78.1$ CFS

OVERSIZE RCP FOR GREATER FLEXIBILITY IN THE UPSTREAM DRAINAGE SOLUTIONS IN THE FUTURE.

INLET DESIGN.

USING THE ORIFICE EQUATION FROM DPM SECT 22.3 PAGE 24

$Q = CA\sqrt{2gh}$

C = COEFF = .63

A = AREA = .707 ft^2

g = 32.2 ft/sec^2

h = DEPTH OF WATER FROM ℄

$Q = CA\sqrt{2gh} = (.63)(.707)\sqrt{2(32.2)(5.5)} = 84$ CFS

INLET CAPACITY = 84.0 CFS > 55.9

CAPACITY OF 36"Ø PIPE FLOWING FULL IS $Q = KS^{1/2} = 666.9\sqrt{.0238} = 103$ CFS

APPROX SLOPE OF HGL

SEE SKETCH, SHEET --

BOHANNAN-HUSTON INC.

PROJECT NAME	SYCAMORE	SHEET 8	OF 20
PROJECT NO.	63322	BY GW	DATE 1/87
SUBJECT	RCP DRAIN	CHK	DATE

THIS CAPACITY 103 CFS EXCEEDS GREATLY.
THE FLOW IN THE PIPE FROM UPSTREAM
PLUS SOME FUTURE CAPACITY (IF REQD) FOR
THIS TRACT. ADDITIONAL FLOW FROM INLETS
AT BASINS C2 AND C4. 5.5 + 1.4 = 6.9
Velocity OF WATER IN PIPE: (CONSERVATIVELY)

$V = \frac{Q}{A} = \frac{103}{7.07} = 14.6$ ft/SEC $\quad \frac{V^2}{2g} = \frac{14.6}{2(32.2)} = 3.3'$ +

DOWNSTREAM FLOW IS TOTAL OF UP AND 55.9+6.9 = 62.8
AND BASINS C3 & C 15.3+62.8 = 78.1 CFS << 103
CONTROL. $V = \frac{Q}{A} = \frac{103}{12.56} = 8.2$ FT/SEC. * (SEE NOTE BELOW)

$\frac{V^2}{2g} = \frac{8.2^2}{2(32.2)} = 1.06$

LOSSES @ 45° BENDS IN 48"Ø PIPE

$K_b = .2\sqrt{\frac{\Delta}{90}} = .20\sqrt{\frac{45}{90}} = .141$

$h_f = K_b \frac{V^2}{2g} = (.141)\frac{8.2^2}{2(32.2)} = .15'$

1 BEND IN 36"Ø PIPE

CONSERVATIVELY ESTIMATE OTHER LOSS
BASED ON VELOCITY HEAD OF 36"Ø

$h_f = (.141)\frac{14.6^2}{2(32.2)} = .47'$

Total Bend Losses .15' + .47' = .62'

*NOTE: THE PIPE FULL CAPACITY IS USED, RATHER THAN THE ACTUAL FLOW, TO ENABLE FULL USE OF THE SYSTEM AT A LATER DATE.

BOHANNAN-HUSTON INC.

PROJECT NAME	SYCAMORE	SHEET	9	OF	20
PROJECT NO.	63322	BY	GW	DATE	1/87
SUBJECT	PIPE DES	CH'D		DATE	

CHECK PIPE STARTING DOWNSTREAM END

SEE SHEET _____ FOR PROFILES.

MAXIMUM FLOW IN 48" RCP PIPE BE 55.9 CFS FROM UPSTREAM PLUS 22.2 CFS FROM ON SITE. THIS IS CONSERVATIVE FOR EVEN THE FUTURE CASE. TOTAL = 78.1 << 103 (CAPACITY)

CONSERVATIVELY ESTIMATE THE CAPACITY OF THE 48"Ø PIPE AS MANNINGS EQN, PIPE FLOWING AT CAPACITY (NOT ACTUAL) & Slope of Invert

$S = 1\% \pm$, $D = 48''$, $Q_{capacity} = 142.9$ CFS >> 78.1

THEN, ASSUME HGL AT TOP OF PIPE, AND CHECK FOR BEND LOSS EFFECTS

TOP OF PIPE ELEV = .01(20) + 39.5 = 39.7'

h_f @ 48"Ø = .141' ELEV = 39.7 + .14 = 39.84

APPROX SLOPE OF HGL = 1%

CAPACITY OF 48"Ø WITH S = .01 OR 1%

Q = 142.9 CFS.

NEXT HGL ELEV @ MANHOLE

ELEV = 39.84 + 60(.010) = 40.44

PLUS BEND LOSS OF .47'

ELEV AT BEND = 40.44 + .47 = 40.91

BOHANNAN-HUSTON INC.

PROJECT NAME SYCAMORE SHEET 10 OF 20

PROJECT NO. 63322 BY _____ DATE _____

SUBJECT PIPE DES CH'D _____ DATE _____

AVERAGE HGL SLOPE TO INLET

$S = \frac{51.5 - 40.91}{422} = .0251 = S.$

$Q = 666.9 \sqrt{.0251} = 105.7$ CFS. (PER DPM)

THIS IS MUCH GREATER THAN THE 55.9 CFS PROJECTED AND THE ADDITIONAL CAPACITY UP TO 78.1 CFS FOR THIS STRETCH OF STORM DRAIN.

STORM DRAIN - SUMMARY.

THE DRAIN, AS DESIGNED, HAS NOT ONLY THE ADEQUATE BUT ALSO ADDITIONAL CAPACITY FOR UPLAND DEVELOPED CONDITIONS. THE HGL CALCULATIONS, ASSUMING WATER IN THE DOWNSTREAM CHANNEL, STAY WELL BELOW FINISH GROUND SURFACE. DRAIN HAS ADEQUATE SLOPE TO ASSURE RELATIVE MAINTENANCE FREE OPERATION.

BOHANNAN-HUSTON INC.

PROJECT NAME SYCAMORE SHEET 11 OF 20
PROJECT NO. 63322 BY GW DATE 1/87
SUBJECT SUMMARY CH'D DATE

N=0.01300 INCREMENT= 1.00 SLP=0.00990

CULVERT RATING TABLE

48. INCH DIAMETER PIPE

FLOW DEPTH INCHES	FLOW AREA SQ. FT.	DISCHARGE CFS	VELOCITY FPS.
1.00000	0.06374	0.10486	1.64509
2.00000	0.17915	0.46477	2.59424
3.00000	0.32701	1.10420	3.37668
4.00000	0.50017	2.03206	4.06275
5.00000	0.69437	3.25093	4.68186
6.00000	0.90662	4.75965	5.24989
7.00000	1.13465	6.55451	5.77665
8.00000	1.37665	8.62992	6.26876
9.00000	1.63109	10.97876	6.73093
10.00000	1.89666	13.59275	7.16666
11.00000	2.17222	16.46251	7.57866
12.00000	2.45673	19.57781	7.96904
13.00000	2.74927	22.92761	8.33952
14.00000	3.04898	26.50014	8.69148
15.00000	3.35506	30.28299	9.02607
16.00000	3.66675	34.26311	9.34426
17.00000	3.98337	38.42693	9.64685
18.00000	4.30421	42.76026	9.93451
19.00000	4.62865	47.24843	10.20782
20.00000	4.95605	51.87622	10.46726
21.00000	5.28579	56.62792	10.71323
22.00000	5.61729	61.48730	10.94608
23.00000	5.94994	66.43761	11.16609
24.00000	6.28318	71.46154	11.37346
25.00000	6.61642	76.54131	11.56839
26.00000	6.94907	81.65849	11.75099
27.00000	7.28057	86.79412	11.92134
28.00000	7.61031	91.92849	12.07946
29.00000	7.93771	97.04131	12.22535
30.00000	8.26215	102.11143	12.35895
31.00000	8.58299	107.11691	12.48013
32.00000	8.89961	112.03476	12.58873
33.00000	9.21130	116.84093	12.68452
34.00000	9.51738	121.51014	12.76719
35.00000	9.81709	126.01553	12.83635
36.00000	10.10962	130.32838	12.89152
37.00000	10.39414	134.41776	12.93207
38.00000	10.66969	138.24997	12.95726
39.00000	10.93527	141.78755	12.96608
40.00000	11.18970	144.98828	12.95729
41.00000	11.43170	147.80322	12.92924
42.00000	11.65974	150.17381	12.87969
43.00000	11.87199	152.02666	12.80549
44.00000	12.06619	153.26398	12.70194
45.00000	12.23935	153.74278	12.56135
46.00000	12.38721	153.22118	12.36931
47.00000	12.50262	151.15808	12.09012
48.00000	12.56637	142.92317	11.37347

SYCAMORE
63322
FLOW DEPTHS

12/20

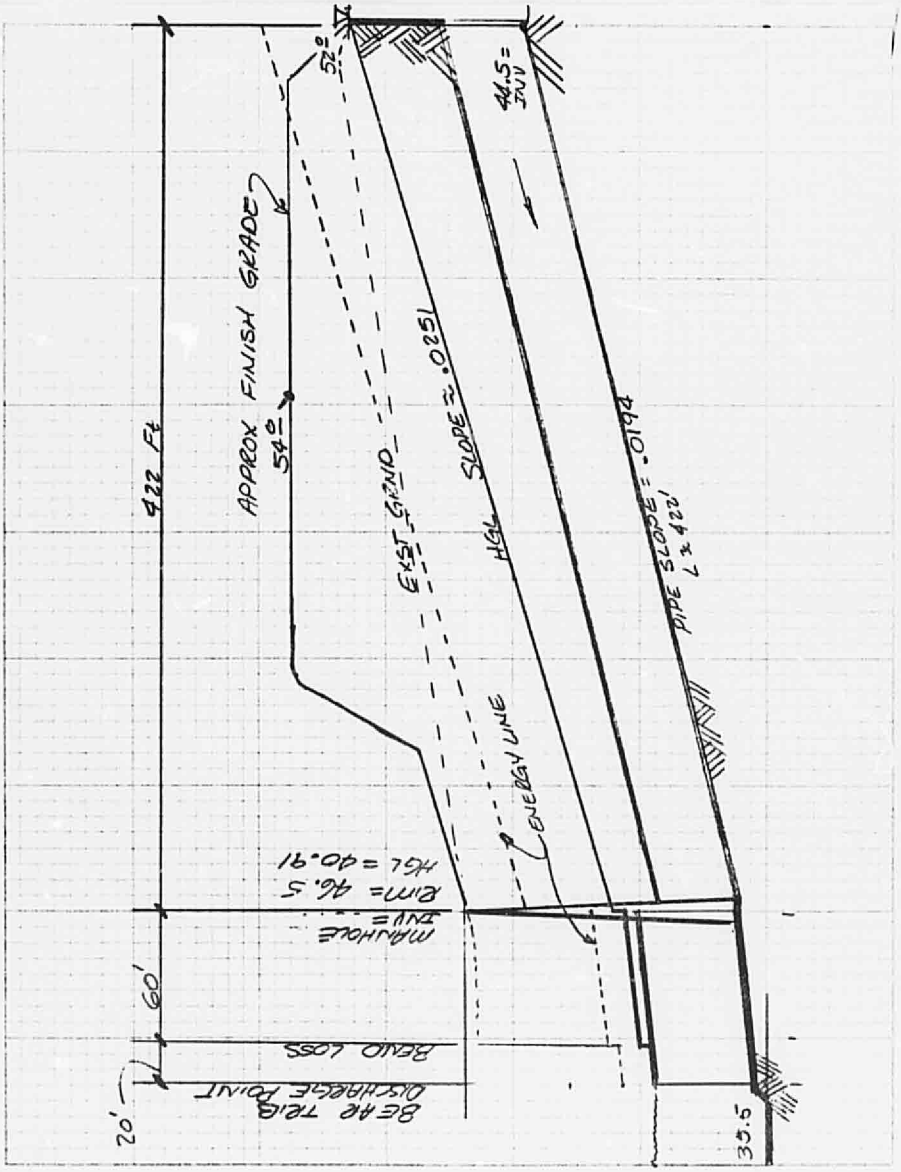

BOHANNAN-HUSTON INC.

PROJECT NAME SYCAMORE SHEET 13 OF 20
PROJECT NO. 63322 BY GW DATE 1/87
SUBJECT HGL-EGL-PIPE CH'D DATE

APPURTENCES.

THOUGH THE SITE HAS BEEN GRADED TO PROVIDE POSITIVE DRAINAGE OVERLAND, SOME SMALL 18" SQUARE INLETS AND ROOF DRAIN COLLECTORS WILL BE INSTALLED TO COLLECT "NUISANCE" FLOWS FROM LIGHT RAINS, LANDSCAPE IRRIGATION OVERSPRAY, ETC. THE DETAIL IS ATTACHED FOR THE INLET. THE COLLECTOR FOR THESE FLOWS IS PVC AND WILL BE PRIVATELY MAINTAINED. IN THE CASE OF PLUGGING OF THIS LINE, POSITIVE OVERLAND DRAINAGE WILL CARRY THE FLOWS.

ANALYSIS OF INLET @ ROAD C.

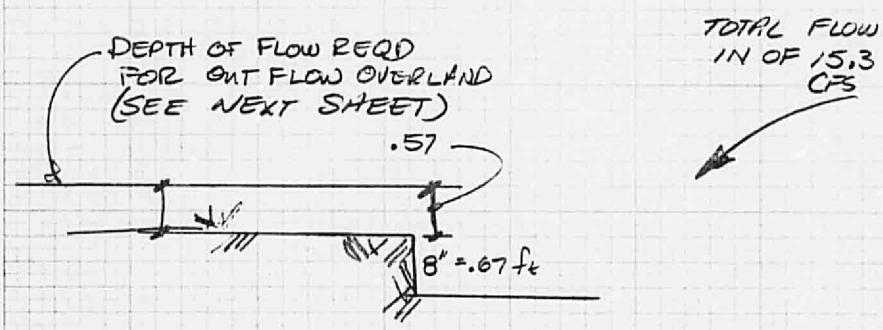

TOTAL DEPTH OVER INLET = .57+.67 = 1.24'

FROM DPM. PLATE 22.30-5 Q=18.0 CFS

∴ MAXIMUM FLOW INTO INLET = 18 CFS.

PROJECT NAME SYCAMORE SHEET 15 OF 20

PROJECT NO. 63322 BY GW DATE 1/87

SUBJECT INLET CAPACITY CH'D _____ DATE _____

SYCAMORE SW RUNDOWN

MANNINGS N=.0300 SLOPE =.0050

POINT	DIST	ELEV	POINT	DIST	ELEV	POINT	DIST	ELEV
1	0.00	2.00	3	20.00	0.00			
2	10.00	0.00	4	30.00	2.00			

WSEL FT.	DEPTH INC	FLOW AREA SQ.FT.	FLOW RATE (CFS)	WETTED PER (FT)	FLOW VEL (FPS)	TOPWID PLUS OBSTRUCTIONS
0.05	0.05	0.51	0.24	10.51	0.47	10.50
0.10	0.10	1.05	0.77	11.02	0.73	11.00
0.15	0.15	1.61	1.52	11.53	0.94	11.50
0.20	0.20	2.20	2.48	12.04	1.13	12.00
0.25	0.25	2.81	3.63	12.55	1.29	12.50
0.30	0.30	3.45	4.98	13.06	1.44	13.00
0.35	0.35	4.11	6.50	13.57	1.58	13.50
0.40	0.40	4.80	8.20	14.08	1.71	14.00
0.45	0.45	5.51	10.09	14.59	1.83	14.50
0.50	0.50	6.25	12.16	15.10	1.95	15.00
0.55	0.55	7.01	14.41	15.61	2.05	15.50
0.60	0.60	7.80	16.84	16.12	2.16	16.00
0.65	0.65	8.61	19.45	16.63	2.26	16.50
0.70	0.70	9.45	22.26	17.14	2.36	17.00
0.75	0.75	10.31	25.25	17.65	2.45	17.50
0.80	0.80	11.20	28.42	18.16	2.54	18.00
0.85	0.85	12.11	31.80	18.67	2.63	18.50
0.90	0.90	13.05	35.36	19.18	2.71	19.00
0.95	0.95	14.01	39.12	19.69	2.79	19.50
1.00	1.00	15.00	43.09	20.20	2.87	20.00
1.05	1.05	16.01	47.25	20.71	2.95	20.50
1.10	1.10	17.05	51.62	21.22	3.03	21.00
1.15	1.15	18.11	56.19	21.73	3.10	21.50
1.20	1.20	19.20	60.98	22.24	3.18	22.00
1.25	1.25	20.31	65.97	22.75	3.25	22.50
1.30	1.30	21.45	71.18	23.26	3.32	23.00
1.35	1.35	22.61	76.61	23.77	3.39	23.50
1.40	1.40	23.80	82.26	24.28	3.46	24.00
1.45	1.45	25.01	88.14	24.79	3.52	24.50
1.50	1.50	26.25	94.24	25.30	3.59	25.00
1.55	1.55	27.51	100.56	25.81	3.66	25.50
1.60	1.60	28.80	107.12	26.32	3.72	26.00
1.65	1.65	30.11	113.92	26.83	3.78	26.50
1.70	1.70	31.45	120.94	27.34	3.85	27.00
1.75	1.75	32.81	128.21	27.85	3.91	27.50
1.80	1.80	34.20	135.72	28.36	3.97	28.00
1.85	1.85	35.61	143.48	28.87	4.03	28.50
1.90	1.90	37.05	151.48	29.38	4.09	29.00
1.95	1.95	38.51	159.74	29.89	4.15	29.50
2.00	2.00	40.00	168.24	30.40	4.21	30.00

@ 15.3 CFS DEPTH ≈ .57 ft

1296