HYDROLOGY E21/D28C AMERIWEST OFFICE PARK PHASE I

E21/D28C

AMERIWEST
OFFICE PARK
PHASE I

1 PLAN

BOHANNAN-HUSTON INC.
4125 Carlisle Blvd NE Albuquerque NM 87107
(505) 881-2000

Transmittal

To: City Hydrology

- ☐ Parcel post
- ☐ Messenger
- ☐ First Class
- ☐ UPS
- ☐ Express Mail
- ☐ Air Freight
- ☐ Bus
- ☐ _____

Attention: Billy Goolsby

Date: 8/9/85

Our job number: 51822

Your job number:

Job: AmeriWest Office Park (E21-D28C) Phase 1

We are enclosing:	For:
Response to Comments	

Comments:

RECEIVED
AUG 09 1985
HYDROLOGY SECTION

By: Susan B. Burrell

thank you

Rec'd by: M. R. Kong

Date: 8-9-85

☐ Please Return Signed Yellow Copy

1/23/85

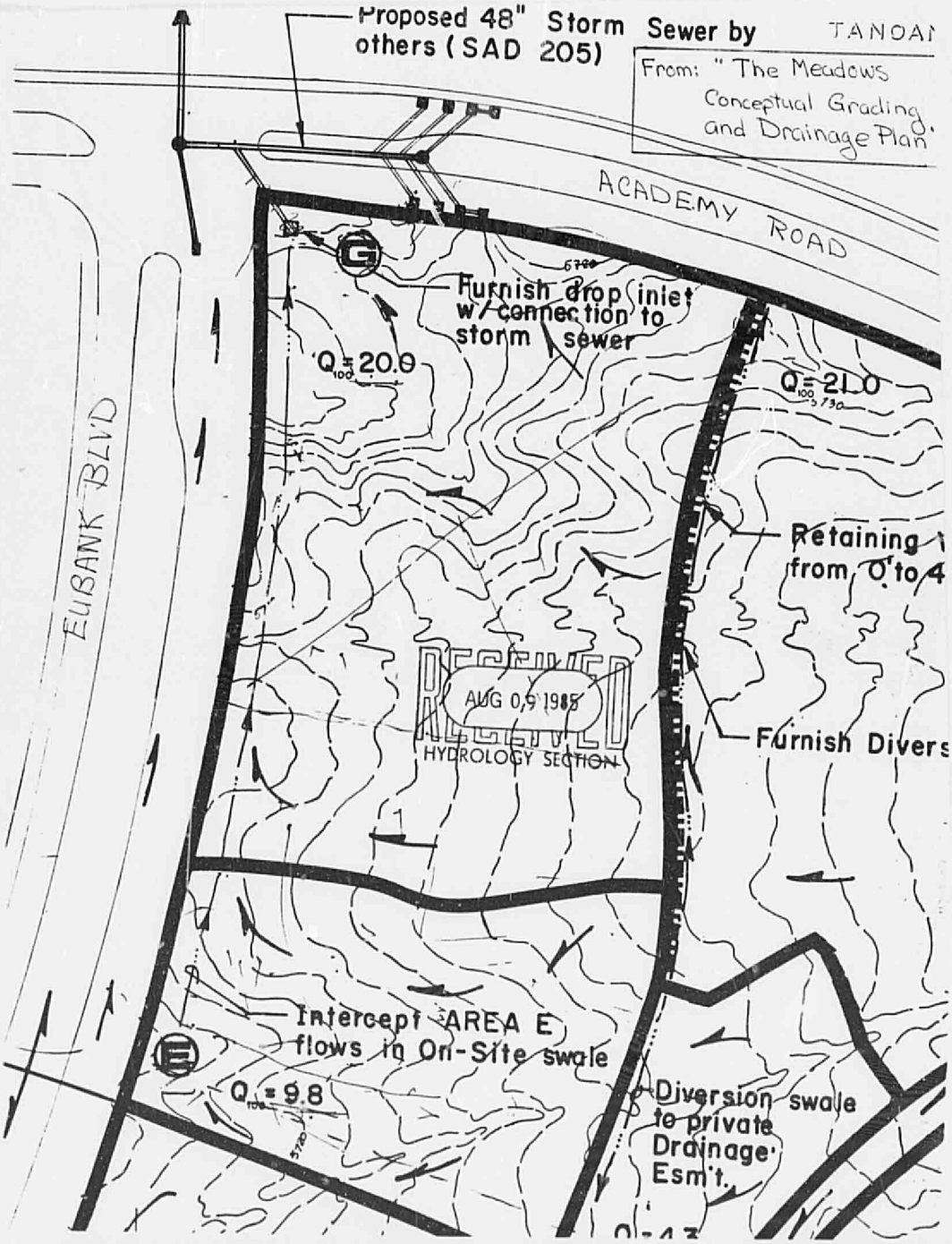
Proposed 48" Storm Sewer by TANOAN
others (SAD 205)
From: "The Meadows Conceptual Grading and Drainage Plan"
ACADEMY ROAD
EUBANK BLVD
G
Furnish drop inlet w/ connection to storm sewer
Q100 = 20.0
Q100 = 21.0
Retaining
from 0' to 4
RECEIVED
AUG 09 1985
HYDROLOGY SECTION
Furnish Divers
Intercept AREA E flows in On-Site swale
E
Q100 = 9.8
Diversion swale to private Drainage Esm't.

AmeriWest Office Park, Phase II Hydrologic Analysis

Tc = 10 minutes

100-year intensity = 5.77 in/hr

10-year intensity = 3.79 in/hr

Runoff coefficient = 0.7

Drainage Area = 3.18 Acres

$Q = iCA = (5.77)(0.7)(3.18)$

$Q = 12.84$ cfs

Subtract Q for Drainage Basin B, that was included as part of Phase II

$Q = 8.98$ cfs

Q_{TOTAL} (Phases I & II) = 25.81

RECEIVED
AUG 09 1985
HYDROLOGY SECTION

PROJECT NAME AmeriWest Office Park SHEET 1 OF 1
PROJECT NO. 51825 BY KLB DATE 8/85
SUBJECT Storm Drain / Runoff Calcs CH'D DATE

From DPM, 22.3 pages 77 & 78

$$Q = \frac{A\sqrt{2gH}}{\sqrt{1.2 + \frac{0.021L}{D^{1.2}}}}$$

Given: $H = 10.2$ ft

$L = 181.0$ ft

$$\text{"}V\text{"} = 1.33 + 1.2\left[\frac{(Q/A)^2}{2g}\right] + d$$

Where "V" = catch basin depth

For: D = 15"

$A = 1.23\ ft^2$

$Q = 15.54$ cfs

$V = 5.56$ ft $\therefore S = 0.0505$

For: D = 18"

$A = 1.77\ ft^2$

$Q = 24.11$ cfs

$V = 6.29$ ft $\therefore S = 0.0465$

PROJECT NAME AmeriWest Office Park SHEET 1 OF 1

PROJECT NO. 51825 BY KLS DATE 8/85

SUBJECT Storm Drain Design CH'D _____ DATE _____

BOHANNAN-HUSTON INC.

4125 CARLISLE BLVD. N.E. ALBUQUERQUE, NEW MEXICO 87107 505 881-2000
UNIVERSITY PLAZA, 330 GARFIELD SUITE 104 SANTA FE, N.M. 87509 505 988-7671
6713 VISCOUNT BLVD. EL PASO, TEXAS 79925 915 778-4491

August 8, 1985

RECEIVED
AUG 09 1985
HYDROLOGY SECTION

Mr. Billy Goolsby
Hydrology Section
City of Albuquerque
Post Office Box 1293
Albuquerque, NM 87103

Re: Final Grading Plan for AmeriWest Office Park, Phase 1 (E21-D28C)

Dear Billy:

Submitted herewith is the final grading plan for AmeriWest Office Park, Phase I, for your approval. AmeriWest Office Park is a 4 phase commercial development within "The Meadows" development plan area.

The "Meadows Conceptual Grading and Drainage Plan" calls for flows from Phases I and II to drain to the north and into the Academy Road storm sewer by means of a direct connection from the site to the storm sewer in the intersection. This approach is not realistic since construction of the concrete intersection has now been completed under SAD 205. Our recommendation in the preliminary grading plan to convey runoff from the site to a catch basin in Academy Road via an on-site RCP has been previously approved. This system will collect runoff from Phase II as well. The runoff calculations for Phases I and II have been revised from the original 29.8 cfs in the master plan to 25.8 cfs based upon accurate values of the percent pervious on-site. These calculations are enclosed along with calculations illustrating that 18" diameter pipe will carry the runoff from both phases.

As discussed in our meeting of August 7, 1985 with yourself and Sergio Miranda, the connections to the inlet in Academy Road will be built under a "Construction of Private Storm Drainage Within Public Right-of- Way Document". We later met with Sergio and Greg Olson to discuss the feasibility of an 18" diameter connection pipe. The use of 18" pipe was agreed upon, provided that the inlet wall penetration and rebar tie-in were detailed and specified. This document has been submitted to the Design Section for approval and a preliminary copy is enclosed for your reference.

PRINCIPALS
JERRY R. BOHANNAN, P.E. & L.S.
LARRY W. HUSTON
MICHIAL M. EMERY, P.E.

Should you have any questions, please do not hesitate to call Karen Scharf or me at 881-2000.

Truly yours,

Brian G. Burnett

Brian G. Burnett, P.E.
Vice President

Enclosure

cc: Mr. Terry Tengler
Mr. David Murphy
Mr. Herb Denish
Mr. Sergio Miranda

KS/mls
Job No. 5 182 5

DRAINAGE INFORMATION SHEET

PROJECT TITLE: AmeriWest office Park Phase 1 (E21-D28C) ZONE ATLAS/DRNG. FILE #: E21-D28C

LEGAL DESCRIPTION: Tract A-1-1 Meadows Subdivision

CITY ADDRESS:

ENGINEERING FIRM: Bohannan-Huston, CONTACT: Brian Burnett

ADDRESS: 4425 Carlisle, NE PHONE: 881-2000

OWNER: David Murphy CONTACT: David Murphy

ADDRESS: 17314 HWY 149 Suite 330 Houston, Texas 77064 PHONE: 713-890-4401

ARCHITECT: Terry Tengler & Assoc. CONTACT: Terry Tengler

ADDRESS: 15531 Kuykendahl Suite 220 Houston, Texas 77090 PHONE: 713-440-9448

SURVEYOR: CONTACT:

ADDRESS: PHONE:

CONTRACTOR: CONTACT:

ADDRESS: PHONE:

RECEIVED AUG 09 1985 HYDROLOGY SECTION

PRE-DESIGN MEETING:

___ YES

___ NO

___ COPY OF CONFERENCE RECAP SHEET PROVIDED

DRB NO. ___

EPC NO. ___

PROJ. NO. ___

TYPE OF SUBMITTAL:

___ DRAINAGE REPORT

___ DRAINAGE PLAN

___ CONCEPTUAL GRADING & DRAINAGE PLAN

X GRADING PLAN

___ EROSION CONTROL PLAN

___ ENGINEER'S CERTIFICATION

CHECK TYPE OF APPROVAL SOUGHT:

___ SKETCH PLAT APPROVAL

___ PRELIMINARY PLAT APPROVAL

___ SITE DEVELOPMENT PLAN APPROVAL

___ FINAL PLAT APPROVAL

X BUILDING PERMIT APPROVAL

___ FOUNDATION PERMIT APPROVAL

___ CERTIFICATE OF OCCUPANCY APPROVAL

___ ROUGH GRADING PERMIT APPROVAL

___ GRADING/PAVING PERMIT APPROVAL

___ OTHER ___ (SPECIFY)

DATE SUBMITTED: 8/9/85

BY: Brian Burnett

City of Albuquerque
P.O. BOX 1293 ALBUQUERQUE, NEW MEXICO 87103

DESIGN HYDROLOGY SECTION
123 Central NW, Albuquerque, NM 87102
(505) 766-7644

September 5, 1985

Mr. Brian Burnett
Bohannan-Huston, Inc.
4125 Carlisle NE
Albuquerque, NM 87107

RE: DRAINAGE PLAN FOR AMERIWEST OFFICE PARK - PHASE 1 (E21-D20C)
RECEIVED AUGUST 9, 1985. (6500 Eubank NE)

Dear Brian:

The above referenced plan, dated July 31, 1985, is approved for building permit.

Please attach a copy of this approved plan, along with the appropriately approved "Private Drainage Facilities Within City Right-of-Way/Easement" document, to the construction sets for Hydrology sign-off.

Should you have any questions or comments, please call 766-7644.

Cordially,

Billy J. Goolsby

Billy J. Goolsby
C.E./Design Hydrology

BJG/cl

cc: Greg Olson

BOHANNAN-HUSTON INC.

DRAINAGE INFORMATION SHEET

PROJECT TITLE: AmeriWest Office Park, Phase 1 ZONE ATLAS/DRNG.# E-21-Z/D28C

LEGAL DESCRIPTION: Southeast corner of Academy Road and Eubank Boulevard, Section 28

CITY ADDRESS: None

ENGINEERING FIRM: Bohannan-Huston, Inc. CONTACT: Brian Burnett

ADDRESS: 4125 Carlisle N.E. Albuq. NM 87107 PHONE: 881-2000

OWNER: David R. Murphy-Mark Geller Interests CONTACT: Same

ADDRESS: 17314 Hwy. 149, Houston, TX 77064 PHONE: 713/890-4401

ARCHITECT: Terry Tengler CONTACT: Same

ADDRESS: 15531 Kuykendahl, Houston, TX 77090 PHONE: 713/440-9448

SURVEYOR: _____ CONTACT: _____

ADDRESS: _____ PHONE: _____

CONTRACTOR: _____ CONTACT: _____

ADDRESS: _____ PHONE: _____

RECEIVED JUN 06 1985 HYDROLOGY SECTION

PRE-DESIGN MEETING:

x YES (phone conversation between Brian Burnett and Fred Aguirre)
___ NO
___ COPY OF CONFERENCE RECAP SHEET PROVIDED

DRB NO. 85-348 5/28/85
EPC NO. 2-80-149-2 9/20/84
PROJ. NO. _____

TYPE OF SUBMITTAL:

___ DRAINAGE REPORT ADDENDUM
x DRAINAGE PLAN
___ CONCEPTUAL GRADE & DRAIN PLAN
___ GRADING PLAN
___ EROSION CONTROL PLAN
___ ENGINEER'S CERTIFICATION
___ DRAINAGE MANAGEMENT PLAN

CHECK TYPE OF APPROVAL SOUGHT:

___ SKETCH PLAT APPROVAL
___ PRELIMINARY PLAT APPROVAL
x SITE DEVELOPMENT PLAN APPROVAL
___ FINAL PLAT APPROVAL
___ BUILDING PERMIT APPROVAL
___ FOUNDATION PRMIT APPROVAL
___ CERTIFICATE OF OCCUPANCY APPROVAL
___ ROUGH GRADING PERMIT APPROVAL
___ GRADING/PAVING PERMIT APPROVAL
___ OTHER _____ (SPECIFY)

DATE SUBMITTED: 6 June 1985

BY: K Schaef

BOHANNAN-HUSTON INC.
4125 CARLISLE BLVD. N.E. ALBUQUERQUE, NEW MEXICO 87107 505 881-2000
UNIVERSITY PLAZA, 330 GARFIELD SUITE 104 SANTA FE, N.M. 87509 505 988-7671
6713 VISCOUNT BLVD. EL PASO, TEXAS 79925 915 778-4491

RECEIVED
JUN 06 1985
HYDROLOGY SECTION

June 4, 1985

Mr. Fred Aguirre
City Hydrology Section
City of Albuquerque
P.O. Box 1293
Albuquerque, NM 87103

Re: Drainage Submittal for AmeriWest Office Park, Phase 1

Dear Fred:

Enclosed please find a copy of the Drainage and Grading Plan for AmeriWest Office Park, Phase I. AmeriWest Office Park is a 4 phase commerical development within "The Meadows" development plan area. Runoff for this phase is to be directed to the storm sewer system in the Academy Road-Eubank Boulevard intersection.

This plan will be heard at the July EPC meeting. We are therefore requesting approval in order that the site plan can be signed at DRB. A more detailed grading plan will be submitted prior to building permit signoff.

If you have any questions, please do not hesitate to call Karen Scharf or me at 881-2000.

Truly yours,

Brian G. Burnett

Brian G. Burnett, P.E.
Division Manager

Enclosure

cc: Mr. David Murphy
Mr. Terry Tengler
Mr. Herb Denish

KS/mls
Job No. 5 182 2

PRINCIPALS
JERRY R. BOHANNAN, P.E. & L.S.
LARRY W. HUSTON
MICHIAL M. EMERY, P.E.

DRAINAGE REPORT
FOR
AMERIWEST OFFICE PARK

RECEIVED
JUN 06 1985
HYDROLOGY SECTION

CITY OF ALBUQUERQUE

DRAINAGE FACILITIES WITHIN CITY RIGHT-OF-WAY

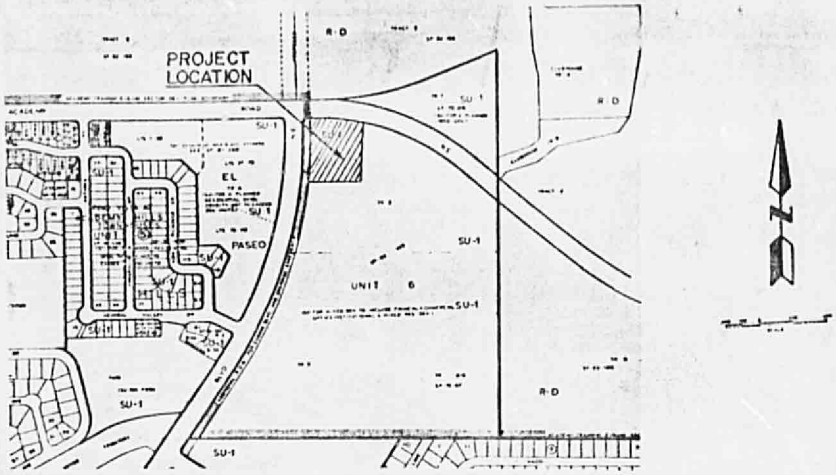

Legal Description:

Tract A-1-1, The Meadows
Project Section 28,
Township 11 North, Range 4 East,
New Mexico Principal Meridian

Bench Mark Info:

The station is a standard ASC brass tablet stamped "3-E21-A" set in a concrete post 0.3 ft. above the ground. Located ± 0.4 miles northeast of the Academy Rd./Eubank Blvd. intersection. Elevation 5765.23

Brian Burnett
8-6-85

NOTICE TO CONTRACTOR

1. An excavation/construction permit will be required before beginning any work within City right-of-way. An approved copy of these plans must be submitted at the time of application for this permit.

2. All work detailed on these plans to be performed, except as otherwise stated or provided hereon, shall be constructed in accordance with "Interim Standard Specifications Public Works Construction, 1985"

3. Two working days prior to any excavation, contractor must contact Line Locating Service, 765-1234, for location of existing utilities.

4. Prior to construction, the contractor shall excavate and verify the horizontal and vertical locations of all obstructions. Should a conflict exist, the contractor shall notify the engineer so that the conflict can be resolved with a minimum amount of delay.

5. Backfill compaction shall be according to ARTERIAL street use.

SUNDANCE MECH. E21-D28 E-95

APPROVALS	NAME	DATE	TITLE: AMERIWEST OFFICE PARK 10,400 ACADEMY ROAD N.E. STORM DRAIN INLET, LATERAL AND CONNECTION DETAILS	
A.C.E./DESIGN		08/23/85		
INSPECTOR	L. R.		PERMIT NO. 25523	MAP
A.C.E./CONSTRUCTION			SHEET 1 OF 3	E-21

CITY OF ALBUQUERQUE

DRAINAGE FACILITIES WITHIN CITY RIGHT-OF-WAY

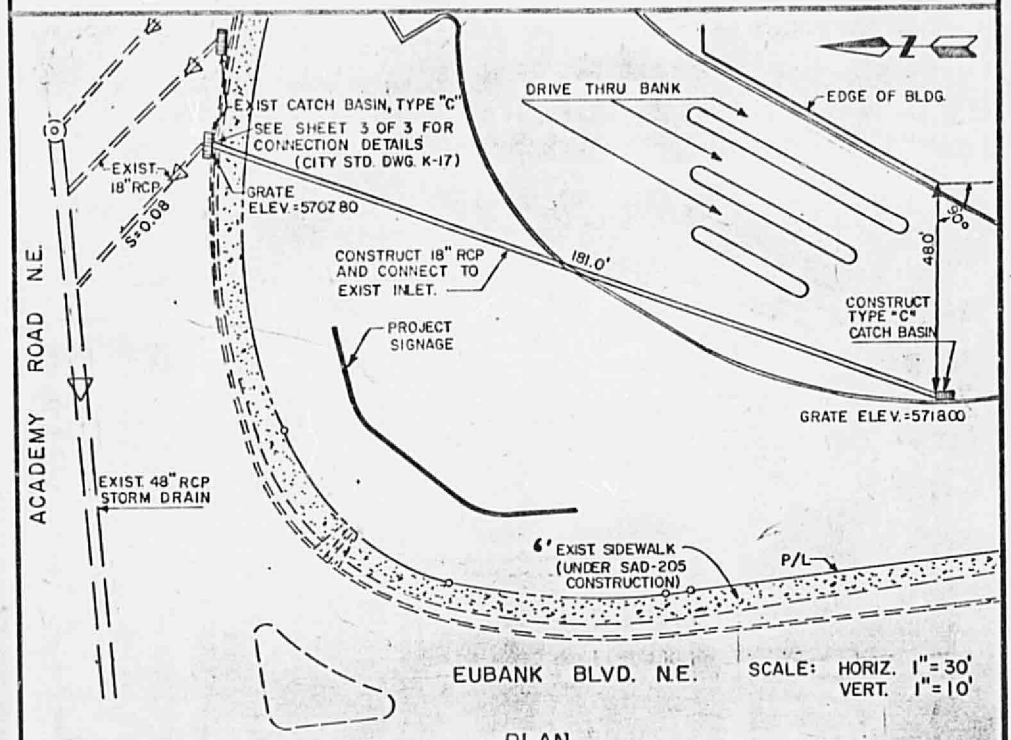

PLAN

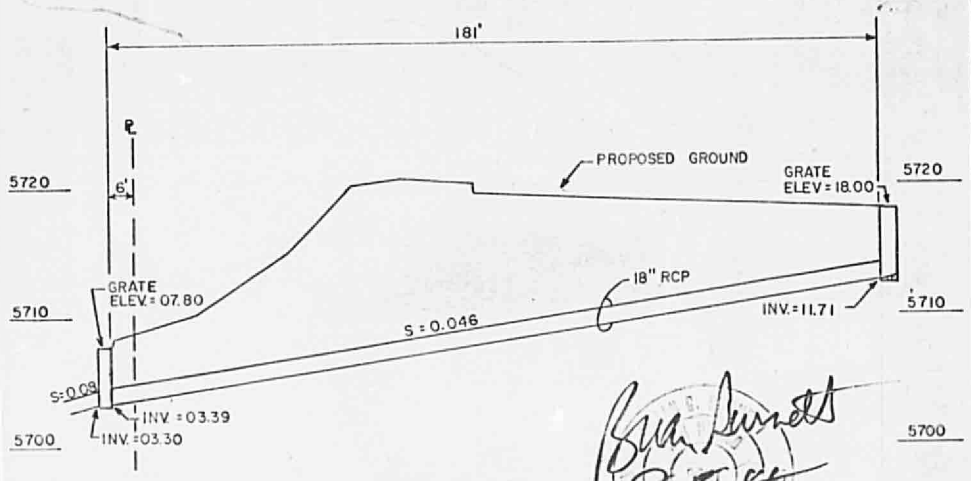

PROFILE

Bryan Burnett 8-5-85

E-45

SUNDANCE MECH

APPROVALS	NAME	DATE	TITLE: AMERIWEST OFFICE PARK 10,400 ACADEMY ROAD N.E. STORM DRAIN INLET, LATERAL AND CONNECTION DETAILS	
A.C.E./DESIGN		08/23/85		
INSPECTOR			PERMIT NO. 25523	MAP NO. E-21
			SHEET 2 OF 3	

CITY OF ALBUQUERQUE

DRAINAGE FACILITIES WITHIN CITY RIGHT-OF-WAY

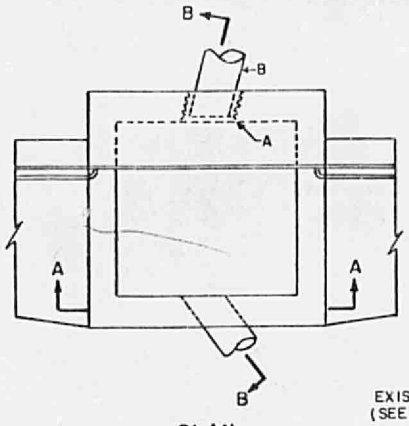

PLAN
NO SCALE

GENERAL NOTES:

1. THE CITY DOES NOT ACCEPT RESPONSIBILITY FOR THE MAINTENANCE FOR ANY DRAIN LINES INSTALLED BY OR FOR PRIVATE PROPERTY OWNERS.

CONSTRUCTION NOTES:

A. REMOVE 2'-6" DIAMETER SECTION OF INLET WALL. LEAVE 4" REBAR EXPOSED. GROUT WITH NON-SHRINK, NON-METALLIC GROUT.
B. NEW DRAIN LINE TO BE REINFORCED CONCRETE PIPE. DRAIN SIZE TO BE 18" DIAMETER.
C. EXISTING CONCRETE FILL.
D. FOR FRAME AND GRATE, SEE THE "CITY OF ALBUQUERQUE INTERIM STANDARD SPECIFICATIONS PUBLIC WORKS CONSTRUCTION", DWG. K-8, K-9 AND K-10.

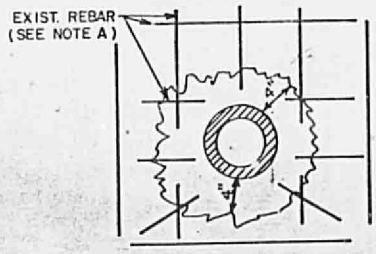

DETAIL A
NO SCALE

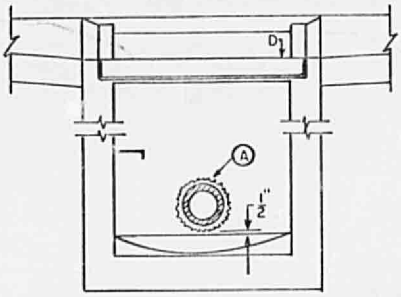

SECTION A-A
NO SCALE

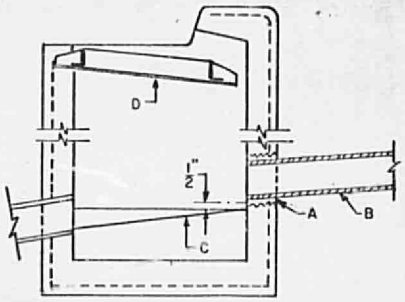

SECTION B-B
NO SCALE

E-9T

SUNDANCE MECH.

APPROVALS	NAME	DATE	TITLE: AMERIWEST OFFICE PARK 10,400 ACADEMY ROAD N.E. STORM DRAIN INLET, LATERAL AND CONNECTION DETAILS	
A.C.E./DESIGN		08/23/85		
INSPECTOR	L.R.		PERMIT NO 25523	MAP
A.C.E./HYDROLOGY			SHEET 3 OF 3	NO. E-21