HYDROLOGY F14/D17 POWDRELL'S RESTAURANT

F14 / D17

POWDRELL'S
RESTAURANT

1 PLAN

INFORMATION SHEET

PROJECT TITLE Powdrell's Restaurant TYPE OF SUBMITTAL Drainage Plan

ZONE ATLAS PAGE NO. F-14 CITY ADDRESS 5209 Fourth St. NW

LEGAL DESCRIPTION Lot 1, Block 2, Douglas Macarthur Addition

ENGINEERING FIRM Isaacson & Arfman CONTACT Tom Isaacson

ADDRESS 128 Monroe NE PHONE 268-8828

OWNER Drell's Inc. CONTACT Joe Powdrell

ADDRESS 5501 Montgomery NE PHONE 883-1792

ARCHITECT Van H. Gilbert Architect CONTACT Jim Graf

ADDRESS 319 Central NW Suite 201 PHONE 247-9955

SURVEYOR Isaacson & Arfman CONTACT Tom Isaacson

ADDRESS 128 Monroe NE PHONE 268-8828

CONTRACTOR _____ CONTACT _____

ADDRESS _____ PHONE _____

DATE SUBMITTED _____

BY _____

Use this Information Sheet when submitting the following:

Drainage report or plan, conceptual grading and drainage plan, engineer's certification plan, erosion plan and grading plan. Provide the information applicable to your submittal.

DEC 28 1988

City of Albuquerque
P.O. BOX 1293 ALBUQUERQUE, NEW MEXICO 87103

FILE COPY

January 12, 1984

Mr. Thomas O. Isaacson, P.E.
Iasaacson & Arfman
128 Monroe NE
Albuquerque, New Mexico 87

RE: POWDRELL'S RESTAURANT DRAINAGE PLAN (F14-D17)

Dear Mr. Isaacson:

These are my comments on the plan as submitted 12/28/83:

1. It is not clear from the plan what is existing and proposed. Call this out and include a legend on the plan.

2. Show roof drainage.

3. In my opinion the drop inlet would be less likely to settle under wheel loads if the 18" RCP had a foundation under it.

4. Show emergency spillway calculations. Where does the water go if the drain is clogged?

5. Is the T.B.M. marked in the field? It should be marked and called out on the plan as such.

6. The plan calls for an 8" drain line but the detail shows a 6" line.

7. Need a curb detail.

8. Show how the south portion of the lot is to drain.

9. Show existing and proposed grades at the property lines as well as grades and improvements within 25 feet of the property lines that show no offsite flows blocked and no adjacent improvements damaged by the proposed scheme.

10. In future submittals, please include zip codes on the information sheet and by whom submitted.

If you have any questions, please feel free to call me at 766-7644.

Thank you,

John Armstrong
Civil Engineer/Hydrology

JA:mrk

cc: Jim Graf, Van H. Gilbert Architect, 319 Central, Suite 201

Isaacson &
Arfman, P.A.

Consulting Engineering
Associates

January 17, 1984

RECEIVED
JAN 18 1984
HYDROLOGY SECTION

Mr. John Armstrong
Civil Engineer/Hydrology
City of Albuquerque
P.O. Box 1293
Albuquerque, N.M. 87103

RE: Powdrell's Restaurant Drainage Plan (F14-D17)

Dear Mr. Armstrong:

In response to your letter of January 12, 1984 regarding the drainage plan submitted on 12/28/83, we make the following comments.

1. "It is not clear from the plan what is existing and proposed. Call this out and include a legend on the plan." This has been done on the revised plan.
2. "Show roof drainage." This has been done.
3. "In my opinion, the drop inlet would be less likely to settle under wheel loads if the 18" 'RCP' had a foundation under it." This has been done.
4. "Show emergency spillway calculations. Where does the water go if the drain is clogged?" We have calculated the storage capacity of the parking lot and find that it exceeds the 100 year, 6 hour run-off volume. Therefore, the parking lot will not overflow should the drain be clogged. If the drain is clogged, it will be the owner's responsibility to unclog it and drain the parking lot.
5. "Is the 'T.B.M.' mark in the field? It should be marked and called out on the plan as such." We have shown a new T.B.M. which is marked in the field.
6. "The plan calls for an 8" drain line but the detail shows a 6" line." We have corrected the line to be a 6" line.
7. "Need a curb detail." We have included a curb detail.
8. "Show how the south portion of the lot is to drain." The south portion of the lot is a self ponding area. There is no new construction in this area.
9. "Show existing and proposed grades at the property lines as well as grades and improvements within 25' of the property lines that show no off-site flows blocked and no adjacent improvements damaged by the proposed scheme." Existing grades are shown

128 Monroe, NE • Albuquerque, NM 87108 • (505) 268-8828

at the property lines and 25' beyond. (Please note that some grades are "level"). We are proposing no change to grades at the property lines therefore no proposed grades are shown. The east side of the proposed parking lot will be somewhat lower than the existing grade at the property line and consequently no flows will be blocked in this area.

10. "In the future, please include zip codes on the information and by whom submitted." This will be done.

Attached are calculations showing the parking lot volume calculations and a sketch showing the 0.1' contours in the parking lot.

I believe this should take care of all your comments regarding the plan; however, if you do have any further questions, please contact me.

Very truly yours,

Thomas O. Isaacson

Attachments

TOI/naf

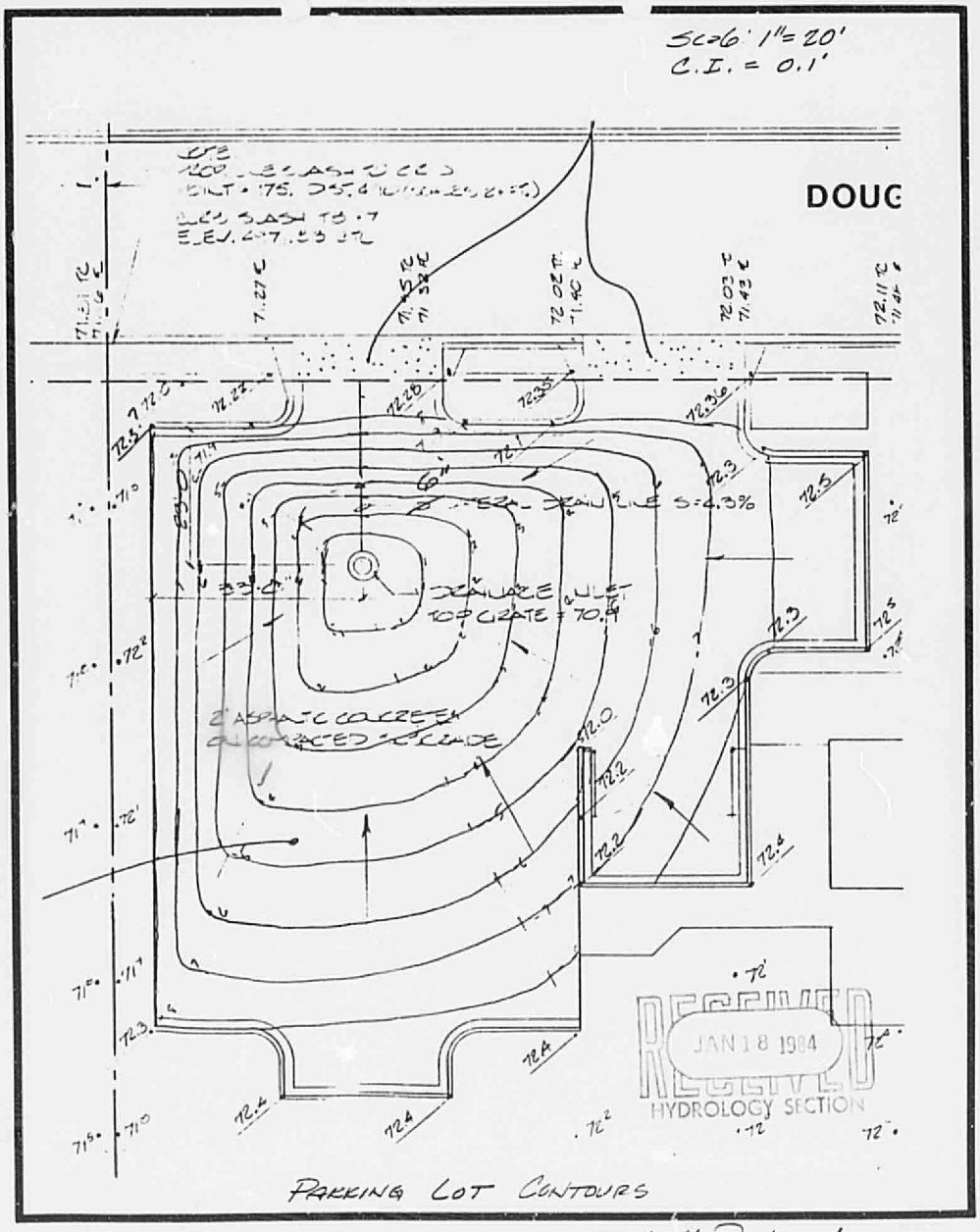

PARKING LOT CONTOURS

Isaacson & Arfman, P.A.

SUBJECT Powdrell's Restaurant JOB NO. ___

BY TDI DATE 1/16/84 SHEET NO. 1 OF 2

Parking Lot Volume Calculations

Isaacson & Arfman, P.A.

SUBJECT Paulmills Restaurant JOB NO.
BY TOI DATE 1/16/14 SHEET NO. 2 OF 2

Parking Lot VOLUME CALC's

ELEV	Area (SF)	AVG. AREA (SF)	VOLUME (CUFT)	ACCUM VOLUME (CU.FT.)
71.0	±0			
		105	10	
71.1	210			10
		435	44	
71.2	660			54
		1014	101	
71.3	1368			155
		1818	182	
71.4	2268			337
		2790	279	
71.5	3312			616
		4062	406	
71.6	4812			1022
		5556	556	
71.7	6300			1578
		7170	717	
71.8	8040			2295

Parking lot Spillway not req'd since storage volume (2295 cu.ft.) exceeds 100 year, 6 hour runoff volume (1670 cu.ft.)

City of Albuquerque
P.O. BOX 1293 ALBUQUERQUE, NEW MEXICO 87103

January 23, 1984

Mr. Thomas O. Isaacson, PE
Isaacson & Arfman, P.A.
128 Monroe NE
Albuquerque, NM 87108

REF: POWDRELL'S RESTAURANT DRAINAGE PLAN (F14-D17)

Dear Mr. Isaacson:

These are my comments on the above mentioned plan as revised January 17, 1984:

1. Emergency spillway calculations still need to be shown or hydraulic grade line calculations on the City storm drain. If water backs up through the inlet, it appears that it might flood the neighbor to the west.

2. Plan still needs a curb detail and legend needs to show curb.

3. Address offsite flows:

   a. If the south portion of the lot is now accepting off-site water, it may need to be made to drain. This includes roof drainage from the building.

   b. How does the area west of this lot drain? You have not shown existing grades in the parking area. Does the water from the west drain into the proposed parking area and will the proposed scheme block these flows?

4. Show proposed grading for the parking area on the plan or include the grading sheet with the permit sets so the contractor has a copy. If the latter is done, put a note on the plan stating that other grades exist. It also appears that some of the top of the curb grades on the plan, along Douglas MacArthur, do not agree with proposed grades on the supplimental sheet.

MUNICIPAL DEVELOPMENT DEPARTMENT
C. Dwayne Sheppard, P.E., Acting City Engineer ENGINEERING DIVISION Telephone (505) 766-7487
AN EQUAL OPPORTUNITY EMPLOYER

5. Please submit an information sheet with future submittals.

If you have any questions, please feel free to call me at 766-7644.

Thank you,

John Armstrong

JA:mrk

INFORMATION SHEET

PROJECT TITLE Powdrell's Restaurant TYPE OF SUBMITTAL Drainage Plan

ZONE ATLAS PAGE NO. E-14 CITY ADDRESS 5209 Fourth St. NW

LEGAL DESCRIPTION Lot 1, Block 2, Douglas Macarthur Addition

ENGINEERING FIRM Isaacson & Arfman CONTACT Tom Isaacson

ADDRESS 128 Monroe NE, Albq 87108 PHONE 268-8828

OWNER Drell's Inc. CONTACT Joe Powdrell

ADDRESS 5501 Montgomery NE, Albq 87109 PHONE 883-1792

ARCHITECT Van H. Gilbert Architect CONTACT Jim Graf

ADDRESS 319 Central NW, #201, 87102 PHONE 247-9955

SURVEYOR Isaacson & Arfman CONTACT Tom Isaacson

ADDRESS 128 Monroe NE, Albq. 87108 PHONE 268-8828

CONTRACTOR Wallin Construction Co. CONTACT Greg Lutz

ADDRESS P.O.Box 13596, Albq. 87192 PHONE 292-5500

DATE SUBMITTED January 26, 1984

BY Van H. Gilbert Architect /by/ Jim Graf

Use this Information Sheet when submitting the following:

Drainage report or plan, conceptual grading and drainage plan, engineer's certification plan, erosion plan and grading plan. Provide the information applicable to your submittal.

RECEIVED JAN 26 1984 HYDROLOGY SECTION

Isaacson &
Arfman, P.A.

Consulting Engineering
Associates

RECEIVED
JAN 26 1984
HYDROLOGY SECTION

January 25, 1984

Mr. John Armstrong
Civil Engineer/Hydrology
City of Albuquerque
P.O. Box 1293
Albuquerque, N.M. 87103

RE: Powdrell's Restaurant Drainage Plans (F14-D17)

Dear Mr. Armstrong:

In response to your letter of January 23, 1984 regarding the revised grading/drainage plan submitted on January 17, 1984 we make the following comments:

1. We have revised the top of curb grades at the entrances to the parking lot per your suggestion. We have moved the top of driveway grades 10' away from the existing curb line to provide a gentler slope on the drivepads. We have also added a barrier along the east side of the parking lot to prevent any overflow from the parking lot into the adjacent property on the west.

2. We have added a curb detail and shown a legend for curbing.

3. Reference is made to your comments regarding offsite flows. The property is so flat that it is difficult to determine the direction of flows. However, in my opinion, the site does not accept water from either the property on the west or south. In any event, we are not grading adjacent to those property lines and consequently are not disturbing the historic pattern of flows.

4. As per your suggestion, we are showing finished contours in the parking lot area to assist the paving contractor during construction.

Very truly yours,

Thomas O. Isaacson

128 Monroe, NE • Albuquerque, NM 87108 • (505) 268-8828

TOI/naf

Isaacson &
Arfman, P.A.

Consulting Engineering
Associates

January 27, 1984

Mr. John Armstrong
Civil Engineer/Hydrology
City of Albuquerque
P.O. Box 1293
Albuquerque, N.M. 87103

RE: Powdrell's Restaurant Drainage Plans (F14-D17)

Dear Mr. Armstrong:

In response to your telephone comments of January 27, 1984 regarding the revised grading/drainage plan submitted on January 25, 1984 we make the following comments:

1. We have revised the driveway grades for a 12" rise in the first 10' of driveway.

2. We have revised the berm location & grade to force all water out the driveways in the event of storm drain backup flows.

3. We have calculated the water elevation in the parking lot for the event of drain backup flows. See attached calculation sheet.

We are re-submitting the revised plan showing these changes.

Very truly yours,

Thomas O. Isaacson

Attachment

TOI/naf

RECEIVED
JAN 27 1984
HYDROLOGY SECTION

128 Monroe, NE • Albuquerque, NM 87108 • (505) 268-8828

Spillway Calculations :

- Assume Water at Top of Curb at 4th St, Elev 72.8
- Assume Storm Drain Backing Up into Parking Lot and overflowing Westerly driveway into Douglas MacArthur with 0.15' depth of flow, or Elev 72.45
- Available Head = 72.8 - 72.45 = 0.35
- Assume No head loss in 12" drain and all friction loss in 6" lateral into parking lot
- Compute backflow in 6" PVC parking lot lateral

  $Q = 0.89$ cfs
- Compute Depth of Flow over driveway

  Broad Crested Weir Formula

  $Q = 3.08\, L\, H^{2.5}$

  Solving for H

  $H = \left(Q / 3.08 \times L\right)^{1/2.5}$

  $= \left(.89 / 3.08 \times 23\right)^{1/2.5}$

  $= 0.17'$
- Top of Berm Elev

Parking Lot Water Surface	= 72.47
+ 0.3' freeboard	0.3
Top Berm	= 72.77
Round to	72.8

RECEIVED JAN 27 1984 HYDROLOGY SECTION

Isaacson & Arfman, P.A.

SUBJECT Powdrell's Restaurant JOB NO.

BY TOI DATE 1/27/84 SHEET NO. 1 OF 1

City of Albuquerque FILE COPY
P.O. BOX 1293 ALBUQUERQUE, NEW MEXICO 87103

January 31, 1984

Mr. Thomas O. Isaacson
Isaacson & Arfman, P.A.
128 Monroe NE
Albuquerque, New Mexico 87108

RE: POWDRELL'S RESTAURANT DRAINAGE PLAN (F14-D17)

Dear Mr. Isaacson:

The above mentioned plan, as revised January 27, 1984, is hereby approved. Please see that the revised plan and approved copies of "Drainage Facilities Within City Right-of-Way" Documents are attached to the permit sets prior to submittal to Hydrology for sign off.

Thank you,

John Armstrong
Civil Engineer/Hydrology

JA/ca

cc: Mr. Jim Grat

CITY OF ALBUQUERQUE

DRAINAGE FACILITIES WITHIN CITY RIGHT-OF-WAY

Steve Chavez
Hydro

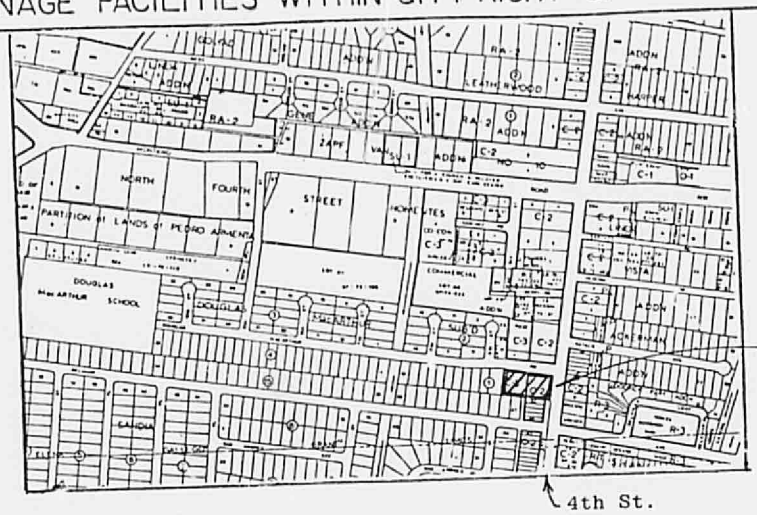

VICINITY MAP
1"=750'±

Legal Description: Lot 1 of Block 2 of the Douglas MacArthur Subdivision
Address: 5209 4th Street NW

F14-D17

REGISTERED PROFESSIONAL ENGINEER & LAND SURVEYOR No.3895 NEW MEXICO THOMAS O. ISAACSON
12/10/83

NOTICE TO CONTRACTOR

1. An excavation/construction permit will be required before beginning any work within City right-of-way. An approved copy of these plans must be submitted at the time of application for this permit.
2. All work detailed on these plans to be performed, except as otherwise stated or provided hereon, shall be constructed in accordance with "Contract Documents for City-Wide Utilities and Cash Paving No. 31 "
3. Two working days prior to any excavation, contractor must contact Line Locating Service, 765-1234, for location of existing utilities.
4. Prior to construction, the contractor shall excavate and verify the horizontal and vertical locations of all obstructions. Should a conflict exist, the contractor shall notify the engineer so that the conflict can be resolved with a minimum amount of delay.
5. Backfill compaction shall be according to Residential street use.

Universal Const. P-12654 C-163

APPROVALS	NAME	DATE	TITLE: Powdrell's Restaurant Storm Drain Lateral 5209 4th St NW	
A.C.E./DESIGN	[illegible]	21 Dec 83		
INSPECTOR	[illegible]	5/25/84	PERMIT NO.	MAP NO. F-14
A.C.E./FIELD	W.F. McNamara	5/29/84	SHEET 1 OF 2	

CITY OF ALBUQUERQUE

DRAINAGE FACILITIES WITHIN CITY RIGHT-OF-WAY

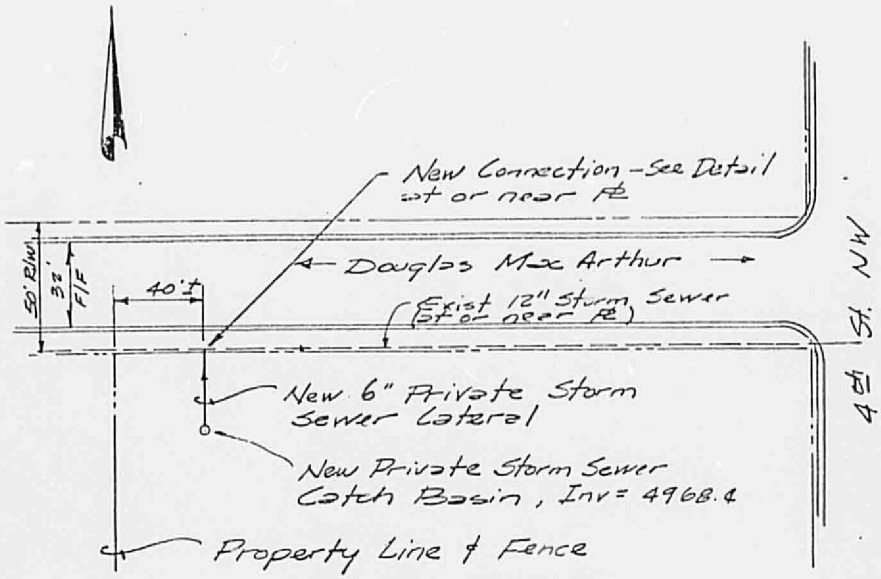

SITE PLAN

1" = 50'

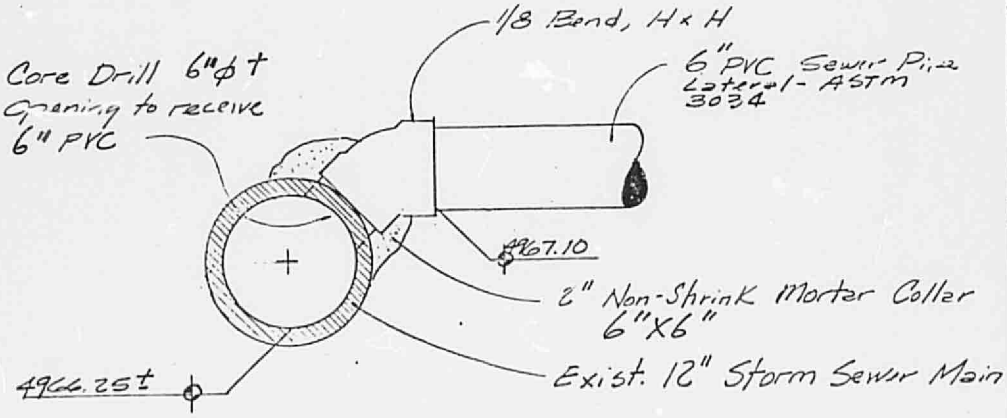

CONNECTION DETAIL

Scale: 1" = 1'-0"

C-163

APPROVALS	NAME	DATE	TITLE: Powdrell's Restaurant Storm Drain Lateral 5209 4th ST NW	
A.C.E./DESIGN	[illegible]	21 Dec 83		
INSPECTOR	[illegible]	5/25/84	PERMIT NO.	MAP
A.C.E./FIELD	[illegible]	5/29/84	SHEET 2 OF 2	NO. F-14