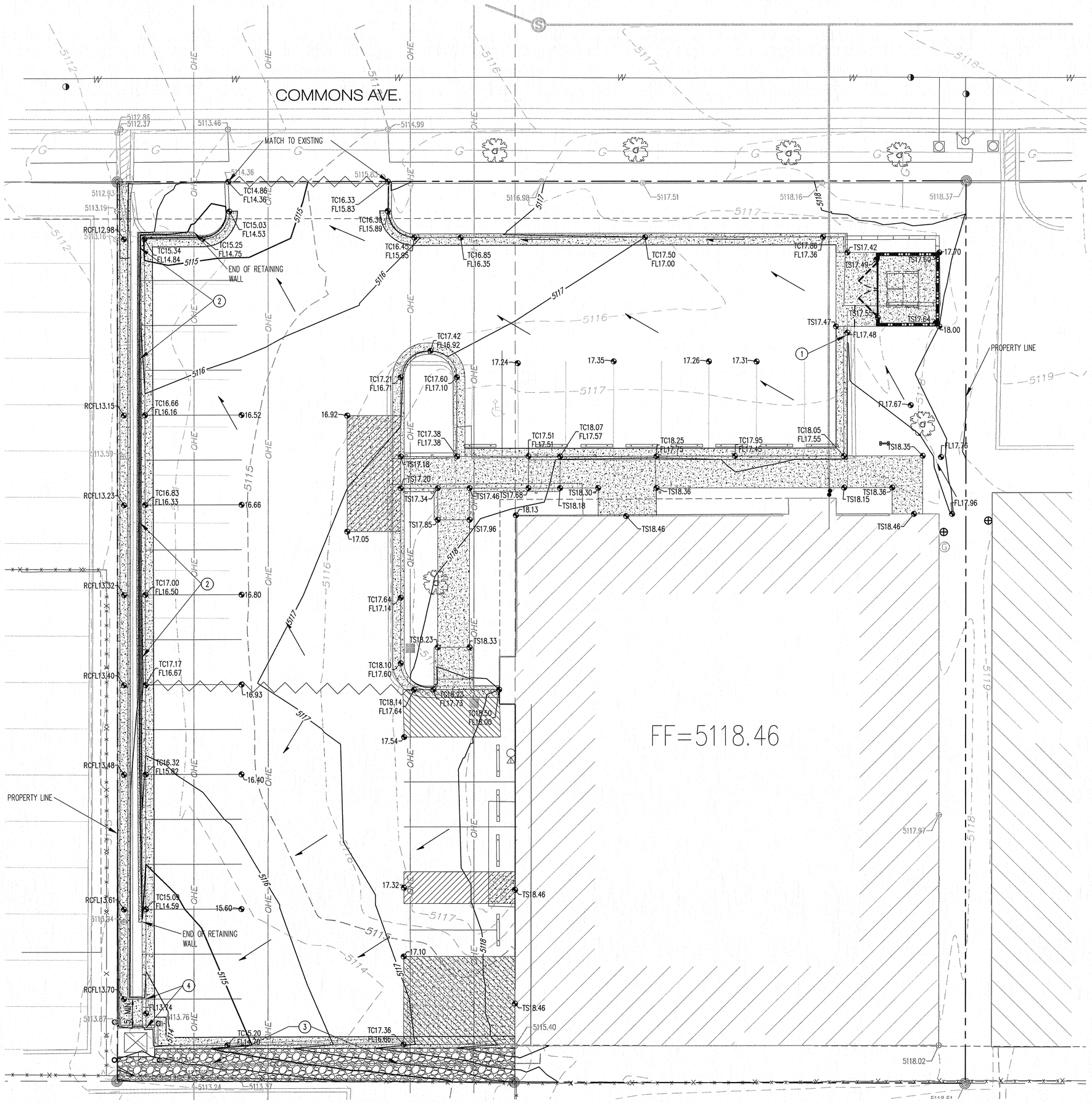

BENCHMARK

ALBUQUERQUE CONTROL SURVEY MONUMENT "I-25-18"HAVING A PUBLISHED ELEVATION OF 5128.34 (NGVD 88).

LEGEND

- PROPERTY LINE
- 5301 EXISTING CONTOURS
- 36.90 PROPOSED SPOT ELEVATION
  - TC=TOP OF CURB, FL=FLOW LINE
  - TS=TOP OF SIDEWALK, TA=TOP OF ASPHALT
  - EX=EXISTING, FG=FINISHED GRADE
  - FGH=FINISHED GRADE HIGH
  - FGL=FINISHED GRADE LOW
- S=2.0% PROPOSED DIRECTION OF FLOW
- WATER BLOCK
- PROPOSED RETAINING WALL
- 5305 PROPOSED INDEX CONTOURS
- PROPOSED INTER CONTOURS

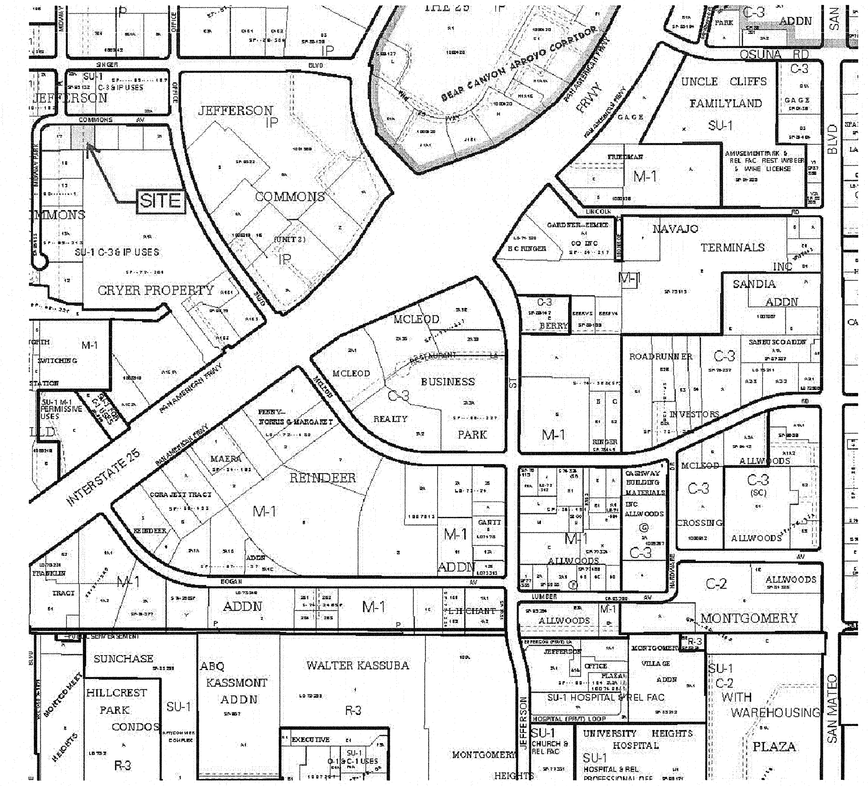

VICINITY MAP - ZONE MAP F-17

KEYED NOTES

1. INSTALL 4' WIDE CURB OPENING PER DETAIL THIS SHEET.
2. CONSTRUCT RETAINING WALL PER DETAIL 2 THIS SHEET. SEE PLAN TOP OF WALL AND RIBBON CHANNEL FLOW LINE ELEVATIONS.
3. INSTALL TYPE "L ANGULAR RIP RAP PER NM APWA STD SPEC SECTION 109.
4. TIE NEW CURB AND GUTTER TO RIBBON CHANNEL WITH A 5' WIDE OPENING IN THE CURB.

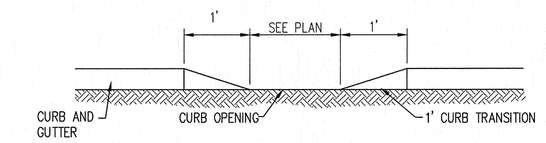

1 TYPICAL CURB CUT
NTS

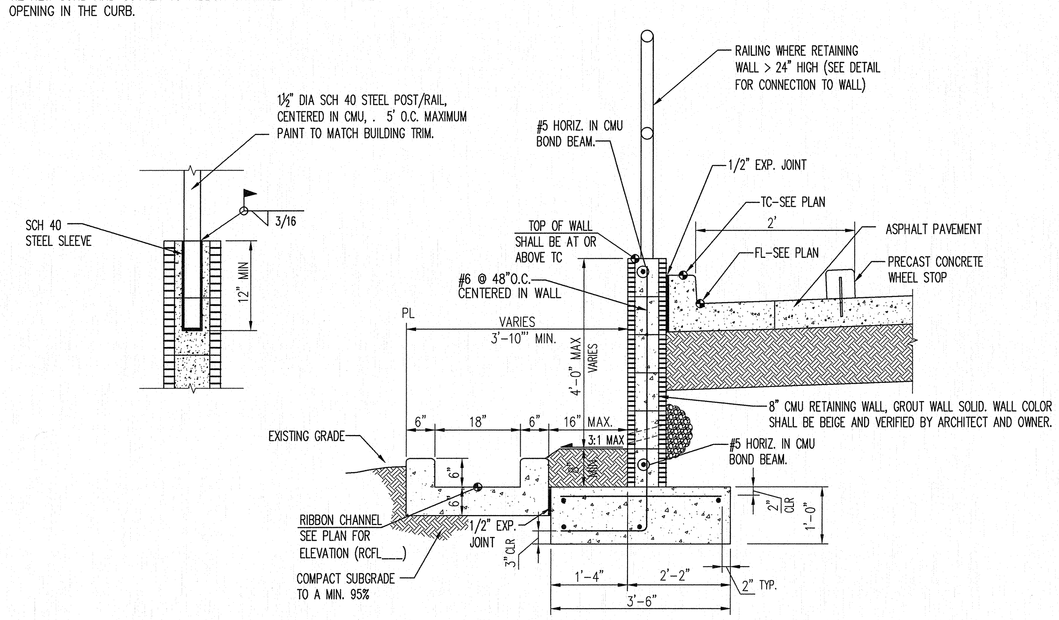

2 TYPICAL RETAINING WALL /RIBBON CHANNEL DETAIL
NTS

GENERAL NOTES

1. ALL WORK DETAILED ON THESE PLANS AND PERFORMED UNDER THIS CONTRACT SHALL BE CONSTRUCTED IN ACCORDANCE WITH THE PROJECT SPECIFICATIONS AND THE PROJECT GEOTECHNICAL REPORT. WHERE APPLICABLE, CITY OF ALBUQUERQUE PUBLIC WORKS STANDARDS SHALL APPLY.

2. THE CONTRACTOR SHALL ABIDE BY ALL LOCAL, STATE, AND FEDERAL LAWS, RULES AND REGULATIONS WHICH APPLY TO THE CONSTRUCTION OF THESE IMPROVEMENTS, INCLUDING EPA REQUIREMENTS WITH RESPECT TO STORM WATER DISCHARGE.

3. PRIOR TO CONSTRUCTION, THE CONTRACTOR SHALL FIELD VERIFY THE HORIZONTAL AND VERTICAL LOCATIONS OF ALL POTENTIAL OBSTRUCTIONS INCLUDING ALL UNDERGROUND UTILITIES. SHOULD A CONFLICT EXIST, THE CONTRACTOR SHALL NOTIFY THE CONSTRUCTION OBSERVER OR ENGINEER SO THAT THE CONFLICT CAN BE RESOLVED WITH A MINIMUM AMOUNT OF DELAY.

4. TWO (2) WORKING DAYS PRIOR TO ANY EXCAVATION, THE CONTRACTOR SHALL CONTACT LINE LOCATING SERVICE FOR LOCATION OF EXISTING UTILITIES.

5. ALL ELECTRICAL, TELEPHONE, CABLE TV, GAS AND OTHER UTILITY LINES, CABLES, AND APPURTENANCES ENCOUNTERED DURING CONSTRUCTION THAT REQUIRE RELOCATION, SHALL BE COORDINATED WITH THAT UTILITY. THE CONTRACTOR SHALL BE RESPONSIBLE FOR COORDINATION OF ALL NECESSARY UTILITY ADJUSTMENTS. NO ADDITIONAL COMPENSATION WILL BE ALLOWED FOR DELAYS OR INCONVENIENCES CAUSED BY UTILITY COMPANY WORK CREWS. THE CONTRACTOR MAY BE REQUIRED TO RESCHEDULE HIS ACTIVITIES TO ALLOW UTILITY CREWS TO PERFORM THEIR REQUIRED WORK.

6. THE CONTRACTOR IS RESPONSIBLE FOR PROTECTING ALL EXISTING UTILITY LINES WITHIN THE CONSTRUCTION AREA. ANY DAMAGE TO EXISTING FACILITIES CAUSED BY CONSTRUCTION ACTIVITY SHALL BE REPAIRED OR REPLACED AT THE CONTRACTOR'S EXPENSE AND APPROVED BY THE CONSTRUCTION OBSERVER.

7. CONSTRUCTION ACTIVITY SHALL BE LIMITED TO THE PROPERTY AND/OR PROJECT LIMITS. ANY DAMAGE TO ADJACENT PROPERTIES RESULTING FROM THE CONSTRUCTION PROCESS SHALL BE REPAIRED OR REPLACED AT THE CONTRACTOR'S EXPENSE.

8. OVERNIGHT PARKING OF CONSTRUCTION EQUIPMENT SHALL NOT OBSTRUCT DRIVEWAYS OR DESIGNATED TRAFFIC LANES. THE CONTRACTOR SHALL NOT STORE ANY EQUIPMENT OR MATERIAL WITHIN THE PUBLIC RIGHT-OF-WAY.

9. THE CONTRACTOR SHALL OBTAIN ALL THE NECESSARY PERMITS FOR THE PROJECT PRIOR TO COMMENCING CONSTRUCTION (I.E., BARRICADING, TOPSOIL DISTURBANCE, EXCAVATION PERMITS, EPA STORM WATER PERMITS, ETC.).

10. ALL PROPERTY CORNERS DESTROYED DURING CONSTRUCTION SHALL BE REPLACED AT THE CONTRACTOR'S EXPENSE. ALL PROPERTY CORNERS MUST BE RESET BY A REGISTERED LAND SURVEYOR.

11. THE CONTRACTOR SHALL PREPARE A CONSTRUCTION TRAFFIC CONTROL AND SIGNING PLAN AND OBTAIN APPROVAL OF SUCH PLAN FROM THE CITY OF ALBUQUERQUE, TRAFFIC ENGINEERING DEPARTMENT, PRIOR TO BEGINNING ANY CONSTRUCTION WORK ON OR ADJACENT TO EXISTING STREETS.

12. ALL BARRICADES AND CONSTRUCTION SIGNING SHALL CONFORM TO APPLICABLE SECTIONS OF THE "MANUAL ON UNIFORM TRAFFIC CONTROL DEVICES" (MUTCD), US DEPARTMENT OF TRANSPORTATION, LATEST EDITION.

13. THE CONTRACTOR SHALL MAINTAIN ALL CONSTRUCTION BARRICADES AND SIGNING AT ALL TIMES. THE CONTRACTOR SHALL VERIFY THE PROPER LOCATION OF ALL BARRICADING AT THE END AND BEGINNING OF EACH DAY.

14. THE CONTRACTOR SHALL TAKE ALL STEPS NECESSARY TO CONFORM WITH EPA REQUIREMENTS, INCLUDING COMPLIANCE WITH NPDES PHASE 2 REQUIREMENTS.

GRADING NOTES

1. EXCEPT AS PROVIDED HEREIN, GRADING SHALL BE PERFORMED AT THE ELEVATIONS AND IN ACCORDANCE WITH THE DETAILS SHOWN ON THIS PLAN.

2. THE COST FOR REQUIRED CONSTRUCTION DUST AND EROSION CONTROL MEASURES SHALL BE INCIDENTAL TO THE PROJECT COST.

3. ALL WORK RELATIVE TO FOUNDATION CONSTRUCTION, SITE PREPARATION, AND PAVEMENT INSTALLATION, AS SHOWN ON THIS PLAN, SHALL BE CONSTRUCTED IN ACCORDANCE WITH THE "GEOTECHNICAL INVESTIGATION". ALL OTHER WORK SHALL, UNLESS OTHERWISE STATED OR PROVIDED FOR HEREON, BE CONSTRUCTED IN ACCORDANCE WITH THE PROJECT, (FIRST PRIORITY) SPECIFICATIONS, AND/OR THE CITY OF ALBUQUERQUE (COA) STANDARD SPECIFICATIONS FOR PUBLIC WORKS (SECOND PRIORITY).

4. EARTH SLOPES SHALL NOT EXCEED 3 HORIZONTAL TO 1 VERTICAL UNLESS SHOWN OTHERWISE.

5. IT IS THE INTENT OF THESE PLANS THAT THIS CONTRACTOR SHALL NOT PERFORM ANY WORK OUTSIDE OF THE PROPERTY BOUNDARIES EXCEPT AS REQUIRED BY THIS PLAN.

6. THE CONTRACTOR IS TO ENSURE THAT NO SOIL ERODES FROM THE SITE ONTO ADJACENT PROPERTY OR PUBLIC RIGHT-OF-WAY.

7. A DISPOSAL SITE FOR ANY & ALL EXCESS EXCAVATION MATERIAL, AND UNSUITABLE MATERIAL AND/OR A BORROW SITE CONTAINING ACCEPTABLE FILL MATERIAL SHALL BE OBTAINED BY THE CONTRACTOR IN COMPLIANCE WITH APPLICABLE ENVIRONMENTAL REGULATIONS AND APPROVED BY THE OBSERVER. ALL COSTS INCURRED IN OBTAINING A DISPOSAL OR BORROW SITE AND HAUL TO OR FROM SHALL BE CONSIDERED INCIDENTAL TO THE PROJECT AND NO SEPARATE MEASUREMENT OR PAYMENT SHALL BE MADE.

8. PAVING AND ROADWAY GRADES SHALL BE +/- 0.1' FROM PLAN ELEVATIONS. PAD ELEVATION SHALL BE +/- 0.05' FROM BUILDING PLAN ELEVATION.

9. ALL PROPOSED CONTOURS REFLECT TOP OF PAVEMENT ELEVATIONS IN THE PARKING AREA AND MUST BE ADJUSTED FOR MEDIANS AND ISLANDS.

10. VERIFY ALL ELEVATIONS SHOWN ON PLAN FROM BASIS OF ELEVATION CONTROL STATION PRIOR TO BEGINNING CONSTRUCTION.

RETAINING WALL NOTES:

1. RETAINING WALL SHALL NOT BE BACK-FILLED UNTIL AT LEAST 7 DAYS AFTER CASTING THE WALL.
2. VERTICAL CONTROL JOINTS IN THE WALL SHALL BE PLACED AT 8'-0" O.C. MAX.
3. CONTRACTOR SHALL NOTIFY OWNER PRIOR TO CONCRETE FOOTING POUR FOR INSPECTION OF COMPACTION UNDER FOOTING, FOOTING DEPTH AND WIDTH AND WALL STEEL AND SPACING. FINAL INSPECTION OF FOOTING AND WALL WILL BE REQUIRED.
4. THE CONTRACTOR SHALL BE RESPONSIBLE TO SEE THAT ALL REBAR IS PROPERLY ALIGNED AND TIED IN PLACE BEFORE PLACING CONCRETE. ALL STEEL SHALL BE ACCURATELY LOCATED AND SECURED IN PLACE SO THAT IT REMAINS IN POSITION DURING THE PLACEMENT OF THE CONCRETE. ANY REBAR IMPROPERLY INSTALLED SHALL BE REMOVED AT NO ADDITIONAL COST TO THE OWNER.
5. WEEP HOLES: PLACE A 2" DIA. WEEP HOLE @ 5'-0" O.C. W/ 1/2 CUBIC FOOT/FOOT OF 3/4" GRAVEL IN FILTER FABRIC
6. THE FIRST COURSE OF CMU BLOCK MAY BE PLACED IN FRESH FOOTING CONCRETE. SUBSEQUENT COURSES OF CMU BLOCK SHALL NOT BE PLACED UNTIL 7 DAYS AFTER THE FOOTING IS CAST.
7. BACK FILL AND COMPACTION OF RETAINING WALL IS INCIDENTAL TO INSTALLATION OF RETAINING WALL.

Bohannan Huston

MICHAEL BALASKOVITS NEW MEXICO 18187 LICENSED PROFESSIONAL ENGINEER 10.4.12

P:\20130163\CDP\Plans\General\20130163GP01.dwg
Thu, 4-Oct-2012 - 2:33:pm, Plotted by: MBALASKOVITS

Christopher Kidd & Associates, LLC
Architects and Engineers
N48W16550 Lisbon Road
Menomonee Falls, Wisconsin 53051
Phone 262.901.0505 / Facsimile 262.901.0510
Email: arch@ckiddarchitects.com Website: www.ckiddarchitects.com

Proposed Dialysis Clinic for:
LD - Albuquerque
3810 Commons Avenue NE
Albuquerque, New Mexico 87109

These drawings, as instruments of service, remain the property of the Architect or Engineer. Any changes, publication, or use of any kind is prohibited unless expressly authorized by said party.

Copyright 2012

Drafted By:

Checked By:

Date Drafted:

Project #:

C1.0

GRADING & DRAINAGE PLAN