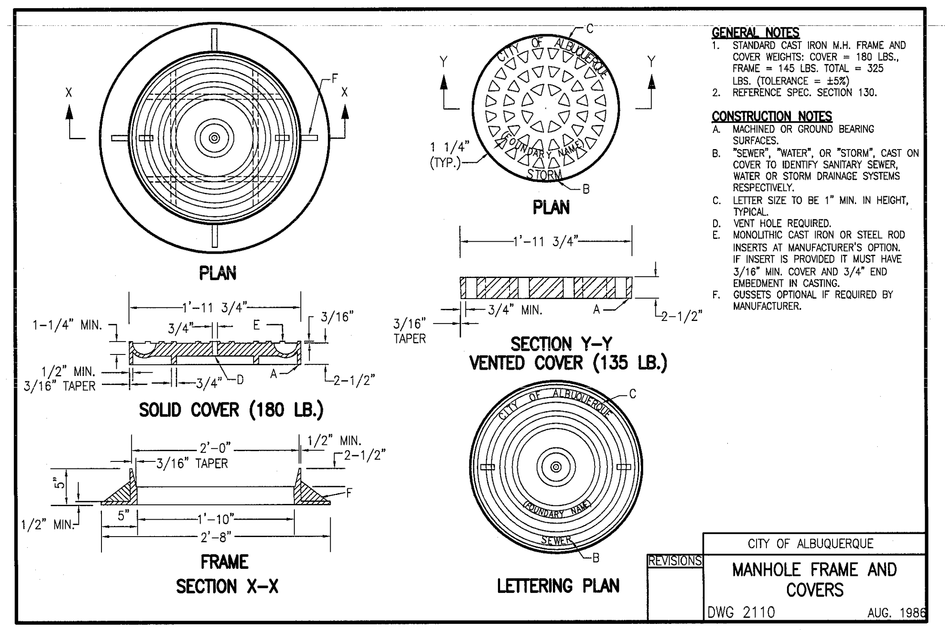

GENERAL NOTES

1. STANDARD CAST IRON M.H. FRAME AND COVER WEIGHTS: COVER = 180 LBS., FRAME = 145 LBS. TOTAL = 325 LBS. (TOLERANCE = ±5%)
2. REFERENCE SPEC. SECTION 130.

CONSTRUCTION NOTES

A. MACHINED OR GROUND BEARING SURFACES.
B. "SEWER", "WATER", OR "STORM", CAST ON COVER TO IDENTIFY SANITARY SEWER, WATER OR STORM DRAINAGE SYSTEMS RESPECTIVELY.
C. LETTER SIZE TO BE 1" MIN. IN HEIGHT, TYPICAL.
D. VENT HOLE REQUIRED.
E. MONOLITHIC CAST IRON OR STEEL ROD INSERTS AT MANUFACTURER'S OPTION. IF INSERT IS PROVIDED IT MUST HAVE 3/16" MIN. COVER AND 3/4" END EMBEDMENT IN CASTING.
F. GUSSETS OPTIONAL IF REQUIRED BY MANUFACTURER.

REVISIONS	CITY OF ALBUQUERQUE
	MANHOLE FRAME AND COVERS
	DWG 2110 — AUG. 1986

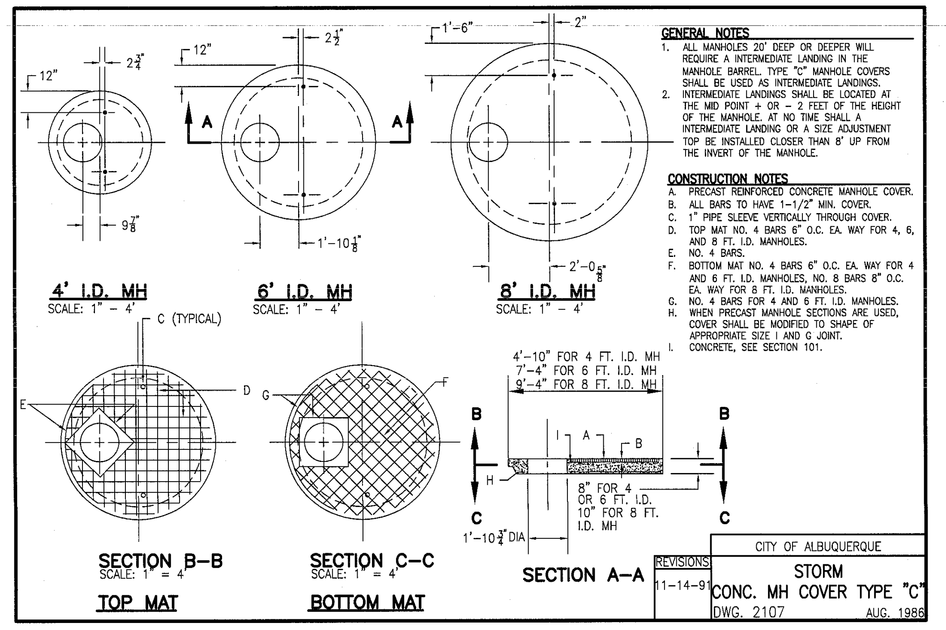

GENERAL NOTES

1. ALL MANHOLES 20' DEEP OR DEEPER WILL REQUIRE A INTERMEDIATE LANDING IN THE MANHOLE BARREL. TYPE "C" MANHOLE COVERS SHALL BE USED AS INTERMEDIATE LANDINGS.
2. INTERMEDIATE LANDINGS SHALL BE LOCATED AT THE MID POINT + OR – 2 FEET OF THE HEIGHT OF THE MANHOLE. AT NO TIME SHALL A INTERMEDIATE LANDING OR A SIZE ADJUSTMENT TOP BE INSTALLED CLOSER THAN 8' UP FROM THE INVERT OF THE MANHOLE.

CONSTRUCTION NOTES

A. PRECAST REINFORCED CONCRETE MANHOLE COVER.
B. ALL BARS TO HAVE 1-1/2" MIN. COVER.
C. 1" PIPE SLEEVE VERTICALLY THROUGH COVER.
D. TOP MAT NO. 4 BARS 6" O.C. EA. WAY FOR 4, 6, AND 8 FT. I.D. MANHOLES.
E. NO. 4 BARS.
F. BOTTOM MAT NO. 4 BARS 6" O.C. EA. WAY FOR 4 AND 6 FT. I.D. MANHOLES, NO. 8 BARS 8" O.C. EA. WAY FOR 8 FT. I.D. MANHOLES.
G. NO. 4 BARS FOR 4 AND 6 FT. I.D. MANHOLES.
H. WHEN PRECAST MANHOLE SECTIONS ARE USED, COVER SHALL BE MODIFIED TO SHAPE OF APPROPRIATE SIZE I AND G JOINT.
I. CONCRETE, SEE SECTION 101.

REVISIONS	CITY OF ALBUQUERQUE
11-14-91	STORM CONC. MH COVER TYPE "C"
	DWG. 2107 — AUG. 1986

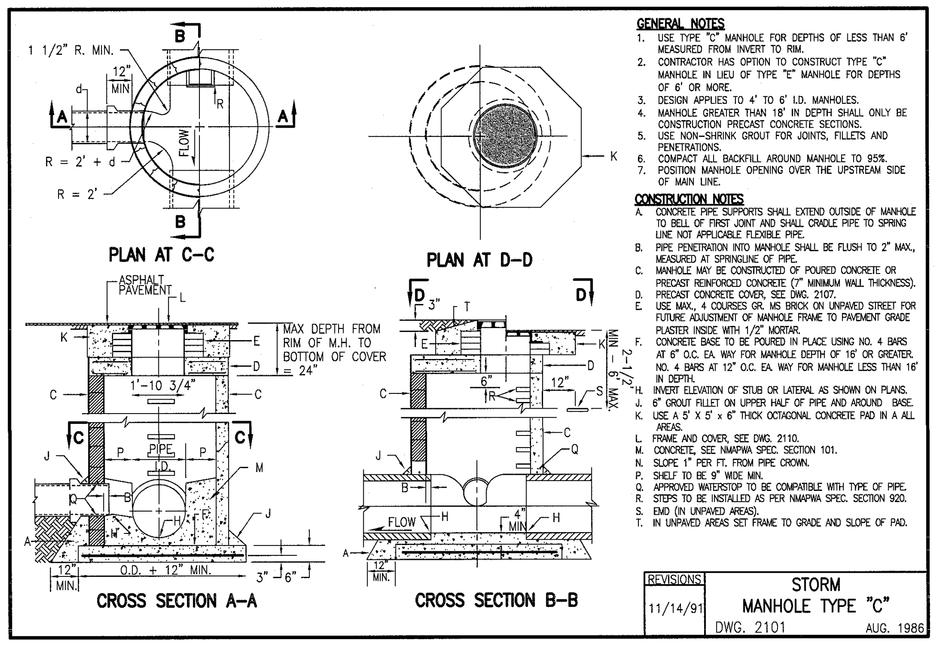

GENERAL NOTES

1. USE TYPE "C" MANHOLE FOR DEPTHS OF LESS THAN 6' MEASURED FROM INVERT TO RIM.
2. CONTRACTOR HAS OPTION TO CONSTRUCT TYPE "C" MANHOLE IN LIEU OF TYPE "E" MANHOLE FOR DEPTHS OF 6' OR MORE.
3. DESIGN APPLIES TO 4' TO 6' I.D. MANHOLES.
4. MANHOLE GREATER THAN 18" IN DEPTH SHALL ONLY BE CONSTRUCTION PRECAST CONCRETE SECTIONS.
5. USE NON-SHRINK GROUT FOR JOINTS, FILLETS AND PENETRATIONS.
6. COMPACT ALL BACKFILL AROUND MANHOLE TO 95%.
7. POSITION MANHOLE OPENING OVER THE UPSTREAM SIDE OF MAIN LINE.

CONSTRUCTION NOTES

A. CONCRETE PIPE SUPPORTS SHALL EXTEND OUTSIDE OF MANHOLE TO BELL OF FIRST JOINT AND SHALL CRADLE PIPE TO SPRING LINE NOT APPLICABLE FLEXIBLE PIPE.
B. PIPE PENETRATION INTO MANHOLE SHALL BE FLUSH TO 2" MAX., MEASURED AT SPRINGLINE OF PIPE.
C. MANHOLE MAY BE CONSTRUCTED OF POURED CONCRETE OR PRECAST REINFORCED CONCRETE (7" MINIMUM WALL THICKNESS).
D. PRECAST CONCRETE COVER, SEE DWG. 2107.
E. USE MAX., 4 COURSES GR. MS BRICK ON UNPAVED STREET FOR FUTURE ADJUSTMENT OF MANHOLE FRAME TO PAVEMENT GRADE PLASTER INSIDE WITH 1/2" MORTAR.
F. CONCRETE BASE TO BE POURED IN PLACE USING NO. 4 BARS AT 6" O.C. EA. WAY FOR MANHOLE DEPTH OF 16' OR GREATER, NO. 4 BARS AT 12" O.C. EA. WAY FOR MANHOLE LESS THAN 16' IN DEPTH.
H. INVERT ELEVATION OF STUB OR LATERAL AS SHOWN ON PLANS.
J. 6" GROUT FILLET ON UPPER HALF OF PIPE AND AROUND BASE.
K. USE A 5' X 5' x 6" THICK OCTAGONAL CONCRETE PAD IN A ALL AREAS.
L. FRAME AND COVER, SEE DWG. 2110.
M. CONCRETE, SEE NMAPWA SPEC. SECTION 101.
N. SLOPE 1" PER FT. FROM PIPE CROWN.
P. SHELF TO BE 9" WIDE MIN.
Q. APPROVED WATERSTOP TO BE COMPATIBLE WITH TYPE OF PIPE.
R. STEPS TO BE INSTALLED AS PER NMAPWA SPEC. SECTION 920.
S. EMD (IN UNPAVED AREAS).
T. IN UNPAVED AREAS SET FRAME TO GRADE AND SLOPE OF PAD.

REVISIONS	STORM
11/14/91	MANHOLE TYPE "C"
	DWG. 2101 — AUG. 1986

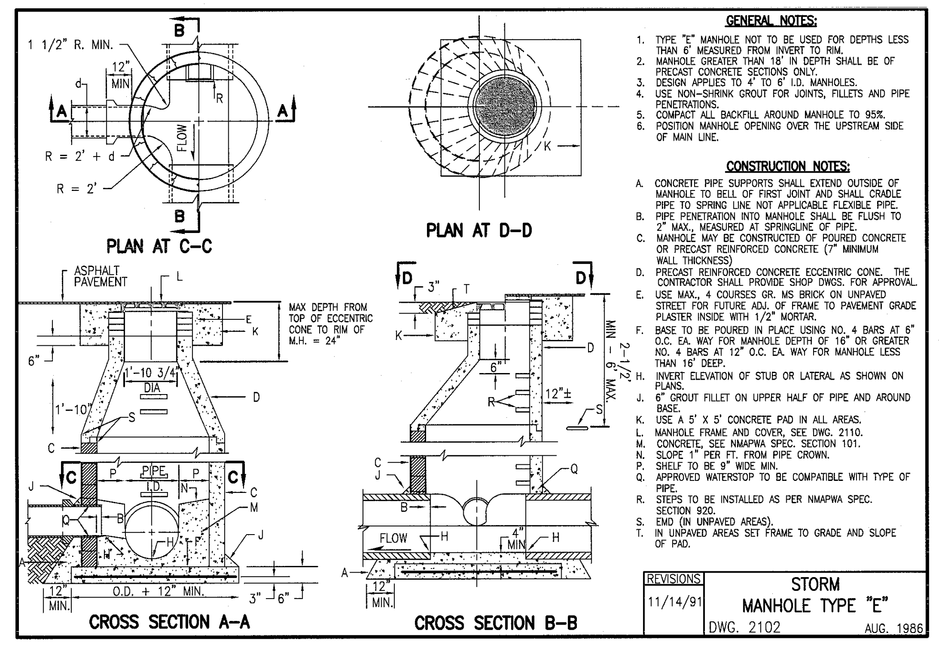

GENERAL NOTES:

1. TYPE "E" MANHOLE NOT TO BE USED FOR DEPTHS LESS THAN 6' MEASURED FROM INVERT TO RIM.
2. MANHOLE GREATER THAN 18" IN DEPTH SHALL BE OF PRECAST CONCRETE SECTIONS ONLY.
3. DESIGN APPLIES TO 4' TO 6' I.D. MANHOLES.
4. USE NON-SHRINK GROUT FOR JOINTS, FILLETS AND PIPE PENETRATIONS.
5. COMPACT ALL BACKFILL AROUND MANHOLE TO 95%.
6. POSITION MANHOLE OPENING OVER THE UPSTREAM SIDE OF MAIN LINE.

CONSTRUCTION NOTES:

A. CONCRETE PIPE SUPPORTS SHALL EXTEND OUTSIDE OF MANHOLE TO BELL OF FIRST JOINT AND SHALL CRADLE PIPE TO SPRING LINE NOT APPLICABLE FLEXIBLE PIPE.
B. PIPE PENETRATION INTO MANHOLE SHALL BE FLUSH TO 2" MAX., MEASURED AT SPRINGLINE OF PIPE.
C. MANHOLE MAY BE CONSTRUCTED OF POURED CONCRETE OR PRECAST REINFORCED CONCRETE (7" MINIMUM WALL THICKNESS)
D. PRECAST REINFORCED CONCRETE ECCENTRIC CONE. THE CONTRACTOR SHALL PROVIDE SHOP DWGS. FOR APPROVAL.
E. USE MAX., 4 COURSES GR. MS BRICK ON UNPAVED STREET FOR FUTURE ADJ. OF FRAME TO PAVEMENT GRADE PLASTER INSIDE WITH 1/2" MORTAR.
F. BASE TO BE POURED IN PLACE USING NO. 4 BARS AT 6" O.C. EA. WAY FOR MANHOLE DEPTH OF 16" OR GREATER NO. 4 BARS AT 12" O.C. EA. WAY FOR MANHOLE LESS THAN 16' DEEP.
H. INVERT ELEVATION OF STUB OR LATERAL AS SHOWN ON PLANS.
J. 6" GROUT FILLET ON UPPER HALF OF PIPE AND AROUND BASE.
K. USE A 5' X 5' CONCRETE PAD IN ALL AREAS.
L. MANHOLE FRAME AND COVER, SEE DWG. 2110.
M. CONCRETE, SEE NMAPWA SPEC. SECTION 101.
N. SLOPE 1" PER FT. FROM PIPE CROWN.
P. SHELF TO BE 9" WIDE MIN.
Q. APPROVED WATERSTOP TO BE COMPATIBLE WITH TYPE OF PIPE.
R. STEPS TO BE INSTALLED AS PER NMAPWA SPEC. SECTION 920.
S. EMD (IN UNPAVED AREAS).
T. IN UNPAVED AREAS SET FRAME TO GRADE AND SLOPE OF PAD.

REVISIONS	STORM
11/14/91	MANHOLE TYPE "E"
	DWG. 2102 — AUG. 1986

ARCHITECTURE / DESIGN / INSPIRATION

DEKKER PERICH SABATINI

7601 JEFFERSON NE, SUITE 100
ALBUQUERQUE, NM 87109

505.761.9700 / DPSDESIGN.ORG

ARCHITECT

ENGINEER

I, GRAEME MEANS, NEW MEXICO, 13676, REGISTERED PROFESSIONAL ENGINEER
6/25/2014

PROJECT

DEL NORTE HIGH SCHOOL
5323 MONTGOMERY NE
ALBUQUERQUE, NM

CAFETERIA BUILDING

REVISIONS

DRAWN BY	J.Y.R.
REVIEWED BY	G.M.
DATE	07-01-2014
PROJECT NO.	08-0041

DRAWING NAME

MANHOLE SECTIONS AND DETAILS

SHEET NO.

CG-302

OF

HIGH MESA Consulting Group
6010-B MIDWAY PARK BLVD. NE • ALBUQUERQUE, NEW MEXICO 87109
PHONE: 505.345.4250 • FAX: 505.345.4254 • www.highmesacg.com
2010.048.1

File Path: p:\dwg\2010\048.1\DNG\CP1 | Plot Date: 06-19-2014
File Name: 1004B1_CG-302.DWG | Plot Time: 10:16 am