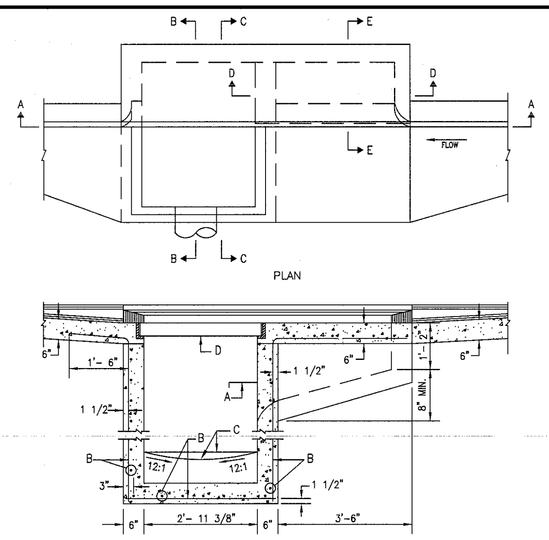

GENERAL NOTES:

1. SEE DWG. 2202 FOR TYPE "A" INLET SECTIONS.
2. FOR STORM INLET GUTTER TRANSITION, SEE DWG. 2207.
3. OUTLET PIPE SIZE, PER DESIGN REQUIREMENT.
4. FOR FRAME & GRATING, SEE DWGS. 2216, 2220 & 2221.

CONSTRUCTION NOTES:

A. FOR STORM INLET DEPTHS GREATER THAN 4', INSTALL STD. STEPS, SEE DWG. 2229.
B. NO. 4 BARS AT 6" O.C. EACH WAY.
C. CONCRETE FILL, MINIMUM SLOPE SHOWN IN SECTION A–A.
D. GRATE.

DRAINAGE
STORM INLET TYPE "A"
PLAN AND SECTION A–A
DWG. 2201

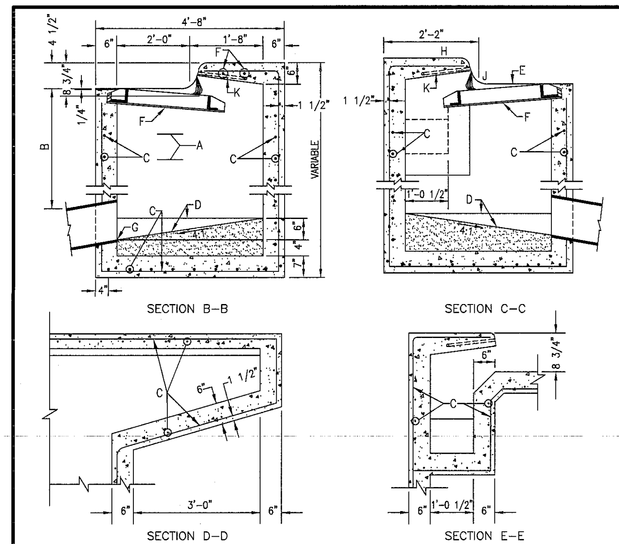

GENERAL NOTES:

1. 1. SEE DWG. 2201 FOR PLAN AND SECTION A–A.
2. GENERAL NOTES 2, 3 & 4 ON DWG. 2201 ALSO APPLY TO THIS DWG.
3. FOR ANCHOR DETAIL, SEE DWG. 2205.

CONSTRUCTION NOTES:

A. STORM INLET STEPS, SEE DWG. 2229 FOR SPACING.
B. 1"– 10" MIN UNLESS OTHERWISE DIRECTED.
C. NO. 4 BARS AT 6" O.C. EACH WAY.
D. CONCRETE FILL MINIUM SLOPES SHOWN IN SECTIONS.
E. NORMAL GUTTER.
F. GRATE FRAME.
G. INVERT ELEVATION PER DESIGN.
H. TOP OF CURB.
J. FLOWLINE.
K. ANGLE ANCHOR.

DRAINAGE
STORM INLET TYPE "A"
SECTIONS B–B,C–C,D–D,&E–E
DWG. 2202

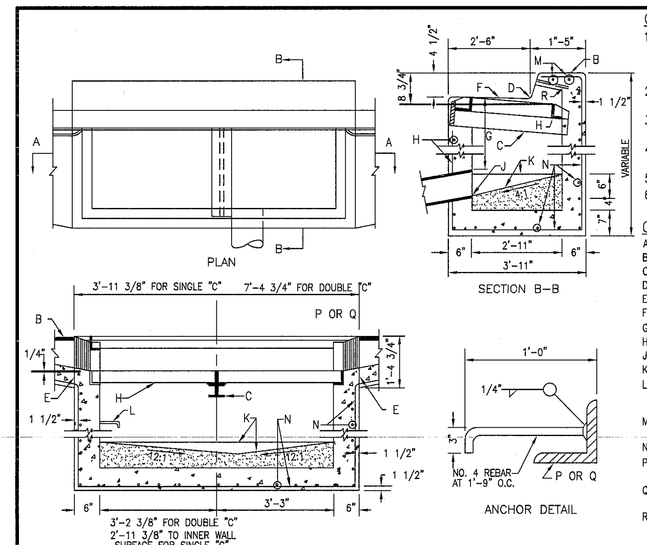

GENERAL NOTES:

1. FOR SINGLE GRATE TYPE STORM INLET DELETE CENTER SUPPORT AND MOVE ONE END WALL TO FORM NEW SINGLE GRATE INLET.
2. FOR STORM INLET GUTTER TRANSITION, SEE DWG 2207.
3. OUTLET PIPE SIZE. PER DESIGN REQUIREMENT.
4. FOR FRAME & GRATING, SEE DWGS. 2216 AND 2220.
5. FOR ANCHOR SEE DETAIL.
6. FOR CENTER SUPPORT ASSEMBLY. SEE DWG 2215.

CONSTRUCTION NOTES:

A. GUTTER TRANSITION.
B. TOP OF CURB.
C. CENTER SUPPORT ASSEMBLY.
D. FLOWLINE.
E. CONSTRUCTION JOINT.
F. NORMAL GUTTER LINE.
G. 1"–10" MIN. UNLESS OTHERWISE DIRECTED.
H. FRAME AND GRATE.
J. INVERT OF OUTLET PIPE.
K. CONCRETE FILL MINIMUM SLOPES AS SHOWN.
L. FOR STORM INLET DEPTHS GREATER THAN 4' INSTALL STD STEPS. SEE DWG. 2229, DOWNSTREAM FACE.
M. EXTEND NO. 4 REBARS 18" INTO CURB ON EACH SIDE OF STORM INLET.
N. NO. 4 BARS AT 6" O.C.
P. 3 1/2" X 3 1/2" X 1/2" X 4'–0" FOR SINGLE GRATE TYPE "C" STORM INLET.
Q. 3 1/2" X 3 1/2" X 1/2" X 7'–6" FOR DOUBLE GRATE TYPE "C" STORM INLET.
R. ANCHOR.

DRAINAGE
STORM INLET TYPE "C"
DWG. 2205

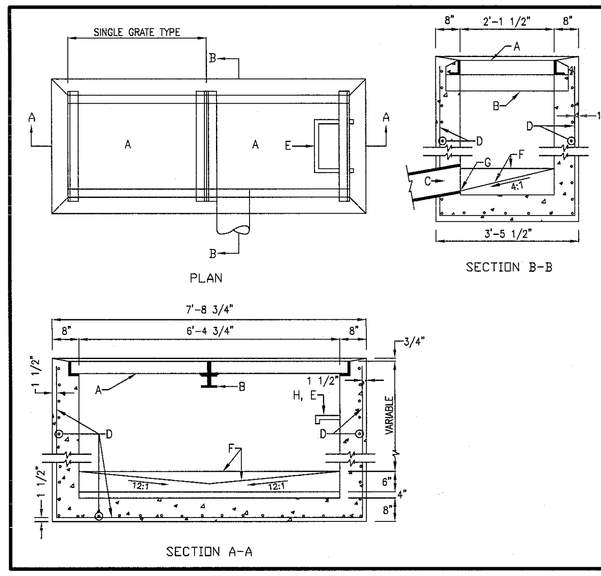

GENERAL NOTES:

1. FOR SINGLE GRATE TYPE STORM INLET DELETE CENTER SUPPORT AND MOVE ONE END WALL TO FORM NEW SINGLE GRATE INLET.
2. STORM INLET GUTTER TRANSITION WILL BE SHOWN ON THE CONSTRUCTION PLANS.
3. OUTLET PIPE SIZE. PER DESIGN REQUIREMENT.
4. FOR FRAME & GRATING, SEE DWGS. 2216, 2220 & 2221.
5. FOR CENTER SUPPORT ASSEMBLY. SEE DWG 2215.

CONSTRUCTION NOTES:

A. FRAME & GRATE
B. CENTER SUPPORT ASSEMBLY.
C. CUT ONE HORIZONTAL AND ONE VERTICAL BAR MAX. AT PIPE OPENING.
D. NO. 4 BARS AT 6" O.C. EACH WAY.
E. USE STANDARD STEPS. SEE DWG. 2229.
F. CONC. FILL. SEE NOTE C DWG. 2201.
G. INVERT PER DESIGN. H. INSTALL STEPS ON DOWNSTREAM FACE.

DRAINAGE
STORM INLET DOUBLE "D"
DWG. 2206

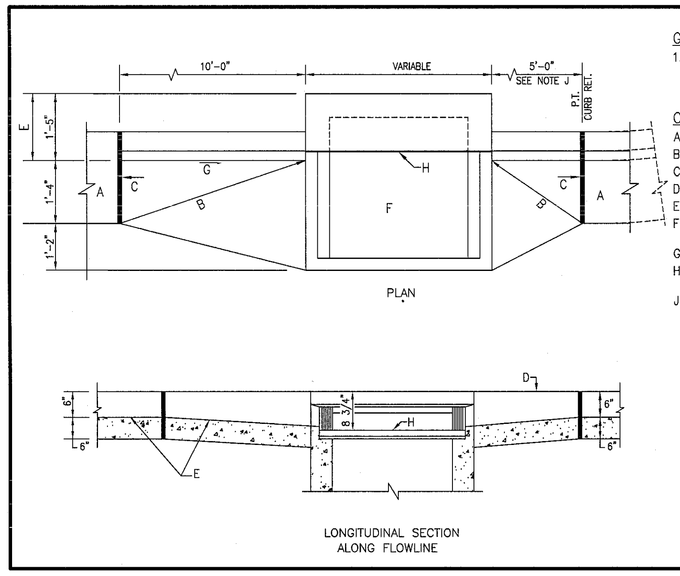

GENERAL NOTES:

1. DETAILS FOR PLACING CATCH BASINS, STANDARD CURB AND GUTTER.

CONSTRUCTION NOTES:

A. STANDARD CURB AND GUTTER
B. STRAIGHT GRADE.
C. EXPANSION JOINT.
D. TOP OF CURB.
E. FLOWLINE.
F. FOR FRAME & GRATE SEE DWGS. 2216 & 2220.
G. DIRECTION OF FLOW.
H. POINT OF MEASUREMENT FOR TOP OF GRATE ELEVATION.
J. PROVIDE 10 FEET TRANSITION EACH SIDE OF CATCH BASIN, WHEN INSTALLING AT SAG POINT IN INSTALLATIONS OTHER THAN AT CURB RETURN.

DRAINAGE
STORM INLET
GUTTER TRANSITION
DWG. 2207

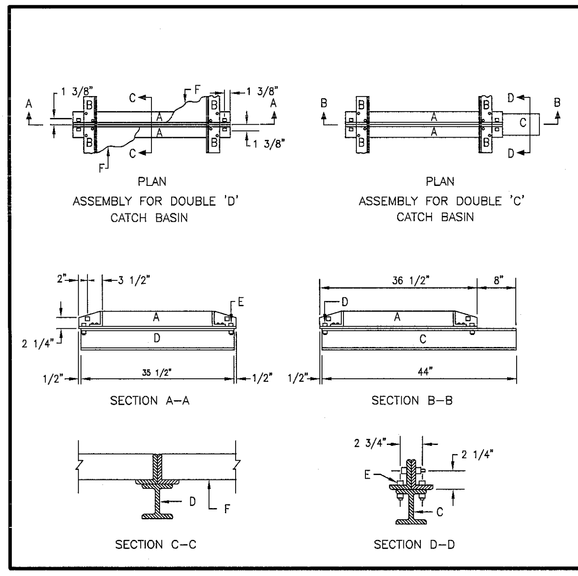

GENERAL NOTES:

1. ALL BOLTS USED IN CENTER SUPPORT ASSEMBLY SHALL BE 1/2".
2. FRAME MAY BE RIVETED OR WELDED.
3. BOLTS (NOT RIVETS OR WELDS) SHALL BE USED TO JOIN TWO OR MORE FRAMES TOGETHER AND TO THE WF BEAM.
4. AFTER CLEANING SURFACE OF SCALE, RUST, ETC., GRATING, FRAME AND CENTER SUPPORT SHALL BE PAINTED WITH ONE SHOP COAT RED OXIDE, TWO FINISH COATS ALUMINUM PAINT (AASHTO M 69).
5. FOR SINGLE TYPE CATCH BASIN, MOVE ONE END WALL TO FROM NEW SINGLE GRATE CATCH BASIN.

CONSTRUCTION NOTES:

A. 4" X 3" X 1/2" X 36 1/2" ∠.
B. 3 1/2" X 3" X 3/8" X 40 3/8" ∠.
C. 5 X 5 WF 18.5 FLANGE BEAM, FOR CATCH BASIN TYPE DOUBLE 'C'.
D. 5 X 5 WF 18.5 FLANGE BEAM, FOR CATCH BASIN TYPE DOUBLE 'D'.
E. 1/2" BOLTS, WITH NUTS TO SECURE ANGLE TO BEAM.
F. FOR FRAME AND GRATE SEE DWGS. 2216 & 2220.

DRAINAGE
STORM INLET CENTER SUPPORT ASSEMBLY
DWG. 2215

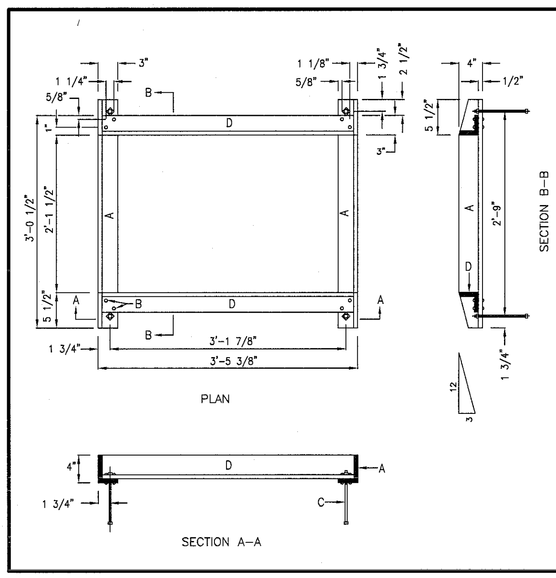

GENERAL NOTES:

1. ALL EXPOSED METAL PARTS SHALL BE PAINTED PRIOR TO ASSEMBLY. WELDING, MACHINING AND DRILLING SHALL BE DONE PRIOR TO PAINTING. ALL DIMENSIONS ARE FINISHED DIMENSIONS.
2. ALL PARTS SHALL BE OF STRUCTURAL STEEL, GRADE 36.
3. AFTER CLEANING SURFACE OF SCALE, RUST, ETC., GRATING AND FRAME SHALL BE PAINTED WITH ONE SHOP COAT RED OXIDE, TWO FINISH COATS ALUMINUM PAINT (AASHTO M 69).
4. FRAME MAY BE WELDED OR RIVETED.

CONSTRUCTION NOTES:

A. 4" X 3" X 1/2" X 3'– 1/2" ∠.
B. 2 – 3/8" RIVETS AT EACH CORNER, SEE GENERAL NOTE NO. 5.
C. 4 – 1/2" X 8" BOLTS WITH SQUARE HEAD & NUT AT EACH CORNER FOR ANCHORING FRAME INTO CONCRETE WALL.
D. 3 – 1/2" X 3" X 3/8" X 3'– 4 – 3/8" ∠.

DRAINAGE
STORM INLET FRAME
DWG. 2216

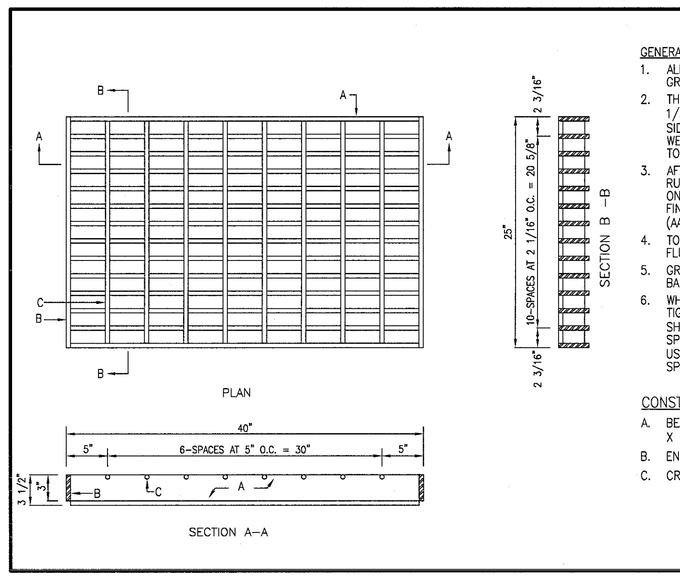

GENERAL NOTES:

1. ALL BARS SHALL BE STRUCTURAL GRADE STEEL, GRADE A36.
2. THE GRATE SHALL BE WELDED WITH 1/8" FILLET WELD AROUND BOTH SIDES OF CROSS BARS. 1/4" FILLET WELD BOTH SIDES OF BEARING BARS TO END BARS.
3. AFTER CLEANING SURFACE OF SCALE, RUST, OILS, ETC., PAINT GRATE WITH ONE SHOP COAT RED OXIDE, TWO FINISH COATS OF ALUMINUM PAINT (AASHTO M 69).
4. TOP OF CROSS BARS SHALL BE FLUSH WITH TOP OF GRATE.
5. GRIND WELDS FLUSH WITH BEARING BARS.
6. WHEN INSTALLED IN FRAME, PUSH TIGHT TO ONE SIDE. OTHER SIDE SHALL HAVE 1/2" MAX. OPENING. SPACERS WELDED TO FRAME MAY BE USED IF REQUIRED TO KEEP 1/2" SPACE OR LESS.

CONSTRUCTION NOTES:

A. BEARING BARS. (13) 1/2" X 3 1/2" X 39".
B. END BARS (2) 1/2" X 3" X 25".
C. CROSS BARS, (7) 1/2" DIA. X 24.

DRAINAGE
STORM INLET
DWG. 2220

ARCHITECTURE / DESIGN / INSPIRATION

DEKKER PERICH SABATINI

7601 JEFFERSON NE, SUITE 100
ALBUQUERQUE, NM 87109

505.761.9700 / DPSDESIGN.ORG

ARCHITECT

ENGINEER

J. GRAEME MEANS NEW MEXICO 13676 REGISTERED PROFESSIONAL ENGINEER
6/25/2014

PROJECT

DEL NORTE HIGH SCHOOL
5323 MONTGOMERY NE
ALBUQUERQUE, NM

CAFETERIA BUILDING

REVISIONS

DRAWN BY	J.Y.R.
REVIEWED BY	G.M.
DATE	07-01-2014
PROJECT NO.	08-0041
DRAWING NAME	

STORM INLET SECTIONS AND DETAILS

SHEET NO.

CG-301

OF

HIGH MESA Consulting Group
6010-B MIDWAY PARK BLVD. NE • ALBUQUERQUE, NEW MEXICO 87109
PHONE: 505.345.4250 • FAX: 505.345.4254 • www.highmesacg.com
2010.048.1

File Path:P:\2010\2048.1\DWG\CAFE\ | Plot Date: 06-19-2014
File Name:100481_CG-301.DWG | Plot Time: 10:10 am