HYDROLOGY

F21/D19

FAITH LUTHERAN
CHURCH

F21 – D19

1 PLAN

BOHANNAN-HUSTON INC.
4125 CARLISLE BLVD., N.E. ALBUQUERQUE, NEW MEXICO 87107 505 881-2000

Andrew Bol
296-4886

July 10, 1978

Mr. Hildreth Barker
Barker, Bol and Associates
8338-B Comanche Road, N.E.
Albuquerque, NM 87110

FAITH LUTHERAN CHURCH.

RE: El Oso Grande Master Drainage Plate

Dear Mr. Barker:

Enclosed is a copy of the El Oso Grande Master Drainage Plate which shows that the proposed church expansion is included in the master drainage plan.

All runoff will flow to a central ponding park where it will be released at a controlled rate to the Bear Canyon Arroyo.

Once approval is received for the master drainage plan, the church expansion may proceed without on-site drainage controls.

If you have any questions concerning these matters, please feel free to contact me at this office.

Sincerely,

Michial M. Emery

Michial M. Emery
Vice President

Enclosure

DCH/kb
Job No. 77-223

BOHANNAN-HUSTON INC.
4125 CARLISLE BLVD., N.E. ALBUQUERQUE, NEW MEXICO 87107 505 881-2000

ENGINEERS PLANNERS PHOTOGRAMMETRISTS

F21-D19

October 11, 1978

RECEIVED
OCT 13 1978
CITY ENGINEERS

Mr. Bruno Conegliano
City Hydrologist
City of Albuquerque
P.O. Box 1293
Albuquerque, NM 87103

Re: Drainage Report for Faith Lutheran Church

Dear Mr. Conegliano:

On October 10, 1978 you approved the Drainage Report for Faith Lutheran Church, subject to receipt of a detail sheet of the drain pipe (in the event that Option 1 is utilized). Option 2 is the preferred solution and will be implemented upon execution of a signed agreement between Home Planning Development Company, Inc. and the Faith Lutheran Church. A copy of this agreement will be forwarded to you upon execution. Please sign this letter as approval of the subject Drainage Report and return the original to this office for our records.

If you have any questions regarding this, please feel free to contact me.

Sincerely yours,

Michial M. Emery

Michial M. Emery, P.E.
Vice President

APPROVED

BY _____

DATE _____

Enclosure

cc: Mr. Erwin F. Hensch
Mr. Rip Orr

MME/js
Job No. 78-162

FAITH LUTHERAN CHURCH
10,000 SPAIN ROAD N.E.
ALBUQUERQUE, NEW MEXICO 87111

+21-D19

October 15, 1980

Mr. Fred J. Aguirre, P. E.
Civil Engineer
City of Albuquerque
Post Office Box 1293
Albuquerque, New Mexico 87103

Dear Fred:

This letter is to confirm our telephone conversation of October 7, 1980, and to outline the current status of drainage and ponding structures at Faith Lutheran Church, 10,000 Spain Road N.E., Albuquerque.

First, let me reiterate that the construction of the drainage ponds was clearly excluded from See Gee Engineering's General Contract with the Church in both the drawings and specifications. The construction of these ponds is the sole responsibility of Faith Lutheran Church, and we hope that the construction schedule and details as outlined in this letter will result in a swift completion and final approval of the drainage on this site.

The original drainage plan was prepared by Bohannan-Huston Inc. in September 1978, and was based on the building addition and parking lot expansion envisioned at that point in time. Subsequently, rapidly rising costs forced us to pare down both the size and location of our building addition and parking lot expansion. The plans and specifications submitted to the City last year, reflected the relocation and resizing of the building addition, but not that of the parking lot. These plans, as approved, show two drainage ponds -- a major one located in the southwest of the property, and a minor sediment collection pond located in the northwest. In concept, our drainage plan still includes these ponds; however, we feel that some details need modification.

As part of our landscaping on the north side of the building, we have incorporated a dry river bed with small ponding areas. The largest of these ponds was moved to the east and lies directly west of the current driveway. This was done based on our observation that during major rainstorms the flow of water and mud on Spain Road over tops the curb at our driveway and causes severe erosion directly west of the driveway. It is hoped that this small pond in conjunction with a R.R. tie barrier structure designed to slow the water coming from Spain Road can prevent the erosion experienced in the past. In addition, we have expanded the grass cover north of the Church and have also provided a western style landscaping with numerous native plants which should further reduce run-off from this area.

The major pond in the southwest has yet to be constructed; however, the requirement for this pond is directly related to the expansion of our parking lot which has not been done and is currently being planned and bid. Since the construction of this pond will require heavy earthmoving equipment, it is only logical that it be constructed in conjunction with the parking lot paving project. The accompanying drawing shows the re-configuration of the parking lots.

FAITH LUTHERAN CHURCH
10,000 SPAIN ROAD N.E.
ALBUQUERQUE, NEW MEXICO 87111

Mr. Fred Aguirre - 2 October 15, 1980

Based on this parking lot plan, I have recalculated the developed run-off. The attached sheets show that a slightly smaller (4,000 Ft^3 against 5,800 Ft^3) pond will suffice to control the run-off. The shape of the pond will also change to conform with this existing topography. Plate I of the drainage report, which must have been prepared from an aerial photograph, very accurately reflects the existing topography and I have used it to determine the shape of the pond. Sketch I shows the pond which is currently planned. You will note it is much broader than that depicted on Drawing C1. It's capacity is approximately 3,700 Ft^3 for a 2' depth and 12,000 Cu. Ft. for a 4' depth. The dam forming the pond will be 4 Ft. high and 18 Ft. wide at its base.

Given this dam shape, it appears that a 21" diameter x 20 Ft. long corrugated-metal pipe culvert should be used as a discharge pipe. This culvert should limit the discharge to less than 19.75 Ct. Ft. as shown on the accompanying nomographs.

We anticipate that by the end of October we will award the contract for the earth-moving and paving and would anticipate that construction should be completed by the end of November.

Sincerely,

Karl W Schuler

Karl W. Schuler 844-7496 work
Property Division 821 8944 home
Faith Lutheran Church

KWS/lks
Attachment

cc: Barker-Bols Architects
See Gee Engineering

WOOD BROS.
HOMES

March 24, 1982

Mr. Charles M. Easterling
Assistant City Engineer
City of Albuquerque
Post Office Box 1293
Albuquerque, NM 87103

Dear Mr. Easterling:

Subject: Oso Grande and Drainage
from Faith Lutheran Church

You approved the Oso Grande drainage report in a letter dated October 22, 1981. This report shows full urbanized unretarded flows from Faith Lutheran Church across Tract E-2 of Oso Grande. The recorded subdivision plat (C19-53) shows drainage easements to insure these flows can cross the tracts. Attached is a page from an agreement between Faith Lutheran Church and Home Planning, which indicates that flows from the Church will be accepted by Tract E-2. The report and agreement show the flow quantity in the same magnitude. These drainage improvements will be made at the time Tract E-2 is developed and will be reviewed by you at the time the site development plan is submitted for that tract.

The ~~Oso Grande~~ ARROYO DEL OSO Dam has been completed, which allows fully urbanized flows from its watershed. The drainage report, plat, agreement, and dam should allow the removal of the detention pond constructed, when Faith Lutheran added to their building. POND IN SOUTHWEST CORNER OF PARCEL ONLY CME

Bohannan-Huston is currently preparing a grading plan for Grupe's Oso Grande Tract D, which should be submitted to you this week. This grading plan will barrow material from Tracts E-2, E-1, and F, west of the Church, and will remove hills on common boundaries with the Church. While grading modifications are being made, the Faith Lutheran Church would like to remove the detention pond and modify the area occupied by the pond. If you concur that the pond can be removed, please sign below and return copies to Pastor Lee and me.

Sincerely,

Kleston H. Laws

Kleston H. Laws
Land Development Manager
New Mexico Division

Approved by Charles M. Easterling
Charles M. Easterling Date

cc: Pastor Russell Lee - Faith Lutheran Church
David R. Kochert - Grupe Construction
Michial M. Emery - Bohannan - Huston
Sheilah Sweenhart - AMDeC
Kent Whitman - Community Sciences Corporation

P.O. Box [illegible] New Mexico 87191 505 881-1804

ATTACHMENT B

PAGE 2

It is agreed and understood that Home Planning, Inc. will, at their expense, and with no recourse to Faith Lutheran Church, construct a six foot (6') masonry fence along the newly established eastern borders of Faith Lutheran Church's property, Fence to be built on Home Planning's property at the land elevation determined by the development of said property. Fence is designated and shown on attached property diagram.

The fence is to be built at the time that said adjacent property is developed. If Home Planning, Inc. should decide to sell this property and not develop it, they shall be responsible to Faith Lutheran Church to see that the new purchaser, or any subsequent purchaser, build the required fence according to the terms and conditions required of Home Planning, Inc. by Faith Lutheran Church.

That Home Planning, Inc. will provide a 25' wide sewer, drainage, and sidewalk easement through the adjoining property to facilitate the church's need for drainage, sewer, and access. If Home Planning, Inc. should decide to sell this property and not develop it, they shall be responsible to Faith Lutheran Church to see that the new purchaser, or any subsequent purchaser, provide the required easement according to the terms and conditions required of Home Planning, Inc. by Faith Lutheran Church.

That Home Planning, Inc. will locate the easement for the property and build the drainage ditch according to the recommendations and specifications placed in a report to Faith Lutheran Church by a civil engineer hired by, and on behalf of, Faith Lutheran Church. These recommendations and specifications are as follows:

1. The drainage ditch shall be built to accept a flow rate of 40 cubic feet per second, and construction of velocity reduction devices shall not affect flow rate.

2. The church will be allowed to see and approve design cacu-lations and construction drawings prior to any submissions to the city for the sewer, drainage and sidewalk easement.

3. The 25' easement will be built at the southwest corner of the Faith Lutheran Church property.

4. That Home Planning will provide an 8" sewer connection and manhole at a point in the street that would align itself with the sewer line easement.

WRC

DRAINAGE REPORT

FOR

FAITH LUTHERAN CHURCH

Zone Atlas Sheet F-21-Z

SEPTEMBER, 1978

DRAINAGE REPORT

FOR

FAITH LUTHERAN CHURCH

Zone Atlas Sheet F-21-Z

PREPARED FOR

BARKER, BOL AND ASSOCIATES
8338-B Comanche Road, N.E.
Albuquerque, New Mexico 87110

PREPARED BY

BOHANNAN-HUSTON, INC.
4125 Carlisle Blvd., N.E.
Albuquerque, New Mexico 87107

STATE OF NEW MEXICO
MICHIAL M.
EMERY
No. 5194
REGISTERED PROFESSIONAL ENGINEER

STATE OF NEW MEXICO
MICHIAL M.
EMERY
No. 5194
REGISTERED PROFESSIONAL ENGINEER

Michial M. Emery

Michial M. Emery, P.E.
N.M.P.E. No. 5194

TABLE OF CONTENTS

PURPOSE 1

PROJECT LOCATION & DESCRIPTION 1

EXISTING DRAINAGE 1

FULLY DEVELOPED CONDITIONS 2

DRAINAGE CONTROL OPTIONS 2

RECOMMENDATIONS 3

CONCLUSIONS 4

APPENDIX

A. COMPUTATIONS

B. FAITH LUTHERAN CHURCH AND HOME PLANNING DEVELOPMENT COMPANY INC., SITE IMPROVEMENT AGREEMENT

PLATES

PLATE 1 ..... LOCATION MAP AND EXISTING DRAINAGE

PLATE 2 ..... FULLY DEVELOPED DRAINAGE

PLATE 3 ..... SITE PLAN AND PROPOSED DRAINAGE, OPTION 1

PLATE 4 ..... SITE PLAN AND PROPOSED DRAINAGE, OPTION 2

DRAINAGE REPORT

FOR

FAITH LUTHERAN CHURCH

PURPOSE

The purpose of this report is to examine the existing and the expansion areas for the Faith Lutheran Church and to provide three alternate proposals for controlling the 100-year frequency storm runoff from the developed parcel. (See Plate 1 for exact location.)

PROJECT LOCATION AND DESCRIPTION

Faith Lutheran Church is bordered on the north side by Spain Road and is east of Eubank Boulevard. It is bordered on the south, east, and west by undeveloped land. The site encompasses 8.43 acres, more or less. The parcel slopes from east to west at approximately 3.0 percent. Soils consist of decomposed granite sandy alluvium. Vegetation consists of sparse amounts of native grasses and brush. The proposed development consists of an expansion of the church building and parking areas. This will increase the developed area from 1.87 acres to 3.39 acres.

EXISTING DRAINAGE

The offsite and onsite drainage areas can be divided into five basins. The existing runoff rates for each basin are shown on Plate 1. Basins 1 and 2 flow through the property on the south side and eventually flow into the Bear Canyon Arroyo. The offsite Basin number 3 flows into Basin 4 from the east. Flow then crosses the property through Basin 4 and is collected by a small channel west of the parcel boundary, which also flows into the Bear Canyon Arroyo. Basin 5 flows along the north edge of the site

and is eventually collected offsite by Eubank Boulevard and thence to the Bear Canyon Arroyo.

FULLY DEVELOPED CONDITIONS

The 100-year, 6 hour rainfall event, storm runoff rates are shown on Plate 2, for the fully developed site. The additional 1.52 acres of development includes 1.2 acres of pavement and .32 acres of building and sidewalk expansion. (See Plate 2). Basin 1 is unaffected by the proposed development. It will remain in an undeveloped condition and the flowpath will not be altered. The changes in flow rate occur in Basins 2, 4, and 5.

DRAINAGE CONTROL OPTIONS

Three methods of flow rate control were analyzed with respect to this site. The first option is to use a controlled discharge ponding area on the west boundary, which will maintain the existing flow rate. The second option is only to be used in conjunction with Option 3. It is to use a permanent ponding facility which retains the flow rate resulting from development. The third option is to use the Central Park Solution proposed by Home Planning Development Company, Inc. in the Master Drainage Plan for El Oso Grande to collect and control the site drainage. Option 2 would be used as an interim drainage solution until the Central Park drainage facility is completed and then the ponding area would be abandoned. Utilization of Option 2 and 3 is contingent upon the church and Home Planning Development Co., Inc. reaching a suitable agreement. See Appendix B.

The Rational Formula and Modified Rational Formula were used to analyze Option 1. The existing flow rate with 1.87 acres of development is 21.08 cfs for the entire site. The additional development of 1.52 acres will increase the flow rate to 26.39

cfs for the entire site. The flow from Basin 2 must be diverted to the ponding area. The developed flow rate of 1.96 cfs, from Basin 5, will continue to drain to the west, thence to Spain Road. **Thus, the allowed discharge rate from the pond is 16.25 cfs and the required storage volume is 7542 ft^3 or .173 acre-feet.** Utilizing the pond as shown on Plate 3, the depth of runoff for the 100-year storm would be 4.93 feet with a freeboard of 1.07 feet. A 24" cmp culvert, 60 feet long (as shown on Plate 3), and screened to prevent clogging by trash and debris would be required to discharge the flow at the prescribed rate.

For Option 2, the total permanent ponding volume required is 38,115 ft^3 or 0.88 acre-feet. At the southwest corner of the parcel, a pond with the volume required can be built. See Plate 4 for the approximate location of this proposed ponding facility. This option would only be utilized as an interim solution until Option 3 could be implemented.

Option 3 would include the abandonment of the ponding facility described in Option 2 and implementation of the Central Park solution for the entire El Oso Grande Area.

RECOMMENDATIONS

For Option 1:

1. Divert flow from the ridge line adjacent to the building additions and south edges of the parcel into the ponding area. See flow paths on Plate 3.

2. Provide the ponding area as shown on the Site Plan (Plate 3) with a 30" cmp screened culvert, 60 feet long.

3. Use tied wire riprap to stabilize side slopes of the pond in case of an overflow.

4. Provide a regular maintenance program to remove trash and debris from the culvert entrance.

For Option 2:

1. Provide the ponding area as shown on Plate 4.

For Option 3:

1. Implement Option 2.

2. Abandon ponding area when the Central Park Solution is complete.

CONCLUSIONS

Either Option 1 or 3 (with Option 2 as an interim solution) will control the additional flow rates created by the proposed expansions to existing conditions. Offsite drainage will not flood the parcel, nor will the site cause flooding on downstream properties. Option 3 is the preferred method of control, but is contingent upon agreement between the church and Home Planning Development Co. Inc. If such an agreement cannot be reached, Option 1 will be implemented.

APPENDIX A

CALCULATIONS

Area in 8 contour

6.86 (900) = 6174 ft² = .142 acres

Tc min	I in/hr	$Q_p = CIA$	$V_p = 60 T_c Q_p$	Discharge	Volume	Storage volume
10	5.40	28.82	17,292	16.25	9750	7542

7542 = .173 acre-feet

POND CAPACITY

For 4.8' depth

$(.101 + .069)\frac{1}{2}(.8) + .094 = .162$

For 4.9' depth

$(.101 + .069)\frac{1}{2}(.9) + .094 = .171$

For 4.93' depth

$(.101 + .069)\frac{1}{2}(.93) + .094 = .173$ acre-ft

This leaves 1.07' of free board

DISCHARGE PIPE

Q = 16.25 cfs depth = 4.93'

Pond W.S. elev = 7.93'

Assume Pipe Invert 1' above channel = 2.0 ft

L = 60 ft

$S = \frac{1}{60} = .02$

Inlet control

Inlet head = 7.93 − 3.0 = 4.93'

PROJECT NAME Faith Lutheran Church SHEET 1 OF 2

PROJECT NO. 78-169 BY SSU DATE 10-10-78

SUBJECT Corrections CH'D DATE

Try $\frac{HW}{D} = 1.5 \Rightarrow$ Pipe Dia. = 24"

So $HW = 1.5\left(\frac{24}{12}\right) = 3.0$

Try $\frac{HW}{D} = 1.2 \Rightarrow$ Pipe Dia = 27"

So $HW = 1.2\left(\frac{27}{12}\right) = 2.7$

Try $\frac{HW}{D} = 2.0 \Rightarrow$ Pipe Dia = 21

So $HW = 2.0\left(\frac{21}{12}\right) = 3.50$

Try $\frac{HW}{D} = 2.3 \Rightarrow$ Pipe Dia = 21

So $HW = 2.3\left(\frac{21}{12}\right) = 4.03$

Try $\frac{HW}{D} = 3.0 \Rightarrow$ Pipe Dia = 18"

So $HW = 3.0\left(\frac{18}{12}\right) = 4.50$

Try $\frac{HW}{D} = 4.0 \Rightarrow$ Pipe Dia = 15"

So $HW = 4.0\left(\frac{15}{12}\right) = 5.0$

Screens

Use 18" pipe $A = \pi(.75)^2 = 1.77\ ft^2$

$Q = .61\sqrt{2(32.2)(4.93-.75)}\,(.75)(.86)\,A$

$16.25 = 6.46\,A$

$A = 2.52\ ft^2$

Use 21" pipe $A = \pi(.88^2) = 2.42\ ft^2$

Use 24" pipe $A = \pi(1^2) = 3.14\ ft^2$

So a 24" Dia pipe is required.

PROJECT NAME _____ SHEET 2 OF 2

PROJECT NO. _____ BY _____ DATE _____

SUBJECT _____ CH'D _____ DATE _____

THIS MICROIMAGE IS THE BEST POSSIBLE

SITE DETAILS

Parcel total Area = 8.43 acres more or less (367,173 ft²)

EXISTING CONDITIONS

Parking and Pavement = 60840 ft² = 1.40 ac
Bldg and sidewalks = 20331 ft² = .47 ac
Undeveloped = 8.43 − 1.87 = 6.56 ac

PROPOSED ADDITIONS

Parking and pavement = 52,205 = 1.20 ac
Bldg and sidewalks = 14,049 = .32 ac
Undeveloped = 8.43 − 1.87 − 1.52 = 5.04 ac

DRAINAGE DETAILS

The offsite and onsite Area can be divided into 5 Basins.

Basin #	Area ac	Flowpath Length	Slope	EXISTING Developed Area ac	To be Developed Area ac	Portion Onsite ac	Portion OFFSITE ac
1	3.91	969	3.98%	0.0	0.0	1.74	2.17
2	2.11	812	3.94%	0.0	.75	2.11	0.0
3	2.06	644	4.01%	0.0	0.0	0.0	2.06
4	3.82	819	4.27%	1.87	.58	3.82	0.0
5	.76	569	3.52%	0.0	.19	.76	0.0

RUNOFF CALCULATIONS

1. Use Rational Formula : $Q = CIA$

3. $T_c = \text{Log}^{-1}[.3641(B) + .3854 \text{ Log}(L) - .197 \text{ Log}(S) - .3613]$

L = Length of flow path (ft)
S = Slope in %
B = Ground factor: paved .77, poor grass = 1.04
T_c = time of concentration (min)

PROJECT NAME Lutheran Church Drainage Rpt SHEET 1 OF 13
PROJECT NO. 78-162 BY SEU DATE 9-6-78
SUBJECT CH'D DATE

OPTION 1

Analyze Runoff for existing conditions and use controlled discharge from ponding site to retain excess runoff developed by proposed additions.

EXISING CONDITIONS

Basin 1 (undeveloped)

A = 3.91 ac B = 1.84

L = 969 C = .40

S = 3.98

$T_c = \text{Log}^{-1}(.3641(1.84) + .3854\text{Log}(969) - .197\text{Log}(3.98) - .3613)$

$= \text{Log}^{-1}(.6699 + 1.1509 - .1182 - .3613)$

$= \text{Log}^{-1}(1.4595) = 28.81$ min

$I = \frac{189}{t_c + 25} = \frac{189}{28.81 + 25} = 3.51$ in/hr

$Q = CIA = .40(3.51)(3.91) = 5.49$ cfs

Basin 2 (Undeveloped)

A = 2.11 B = 1.84

L = 812 C = .40

S = 3.94

$T_c = \text{Log}^{-1}(.6699 + .3854\text{Log}(812) - .197\text{Log}(3.94) - .3613)$

$= \text{Log}^{-1}(.3086 + 1.1213 - .1173)$

$= \text{Log}^{-1}(1.3126) = 20.54$ min

$I = \frac{189}{20.54 + 25} = 4.15$ in/hr

$Q = CIA = .40(4.15)(2.11) = 3.50$ cfs

Basin 3 (Undeveloped)

A = 2.06 B = 184 C = .40

L = 644

S = 4.01

$T_c = \text{Log}^{-1}(.3086 + .3854\text{Log}(644) - .197\text{Log}(4.01))$

$= \text{Log}^{-1}(.3086 + 1.0825 - .1188)$

$= \text{Log}^{-1}(1.2723) = 18.72$ min

$I = 189/25 + 18.72 = 4.32$ in/hr

$Q = .40(4.32)(2.06) = 3.56$ cfs

Basin 4

A = 3.82 $\quad B = \frac{.77(1.87) + 1.84(1.95)}{3.82} = 1.32$

L = 819

S = 4.27 $\quad C = \frac{.95(1.87) + .40(1.95)}{3.82} = .67$

$T_c = \text{Log}^{-1}(.3641(1.32) + .3854 \text{Log}(819) - .197 \text{Log}(4.27) - .3613)$

$= \text{Log}^{-1}(.4806 + 1.1228 - .1242 - .3613)$

$= \text{Log}^{-1}(1.1179) = 13.12$ min

$I = \frac{189}{13.12 + 25} = 4.96$ in/hr

$Q = .67(4.96)(3.82) = 12.69$ cfs

Basin 5 (Undeveloped)

A = .76 $\quad B = 1.84$

L = 569 $\quad C = .40$

S = 3.52

$T_c = \text{Log}^{-1}(.3086 + .3854 \text{Log}(569) - .197 \text{Log}(3.52))$

$= \text{Log}^{-1}(.3086 + 1.0618 - .1077)$

$= \text{Log}^{-1}(1.2627) = 18.31$ min.

$I = \frac{189}{25 + 18.31} = 4.36$ in/hr

$Q = .40(4.36)(.76) = 1.33$ cfs

* Total $Q_{existing} = 5.49 + 3.50 + 3.56 + 12.69 + 1.33 = \boxed{26.57 \text{ cfs}}$

FULLY DEVELOPED CONDITIONS

Only Basins 2, 4, and 5 will be affected

Basin 2

A = 2.11 $\quad B = \frac{.77(.75) + 1.84(1.36)}{2.11} = 1.46$

L = 812

S = 3.94 $\quad C = \frac{.95(.75) + .40(1.36)}{2.11} = .60$

$T_c = \text{Log}^{-1}(.3641(1.46) + .1213 - .1173 - .3613)$

$= \text{Log}^{-1}(.5316 + .1213 - .1173 - .3613) = \text{Log}^{-1}(1.1743) = 14.94$ min

PROJECT NAME _____ SHEET 3 OF 13

PROJECT NO. _____ BY _____ DATE _____

SUBJECT _____ CH'D _____ DATE _____

$I = \frac{189}{25+14.94} = 4.73$ in/hr

$Q = CIA = .60(4.73)(2.11) = 5.99$ cfs

Basin 4

A = 3.82
L = 819
S = 4.27

$B = \frac{.77(2.45) + 1.84(1.37)}{3.82} = 1.15$

$C = \frac{.40(1.37) + .95(2.45)}{3.82} = .75$

$T_c = \text{Log}^{-1}(.3641(1.15) + 1.1228 - .1242 - .3613)$
$= \text{Log}^{-1}(.4187 + .6373) = \text{Log}^{-1}(1.0560) = 11.38$ min

$I = \frac{189}{25+11.38} = 5.195$ in/hr

$Q = .75(5.195)(3.82) = 14.88$ cfs

Basin 5

A = .76
L = 569
S = 3.52%

$B = \frac{.77(.19) + 1.84(.57)}{.76} = 1.57$

$C = \frac{.95(.19) + .40(.57)}{.76} = .54$

$T_c = \text{Log}^{-1}(.3641(1.57) + 1.0618 - .1077 - .3613)$
$= \text{Log}^{-1}(.5716 + .5928) = \text{Log}^{-1}(1.1644) = 14.60$ min

$I = \frac{189}{25+14.6} = 4.77$ in/hr

$Q = .54(4.77)(.76) = 1.96$ cfs

* Total $Q_{DEVELOPED} = 5.49 + 5.99 + 3.56 + 14.88 + 1.96 = \boxed{31.88 \text{ cfs}}$

PROJECT NAME _____ SHEET 4 OF 13
PROJECT NO. _____ BY _____ DATE _____
SUBJECT _____ CH'D _____ DATE _____

THIS MICROIMAGE IS THE BEST POSSIBLE REPRODUCTION DUE TO THE POOR QUALITY OF THE ORIGINAL DOCUMENT

PONDING

To determine the volume of ponding required for the 100-yr storm developed runoff, the Modified Rational Pooling Method is used, with the existing runoff rate being used as the pond discharge rate. The pond proposed is in Basin 4.

Basin 1 is presently undeveloped and will remain so. It is not affected by the development and will not be considered in future calculations. It is assumed Basin 2 is essentially diverted to the ponding area.

Therefore total discharge rate = 26.57 - 5.49 = 21.08 cfs

Developed Runoff = 31.88 - 5.49 = 26.39 cfs

Pond Sizing

Total Area = 8.75 acres

Existing Runoff = 21.08 cfs - 1.96 (Basin 5) = 19.12 cfs

Fully Developed Runoff = 26.39 cfs

Developed $C = \frac{.95(3.39) + .40(8.75 - 3.39)}{8.75} = .61$

STORM DURATION	STORM INTENSITY	RUNOFF RATE	RUNOFF VOLUME	DISCHARGE RATE	DISCHARGE VOLUME	STORAGE VOLUME
Tc (min)	$I = \frac{157}{Tc+25}$	$Q_r = CIA$	$V_r = 60 Tc Q_r$	Q_D (cfs)	$V_D = 60 Tc Q_D$	$V_S = V_r - V_D$
10	5.40	28.62	17,292.0	19.12	11,472	5820.0 ← max
15	4.73	25.25	22,725.0	19.12	17,208	5517.0
20	4.20	22.42	26,904.0	19.12	22,944	3960.0
25	3.78	20.18	30,270.0	19.12	28,680	1590.0
30	3.44	18.36	33,048.0	19.12	34,416	–
35	3.15	16.81	35,301.0	19.12	40,152	–
40	2.91	15.53	37,272.0	19.12	45,888	–

5820.0 ft^3 = .13 acre-feet

PROJECT NAME _____ SHEET 5 OF 13

PROJECT NO. _____ BY _____ DATE _____

SUBJECT _____ CH'D _____ DATE _____

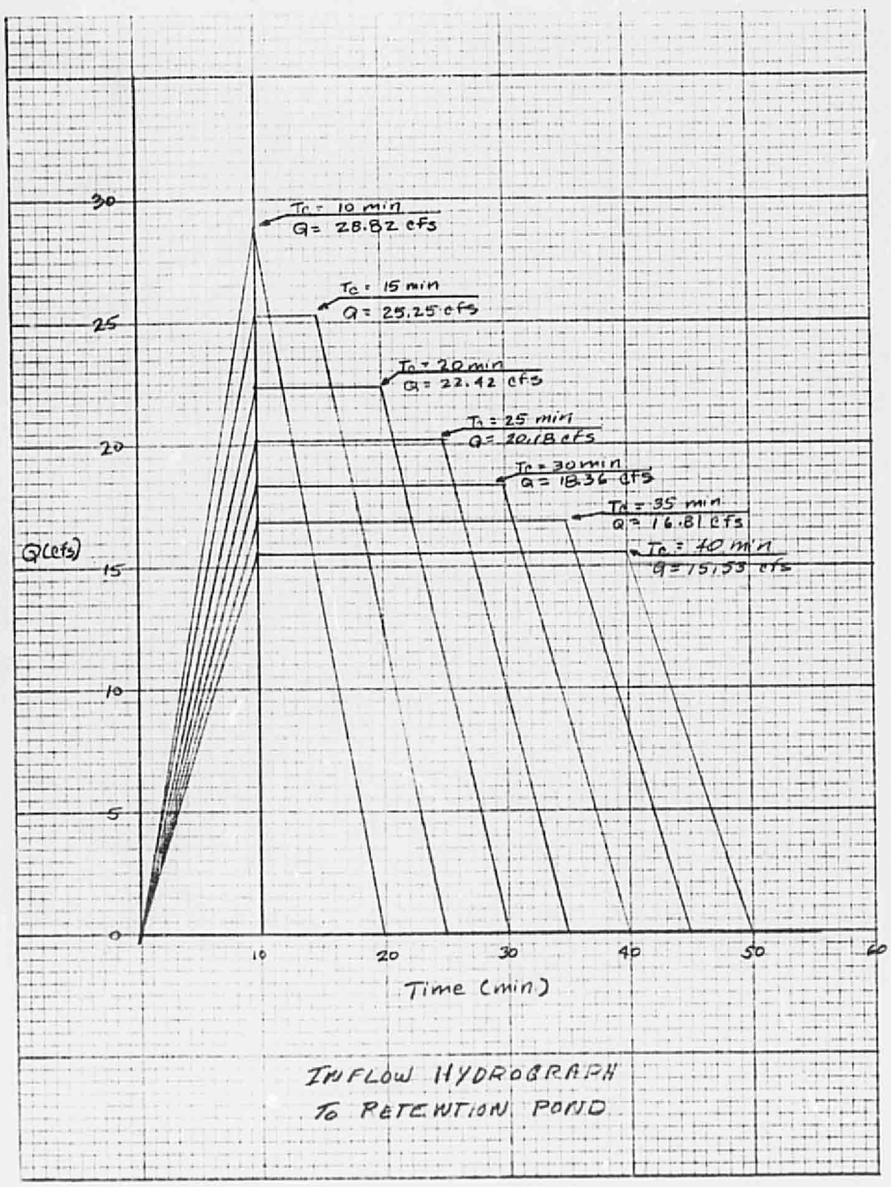

INFLOW HYDROGRAPH
TO RETENTION POND

PROJECT NAME		SHEET 6	OF 12
PROJECT NO.		BY	DATE
SUBJECT		CH'D	DATE

THIS MICROIMAGE IS THE BEST POSSIBLE REPRODUCTION DUE TO THE POOR QUALITY OF THE ORIGINAL DOCUMENT

POND CAPACITY

Area in 4 contour
.21 (900) = 189 ft^2 = .021 acres

Area in 5 contour
1.83 (900) = 1647 ft^2 = .038 acres

Area in 6 contour
3.32 (900) = 2988 ft^2 = .069 acres

Area in 7 contour
4.87 (900) = 4383 ft^2 = .101 acres

For 1' depth
1 (.021)(1/2) = .011 acre-ft

For 2' depth
(.038 + .021) 1/2 (1) + .011 = .041 acre-ft

For 3' depth
(.069 + .038) 1/2 (1) + .041 = .094 acre-ft

For 4' depth
(.101 + .069) 1/2 (1) + .094 = .179 acre-ft

For 3.4' depth
(.101 + .069) 1/2 (.4) + .094 = .128 acre-ft

Expected Depth of 100 yr storm pond accumulation is 5.4 feet. With Surface elevation is 3 + 3.4 = 6.4 ft

PROJECT NAME _____ SHEET 7 OF 12
PROJECT NO. _____ BY _____ DATE _____
SUBJECT _____ CH'D _____ DATE _____

DISCHARGE PIPE FROM POND

Q = 19.12 cfs depth = 3.4 feet

Pond water surface elev. = 6.4 feet

Assume worst case 4' water depth at discharge point so T.W elev = 5.0 ft

Assume pipe invert 1' above channel bottom = 2.0 ft

length = 60 feet

$S = \frac{1}{60} = .02$

Assume inlet Controlled outflow

Inlet head = 6.4 - 3.0 = 3.4 ft

Try $\frac{HW}{D} = 1.5 \Rightarrow$ Pipe Dia = 27" (from nomograph)

So $HW = 1.5\left(\frac{27}{12}\right) = 3.38$

Check Outlet Controlled Outflow

For a 27" pipe culvert, 60 ft long

$HW = H + h_o - LS_o$

H = head loss to friction (nomograph)

h_o = vertical distance from culvert invert at outlet to W.S. elev.

L = length

S = slope ft/ft

H = .90

$HW = .90 + (5-2) - 60\left(\frac{1}{60}\right) = 2.90$

Since 2.90 < 3.4 then inlet control governs

Pipe invert should be set at 3.0 and

PROJECT NAME _____ SHEET 8 OF 12

PROJECT NO. _____ BY _____ DATE _____

SUBJECT _____ CH'D _____ DATE _____

CHART 2

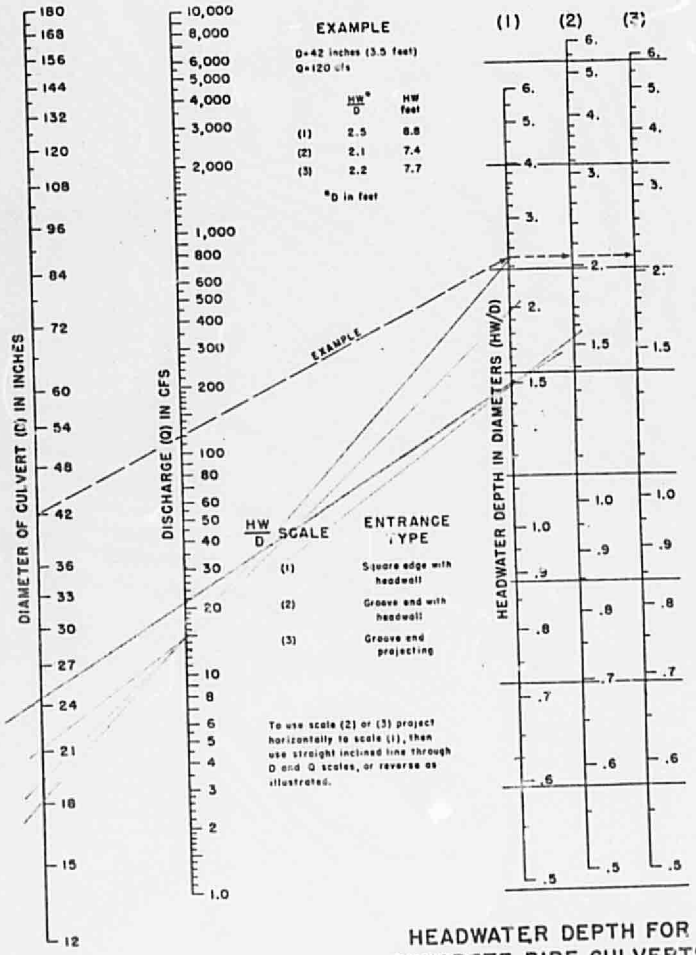

HEADWATER DEPTH FOR CONCRETE PIPE CULVERTS WITH INLET CONTROL

BUREAU OF PUBLIC ROADS JAN 1963

9/13

CHART 9

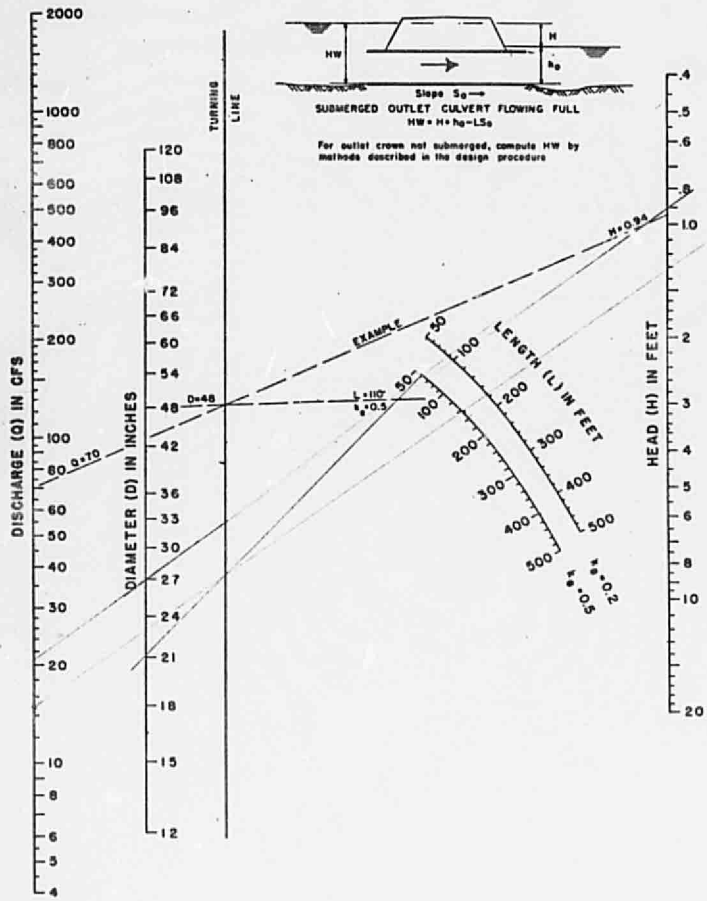

HEAD FOR
CONCRETE PIPE CULVERTS
FLOWING FULL
n = 0.012

BUREAU OF PUBLIC ROADS JAN. 1963

10/13

Culvert screens to collect trash and debris

Option 1

min. 27" pipe
Assume use of 30" pipe

$$Q = c\sqrt{2gh} \cdot Cf \cdot OF \cdot A$$

c = coefficient of opening
= .61 for sq. edge

g = 32.2
h = head to center of culvert =
Cf = clogging factor = .75 for wire screen
OF = open space factor = .86 for
1" wire mesh w/ 14 gauge wire (dia = .080")
screen
A = Area

$19.12 = .61\sqrt{64.4(3.4-1.25)}\,(.75)(.86)A$
$19.12 = 4.63\,A$
$A = 4.13\ ft^2$

30" Dia. $A = \frac{\pi(2.5)^2}{4} = 4.91$ sq ft

since 4.13 < 4.91 a 30" dia culvert with a screen will work

PROJECT NAME _____ SHEET 11 OF 13
PROJECT NO. _____ BY _____ DATE _____
SUBJECT _____ CH'D _____ DATE _____

OPTION 2

Permanent POND SOLUTION

Analyze runoff for totally undeveloped situation to retain all excess runoff generated as a result of development.

POND SIZING

Total Area = 8.8 ac.
Undeveloped Runoff = 14.72 cfs
Fully developed " = 26.39 cfs

Volume retention pond = .1 (A) = .1 (8.8)(43560) = 38115 ft^3
= .88 acre-feet

Volume in Basin 5
= .1 (.76)(43560) = 3311 ft^3
= .08 acre feet

Pond 1 V = .80 acre-ft = 34804 ft^3

Pond 2 V = .08 acre-ft

Total V = .88 acre-ft

Exposure Pond 1

Area for Pondage A = .046 acres
B = .085
C = .137
D = .188
E = .347
F = .312

PROJECT NAME Faith Lutheran Church SHEET 12 OF 12
PROJECT NO. 78-162 BY SCU DATE 9-18-78
SUBJECT Drainage Report Addendum CH'D DATE

for 1' depth $V = 1(.016)\,1/2 = .023$ cu-ft

2' $V = 1(.137 + .023)\,1/2 + .023 = .133$

3' $V = 1(.188 + .137)\,1/2 + .133 = .296$

4' $V = 1(.249 + .188)\,1/2 + .296 = .514$

5' $V = 1(.312 + .249)\,1/2 + .514 = .795$

so proposed form will work

PROJECT NAME _____ SHEET 13 OF 13

PROJECT NO. _____ BY _____ DATE _____

SUBJECT _____ CH'D _____ DATE _____

New Construction affects Basins 2, 4, 5

Basin 2 Developement affects .26ac with all of this area going to basin 4

A = 2.11 ac A_{new} = 1.85
L = 812
s = 3.94

$$B = \frac{.77(.26) + 1.84(1.85)}{2.11} = 1.84$$

$$c = \frac{.95(.26) + .40(1.85)}{2.11} = 0.40$$

$$T_c = \log^{-1}\left[.3641(1.71) + .3854\log(812) - .197\log(3.94) - .3613\right]$$

$$T_c = \log^{-1}\left[.6226 + 1.1213 - .1173 - .3613\right]$$

$$T_c = \log^{-1}\left[1.2653\right] = \underline{\underline{18.42 \text{ min}}} \quad 20.54$$

$$I = \frac{189}{25 + 20.54} = 4.15 \ \frac{in}{hr}$$

$$Q = CIA = 0.40\,(4.15)(1.85) = 3.07 \text{ cfs}$$

This represents a reduction from natural conditions however all of this runoff will be diverted to the retainage pond.

Basin 5 Developement affect .16ac with .11a being diverted to Basin 4

A = .76 ac A_{new} = .65ac
L = 569
S = 3.52

$$B = \frac{.77(.05) + 1.84(.60)}{.65} = 1.76$$

$$c = \frac{.95(.05) + .40(.60)}{.65} = .44$$

$$T_c = \log^{-1}\left[.3641(1.76) + .3854\log(569) - .197\log(3.52) - .3613\right]$$

$$= \log^{-1}\left[.6408 + 1.0618 - .1077 - .3613\right] = 17.1 \text{ min}$$

$$I = \frac{189}{25 + 17.1} = 4.48 \ \frac{in}{hr}$$

$$Q = CIA = 0.44\,(4.48)(.65) = 1.28 \text{ cfs}$$

prior to paving Q = 1.33 cfs

Basin 4 New Developement affects 0.79 a
Exist Developement has affected 1.87 a
Total affected 2.66 a
Area added .37 a all developed
3.03

A = 3.82 + .37 = 4.19 a
L = 819
S = 4.27

$$B = \frac{.77(3.03) + 1.84(1.16)}{4.19} = 1.066$$

$$C = \frac{.95(3.03) + .40(1.16)}{4.19} = 0.80$$

$$T_c = \log^{-1}\left[.3641(1.066) + .3854 \log(819) - .197 \log(4.27) - .3613\right]$$

$$= \log^{-1}\left[.3881 + 1.1228 - .1242 - .3613\right] = 10.60 \text{ min}$$

$$I = \frac{189}{25 + 10.6} = 5.31 \ \frac{in}{hr}$$

$$Q = CIA = .80(5.31)(4.19) = 17.79 \text{ cfs}$$

Undeveloped flow from Basin 4 to the West included 12.69 cfs from Basin 4, 3.56 cfs from Basin 3 and 3.50 cfs from basin 2 for a total of 19.75 cfs.
With the developement runoff from Basin 4 increases to 17.79 cfs ~~plus~~ but contributions from Basins 3 are the same at 3.56 cfs, and from Basin 2 the runoff decreases 3.07 cfs for a total of 24.42 cfs.

Pond Sizing

The pond will accept the runoff from Basin 4 (augmented by areas added to it from basins 5 and 2) Basin 2 and Basin 3.

Areas	Developed	Undisturbed	Total
Basin 4	3.03	1.16	4.19
Basin 3		2.06	2.06
Basin 2		1.85	1.85
	3.03	5.07	8.10

Calculate "C"

$$C = \frac{.95(3.03) + .40(5.07)}{8.10} = .61$$

$$Q = CIA = .61\,(8.10)\,I = 4.91\,I$$

STORM DURATION MIN	I in/hr	Q_I cfs	Vol IN $Q_I \cdot t \cdot 60$	Q_D	Vol out $Q_D \cdot t \cdot 60$	ΔV ft³
10	5.4	26.51	15,906	19.75	11,850	4056
15	4.73	23.22	20,898		17,775	3123
20	4.20	20.62	29,744		23,700	1044
25	3.78	18.56	27,840		29,625	
30	3.44	16.89	30,402		35,550	

Thus it appears that a pond of about 4000 cuft capacity will be required

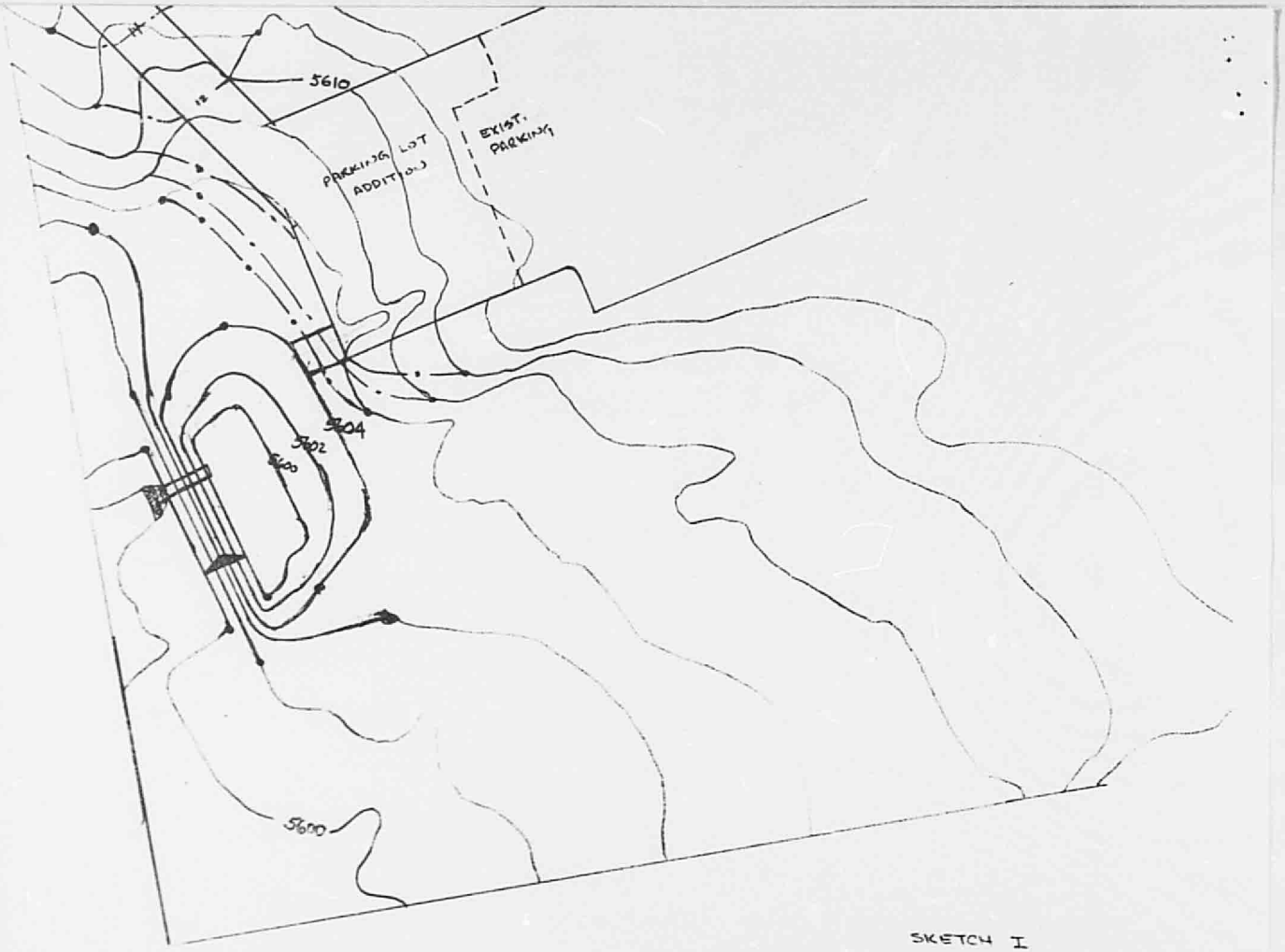

SKETCH I
10/13/90 KWS
SCALE 1" = 50'

Discharge Pipe

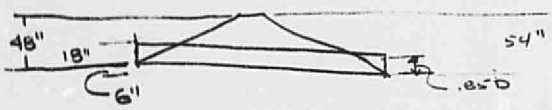

Maximum head 48" =

.85D = 15.3

H = 54 - 15.3

$\frac{38.7}{12} = 3.231$

for 18" diam $\frac{H}{D} = \frac{48}{18} = 2.67$

for projecting entrance (case 3)

Q = 15 cfs

for 21" diam

$\frac{H}{D} = \frac{48}{21} = 2.29$

.85D = 17.85

H = 54 - 17.85

$= \frac{36.15}{12} = 3.01$

Q = 17.5 cfs

for 24" diam

$\frac{H}{D} = \frac{48}{24} = 2.0$

Q = 22 cfs too high!

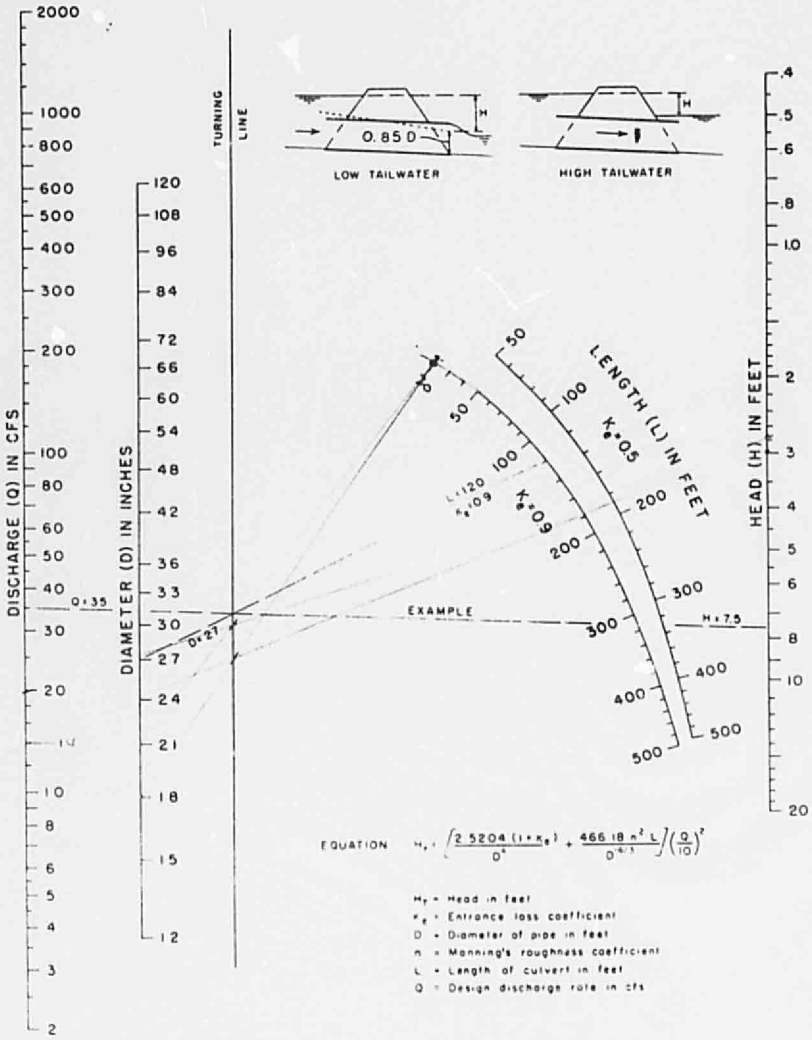

EQUATION $H_t = \left[\frac{2.5204\,(1+K_e)}{D^2} + \frac{466.18\,n^2\,L}{D^{4/3}}\right]\left(\frac{Q}{10}\right)^2$

H_t = Head in feet
K_e = Entrance loss coefficient
D = Diameter of pipe in feet
n = Manning's roughness coefficient
L = Length of culvert in feet
Q = Design discharge rate in cfs

Figure 8-11 Head for corrugated metal pipe culverts flowing full, n = 0.024. (U.S. Bureau of Public Roads.) 288-D-2911

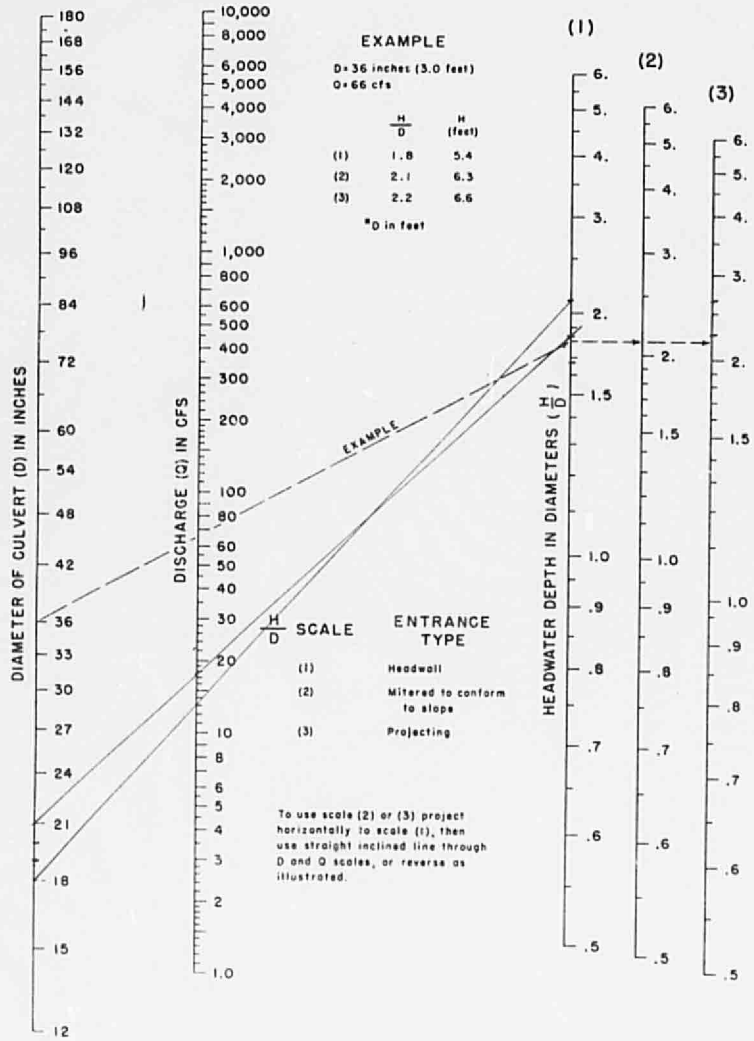

Figure 8-9 Headwater depth for corrugated-metal pipe culverts with entrance control (U.S. Bureau of Public Roads) 288-D-2904

10/10/80

A1

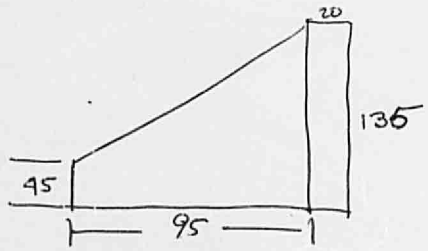

$A_1 = \frac{135+45}{2} \cdot 95 + 20 \times 135$

$A_1 = 11{,}250$

A2

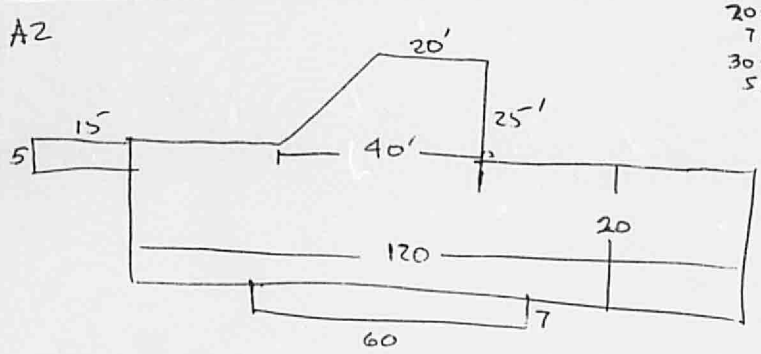

$20 \times 120 = 2400$
$7 \times 60 = 420$
$30 \times 25 = 750$
$5 \times 15 = 75$
$A_2 = 3645$

A3

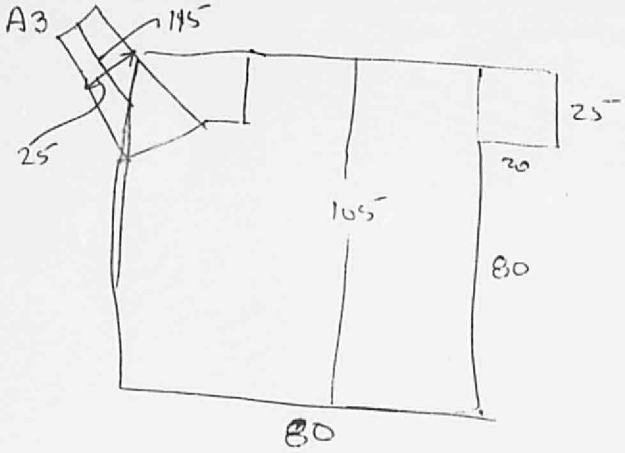

$80 \times 105 = 8400$
$20 \times 25 = 500$
$25 \times 115 = 2875$
$A_3 = 11{,}775$

10/10/80

A4

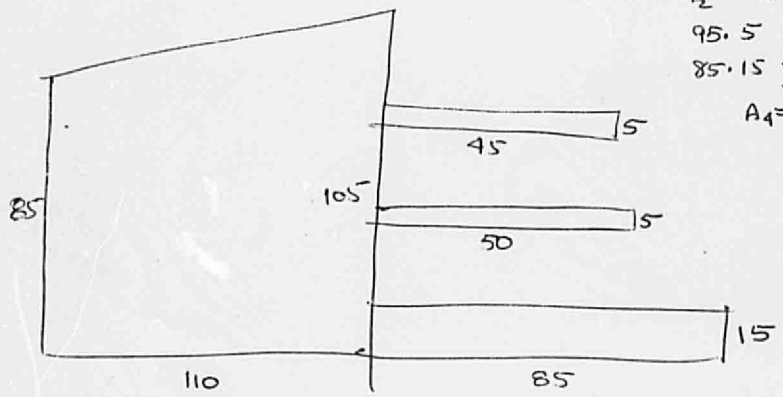

$\frac{105+85}{2} \cdot 110 = 10450$

$95 \cdot 5 = 475$

$85 \cdot 15 = 1275$

$A_4 = 12{,}200$

A5

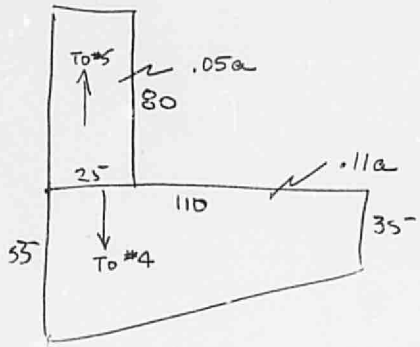

A5

80×25	2000
45×110	1950
A5 =	6950

A6

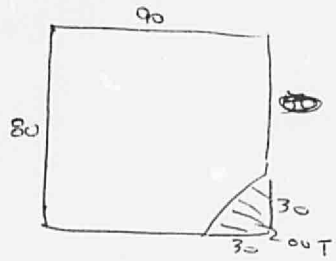

80×90 =	7200
−	450
A6 =	6750

Total Ashphalt

A1 + A3 + A4 + A5

11,250
11,775
12,200
6950
42,175 sq ft
= 4686.11 sq yds

Building 6750 ft^2
Courtyard 3645 ft^2
Ashphalt 42,175 ft^2
52,570 ft^2 = 1.21 ac total affect area
43,500

BASIN 2 .26 ac

BASIN 4 .79 ac

BASIN 5 .16 ac

2 3 6 4