CITY OF ALBUQUERQUE

April 7, 2016

David Soule, PE
Rio Grande Engineering
1606 Central SE Suite 201
Albuquerque, NM 87106

Re: Sandia Area Federal Credit Union-Starbucks
11301 and 11321 Montgomery NE
Requested for Permanent C. O. - Accepted
Engineers Stamp Date 7/1/15 (F22D002)
Certification dated: 3-31-16

Dear Mr. Soule,

Based on the Certification received 3/31/2016, the site is acceptable for release of Certificate of Occupancy by Hydrology.

If you have any questions, you can contact me at 924-3986 or Totten Elliott at 924-3982.

Sincerely,

Abiel Carrillo, P.E.
Principal Engineer, Planning Department
Development and Review Services

TE/AC
C: email Cordova, Camille C.; Miranda, Rachel; Sandoval, Darlene M.; Blocker, Lois

PO Box 1293
Albuquerque
New Mexico 87103
www.cabq.gov

City of Albuquerque

Planning Department

Development & Building Services Division

DRAINAGE AND TRANSPORTATION INFORMATION SHEET

(REV 02/2013)

Project Title: sandia area federal credit union-starbucks Building Permit #: 201591133 (ONLY) City Drainage #: f22-f002

DRB#: EPC#: Work Order#:

Legal Description: lots 3 A,B,C new holiday park

City Address: 11301 montgomery ne

11301 & 11321

Engineering Firm: RIO GRANDE ENGINEERING Contact: DAVID SOULE

Address: PO BOX 93924, ALBUQUERQUE, NM 87199

Phone#: 505.321.9099 Fax#: 505.872.0999 E-mail: DAVID@RIOGRANDEENGINEERING.COM

Owner: sandia area federal credit union Contact:

Address:

Phone#: Fax#: E-mail:

Architect: slagle Herr Contact:

Address:

Phone#: Fax#: E-mail:

Surveyor: TERRA LAND SURVEY Contact: CHRIS MEDINA

Address:

Phone#: 917.8921 Fax#: E-mail:

Contractor: Contact:

Address:

Phone#: Fax#: E-mail:

TYPE OF SUBMITTAL:

____ DRAINAGE REPORT
____ DRAINAGE PLAN 1st SUBMITTAL
____ DRAINAGE PLAN RESUBMITTAL
____ CONCEPTUAL G & D PLAN
____ GRADING PLAN
____ EROSION & SEDIMENT CONTROL PLAN (ESC)
X ENGINEER'S CERT (HYDROLOGY)
____ CLOMR/LOMR
____ TRAFFIC CIRCULATION LAYOUT (TCL)
____ ENGINEER'S CERT (TCL)
____ ENGINEER'S CERT (DRB SITE PLAN)
____ ENGINEER'S CERT (ESC)
____ SO-19
____ OTHER (SPECIFY)

CHECK TYPE OF APPROVAL/ACCEPTANCE SOUGHT:

____ SIA/FINANCIAL GUARANTEE RELEASE
____ PRELIMINARY PLAT APPROVAL
____ S. DEV. PLAN FOR SUB'D APPROVAL
____ S. DEV. FOR BLDG. PERMIT APPROVAL
____ SECTOR PLAN APPROVAL
____ FINAL PLAT APPROVAL
X CERTIFICATE OF OCCUPANCY (PERM)
____ CERTIFICATE OF OCCUPANCY (TCL TEMP)
____ FOUNDATION PERMIT APPROVAL
____ BUILDING PERMIT APPROVAL
____ GRADING PERMIT APPROVAL
____ PAVING PERMIT APPROVAL
____ WORK ORDER APPROVAL
____ GRADING CERTIFICATION
____ SO-19 APPROVAL
____ ESC PERMIT APPROVAL
____ ESC CERT. ACCEPTANCE
____ OTHER (SPECIFY)

RECEIVED
MAR 3 1 2016
LAND DEVELOPMENT SECTION

WAS A PRE-DESIGN CONFERENCE ATTENDED: ____ Yes X No ____ Copy Provided

DATE SUBMITTED: 2/23/16 By:

Requests for approvals of Site Development Plans and/or Subdivision Plats shall be accompanied by a drainage submittal. The particular nature, location, anc scope to the proposed development defines the degree of drainage detail. One or more of the following levels of submittal may be required based on the followin

1. **Conceptual Grading and Drainage Plan**: Required for approval of Site Development Plans greater than five (5) acres and Sector Plans
2. **Drainage Plans**: Required for building permits, grading permits, paving permits and site plans less than five (5) acres
3. **Drainage Report**: Required for subdivision containing more than ten (10) lots or constituting five (5) acres or more
4. **Erosion and Sediment Control Plan:** Required for any new development and redevelopment site with 1-acre or more of land disturbing area, including project less than 1-acre than are part of a larger common plan of development

CITY OF ALBUQUERQUE

Planning Department
Suzanne Lubar, Director

Mayor Richard J. Berry

February 26, 2016

David Soule, PE
Rio Grande Engineering
1606 Central SE Suite 201
Albuquerque, NM 87106

RE: **Sandia Area Federal Credit Union**
11301 Montgomery NE
Requested for 30 Day Temporary C. O. - Accepted
Engineers Stamp Date 7/1/15 (F22D002)
Certification dated: 2-23-16

Dear Mr. Soule,

PO Box 1293

Based on the certification provided in your submittal received 2/23/2016, the above referenced is approved for a 30-day Temporary Release of Occupancy by Hydrology.

Albuquerque

If you have any questions, you can contact me at 924-3999 or Totten Elliott at 924-3982.

New Mexico 87103

Sincerely,

www.cabq.gov

Shahab Biazar, P.E.
City Engineer, Planning Dept.
Development Review Services

TE/SB
C: email, Cordova, Camille C.; Miranda, Rachel; Sandoval, Darlene M.; Blocker, Lois

FASTRAX

City of Albuquerque

Planning Department

Development & Building Services Division

DRAINAGE AND TRANSPORTATION INFORMATION SHEET

(REV 02/2013)

Project Title: sandia area federal credit union-starbucks Building Permit #: 201591133 (ONLY) City Drainage #: f22-f002

DRB#: _____ EPC#: _____ Work Order#: _____

Legal Description: lots 3c (ONLY) new holiday park

City Address: 13101 montgomery ne

Engineering Firm: RIO GRANDE ENGINEERING Contact: DAVID SOULE

Address: PO BOX 93924, ALBUQUERQUE, NM 87199

Phone#: 505.321.9099 Fax#: 505.872.0999 E-mail: DAVID@RIOGRANDEENGINEERING.COM

Owner: sandia area federal credit union Contact: _____

Address: _____

Phone#: _____ Fax#: _____ E-mail: _____

Architect: slagle Herr Contact: _____

Address: _____

Phone#: _____ Fax#: _____ E-mail: _____

Surveyor: TERRA LAND SURVEY Contact: CHRIS MEDINA

Address: _____

Phone#: 917.8921 Fax#: _____ E-mail: _____

Contractor: _____ Contact: _____

Address: _____

Phone#: _____ Fax#: _____ E-mail: _____

TYPE OF SUBMITTAL:

____ DRAINAGE REPORT
____ DRAINAGE PLAN 1st SUBMITTAL
____ DRAINAGE PLAN RESUBMITTAL
____ CONCEPTUAL G & D PLAN
____ GRADING PLAN
____ EROSION & SEDIMENT CONTROL PLAN (ESC)
X ENGINEER'S CERT (HYDROLOGY)
____ CLOMR/LOMR
____ TRAFFIC CIRCULATION LAYOUT (TCL)
____ ENGINEER'S CERT (TCL)
____ ENGINEER'S CERT (DRB SITE PLAN)
____ ENGINEER'S CERT (ESC)
____ SO-19
____ OTHER (SPECIFY)

CHECK TYPE OF APPROVAL/ACCEPTANCE SOUGHT:

____ SIA/FINANCIAL GUARANTEE RELEASE
____ PRELIMINARY PLAT APPROVAL
____ S. DEV. PLAN FOR SUB'D APPROVAL
____ S. DEV. FOR BLDG. PERMIT APPROVAL
____ SECTOR PLAN APPROVAL
____ FINAL PLAT APPROVAL
X CERTIFICATE OF OCCUPANCY (PERM)
____ CERTIFICATE OF OCCUPANCY (TCL TEMP)
____ FOUNDATION PERMIT APPROVAL
____ BUILDING PERMIT APPROVAL
____ GRADING PERMIT APPROVAL
____ PAVING PERMIT APPROVAL
____ WORK ORDER APPROVAL
____ GRADING CERTIFICATION
____ SO-19 APPROVAL
____ ESC PERMIT APPROVAL
____ ESC CERT. ACCEPTANCE
____ OTHER (SPECIFY)

RECEIVED
FEB 23 2016
LAND DEVELOPMENT SECTION

WAS A PRE-DESIGN CONFERENCE ATTENDED: ____ Yes X No ____ Copy Provided

DATE SUBMITTED: 2/23/16 By: _____

Requests for approvals of Site Development Plans and/or Subdivision Plats shall be accompanied by a drainage submittal. The particular nature, location, anc scope to the proposed development defines the degree of drainage detail. One or more of the following levels of submittal may be required based on the followin

1. **Conceptual Grading and Drainage Plan:** Required for approval of Site Development Plans greater than five (5) acres and Sector Plans
2. **Drainage Plans:** Required for building permits, grading permits, paving permits and site plans less than five (5) acres
3. **Drainage Report:** Required for subdivision containing more than ten (10) lots or constituting five (5) acres or more
4. **Erosion and Sediment Control Plan:** Required for any new development and redevelopment site with 1-acre or more of land disturbing area, including project less than 1-acre than are part of a larger common plan of development

CITY OF ALBUQUERQUE

Planning Department
Suzanne Lubar, Director

Mayor Richard J. Berry

February 17, 2016

David Soule, PE
Rio Grande Engineering
1606 Central SE Suite 201
Albuquerque, NM 87106

RE: **Sandia Area Federal Credit Union-Starbucks**
11301 Montgomery NE
Requested for 60 Day Temporary C. O. - Accepted
Engineers Stamp Date 7/1/15 (F22D002)
Certification dated: 12-4-15

Dear Mr. Soule,

Based on the certification provided in your submittal received 2/16/2016, the above referenced is approved for a 30-day Temporary Release of Occupancy by Hydrology. However, before a permanent CO can be accepted the following comments must be addressed.

- Provide as-built survey points for the inlets on the Sandia Area Federal Credit Union site.

An inspection by our office will need to take place after these corrects are made.

If you have any questions, you can contact me at 924-3999 or Totten Elliott at 924-3982.

Sincerely,

Shahab Biazar, P.E.
City Engineer, Planning Dept.
Development Review Services

TE/SB
C: email, Cordova, Camille C.; Miranda, Rachel; Sandoval, Darlene M.; Blocker, Lois

PO Box 1293
Albuquerque
New Mexico 87103
www.cabq.gov

City of Albuquerque

Planning Department

Development & Building Services Division

DRAINAGE AND TRANSPORTATION INFORMATION SHEET

(REV 02/2013)

Project Title: sandia area federal credit union-starbucks Building Permit #: 201591133 (ONLY) City Drainage #: f22-f002

DRB#: EPC#: Work Order#:

Legal Description: lots 3c (ONLY) new holiday park

City Address: 13101 montgomery ne

Engineering Firm: RIO GRANDE ENGINEERING Contact: DAVID SOULE

Address: PO BOX 93924, ALBUQUERQUE, NM 87199

Phone#: 505.321.9099 Fax#: 505.872.0999 E-mail: DAVID@RIOGRANDEENGINEERING.COM

Owner: sandia area federal credit union Contact:

Address:

Phone#: Fax#: E-mail:

Architect: slagle Herr Contact:

Address:

Phone#: Fax#: E-mail:

Surveyor: TERRA LAND SURVEY Contact: CHRIS MEDINA

Address:

Phone#: 917.8921 Fax#: E-mail:

Contractor: Contact:

Address:

Phone#: Fax#: E-mail:

TYPE OF SUBMITTAL:

____ DRAINAGE REPORT
____ DRAINAGE PLAN 1st SUBMITTAL
____ DRAINAGE PLAN RESUBMITTAL
____ CONCEPTUAL G & D PLAN
____ GRADING PLAN
____ EROSION & SEDIMENT CONTROL PLAN (ESC)
X ENGINEER'S CERT (HYDROLOGY)
____ CLOMR/LOMR
____ TRAFFIC CIRCULATION LAYOUT (TCL)
____ ENGINEER'S CERT (TCL)
____ ENGINEER'S CERT (DRB SITE PLAN)
____ ENGINEER'S CERT (ESC)
____ SO-19
____ OTHER (SPECIFY)

CHECK TYPE OF APPROVAL/ACCEPTANCE SOUGHT:

____ SIA/FINANCIAL GUARANTEE RELEASE
____ PRELIMINARY PLAT APPROVAL
____ S. DEV. PLAN FOR SUB'D APPROVAL
____ S. DEV. FOR BLDG. PERMIT APPROVAL
____ SECTOR PLAN APPROVAL
____ FINAL PLAT APPROVAL
X CERTIFICATE OF OCCUPANCY (PERM) LOT C3 ONLY (201591133)
____ CERTIFICATE OF OCCUPANCY (TCL)
____ FOUNDATION PERMIT APPROVAL
____ BUILDING PERMIT APPROVAL
____ GRADING PERMIT APPROVAL
____ PAVING PERMIT APPROVAL
____ WORK ORDER APPROVAL
____ GRADING CERTIFICATION

____ SO-19 APPROVAL
____ ESC PERMIT APPROVAL
____ ESC CERT. ACCEPTANCE
____ OTHER (SPECIFY)

RECEIVED
FEB 16 2016
LAND DEVELOPMENT SECTION

WAS A PRE-DESIGN CONFERENCE ATTENDED: ____ Yes X No ____ Copy Provided

DATE SUBMITTED: 12/4/15 By:

Requests for approvals of Site Development Plans and/or Subdivision Plats shall be accompanied by a drainage submittal. The particular nature, location, and scope to the proposed development defines the degree of drainage detail. One or more of the following levels of submittal may be required based on the followin

1. **Conceptual Grading and Drainage Plan**: Required for approval of Site Development Plans greater than five (5) acres and Sector Plans
2. **Drainage Plans**: Required for building permits, grading permits, paving permits and site plans less than five (5) acres
3. **Drainage Report**. Required for subdivision containing more than ten (10) lots or constituting five (5) acres or more
4. **Erosion and Sediment Control Plan:** Required for any new development and redevelopment site with 1-acre or more of land disturbing area, including project less than 1-acre than are part of a larger common plan of development

CITY OF ALBUQUERQUE

Planning Department
Suzanne Lubar, Director

Mayor Richard J. Berry

December 8, 2015

David Soule, PE
Rio Grande Engineering
1606 Central SE Suite 201
Albuquerque, NM 87106

RE: **Sandia Area Federal Credit Union-Starbucks**
13101 Montgomery NE
Requested for 30 Day Temporary C. O. - Accepted
Engineers Stamp Date 7/1/15 (F22D002)

Dear Mr. Soule,

Based on the certification provided in your submittal received 12/2/2015, the above referenced is approved for a 30-day Temporary Release of Occupancy by Hydrology. However, before a permanent CO can be accepted the following comments must be addressed.

- The sidewalk culvert extends thru the First Flush Trench thereby blocking the flow. The sidewalk culvert must be cut back and stop at the edge of the sidewalk as shown on the approved drawing.

An inspection by our office will need to take place after these corrects are made.

If you have any questions, you can contact me at 924-3686 or Totten Elliott at 924-3982.

PO Box 1293

Albuquerque

New Mexico 87103

www.cabq.gov

Sincerely,

Abiel Carrillo, P.E.,
Principal Engineer, Planning Department
Development and Review Services

Sincerely,

TE/AC
C: File

City of Albuquerque

Planning Department

Development & Building Services Division

DRAINAGE AND TRANSPORTATION INFORMATION SHEET

(REV 02/2013)

Project Title: sandia area federal credit union-starbucks Building Permit #: 201591133 (ONLY) City Drainage #: f22D002

DRB#: EPC#: Work Order#:

Legal Description: lots 3c (ONLY) new holiday park

City Address: 13101 montgomery ne

Engineering Firm: RIO GRANDE ENGINEERING Contact: DAVID SOULE

Address: PO BOX 93924, ALBUQUERQUE, NM 87199

Phone#: 505.321.9099 Fax#: 505.872.0999 E-mail: DAVID@RIOGRANDEENGINEERING.COM

Owner: sandia area federal credit union Contact:

Address:

Phone#: Fax#: E-mail:

Architect: slagle Herr Contact:

Address:

Phone#: Fax#: E-mail:

Surveyor: TERRA LAND SURVEY Contact: CHRIS MEDINA

Address:

Phone#: 917.8921 Fax#: E-mail:

Contractor: Contact:

Address:

Phone#: Fax#: E-mail:

TYPE OF SUBMITTAL:

____ DRAINAGE REPORT
____ DRAINAGE PLAN 1st SUBMITTAL
____ DRAINAGE PLAN RESUBMITTAL
____ CONCEPTUAL G & D PLAN
____ GRADING PLAN
____ EROSION & SEDIMENT CONTROL PLAN (ESC)
X ENGINEER'S CERT (HYDROLOGY)
____ CLOMR/LOMR
____ TRAFFIC CIRCULATION LAYOUT (TCL)
____ ENGINEER'S CERT (TCL)
____ ENGINEER'S CERT (DRB SITE PLAN)
____ ENGINEER'S CERT (ESC)
____ SO-19
____ OTHER (SPECIFY)

CHECK TYPE OF APPROVAL/ACCEPTANCE SOUGHT:

____ SIA/FINANCIAL GUARANTEE RELEASE
____ PRELIMINARY PLAT APPROVAL
____ S. DEV. PLAN FOR SUB'D APPROVAL
____ S. DEV. FOR BLDG. PERMIT APPROVAL
____ SECTOR PLAN APPROVAL
____ FINAL PLAT APPROVAL
X CERTIFICATE OF OCCUPANCY (PERM) LOT C3 ONLY (201591133)
____ CERTIFICATE OF OCCUPANCY (TCL TEMP)
____ FOUNDATION PERMIT APPROVAL
____ BUILDING PERMIT APPROVAL
____ GRADING PERMIT APPROVAL
____ PAVING PERMIT APPROVAL
____ WORK ORDER APPROVAL
____ GRADING CERTIFICATION
____ SO-19 APPROVAL
____ ESC PERMIT APPROVAL
____ ESC CERT. ACCEPTANCE
____ OTHER (SPECIFY)

RECEIVED DEC 04 2015 LAND DEVELOPMENT SECTION

WAS A PRE-DESIGN CONFERENCE ATTENDED: ____ Yes X No ____ Copy Provided

DATE SUBMITTED: 12/4/15 By:

Requests for approvals of Site Development Plans and/or Subdivision Plats shall be accompanied by a drainage submittal. The particular nature, location, anc scope to the proposed development defines the degree of drainage detail. One or more of the following levels of submittal may be required based on the followin

1. **Conceptual Grading and Drainage Plan**: Required for approval of Site Development Plans greater than five (5) acres and Sector Plans
2. **Drainage Plans**: Required for building permits, grading permits, paving permits and site plans less than five (5) acres
3. **Drainage Report**: Required for subdivision containing more than ten (10) lots or constituting five (5) acres or more
4. **Erosion and Sediment Control Plan:** Required for any new development and redevelopment site with 1-acre or more of land disturbing area, including project less than 1-acre than are part of a larger common plan of development

CITY OF ALBUQUERQUE

July 7, 2015

David Soule, PE
Rio Grande Engineering
PO Box 93924
Albuquerque, NM 87199

RE: **Sandia Area Credit Union and Starbucks, 11301 Montgomery Boulevard**
Grading and Drainage Plan
Engineer's Stamp Date 7-01-2015 (File: F22-D002)

Dear Mr. Soule:

Based upon the information provided in your submittal received 7-06-15, the above referenced plan is approved for Building Permit with the following conditions:

1. An approved plat showing the proposed storm drain easement is needed prior to construction.
2. A storm drain easement must be shown on the Engineer's certified plan prior to Certificate of Occupancy.

If you have any questions, you can contact me at 924-3924.

Sincerely,

Jeanne Wolfenbarger, P.E.
Senior Engineer, Planning Dept.
Development Review Services

Orig: Drainage file
c.pdf Addressee via Email

PO Box 1293
Albuquerque
New Mexico 87103
www.cabq.gov

F22D002_BP_Appr

City of Albuquerque

Planning Department

Development & Building Services Division

DRAINAGE AND TRANSPORTATION INFORMATION SHEET

(REV 02/2013)

F22D002

Project Title: sandia area federal credit union-starbucks Building Permit #: _____ City Drainage #: ~~F22-1002~~

DRB#: _____ EPC#: _____ Work Order#: _____

Legal Description: lots 3a,3b,3c new holiday park

City Address: 13101 montgomery ne

Engineering Firm: RIO GRANDE ENGINEERING Contact: DAVID SOULE

Address: PO BOX 93924, ALBUQUERQUE, NM 87199

Phone#: 505.321.9099 Fax#: 505.872.0999 E-mail: DAVID@RIOGRANDEENGINEERING.COM

Owner: sandia area federal credit union Contact: _____

Address: _____

Phone#: _____ Fax#: _____ E-mail: _____

Architect: slagle Herr Contact: _____

Address: _____

Phone#: _____ Fax#: _____ E-mail: _____

Surveyor: CONSTRUCTION SURVEY INCORPORATED Contact: JOHN GALLEGOS

Address: _____

Phone#: 917.8921 Fax#: _____ E-mail: _____

Contractor: _____ Contact: _____

Address: _____

Phone#: _____ Fax#: _____ E-mail: _____

TYPE OF SUBMITTAL:

____ DRAINAGE REPORT
X DRAINAGE PLAN 1st SUBMITTAL
____ DRAINAGE PLAN RESUBMITTAL
____ CONCEPTUAL G & D PLAN
____ GRADING PLAN
____ EROSION & SEDIMENT CONTROL PLAN (ESC)
____ ENGINEER'S CERT (HYDROLOGY)
____ CLOMR/LOMR
____ TRAFFIC CIRCULATION LAYOUT (TCL)
____ ENGINEER'S CERT (TCL)
____ ENGINEER'S CERT (DRB SITE PLAN)
____ ENGINEER'S CERT (ESC)
____ SO-19
____ OTHER (SPECIFY)

CHECK TYPE OF APPROVAL/ACCEPTANCE SOUGHT:

____ SIA/FINANCIAL GUARANTEE RELEASE
____ PRELIMINARY PLAT APPROVAL
____ S. DEV. PLAN FOR SUB'D APPROVAL
____ S. DEV. FOR BLDG. PERMIT APPROVAL
____ SECTOR PLAN APPROVAL
____ FINAL PLAT APPROVAL
____ CERTIFICATE OF OCCUPANCY (PERM)
____ CERTIFICATE OF OCCUPANCY (TCL TEMP)
____ FOUNDATION PERMIT APPROVAL
X BUILDING PERMIT APPROVAL
X GRADING PERMIT APPROVAL
____ PAVING PERMIT APPROVAL
____ WORK ORDER APPROVAL
____ GRADING CERTIFICATION
____ SO-19 APPROVAL
____ ESC PERMIT APPROVAL
____ ESC CERT. ACCEPTANCE
____ OTHER (SPECIFY)

AC varified

RECEIVED
JUL -6 2015
LAND DEVELOPMENT SECTION

WAS A PRE-DESIGN CONFERENCE ATTENDED: ____ Yes X No ____ Copy Provided

DATE SUBMITTED: 6/29/15 By: _____

Requests for approvals of Site Development Plans and/or Subdivision Plats shall be accompanied by a drainage submittal. The particular nature, location, anc scope to the proposed development defines the degree of drainage detail. One or more of the following levels of submittal may be required based on the followin

1. **Conceptual Grading and Drainage Plan**: Required for approval of Site Development Plans greater than five (5) acres and Sector Plans
2. **Drainage Plans**: Required for building permits, grading permits, paving permits and site plans less than five (5) acres
3. **Drainage Report**: Required for subdivision containing more than ten (10) lots or constituting five (5) acres or more
4. **Erosion and Sediment Control Plan:** Required for any new development and redevelopment site with 1-acre or more of land disturbing area, including project less than 1-acre than are part of a larger common plan of development

RIO GRANDE ENGINEERING OF NEW MEXICO, LLC

July 1, 2015

Ms. Jeanne Wolfenbarger,PE
Senior Engineer, Planning Department
Development Review
City of Albuquerque

RE: Grading and Drainage Plan
F22-D002
Sandia Area Credit Union

Dear Ms. Wolfenbarger:

The purpose of this letter is to accompany the revised drainage submittal. The plan has been modified to address your written comments dates June 30 2015. The following is a response to your comments

1. We are adding this easement to the plat, the surveyor is preparing the second sheet
   It will be emailed to you when completed and submitted by Friday for drb consideration.
2. We have added the benchmark
3. We have corrected the volume on infiltrator tank 2- we transposed numbers
4. We have corrected the top of pond elevations
5. We have added the orifice plat detail and labeled.
6. We have revised the detail in the report, we have single and doubles, also the layout was alternated to have 45 degree bends, the west tank is the tank for cleaning so we had to connect as shown
7. The 5740 was set so the first flush volume was maintained. The flow from the starbuck enters the inlet and that is how the pipe discharges 1.3 cfs at 5740
8. We included the pictures and file number
   We are worried about draining next to a retaining wall we have stopped the sidewalk culvert short so the first flush flow is captured by a harvest trench and spills out a 2' opening as before.

Should you have any questions regarding this submittal, please do not hesitate to call me.

Sincerely,

David Soule, PE
Rio Grande Engineering
PO Box 93924
Albuquerque, New Mexico 87199

RECEIVED
JUL - 2 2015
LAND DEVELOPMENT SECTION

CITY OF ALBUQUERQUE

June 30, 2015

David Soule, PE
Rio Grande Engineering
PO Box 93924
Albuquerque, NM 87199

RE: **Sandia Area Credit Union and Starbucks, 11301 Montgomery Boulevard**
Grading and Drainage Plan
Engineer's Stamp Date 6-29-2015 (File: F22-D002)

Dear Mr. Soule:

This plan is approved for DRB Action for Plat approval provided that the following is addressed and given as part of DRB submittal in advance:

PO Box 1293

Albuquerque

New Mexico 87103

www.cabq.gov

1) The recent grading and drainage plan now shows proposed property lines. Because the north lot is proposed to drain through the system of 12-inch pipes and infiltrators to Montgomery Boulevard within the southern lot, provide private drainage easement from the property line to Montgomery Boulevard that encompasses this system which conveys the northern lot flows. Provide a wide enough easement to incorporate a minimum distance of 5 feet on either side of the proposed infrastructure for this system. Show this proposed easement on an exhibit along with the existing and proposed property lines and proposed drainage infrastructure for preliminary plat approval. Finalization of easement can be provided prior to final plat approval. [illegible]

Prior to Building Permit approval, provide the following:

2) Provide benchmark and datum. ✓

3) Revise proposed report volumes to match what is on the grading and drainage plan. On Sheet 4, a volume of 2379 cubic feet is listed which does not match the plan, and on the "Weighted E Method", the volumes listed for the infiltrators and for the temporary pond do not match what is on the plan.

4) The Water Quality pond in the center of the site still needs to be revised. The top elevation of 49.25 is adjacent to curb spot elevations of 51.5 and 52.5. Revise as needed. ✓

5) Both the orifice plate detail and Detail "A" have been deleted from the previous submittal. Make sure to also add the size of the orifice on the detail itself that matches the drainage report and list invert elevation on actual detail, too. ✓

6) On the grading and drainage plan, change the verbage "tank" to "infiltrator". Now that multiple chambers are provided, revise the report accordingly on the trench detail which indicates "Multiple chambers not used for this application". For this new layout, show connection from pipe into infiltrator on the plan and show invert elevations at the connection. In lieu of having two bends on the north side it is recommended to make a direct connection into the westernmost series of infiltrators to prevent clogging up of the system. Ben ✓

7) How does the site discharge at 1.30 cfs at elevation 5740 if the invert elevation of the downstream set of infiltrators is set at elevation 5740? – from Type D inlet

8) Since you have the excerpt from the original report showing the discharge of 4.7 cfs into the original system, also provide that for records for this project, too. ✓

9) Because it is desired to retain first flush for east building, provide curb cuts for parking lot immediately to the west to have a first flush pond west of the parking lot. Then, any additional runoff can drain to the Type "C" inlet to the south. ✓

If you have any questions, you can contact me at 924-3924.

Sincerely,

Jeanne Wolfenbarger, P.E.
Senior Engineer, Planning Dept.
Development Review Services

Orig: Drainage file
c.pdf Addressee via Email

SUBDIVISION PLAT OF

TRACTS C-1, C-2 AND C-3 THE NEW HOLIDAY PARK

BEING A RE-PLAT OF
TRACT "C"
THE NEW HOLIDAY PARK
PROJECTED SECTION 34, T 11 N, R 4 E, N.M.P.M.
ELENA GALLEGOS LAND GRANT
CITY OF ALBUQUERQUE, BERNALILLO COUNTY, NEW MEXICO
JANUARY 2015

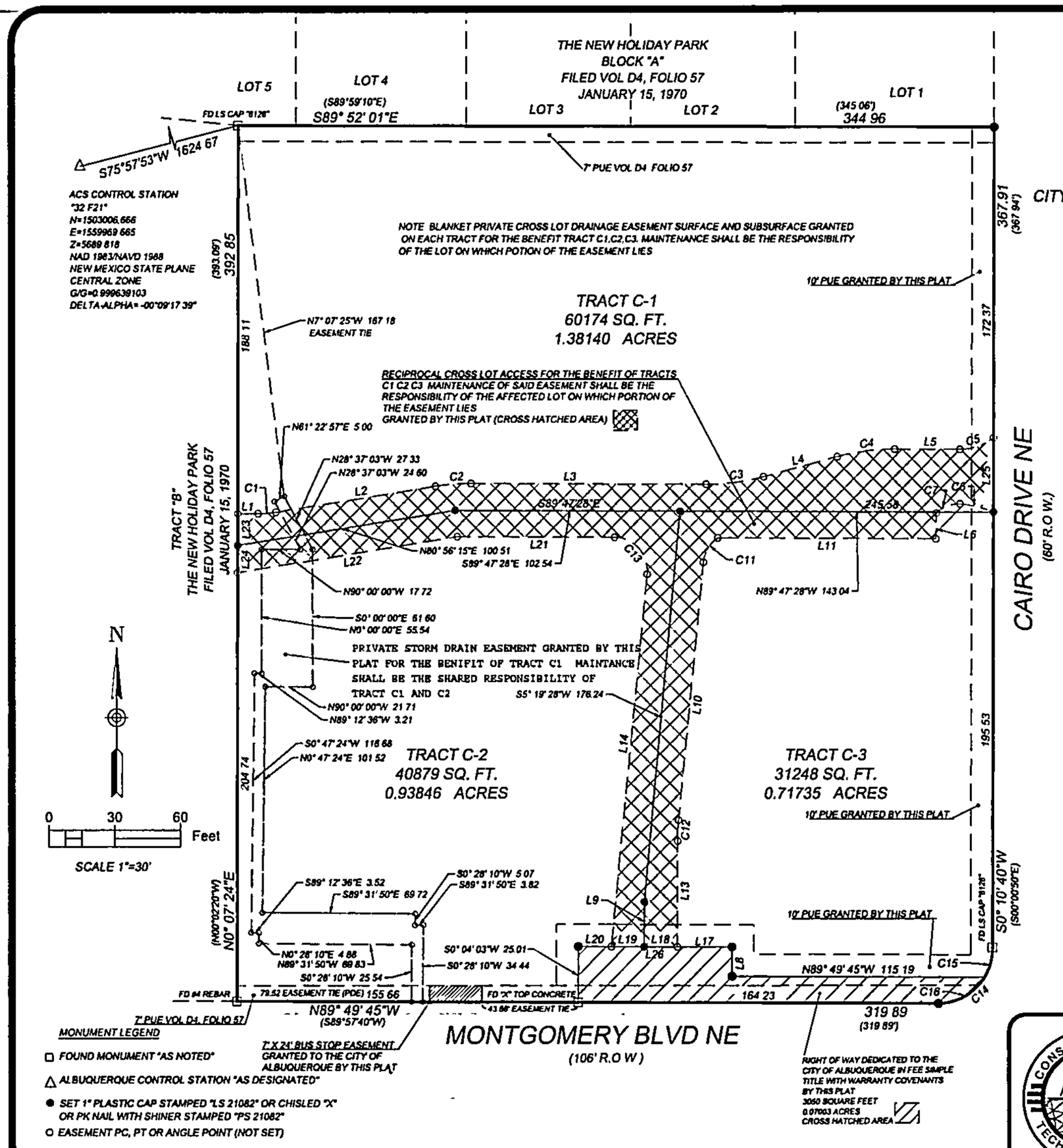

LINE TABLE		
Line #	Length	Direction
L1	9 21	N89° 47' 28"W
L2	73.81	S80° 51' 07"W
L3	107 19	N89° 47' 28"W
L4	34 82	S75° 02' 24"W
L5	29 89	N89° 47' 28"W
L6	11 50	S0° 53' 18"W
L8	13.10	S0° 05' 09"W
L9	20.26	S0° 12' 32"W
L10	116.38	S5° 38' 06"W
L11	99.60	S89° 47' 28"E
L13	47 54	S0° 12' 32"W
L14	168.29	N5° 38' 06"E
L17	24 94	N89° 49' 45"W
L18	15.01	N89° 49' 45"W
L19	15 07	N89° 49' 45"W

LINE TABLE		
Line #	Length	Direction
L20	15 04	S89° 49' 45"E
L21	71 75	S89° 47' 28"E
L22	101 52	S80° 51' 07"W
L23	14 37	S3° 03' 21"E
L24	12 16	S0° 07' 24"W
L25	33 52	S0° 10' 40"W
L26	70 07	N89° 49' 45"W

CURVE TABLE					
Curve #	Length	Radius	Delta	Chord Direction	Chord Length
C1	8 17	50 00	9°21'24"	N85° 31 49"E	8 16
C2	16 33	100 00	9°21'24"	S85° 31' 49"W	16 31
C3	26 47	100 00	15°10'06"	N82° 37' 28"E	26.40
C4	26 47	100 00	15°10'06"	S82° 37' 28"W	26.40
C5	16.52	25 08	37°46'27"	N71° 10' 46"E	16 23
C6	15 87	55 34	16°26'01"	N76° 08' 39"W	15 82
C7	11 90	14 56	46°50'27"	S68° 45' 13"W	11.57
C11	13 09	15 00	49°58'52"	S30° 37' 34"W	12 67
C12	9 47	100 00	5°25'37"	S2° 55' 20"W	9 47
C13	24 98	15.00	95°25'37"	N42° 04' 40"W	22 19
C14	39 15	25 00	89°42'50"	S44° 38' 08"W	35.27
C15	13 94	25.00	31°57'05"	N15° 45' 16"E	13 76
C16	25 20	25.00	57°45'44"	N60° 36' 41"E	24 15

MONUMENT LEGEND

- □ FOUND MONUMENT "AS NOTED"
- △ ALBUQUERQUE CONTROL STATION "AS DESIGNATED"
- ● SET 1" PLASTIC CAP STAMPED "LS 21082" OR CHISLED "X" OR PK NAIL WITH SHINER STAMPED "PS 21082"
- ○ EASEMENT PC, PT OR ANGLE POINT (NOT SET)

CONSTRUCTION SURVEY TECHNOLOGIES, INC
MAILING PO BOX 65395 ALBUQUERQUE, NM 87193 505-917-6921
OFFICE 1606 CENTRAL AVE SE SUITE 101 ALBUQUERQUE, NM 87106
NMSURVEYOR@GMAIL.COM

REVISED
DRAINAGE REPORT

For

SANDIA AREA FEDERAL CREDIT UNION/STARBUCKS
11301 MONTOMERY NE
Albuquerque, New Mexico

Prepared by

Rio Grande Engineering
PO Box 93924
Albuquerque, New Mexico 87199

JUNE 2015

DAVID SOULE
NEW MEXICO
14522
REGISTERED PROFESSIONAL ENGINEER

6/18/15 7/1/15
David Soule P.E. No. 14522

RECEIVED
JUL - 2 2015
LAND DEVELOPMENT SECTION

TABLE OF CONTENTS

Purpose 3
Introduction 3
Existing Conditions 3
Exhibit A-Vicinity Map 4
Proposed Conditions 5
Summary 5

Appendix

Site hydrology and hydraulic calculations ..... A
AHYMO Proposed ..... B
AHYMO Future C
ADS infiltrator specifications ..... D

Map

Site Grading and Drainage Plan

PURPOSE

The purpose of this report is to provide the Drainage Management Plan for the redevelopment of a 3 acre property located at 11301 Montgomery. This plan was prepared in accordance with the City of Albuquerque design regulations, utilizing the City of Albuquerque's Development Process Manual drainage guidelines. This report will demonstrate that the grading does not adversely affect the surrounding properties, nor the upstream or downstream facilities.

INTRODUCTION

The subject of this report, as shown on the Exhibit A, is a 3 -acre parcel of land located on the north side of Montgomery between Cairo and Juan Tabo NE The legal description of this site is tract c1,c2,c3 of the New Holiday Park subdivision. As shown on FIRM map35013C0144G, the entire site is located within Flood Zone X. The site has been fully developed in the past and this is a redevelopment of this site.

The site was designed and constructed with a buried retention tank and metered outflow. The outflow was limited to the 100-year 6-hour discharge rate assuming 100% native. The proposed development shall match existing patterns and limit the flow to similar rate. In addition the site shall retain onsite the first flush volume required.

EXISTING CONDITIONS

The site currently is graded per the grading plan F22-d2. The site drains to a single type d inlet. This inlet is connected to a large underground concrete vault. The outlet is sized such that the flow will not exceed 4.7 cfs.

PROPOSED CONDITIONS

The proposed improvements consist of removal the replacement of the existing pavement and the construction of two new buildings and one parcel for future development. The lots have cross lot drainage easements and will free discharge to two inlets that are connected to an underground infiltration chamber. The site contains 5 onsite sub basins, which were partitioned to verify the capacity of each collection and conveyance structure. Basins E and D discharge 4.69 cfs to a type C inlet at the southwest corner of the site. Basin B and C discharge 3.95 cfs to a type C inlet located at the west property line. Basin A is a future development and will retain its developed flow onsite of 5600 cubic feet, with and emergency overflow. Once the flows are captured they are stored in the infiltration system and metered out by a 9" orifice plate on the existing storm drain stub. The system was modeled using the AHYMO computer program. The site was modeled for the interim condition and ultimate condition. As shown in appendix B, in the interim condition the site will discharge 3.98 cfs to the existing Montgomery storm system. In the ultimate condition the site will discharge 5.28 cfs which exceeds the existing by .58 cfs, which when the development occurs can be reduced by additional throttling of that discharge. The ultimate condition model located in appendix c was included as a guide for the future development. The interim condition which we are constructing discharges less than existing

The first flush volume is captured within the infiltrator tanks, the outlet of tank 1 is set at 40, which will retain the first 2379 cubic feet which is more than the 1922 cubic feet required. When the rear pad is developed the first flush volume will be retained by setting the outlet elevation of the tanks. A copy of the site hydrology and capacity calculations is included in appendix A. The tank volumes and stage storage spread sheet as well as the AHYMO model is included in appendix B for the proposed and ultimate conditions are in appendix C. The infiltrator details are located in appendix C.

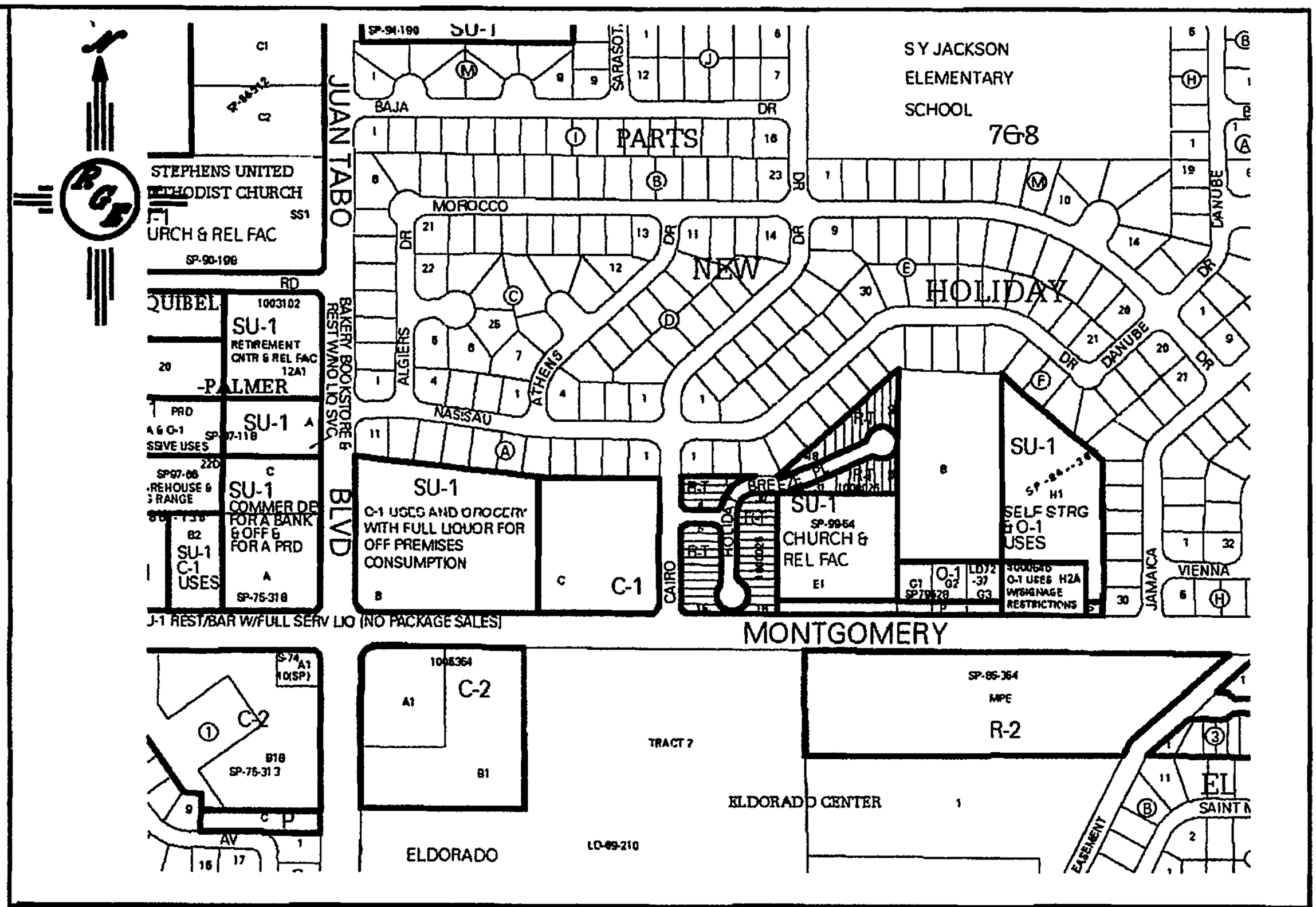

VICINITY MAP: F-22-Z

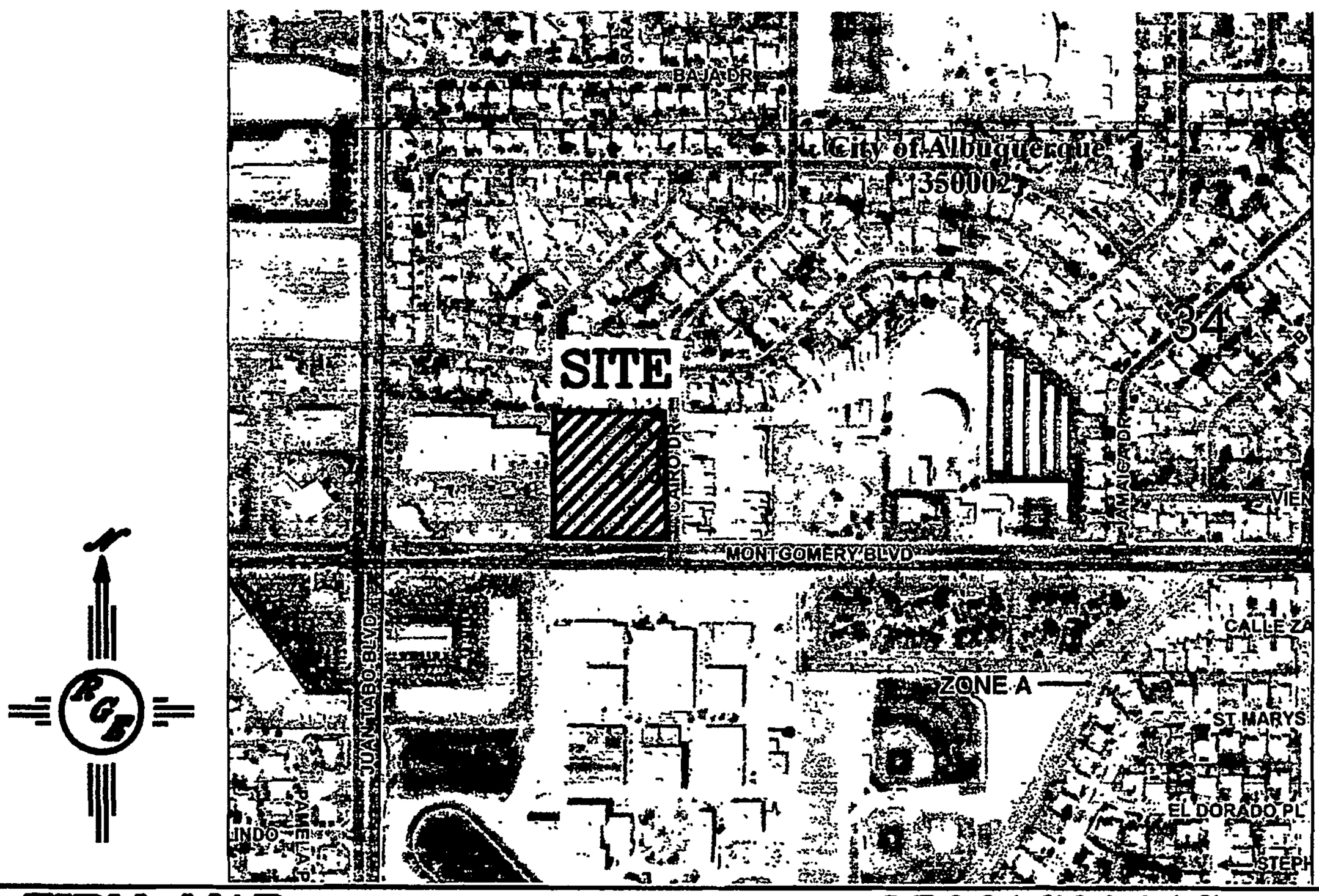

FIRM MAP: 35001C0144G

SUMMARY AND RECOMMENDATIONS

This project is a redevelopment of an existing site. The redevelopment is consistent with the approved grading plan. The proposed site will discharge less than existing and retain the first flush volume. The development will not affect the upstream or downstream properties or infrastructure. Since the effected area site encompasses more than 1 acre, a NPDES permit will be required prior to any construction activity.

APPENDIX A

SITE HYDROLOGY AND HYDRAULIC CALCULATIONS

EROSION CONTROL NOTES:

1. CONTRACTOR IS RESPONSIBLE FOR OBTAINING A TOPSOIL DISTURBANCE PERMIT PRIOR TO BEGINNING WORK.

2. CONTRACTOR IS RESPONSIBLE FOR MAINTAINING RUN-OFF ON SITE DURING CONSTRUCTION.

3. CONTRACTOR IS RESPONSIBLE FOR CLEANING ALL SEDIMENT THAT GETS INTO EXISTING RIGHT-OF-WAY.

4. REPAIR OF DAMAGED FACILITIES AND CLEANUP OF SEDIMENT ACCUMULATIONS ON ADJACENT PROPERTIES AND IN PUBLIC FACILITIES IS THE RESPONSIBILITY OF THE CONTRACTOR.

5. ALL EXPOSED EARTH SURFACES MUST BE PROTECTED FROM WIND AND WATER EROSION PRIOR TO FINAL ACCEPTANCE OF ANY PROJECT.

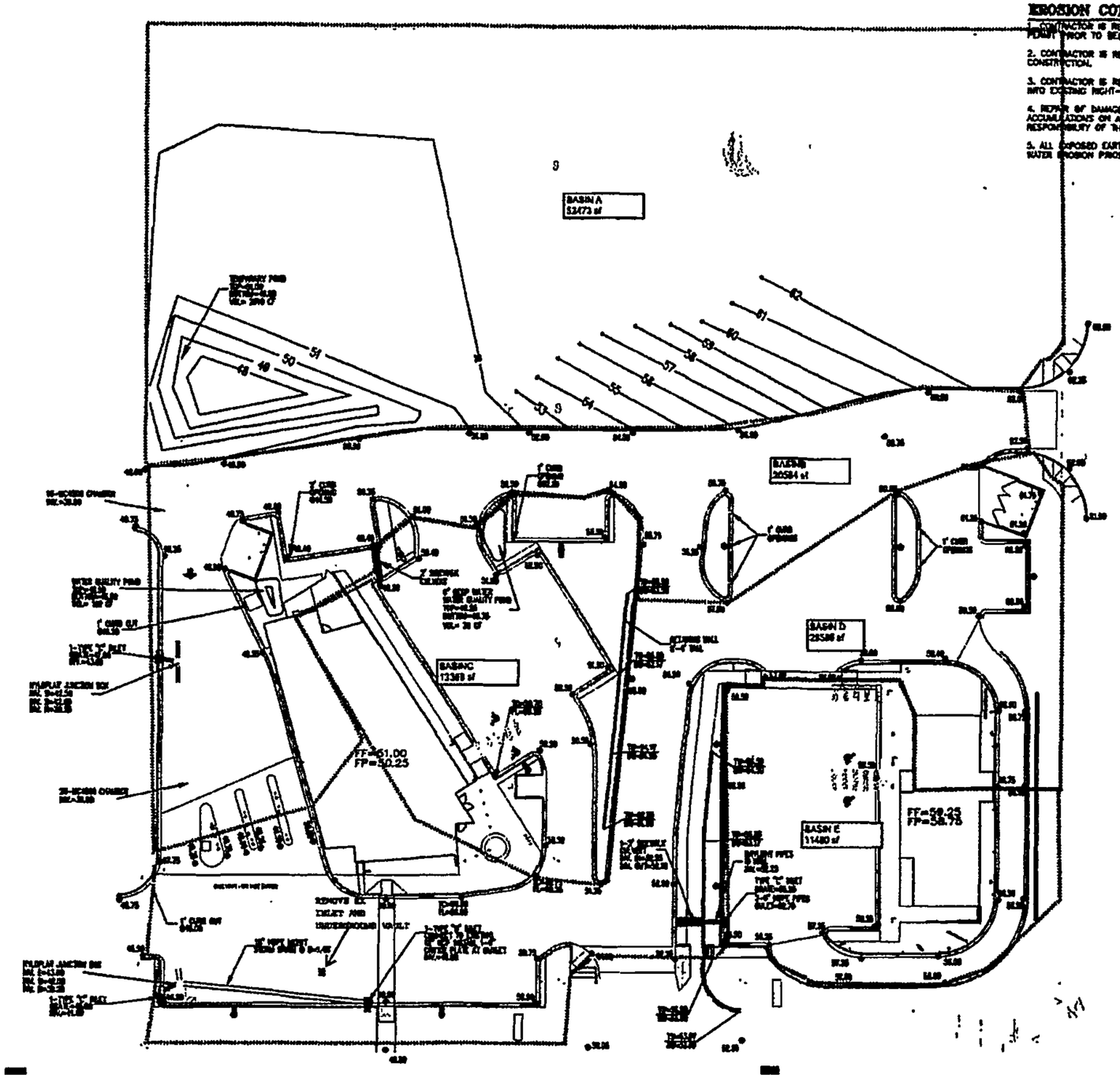

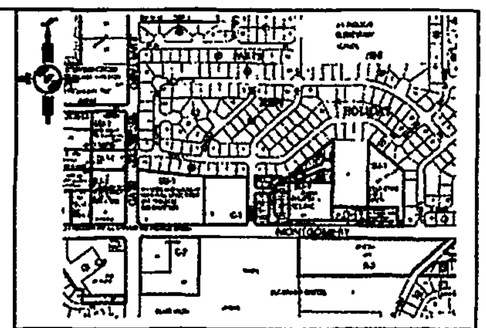

VICINITY MAP: 1-22-2

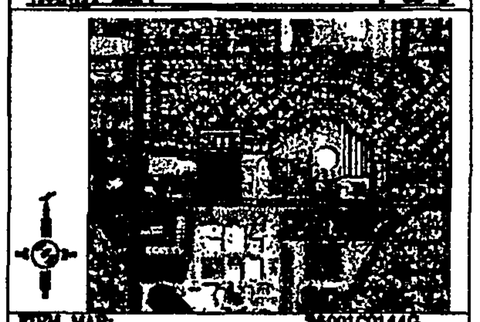

FIRM MAP: 35001C0440G

LEGAL DESCRIPTION:

TRACT C, THE NEW HOLIDAY PARK SUBDIVISION
CITY OF ALBUQUERQUE
BERNALILLO COUNTY, NEW MEXICO

NOTES:

1. ALL SPOT ELEVATIONS REPRESENT FLOWLINE ELEVATION UNLESS OTHERWISE NOTED
2. UNDERGROUND WATER RETENTION SYSTEM SHALL BE STORM TECH MC-4500,IBO

LEGEND

- EXISTING CONTOUR
- EXISTING INDEX CONTOUR
- PROPOSED CONTOUR
- PROPOSED INDEX CONTOUR
- LOT LINE
- CENTERLINE
- RIGHT-OF-WAY
- EXTENDED STEM WALL SEE ARCH PLANS FOR DETAILS
- PROPOSED ROCK FACE WALL
- EXISTING CURB AND GUTTER
- PROPOSED EDGE OF CONCRETE
- PROPOSED FLOWLINE
- EXISTING WALL

I DAVID SOULE, HAVE PERSONALLY INSPECTED THE PROPERTY ON X-XX-13. NO EARTHWORK HAS BEEN PERFORMED AND THE SITE IS CONSISTENT WITH THE TOPO SHOWN.

DAVID SOULE P.E. #14532 DATE

CAUTION:

EXISTING UTILITIES ARE NOT SHOWN. IT SHALL BE THE SOLE RESPONSIBILITY OF THE CONTRACTOR TO CONDUCT ALL NECESSARY FIELD INVESTIGATIONS PRIOR TO ANY EXCAVATION TO DETERMINE THE ACTUAL LOCATION OF UTILITIES & OTHER IMPROVEMENTS.

SCALE: 1"=30'

OWNER'S SIGN.	Satos & Starbuc	DRAWN BY
DAVID SOULE P.E. #14532 3/17/15	GRADING AND DRAINAGE PLAN	DATE 3-14
DAVID SOULE P.E. #14532	Rio Grande Engineering	SHEET # 1 of 1
		JOB #

Weighted E Method

Existing Developed Basins

											100-Year, 6-hr.			10-day
Basin	Area (sf)	Area (acres)	Treatment A %	Treatment A (acres)	Treatment B %	Treatment B (acres)	Treatment C %	Treatment C (acres)	Treatment D %	Treatment D (acres)	Weighted E (ac-ft)	Volume (ac-ft)	Flow cfs	Volume (ac-ft)
BASIN A	52473	1.205	0%	0	15.0%	0.181	5.0%	0.06023	80%	0.964	2.347	0.236	5.81	0.384
BASIN A(interim)	52473	1.205	0%	0	45.0%	0.542	50.0%	0.60231	5%	0.060	1.348	0.135	4.15	0.143
BASIN B	20564	0.472	0%	0	6.0%	0.028	5.0%	0.0236	89%	0.420	2.487	0.098	2.38	0.154
BASIN C	13388	0.307	0%	0	14.0%	0.043	10.0%	0.03073	76%	0.234	2.304	0.059	1.47	0.090
BASIN D	29585	0.679	0%	0	8.0%	0.054	5.0%	0.03396	87%	0.591	2.456	0.139	3.39	0.218
BASIN E	11480	0.264	0%	0	10.0%	0.026	5.0%	0.01318	85%	0.224	2.425	0.053	1.30	0.083
DRAINS TO ROW	4811	0.110	0%	0	10.0%	0.011	10.0%	0.01104	80%	0.088	0.410	0.004	0.10	0.016
TOTAL ONSITE	184774	4.242	0%		20.9%	0.886	18.3%	0.775	61%	2.581		0.724	18.59	
ALLOWED				0.000		0.152		0.037		0.544		-0.138	4.7CFS	-0.210

Equations:

Weighted E = Ea*Aa + Eb*Ab + Ec*Ac + Ed*Ad / (Total Area)

Volume = Weighted D * Total Area

132301

Flow = Qa * Aa + Qb * Ab + Qc * Ac + Qd * Ad 179963

-47662

Where for 100-year, 6-hour storm (zone 4)

Ea= 0.8 Qa= 2.2

Eb= 1.08 Qb= 2.92

Ec= 1.46 Qc= 3.73

Ed= 2.64 Qd= 5.25

water harvet volume	67823*.341/12	1995.98	interim only- future will contain first flush
provided		2379.00	infiltrator below oulet (40.00)
		6244.29	temp pond for undeveloped tract(100-year,10-day volume)

DROP INLET CALCULATIONS

INLET	TYPE OF INLET	AREA (SF)	Q (CFS)	H (FT)	H ALLOW (FT)
B	SINGLE C	3.84	7.7	0.1734	0.5
D	SINGLE C	3.84	9.38	0.2574	0.5

ORIFICE EQUATION

Q = CA sqrt(2gH)

C = 0.6

g = 32.2

INLET B=BASIN B+C=	3.85 CFS	7.7
INLET D=BASIN D+E=	4.69 CFS	9.38

DOUBLED FLOW FOR CLOGGING FACTOR

Channel Capacity

	Top Width (ft)	Bottom Width (ft)	Depth (ft)	Area (ft^2)	WP (ft)	R	Slope (%)	Q Provided (cfs)	Q Required (cfs)	Velocity (ft/s)	
Beginning	2	2	0.5	1.00	3.00	0.3333333	2	3.38	1.30	1.30	sidewalk culvert at basin E
Beginning	1.5	1.5	0.5	0.75	2.50	0.3	2	2.36	1.47	1.96	sidewalk culvert at basin C
Beginning	10	6	0.5	4.00	10.12	0.3951357	1	10.70	5.81	1.45	retention pond overflow at basinA

Manning's Equation:

Q = 1.49/n * A * R^(2/3) * S^(1/2)

A = Area

R = D/4

S = Slope

n = 0.03

APPENDIX B

TANK VOLUMES/STAGE STORAGE/AHYMO

PROPOSED

```
*S      AHYMO - safcu
*S              POND ROUTING

START                TIME=0.0  PUNCH CODE=0


RAINFALL             TYPE=1
                     QUARTER=0.0    ONE= 2.20 IN
                     SIX= 2.90 IN   DAY= 3.70 IN   DT = 0.05 HR


COMPUTE NM HYD       ID=1  HYD NO=101  DA= .00243 SQ MI
                     PER A=00  PER B=12  PER C=6  PER D=82
                     TP=-.139 MASSRAIN=-1


PRINT HYD            ID=1  CODE=20


* ROUTE THE TOTAL FLOW THROUGH THE PROPOSED RESERVOIR
ROUTE RESERVOIR      ID=2   HYD NO=102   INFLOW=1   CODE=3
                     OUTFLOW(CFS)    STORAGE(AC-FT)    ELEV(FT)
                           0.00            0.03          39.00
                           1.30            0.06           40.00
                           1.99            0.07           40.50
                           2.49            0.08           41.00
                           2.91            0.10           41.50
                           3.28            0.11           42.00
                           3.61            0.12           42.50
                           3.91            0.13           43.00
                           4.19            0.14           43.50
                           4.45            0.15           44.00
                           4.70            0.15           44.50

                           4.93            0.16           45.00
                           5.16            0.16           45.50
                           5.37            0.17           46.00
PRINT HYD            ID=2   CODE=20


FINISH
```

```
        AHYMO PROGRAM (AHYMO-S4)                        - Version: S4.01a - Rel: 01a
             RUN DATE (MON/DAY/YR) = 06/17/2015
             START TIME (HR:MIN:SEC) = 18:40:36     USER NO.=
RioGrandeSingleA41963517
             INPUT FILE =
Settings\Owner\Desktop\2014jobs\1498-11301MONTGOMERY\interimPONROUTING061615.txt

    *S      AHYMO - safcu
    *S              POND ROUTING

    START               TIME=0.0  PUNCH CODE=0

    RAINFALL            TYPE=1
                        QUARTER=0.0    ONE= 2.20 IN
                        SIX= 2.90 IN   DAY= 3.70 IN   DT = 0.05 HR


                 6-HOUR RAINFALL DIST. - BASED ON NOAA ATLAS 14 FOR CONVECTIVE
AREAS (NM & AZ) - D1
                 DT =   0.050000 HOURS       END TIME =     6.000000 HOURS
                   0.0000  0.0047  0.0095  0.0146  0.0201  0.0259  0.0323
                   0.0415  0.0561  0.0718  0.0881  0.1056  0.1235  0.1418
                   0.1608  0.1800  0.2012  0.2234  0.2472  0.2763  0.3081
                   0.3508  0.3991  0.4587  0.5383  0.6279  0.7825  1.0229
                   1.4348  1.7243  1.9526  2.0673  2.1679  2.2402  2.2976
                   2.3477  2.3844  2.4181  2.4459  2.4701  2.4926  2.5127
                   2.5318  2.5487  2.5648  2.5804  2.5955  2.6079  2.6148
                   2.6216  2.6284  2.6346  2.6409  2.6469  2.6529  2.6588
                   2.6644  2.6699  2.6753  2.6806  2.6859  2.6909  2.6958
                   2.7007  2.7055  2.7103  2.7148  2.7194  2.7238  2.7282
                   2.7325  2.7368  2.7410  2.7452  2.7493  2.7534  2.7574
                   2.7614  2.7654  2.7692  2.7731  2.7769  2.7807  2.7844
                   2.7881  2.7917  2.7953  2.7989  2.8024  2.8059  2.8094
                   2.8128  2.8162  2.8196  2.8229  2.8262  2.8295  2.8327
                   2.8359  2.8391  2.8422  2.8453  2.8484  2.8515  2.8546
                   2.8576  2.8606  2.8635  2.8665  2.8694  2.8723  2.8751
                   2.8780  2.8808  2.8836  2.8864  2.8892  2.8919  2.8946
                   2.8973  2.9000

    COMPUTE NM HYD      ID=1  HYD NO=101  DA= .00243 SQ MI
                        PER A=00  PER B=12  PER C=6  PER D=82
                        TP=-.139 MASSRAIN=-1

             K =  0.075755HR    TP =  0.139000HR    K/TP RATIO =  0.545000     SHAPE
CONSTANT, N =  7.106428
             UNIT PEAK =   7.5443    CFS   UNIT VOLUME =   0.9972       B =   526.28
 P60 = 2.2000
             AREA =     0.001993 SQ MI    IA =   0.10000 INCHES    INF =   0.04000
INCHES PER HOUR
             RUNOFF COMPUTED BY INITIAL ABSTRACTION/INFILTRATION NUMBER METHOD - DT =
0.050000


             K =  0.131509HR    TP =  0.139000HR    K/TP RATIO =  0.946108     SHAPE
CONSTANT, N =  3.736321
```

UNIT PEAK = 1.0611 CFS UNIT VOLUME = 0.9881 B = 337.19
P60 = 2.2000
AREA = 0.000437 SQ MI IA = 0.45000 INCHES INF = 1.11000
INCHES PER HOUR
RUNOFF COMPUTED BY INITIAL ABSTRACTION/INFILTRATION NUMBER METHOD - DT =
0.050000

PRINT HYD ID=1 CODE=20

PARTIAL HYDROGRAPH 101.00

TIME HRS	FLOW CFS	TIME HRS	FLOW CFS	TIME HRS	FLOW CFS
0.000	0.0	2.000	1.2	4.000	0.1
6.000	0.1				
1.000	0.5	3.000	0.1	5.000	0.1

RUNOFF VOLUME = 2.38959 INCHES = 0.3097 ACRE-FEET
PEAK DISCHARGE RATE = 7.51 CFS AT 1.500 HOURS BASIN AREA =
0.0024 SQ. MI.

* ROUTE THE TOTAL FLOW THROUGH THE PROPOSED RESERVOIR
ROUTE RESERVOIR ID=2 HYD NO=102 INFLOW=1 CODE=3

OUTFLOW(CFS)	STORAGE(AC-FT)	ELEV(FT)
0.00	0.03	39.00
1.30	0.06	40.00
1.99	0.07	40.50
2.49	0.08	41.00
2.91	0.10	41.50
3.28	0.11	42.00
3.61	0.12	42.50
3.91	0.13	43.00
4.19	0.14	43.50
4.45	0.15	44.00
4.70	0.15	44.50
4.93	0.16	45.00
5.16	0.16	45.50
5.37	0.17	46.00

* * * * * * * * * * * * * * * * *

TIME (HRS)	INFLOW (CFS)	ELEV (FEET)	VOLUME (AC-FT)	OUTFLOW (CFS)
0.00	0.00	39.00	0.030	0.00
0.15	0.00	39.00	0.030	0.00
0.30	0.00	39.00	0.030	0.00
0.45	0.00	39.00	0.030	0.00
0.60	0.04	39.00	0.030	0.00
0.75	0.32	39.07	0.032	0.09
0.90	0.43	39.16	0.035	0.21
1.05	0.61	39.26	0.038	0.34
1.20	1.09	39.42	0.043	0.55
1.35	2.56	39.80	0.054	1.04
1.50	7.51	41.34	0.094	2.77
1.65	4.75	43.06	0.131	3.95

1.80	2.35	42.73	0.125	3.75
1.95	1.36	41.72	0.104	3.07
2.10	0.88	41.08	0.083	2.56
2.25	0.61	40.29	0.066	1.69
2.40	0.45	39.85	0.056	1.11
2.55	0.25	39.60	0.048	0.78
2.70	0.17	39.42	0.043	0.54
2.85	0.12	39.29	0.039	0.38
3.00	0.10	39.20	0.036	0.27
3.15	0.09	39.15	0.034	0.19
3.30	0.08	39.11	0.033	0.15
3.45	0.07	39.09	0.033	0.12
3.60	0.07	39.08	0.032	0.10
3.75	0.07	39.07	0.032	0.09
3.90	0.07	39.06	0.032	0.08
4.05	0.07	39.06	0.032	0.07
4.20	0.07	39.05	0.032	0.07
4.35	0.06	39.05	0.032	0.07
4.50	0.06	39.05	0.032	0.07
4.65	0.06	39.05	0.032	0.07
4.80	0.06	39.05	0.032	0.07
4.95	0.06	39.05	0.031	0.06
5.10	0.06	39.05	0.031	0.06
5.25	0.07	39.05	0.031	0.06
5.40	0.07	39.05	0.032	0.07
5.55	0.07	39.05	0.032	0.07
5.70	0.07	39.05	0.032	0.07
5.85	0.07	39.05	0.032	0.07
6.00	0.07	39.05	0.032	0.07
6.15	0.03	39.05	0.031	0.06
6.30	0.01	39.03	0.031	0.04
6.45	0.00	39.02	0.031	0.03
6.60	0.00	39.01	0.030	0.02
6.75	0.00	39.01	0.030	0.01
6.90	0.00	39.00	0.030	0.01
7.05	0.00	39.00	0.030	0.00

PEAK DISCHARGE = 3.976 CFS - PEAK OCCURS AT HOUR 1.70
MAXIMUM WATER SURFACE ELEVATION = 43.117
MAXIMUM STORAGE = 0.1323 AC-FT INCREMENTAL TIME= 0.050000HRS

PRINT HYD ID=2 CODE=20

PARTIAL HYDROGRAPH 102.00

TIME HRS	FLOW CFS	TIME HRS	FLOW CFS	TIME HRS	FLOW CFS
0.000	0.0	2.000	2.9	4.000	0.1
6.000	0.1				
1.000	0.3	3.000	0.3	5.000	0.1
7.000	0.0				

RUNOFF VOLUME = 2.38948 INCHES = 0.3097 ACRE-FEET
PEAK DISCHARGE RATE = 3.98 CFS AT 1.700 HOURS BASIN AREA = 0.0024 SQ. MI.

FINISH

NORMAL PROGRAM FINISH END TIME (HR:MIN:SEC) = 18:40:36

tank 1

Project:

StormTech
Detention · Retention · Water Quality
A division of ADS

Chamber Model -	MC-4500	
Units -	Imperial	Click Here for Metric
Number of Chambers -	14	
Number of End Caps -	2	
Voids in the stone (porosity) -	30	%
Base of Stone Elevation -	37.00	ft
Amount of Stone Above Chambers -	12	in
Amount of Stone Below Chambers -	12	in
Area of system -	692	sf Min. Area - 576 sf min. area

☑ Include Perimeter Stone in Calculations

Height of System (inches)	Incremental Single Chamber (cubic feet)	Incremental Single End Cap (cubic feet)	Incremental Chambers (cubic feet)	Incremental End Cap (cubic feet)	Incremental Stone (cubic feet)	Incremental Ch, EC and Stone (cubic feet)	Cumulative System (cubic feet)	Elevation (feet)
84	0.00	0.00	0.00	0.00	17.30	17.30	2546.96	44.00
83	0.00	0.00	0.00	0.00	17.30	17.30	2529.66	43.92
82	0.00	0.00	0.00	0.00	17.30	17.30	2512.36	43.83
81	0.00	0.00	0.00	0.00	17.30	17.30	2495.06	43.75
80	0.00	0.00	0.00	0.00	17.30	17.30	2477.76	43.67
79	0.00	0.00	0.00	0.00	17.30	17.30	2460.46	43.58
78	0.00	0.00	0.00	0.00	17.30	17.30	2443.16	43.50
77	0.00	0.00	0.00	0.00	17.30	17.30	2425.86	43.42
76	0.00	0.00	0.00	0.00	17.30	17.30	2408.56	43.33
75	0.00	0.00	0.00	0.00	17.30	17.30	2391.26	43.25
74	0.00	0.00	0.00	0.00	17.30	17.30	2373.96	43.17
73	0.00	0.00	0.00	0.00	17.30	17.30	2356.66	43.08
72	0.04	0.00	0.57	0.00	17.13	17.70	2339.36	43.00
71	0.12	0.01	1.63	0.02	16.81	18.45	2321.66	42.92
70	0.16	0.03	2.31	0.05	16.59	18.95	2303.20	42.83
69	0.21	0.05	2.92	0.10	16.39	19.41	2284.25	42.75
68	0.27	0.07	3.76	0.14	16.13	20.02	2264.84	42.67
67	0.45	0.09	6.34	0.18	15.35	21.86	2244.82	42.58
66	0.67	0.11	9.31	0.23	14.44	23.98	2222.96	42.50
65	0.80	0.14	11.19	0.28	13.86	25.33	2198.98	42.42
64	0.91	0.17	12.71	0.34	13.39	26.43	2173.65	42.33
63	1.00	0.19	14.04	0.38	12.97	27.40	2147.22	42.25
62	1.09	0.22	15.22	0.43	12.60	28.26	2119.82	42.17
61	1.16	0.24	16.29	0.48	12.27	29.04	2091.56	42.08
60	1.23	0.27	17.28	0.54	11.96	29.77	2062.52	42.00
59	1.30	0.30	18.20	0.60	11.66	30.45	2032.75	41.92
58	1.36	0.32	19.05	0.65	11.39	31.09	2002.30	41.83
57	1.42	0.35	19.86	0.70	11.13	31.69	1971.21	41.75
56	1.47	0.37	20.63	0.74	10.89	32.26	1939.51	41.67
55	1.53	0.39	21.35	0.79	10.66	32.80	1907.26	41.58
54	1.57	0.42	22.04	0.83	10.44	33.31	1874.46	41.50
53	1.62	0.44	22.70	0.88	10.23	33.81	1841.14	41.42
52	1.67	0.46	23.33	0.93	10.02	34.28	1807.34	41.33
51	1.71	0.48	23.93	0.97	9.83	34.73	1773.06	41.25
50	1.75	0.50	24.50	1.01	9.65	35.16	1738.33	41.17
49	1.79	0.53	25.05	1.05	9.47	35.57	1703.18	41.08
48	1.83	0.55	25.58	1.09	9.30	35.97	1667.61	41.00
47	1.86	0.56	26.09	1.13	9.13	36.35	1631.64	40.92
46	1.90	0.58	26.58	1.17	8.98	36.72	1595.28	40.83
45	1.93	0.60	27.05	1.20	8.83	37.07	1558.56	40.75
44	1.96	0.62	27.50	1.24	8.68	37.42	1521.49	40.67
43	2.00	0.64	27.93	1.28	8.54	37.75	1484.07	40.58
42	2.03	0.66	28.35	1.31	8.40	38.06	1446.33	40.50
41	2.05	0.67	28.75	1.35	8.27	38.37	1408.27	40.42
40	2.08	0.69	29.14	1.38	8.14	38.67	1369.90	40.33
39	2.11	0.71	29.51	1.41	8.02	38.95	1331.23	40.25
38	2.13	0.72	29.87	1.45	7.90	39.23	1292.28	40.17
37	2.16	0.74	30.22	1.48	7.79	39.49	1253.06	40.08
36	2.18	0.76	30.56	1.51	7.68	39.75	1213.57	40.00
35	2.21	0.77	30.88	1.54	7.57	39.99	1173.82	39.92
34	2.23	0.79	31.19	1.57	7.47	40.23	1133.82	39.83
33	2.25	0.80	31.48	1.60	7.37	40.46	1093.59	39.75
32	2.27	0.82	31.77	1.64	7.28	40.69	1053.13	39.67
31	2.29	0.84	32.05	1.68	7.18	40.91	1012.44	39.58
30	2.31	0.85	32.31	1.69	7.10	41.10	971.53	39.50
29	2.33	0.86	32.56	1.72	7.02	41.30	930.43	39.42
28	2.34	0.87	32.81	1.74	6.93	41.49	889.13	39.33
27	2.36	0.89	33.04	1.77	6.86	41.67	847.65	39.25
26	2.38	0.90	33.26	1.80	6.78	41.84	805.98	39.17
25	2.39	0.91	33.47	1.82	6.71	42.01	764.14	39.08
24	2.41	0.92	33.68	1.84	6.64	42.16	722.14	39.00
23	2.42	0.93	33.87	1.87	6.58	42.32	679.97	38.92
22	2.43	0.95	34.05	1.89	6.52	42.46	637.66	38.83
21	2.44	0.96	34.23	1.91	6.46	42.60	595.19	38.75
20	2.46	0.97	34.39	1.93	6.40	42.73	552.60	38.67
19	2.47	0.98	34.55	1.96	6.35	42.85	509.87	38.58

tank 2

Project:

StormTech
Detention • Retention • Water Quality
A division of ADS

Chamber Model -	MC-4500	
Units -	Imperial	Click Here for Metric
Number of Chambers -	24	
Number of End Caps -	2	
Voids in the stone (porosity) -	30	%
Base of Stone Elevation -	38.00	ft
Amount of Stone Above Chambers -	12	in
Amount of Stone Below Chambers -	12	in
Area of system -	1086	sf Min. Area - 942 sf min. area

☑ Include Perimeter Stone in Calculations

Height of System (inches)	Incremental Single Chamber (cubic feet)	Incremental Single End Cap (cubic feet)	Incremental Chambers (cubic feet)	Incremental End Cap (cubic feet)	Incremental Stone (cubic feet)	Incremental Ch, EC and Stone (cubic feet)	Cumulative System (cubic feet)	Elevation (feet)
84	0.00	0.00	0.00	0.00	27.15	27.15	4119.90	45.00
83	0.00	0.00	0.00	0.00	27.15	27.15	4092.75	44.92
82	0.00	0.00	0.00	0.00	27.15	27.15	4065.60	44.83
81	0.00	0.00	0.00	0.00	27.15	27.15	4038.45	44.75
80	0.00	0.00	0.00	0.00	27.15	27.15	4011.30	44.67
79	0.00	0.00	0.00	0.00	27.15	27.15	3984.15	44.58
78	0.00	0.00	0.00	0.00	27.15	27.15	3957.00	44.50
77	0.00	0.00	0.00	0.00	27.15	27.15	3929.85	44.42
76	0.00	0.00	0.00	0.00	27.15	27.15	3902.70	44.33
75	0.00	0.00	0.00	0.00	27.15	27.15	3875.55	44.25
74	0.00	0.00	0.00	0.00	27.15	27.15	3848.40	44.17
73	0.00	0.00	0.00	0.00	27.15	27.15	3821.25	44.08
72	0.04	0.00	0.98	0.00	26.86	27.84	3794.10	44.00
71	0.12	0.01	2.79	0.02	26.31	29.11	3766.26	43.92
70	0.16	0.03	3.95	0.05	25.95	29.95	3737.15	43.83
69	0.21	0.05	5.01	0.10	25.62	30.72	3707.20	43.75
68	0.27	0.07	6.44	0.14	25.18	31.75	3676.47	43.67
67	0.45	0.09	10.87	0.18	23.84	34.88	3644.72	43.58
66	0.67	0.11	15.97	0.23	22.29	38.48	3609.84	43.50
65	0.80	0.14	19.18	0.28	21.31	40.77	3571.36	43.42
64	0.91	0.17	21.80	0.34	20.51	42.64	3530.58	43.33
63	1.00	0.19	24.07	0.38	19.81	44.27	3487.94	43.25
62	1.09	0.22	26.10	0.43	19.19	45.72	3443.68	43.17
61	1.16	0.24	27.92	0.48	18.63	47.03	3397.96	43.08
60	1.23	0.27	29.62	0.54	18.10	48.26	3350.92	43.00
59	1.30	0.30	31.19	0.60	17.61	49.40	3302.66	42.92
58	1.36	0.32	32.66	0.65	17.16	50.47	3253.26	42.83
57	1.42	0.35	34.05	0.70	16.73	51.47	3202.79	42.75
56	1.47	0.37	35.36	0.74	16.32	52.42	3151.32	42.67
55	1.53	0.39	36.60	0.79	15.93	53.32	3098.90	42.58
54	1.57	0.42	37.79	0.83	15.56	54.19	3045.58	42.50
53	1.62	0.44	38.91	0.88	15.21	55.01	2991.39	42.42
52	1.67	0.46	39.99	0.93	14.88	55.79	2936.39	42.33
51	1.71	0.48	41.02	0.97	14.55	56.54	2880.60	42.25
50	1.75	0.50	42.00	1.01	14.25	57.26	2824.05	42.17
49	1.79	0.53	42.94	1.05	13.95	57.95	2766.80	42.08
48	1.83	0.55	43.85	1.09	13.67	58.61	2708.85	42.00
47	1.86	0.56	44.72	1.13	13.39	59.25	2650.24	41.92
46	1.90	0.58	45.56	1.17	13.13	59.86	2590.99	41.83
45	1.93	0.60	46.36	1.20	12.88	60.45	2531.14	41.75
44	1.96	0.62	47.14	1.24	12.64	61.01	2470.69	41.67
43	2.00	0.64	47.88	1.28	12.40	61.56	2409.67	41.58
42	2.03	0.66	48.60	1.31	12.18	62.09	2348.11	41.50
41	2.05	0.67	49.29	1.35	11.96	62.60	2286.03	41.42
40	2.08	0.69	49.96	1.38	11.75	63.09	2223.43	41.33
39	2.11	0.71	50.59	1.41	11.55	63.56	2160.34	41.25
38	2.13	0.72	51.21	1.45	11.35	64.01	2096.79	41.17
37	2.16	0.74	51.81	1.48	11.16	64.45	2032.78	41.08
36	2.18	0.76	52.38	1.51	10.98	64.88	1968.32	41.00
35	2.21	0.77	52.93	1.54	10.81	65.28	1903.45	40.92
34	2.23	0.79	53.46	1.57	10.64	65.68	1838.17	40.83
33	2.25	0.80	53.97	1.60	10.48	66.05	1772.49	40.75
32	2.27	0.82	54.46	1.64	10.32	66.42	1706.44	40.67
31	2.29	0.84	54.94	1.68	10.16	66.78	1640.01	40.58
30	2.31	0.85	55.39	1.69	10.03	67.11	1573.23	40.50
29	2.33	0.86	55.82	1.72	9.89	67.43	1506.12	40.42
28	2.34	0.87	56.24	1.74	9.76	67.74	1438.70	40.33
27	2.36	0.89	56.64	1.77	9.63	68.04	1370.96	40.25
26	2.38	0.90	57.02	1.80	9.51	68.32	1302.92	40.17
25	2.39	0.91	57.38	1.82	9.39	68.59	1234.60	40.08
24	2.41	0.92	57.73	1.84	9.28	68.85	1166.01	40.00
23	2.42	0.93	58.06	1.87	9.17	69.10	1097.15	39.92
22	2.43	0.95	58.38	1.89	9.07	69.34	1028.05	39.83
21	2.44	0.96	58.68	1.91	8.97	69.56	958.72	39.75
20	2.46	0.97	58.96	1.93	8.88	69.78	889.15	39.67
19	2.47	0.98	59.23	1.96	8.80	69.98	819.38	39.58

1706.44	40.67	1521.49	40.67	3227.93	
1640.01	40.58	1484.07	40.58	3124.09	
1573.23	40.50	1446.33	40.50	3019.56	40.5
1506.12	40.42	1408.27	40.42	2914.39	
1438.70	40.33	1369.90	40.33	2808.59	
1370.96	40.25	1331.23	40.25	2702.19	
1302.92	40.17	1292.28	40.17	2595.20	
1234.60	40.08	1253.06	40.08	2487.66	
1166.01	40.00	1213.57	40.00	2379.57	40
1097.15	39.92	1173.82	39.92	2270.97	
1028.05	39.83	1133.82	39.83	2161.88	
958.72	39.75	1093.59	39.75	2052.31	
889.15	39.67	1053.13	39.67	1942.28	
819.38	39.58	1012.44	39.58	1831.82	
749.40	39.50	971.53	39.50	1720.93	39.5
679.23	39.42	930.43	39.42	1609.66	
608.88	39.33	889.13	39.33	1498.02	
538.36	39.25	847.65	39.25	1386.01	
467.68	39.17	805.98	39.17	1273.66	
396.85	39.08	764.14	39.08	1160.99	
325.80	39.00	722.14	39.00	1047.94	39
298.65	38.92	679.97	38.92	978.62	
271.50	38.83	637.66	38.83	909.16	
244.35	38.75	595.19	38.75	839.54	
217.20	38.67	552.60	38.67	769.80	
190.05	38.58	509.87	38.58	699.92	
162.90	38.50	467.01	38.50	629.91	38.5
135.75	38.42	424.04	38.42	559.79	
108.60	38.33	380.96	38.33	489.56	
81.45	38.25	337.77	38.25	419.22	
54.30	38.17	294.49	38.17	348.79	
27.15	38.08	251.11	38.08	278.26	
		207.60	38.00	207.60	38
		190.30	37.92	190.30	
		173.00	37.83	173.00	
		155.70	37.75	155.70	
		138.40	37.67	138.40	
		121.10	37.58	121.10	
		103.80	37.50	103.80	37.5
		86.50	37.42	86.50	
		69.20	37.33	69.20	
		51.90	37.25	51.90	
		34.60	37.17	34.60	
		17.30	37.08	17.30	

tank 3	tank 2		tank 1		cumulative	
	4149.90		2600.96		6750.86	45.5
	4144.90		2597.96		6742.86	
	4139.90		2594.96		6734.86	
	4134.90		2591.96		6726.86	
	4129.90		2588.96		6718.86	
	4124.90		2585.96		6710.86	
	4119.90	45.00	2582.96		6702.86	45
	4092.75	44.92	2579.96		6672.71	
	4065.60	44.83	2576.96		6642.56	
	4038.45	44.75	2573.96		6612.41	
	4011.30	44.67	2570.96		6582.26	
	3984.15	44.58	2567.96		6552.11	
	3957.00	44.50	2564.96		6521.96	44.5
	3929.85	44.42	2561.96		6491.81	
	3902.70	44.33	2558.96		6461.66	
	3875.55	44.25	2555.96		6431.51	
	3848.40	44.17	2552.96		6401.36	
	3821.25	44.08	2549.96		6371.21	
	3794.10	44.00	2546.96	44.00	6341.06	44
	3766.26	43.92	2529.66	43.92	6295.92	
	3737.15	43.83	2512.36	43.83	6249.51	
	3707.20	43.75	2495.06	43.75	6202.25	
	3676.47	43.67	2477.76	43.67	6154.23	
	3644.72	43.58	2460.46	43.58	6105.18	
	3609.84	43.50	2443.16	43.50	6053.00	43.5
	3571.36	43.42	2425.86	43.42	5997.21	
	3530.58	43.33	2408.56	43.33	5939.14	
	3487.94	43.25	2391.26	43.25	5879.20	
	3443.68	43.17	2373.96	43.17	5817.63	
	3397.96	43.08	2356.66	43.08	5754.61	
	3350.92	43.00	2339.36	43.00	5690.28	43
	3302.66	42.92	2321.66	42.92	5624.32	
	3253.26	42.83	2303.20	42.83	5556.47	
	3202.79	42.75	2284.25	42.75	5487.05	
	3151.32	42.67	2264.84	42.67	5416.16	
	3098.90	42.58	2244.82	42.58	5343.72	
	3045.58	42.50	2222.96	42.50	5268.53	42.5
	2991.39	42.42	2198.98	42.42	5190.37	
	2936.39	42.33	2173.65	42.33	5110.03	
	2880.60	42.25	2147.22	42.25	5027.81	
	2824.05	42.17	2119.82	42.17	4943.87	
	2766.80	42.08	2091.56	42.08	4858.36	
	2708.85	42.00	2062.52	42.00	4771.37	42
	2650.24	41.92	2032.75	41.92	4682.99	
	2590.99	41.83	2002.30	41.83	4593.29	
	2531.14	41.75	1971.21	41.75	4502.34	
	2470.69	41.67	1939.51	41.67	4410.20	
	2409.67	41.58	1907.26	41.58	4316.93	
	2348.11	41.50	1874.46	41.50	4222.57	41.5
	2286.03	41.42	1841.14	41.42	4127.17	
	2223.43	41.33	1807.34	41.33	4030.77	
	2160.34	41.25	1773.06	41.25	3933.40	
	2096.79	41.17	1738.33	41.17	3835.12	
	2032.78	41.08	1703.18	41.08	3735.95	
	1968.32	41.00	1667.61	41.00	3635.93	41
	1903.45	40.92	1631.64	40.92	3535.09	
	1838.17	40.83	1595.28	40.83	3433.45	
	1772.49	40.75	1558.56	40.75	3331.05	

VOLUME CALCULATIONS

ACTUAL ELEV.	DEPTH (FT)	VOLUME (AC-FT)	Q (CFS)
39	0	0.025	0.01
40	0.75	0.055	1.30
40.5	1.25	0.070	1.99
41	1.75	0.084	2.49
41.5	2.25	0.098	2.91
42	2.75	0.111	3.28
42.5	3.25	0.122	3.61
43	3.75	0.131	3.91
43.5	4.25	0.140	4.19
44	4.75	0.147	4.45
44.5	5.25	0.152	4.70
45	5.75	0.155	4.93
45.5	6.25	0.156	5.16
46	6.75	0.165	5.37

<u>Orifice Equation</u>

Q = CA SQRT(2gH)

C =	0.6
Diameter (in)	9
Area (ft^2)=	0.44178647
g =	32.2
H (Ft) =	Depth of water above center of orifice
Q (CFS)=	Flow

APPENDIX C

TANK VOLUMES/STAGE STORAGE/AHYMO

FUTURE

ult.


```
*S      AHYMO - safcu
*S              POND ROUTING

START                TIME=0.0  PUNCH CODE=0


RAINFALL             TYPE=1
                     QUARTER=0.0    ONE= 2.20 IN
                     SIX= 2.90 IN   DAY= 3.70 IN   DT = 0.05 HR


COMPUTE NM HYD       ID=1  HYD NO=101  DA= .00468 SQ MI
                     PER A=00  PER B=12  PER C=6  PER D=82
                     TP=-.139 MASSRAIN=-1


PRINT HYD            ID=1  CODE=20


* ROUTE THE TOTAL FLOW THROUGH THE PROPOSED RESERVOIR
ROUTE RESERVOIR      ID=2   HYD NO=102   INFLOW=1   CODE=3
                     OUTFLOW(CFS)    STORAGE(AC-FT)    ELEV(FT)
                           0.00            0.03          39.00
                           1.30            0.08          40.00
                           1.99            0.11          40.50
                           2.49            0.14          41.00
                           2.91            0.16          41.50
                           3.28            0.19          42.00
                           3.61            0.21          42.50
                           3.91            0.23          43.00
                           4.19            0.25          43.50
                           4.45            0.26          44.00
                           4.70            0.27          44.50

                           4.93            0.28          45.00
                           5.16            0.29          45.50
                           5.37            0.31          46.00
PRINT HYD            ID=2   CODE=20


FINISH
```

```
        AHYMO PROGRAM (AHYMO-S4)                        - Version: S4.01a - Rel: 01a
             RUN DATE (MON/DAY/YR) = 06/17/2015
             START TIME (HR:MIN:SEC) = 18:15:31     USER NO.=
RioGrandeSingleA41963517
             INPUT FILE = ts and
Settings\Owner\Desktop\2014jobs\1498-11301MONTGOMERY\PONROUTING061615.txt

    *S      AHYMO - safcu
    *S              POND ROUTING

    START                TIME=0.0  PUNCH CODE=0

    RAINFALL             TYPE=1
                         QUARTER=0.0    ONE= 2.20 IN
                         SIX= 2.90 IN   DAY= 3.70 IN   DT = 0.05 HR


                    6-HOUR RAINFALL DIST. - BASED ON NOAA ATLAS 14 FOR CONVECTIVE
AREAS (NM & AZ) - D1
                    DT =   0.050000 HOURS       END TIME =     6.000000 HOURS
                      0.0000  0.0047  0.0095  0.0146  0.0201  0.0259  0.0323
                      0.0415  0.0561  0.0718  0.0881  0.1056  0.1235  0.1418
                      0.1608  0.1800  0.2012  0.2234  0.2472  0.2763  0.3081
                      0.3508  0.3991  0.4587  0.5383  0.6279  0.7825  1.0229
                      1.4348  1.7243  1.9526  2.0673  2.1679  2.2402  2.2976
                      2.3477  2.3844  2.4181  2.4459  2.4701  2.4926  2.5127
                      2.5318  2.5487  2.5648  2.5804  2.5955  2.6079  2.6148
                      2.6216  2.6284  2.6346  2.6409  2.6469  2.6529  2.6588
                      2.6644  2.6699  2.6753  2.6806  2.6859  2.6909  2.6958
                      2.7007  2.7055  2.7103  2.7148  2.7194  2.7238  2.7282
                      2.7325  2.7368  2.7410  2.7452  2.7493  2.7534  2.7574
                      2.7614  2.7654  2.7692  2.7731  2.7769  2.7807  2.7844
                      2.7881  2.7917  2.7953  2.7989  2.8024  2.8059  2.8094
                      2.8128  2.8162  2.8196  2.8229  2.8262  2.8295  2.8327
                      2.8359  2.8391  2.8422  2.8453  2.8484  2.8515  2.8546
                      2.8576  2.8606  2.8635  2.8665  2.8694  2.8723  2.8751
                      2.8780  2.8808  2.8836  2.8864  2.8892  2.8919  2.8946
                      2.8973  2.9000

    COMPUTE NM HYD       ID=1  HYD NO=101  DA= .00468 SQ MI
                         PER A=00  PER B=12  PER C=6  PER D=82
                         TP=-.139 MASSRAIN=-1

             K =  0.075755HR    TP =  0.139000HR    K/TP RATIO =  0.545000     SHAPE
CONSTANT, N =  7.106428
             UNIT PEAK =   14.530    CFS   UNIT VOLUME =   0.9978       B =   526.28
 P60 = 2.2000
             AREA =     0.003838 SQ MI    IA =   0.10000 INCHES    INF =   0.04000
INCHES PER HOUR
             RUNOFF COMPUTED BY INITIAL ABSTRACTION/INFILTRATION NUMBER METHOD - DT =
0.050000


             K =  0.131509HR    TP =  0.139000HR    K/TP RATIO =  0.946108     SHAPE
CONSTANT, N =  3.736321
```

UNIT PEAK = 2.0435 CFS UNIT VOLUME = 0.9950 B = 337.19
P60 = 2.2000
AREA = 0.000842 SQ MI IA = 0.45000 INCHES INF = 1.11000
INCHES PER HOUR
RUNOFF COMPUTED BY INITIAL ABSTRACTION/INFILTRATION NUMBER METHOD - DT =
0.050000

PRINT HYD ID=1 CODE=20

PARTIAL HYDROGRAPH 101.00

TIME HRS	FLOW CFS	TIME HRS	FLOW CFS	TIME HRS	FLOW CFS
0.000	0.0	2.000	2.2	4.000	0.1
6.000	0.1				
1.000	1.0	3.000	0.2	5.000	0.1

RUNOFF VOLUME = 2.38959 INCHES = 0.5964 ACRE-FEET
PEAK DISCHARGE RATE = 14.45 CFS AT 1.500 HOURS BASIN AREA =
0.0047 SQ. MI.

* ROUTE THE TOTAL FLOW THROUGH THE PROPOSED RESERVOIR
ROUTE RESERVOIR ID=2 HYD NO=102 INFLOW=1 CODE=3

OUTFLOW(CFS)	STORAGE(AC-FT)	ELEV(FT)
0.00	0.03	39.00
1.30	0.08	40.00
1.99	0.11	40.50
2.49	0.14	41.00
2.91	0.16	41.50
3.28	0.19	42.00
3.61	0.21	42.50
3.91	0.23	43.00
4.19	0.25	43.50
4.45	0.26	44.00
4.70	0.27	44.50
4.93	0.28	45.00
5.16	0.29	45.50
5.37	0.31	46.00

* * * * * * * * * * * * * * * * *

TIME (HRS)	INFLOW (CFS)	ELEV (FEET)	VOLUME (AC-FT)	OUTFLOW (CFS)
0.00	0.00	39.00	0.030	0.00
0.15	0.00	39.00	0.030	0.00
0.30	0.00	39.00	0.030	0.00
0.45	0.00	39.00	0.030	0.00
0.60	0.08	39.00	0.030	0.00
0.75	0.61	39.08	0.034	0.11
0.90	0.83	39.21	0.041	0.28
1.05	1.18	39.36	0.048	0.47
1.20	2.10	39.61	0.060	0.79
1.35	4.92	40.11	0.087	1.45
1.50	14.45	41.84	0.180	3.16
1.65	9.14	45.23	0.285	5.03

1.80	4.52	45.76	0.300	5.27
1.95	2.62	44.97	0.279	4.92
2.10	1.69	43.48	0.249	4.18
2.25	1.18	42.69	0.218	3.72
2.40	0.87	41.95	0.187	3.24
2.55	0.48	41.43	0.157	2.85
2.70	0.34	40.84	0.130	2.33
2.85	0.26	40.46	0.108	1.94
3.00	0.21	40.15	0.089	1.51
3.15	0.17	39.90	0.075	1.17
3.30	0.16	39.69	0.064	0.89
3.45	0.14	39.53	0.056	0.69
3.60	0.14	39.41	0.051	0.54
3.75	0.13	39.33	0.046	0.43
3.90	0.13	39.27	0.043	0.34
4.05	0.13	39.22	0.041	0.29
4.20	0.13	39.19	0.039	0.24
4.35	0.12	39.16	0.038	0.21
4.50	0.12	39.14	0.037	0.19
4.65	0.12	39.13	0.037	0.17
4.80	0.12	39.12	0.036	0.16
4.95	0.12	39.11	0.036	0.15
5.10	0.12	39.11	0.035	0.14
5.25	0.13	39.11	0.035	0.14
5.40	0.13	39.10	0.035	0.13
5.55	0.13	39.10	0.035	0.13
5.70	0.13	39.10	0.035	0.13
5.85	0.13	39.10	0.035	0.13
6.00	0.13	39.10	0.035	0.13
6.15	0.06	39.10	0.035	0.12
6.30	0.02	39.08	0.034	0.10
6.45	0.01	39.06	0.033	0.08
6.60	0.00	39.04	0.032	0.06
6.75	0.00	39.03	0.032	0.04
6.90	0.00	39.02	0.031	0.03
7.05	0.00	39.02	0.031	0.02
7.20	0.00	39.01	0.031	0.02
7.35	0.00	39.01	0.030	0.01
7.50	0.00	39.01	0.030	0.01
7.65	0.00	39.00	0.030	0.01
7.80	0.00	39.00	0.030	0.00

PEAK DISCHARGE = 5.278 CFS - PEAK OCCURS AT HOUR 1.75
MAXIMUM WATER SURFACE ELEVATION = 45.781
MAXIMUM STORAGE = 0.3013 AC-FT INCREMENTAL TIME= 0.050000HRS

PRINT HYD ID=2 CODE=20

PARTIAL HYDROGRAPH 102.00

TIME HRS	TIME FLOW CFS	FLOW	TIME HRS	TIME FLOW CFS	FLOW	TIME HRS	TIME FLOW CFS	FLOW
0.000	0.0		2.000	4.7		4.000	0.3	
6.000	0.1		8.000	0.0				
1.000	0.4		3.000	1.5		5.000	0.1	
7.000	0.0							

RUNOFF VOLUME = 2.38953 INCHES = 0.5964 ACRE-FEET
PEAK DISCHARGE RATE = 5.28 CFS AT 1.750 HOURS BASIN AREA = 0.0047 SQ. MI.

```
FINISH
    NORMAL PROGRAM FINISH          END TIME (HR:MIN:SEC) = 18:15:31
```

Tank3

Project:

StormTech
Detention • Retention • Water Quality
A division of ADS

Chamber Model -	MC-4500	
Units -	Imperial	(Click Here for Metric)
Number of Chambers -	24	
Number of End Caps -	2	
Voids in the stone (porosity) -	30	%
Base of Stone Elevation -	38.00	ft
Amount of Stone Above Chambers -	12	in
Amount of Stone Below Chambers -	12	in
Area of system -	1086	sf Min. Area - 942 sf min. area

☑ Include Perimeter Stone in Calculations

Height of System (inches)	Incremental Single Chamber (cubic feet)	Incremental Single End Cap (cubic feet)	Incremental Chambers (cubic feet)	Incremental End Cap (cubic feet)	Incremental Stone (cubic feet)	Incremental Ch, EC and Stone (cubic feet)	Cumulative System (cubic feet)	Elevation (feet)
84	0.00	0.00	0.00	0.00	27.15	27.15	4119.90	45.00
83	0.00	0.00	0.00	0.00	27.15	27.15	4092.75	44.92
82	0.00	0.00	0.00	0.00	27.15	27.15	4065.60	44.83
81	0.00	0.00	0.00	0.00	27.15	27.15	4038.45	44.75
80	0.00	0.00	0.00	0.00	27.15	27.15	4011.30	44.67
79	0.00	0.00	0.00	0.00	27.15	27.15	3984.15	44.58
78	0.00	0.00	0.00	0.00	27.15	27.15	3957.00	44.50
77	0.00	0.00	0.00	0.00	27.15	27.15	3929.85	44.42
76	0.00	0.00	0.00	0.00	27.15	27.15	3902.70	44.33
75	0.00	0.00	0.00	0.00	27.15	27.15	3875.55	44.25
74	0.00	0.00	0.00	0.00	27.15	27.15	3848.40	44.17
73	0.00	0.00	0.00	0.00	27.15	27.15	3821.25	44.08
72	0.04	0.00	0.98	0.00	26.86	27.84	3794.10	44.00
71	0.12	0.01	2.79	0.02	26.31	29.11	3766.26	43.92
70	0.16	0.03	3.95	0.05	25.95	29.95	3737.15	43.83
69	0.21	0.05	5.01	0.10	25.62	30.72	3707.20	43.75
68	0.27	0.07	6.44	0.14	25.18	31.75	3676.47	43.67
67	0.45	0.09	10.87	0.18	23.84	34.88	3644.72	43.58
66	0.67	0.11	15.97	0.23	22.29	38.48	3609.84	43.50
65	0.80	0.14	19.18	0.28	21.31	40.77	3571.36	43.42
64	0.91	0.17	21.80	0.34	20.61	42.64	3530.58	43.33
63	1.00	0.19	24.07	0.38	19.81	44.27	3487.94	43.25
62	1.09	0.22	26.10	0.43	19.19	45.72	3443.68	43.17
61	1.16	0.24	27.92	0.48	18.63	47.03	3397.96	43.08
60	1.23	0.27	29.62	0.54	18.10	48.26	3350.92	43.00
59	1.30	0.30	31.19	0.60	17.61	49.40	3302.66	42.92
58	1.36	0.32	32.66	0.65	17.16	50.47	3253.26	42.83
57	1.42	0.35	34.05	0.70	16.73	51.47	3202.79	42.75
56	1.47	0.37	35.36	0.74	16.32	52.42	3151.32	42.67
55	1.53	0.39	36.60	0.79	15.93	53.32	3098.90	42.58
54	1.57	0.42	37.79	0.83	15.56	54.19	3045.58	42.50
53	1.62	0.44	38.91	0.88	15.21	55.01	2991.39	42.42
52	1.67	0.46	39.99	0.93	14.88	55.79	2936.39	42.33
51	1.71	0.48	41.02	0.97	14.55	56.54	2880.60	42.25
50	1.75	0.50	42.00	1.01	14.25	57.26	2824.05	42.17
49	1.79	0.53	42.94	1.05	13.95	57.95	2766.80	42.08
48	1.83	0.55	43.85	1.09	13.67	58.61	2708.85	42.00
47	1.86	0.56	44.72	1.13	13.39	59.25	2650.24	41.92
46	1.90	0.58	45.56	1.17	13.13	59.86	2590.99	41.83
45	1.93	0.60	46.36	1.20	12.88	60.45	2531.14	41.75
44	1.96	0.62	47.14	1.24	12.64	61.01	2470.69	41.67
43	2.00	0.64	47.88	1.28	12.40	61.56	2409.67	41.58
42	2.03	0.66	48.60	1.31	12.18	62.09	2348.11	41.50
41	2.05	0.67	49.29	1.35	11.98	62.60	2286.03	41.42
40	2.08	0.69	49.96	1.38	11.75	63.09	2223.43	41.33
39	2.11	0.71	50.59	1.41	11.55	63.56	2160.34	41.25
38	2.13	0.72	51.21	1.45	11.35	64.01	2096.79	41.17
37	2.16	0.74	51.81	1.48	11.16	64.45	2032.78	41.08
36	2.18	0.76	52.38	1.51	10.98	64.88	1968.32	41.00
35	2.21	0.77	52.93	1.54	10.81	65.28	1903.45	40.92
34	2.23	0.79	53.46	1.57	10.64	65.68	1838.17	40.83
33	2.25	0.80	53.97	1.60	10.48	66.05	1772.49	40.75
32	2.27	0.82	54.46	1.64	10.32	66.42	1706.44	40.67
31	2.29	0.84	54.94	1.68	10.16	66.78	1640.01	40.58
30	2.31	0.85	55.39	1.69	10.03	67.11	1573.23	40.50
29	2.33	0.86	55.82	1.72	9.89	67.43	1506.12	40.42
28	2.34	0.87	56.24	1.74	9.76	67.74	1438.70	40.33
27	2.36	0.89	56.64	1.77	9.63	68.04	1370.96	40.25
26	2.38	0.90	57.02	1.80	9.51	68.32	1302.92	40.17
25	2.39	0.91	57.38	1.82	9.39	68.59	1234.60	40.08
24	2.41	0.92	57.73	1.84	9.28	68.85	1166.01	40.00
23	2.42	0.93	58.06	1.87	9.17	69.10	1097.15	39.92
22	2.43	0.95	58.38	1.89	9.07	69.34	1028.06	39.83
21	2.44	0.96	58.68	1.91	8.97	69.56	958.72	39.75
20	2.46	0.97	58.96	1.93	8.88	69.78	889.15	39.67
19	2.47	0.98	59.23	1.96	8.80	69.98	819.38	39.58

Tank 2

Project:

StormTech
Detention • Retention • Water Quality
A division of ADS

Chamber Model -	MC-4500	
Units -	Imperial	Click Here for Metric
Number of Chambers -	34	
Number of End Caps -	2	
Voids in the stone (porosity) -	30	%
Base of Stone Elevation -	38.50	ft
Amount of Stone Above Chambers -	12	in
Amount of Stone Below Chambers -	12	in
Area of system -	1500	sf Min. Area - 1308 sf min. area

☑ Include Perimeter Stone in Calculations

Height of System (inches)	Incremental Single Chamber (cubic feet)	Incremental Single End Cap (cubic feet)	Incremental Chambers (cubic feet)	Incremental End Cap (cubic feet)	Incremental Stone (cubic feet)	Incremental Ch, EC and Stone (cubic feet)	Cumulative System (cubic feet)	Elevation (feet)
84	0.00	0.00	0.00	0.00	37.50	37.50	5734.85	45.50
83	0.00	0.00	0.00	0.00	37.50	37.50	5697.35	45.42
82	0.00	0.00	0.00	0.00	37.50	37.50	5659.85	45.33
81	0.00	0.00	0.00	0.00	37.50	37.50	5622.35	45.25
80	0.00	0.00	0.00	0.00	37.50	37.50	5584.85	45.17
79	0.00	0.00	0.00	0.00	37.50	37.50	5547.35	45.08
78	0.00	0.00	0.00	0.00	37.50	37.50	5509.85	45.00
77	0.00	0.00	0.00	0.00	37.50	37.50	5472.35	44.92
76	0.00	0.00	0.00	0.00	37.50	37.50	5434.85	44.83
75	0.00	0.00	0.00	0.00	37.50	37.50	5397.35	44.75
74	0.00	0.00	0.00	0.00	37.50	37.50	5359.85	44.67
73	0.00	0.00	0.00	0.00	37.50	37.50	5322.35	44.58
72	0.04	0.00	1.39	0.00	37.08	38.48	5284.85	44.50
71	0.12	0.01	3.95	0.02	36.31	40.28	5246.37	44.42
70	0.16	0.03	5.60	0.05	35.80	41.46	5206.10	44.33
69	0.21	0.05	7.10	0.10	35.34	42.53	5164.64	44.25
68	0.27	0.07	9.12	0.14	34.72	43.98	5122.11	44.17
67	0.45	0.09	15.39	0.18	32.83	48.40	5078.12	44.08
66	0.67	0.11	22.62	0.23	30.65	53.49	5029.72	44.00
65	0.80	0.14	27.17	0.28	29.27	56.71	4976.23	43.92
64	0.91	0.17	30.88	0.34	28.14	59.35	4919.52	43.83
63	1.00	0.19	34.10	0.38	27.16	61.64	4860.17	43.75
62	1.09	0.22	36.97	0.43	26.28	63.68	4798.53	43.67
61	1.16	0.24	39.58	0.48	25.49	65.53	4734.85	43.58
60	1.23	0.27	41.98	0.54	24.75	67.25	4669.32	43.50
59	1.30	0.30	44.19	0.60	24.06	68.85	4602.08	43.42
58	1.36	0.32	46.27	0.65	23.42	70.35	4533.23	43.33
57	1.42	0.35	48.24	0.70	22.82	71.75	4462.88	43.25
56	1.47	0.37	50.09	0.74	22.25	73.08	4391.13	43.17
55	1.53	0.39	51.86	0.79	21.71	74.35	4318.05	43.08
54	1.57	0.42	53.53	0.83	21.19	75.56	4243.70	43.00
53	1.62	0.44	55.13	0.88	20.70	76.71	4168.14	42.92
52	1.67	0.46	56.65	0.93	20.23	77.80	4091.43	42.83
51	1.71	0.48	58.11	0.97	19.78	78.85	4013.63	42.75
50	1.75	0.50	59.50	1.01	19.35	79.86	3934.77	42.67
49	1.79	0.53	60.84	1.05	18.93	80.82	3854.92	42.58
48	1.83	0.55	62.12	1.09	18.54	81.75	3774.09	42.50
47	1.86	0.56	63.36	1.13	18.15	82.64	3692.34	42.42
46	1.90	0.58	64.54	1.17	17.79	83.50	3609.70	42.33
45	1.93	0.60	65.68	1.20	17.43	84.32	3526.21	42.25
44	1.96	0.62	66.78	1.24	17.09	85.11	3441.89	42.17
43	2.00	0.64	67.83	1.28	16.77	85.88	3356.77	42.08
42	2.03	0.66	68.85	1.31	16.45	86.61	3270.90	42.00
41	2.05	0.67	69.83	1.35	16.15	87.32	3184.28	41.92
40	2.08	0.69	70.77	1.38	15.85	88.01	3096.96	41.83
39	2.11	0.71	71.67	1.41	15.57	88.66	3008.96	41.75
38	2.13	0.72	72.55	1.45	15.30	89.30	2920.29	41.67
37	2.16	0.74	73.40	1.48	15.04	89.91	2830.99	41.58
36	2.18	0.76	74.21	1.51	14.78	90.50	2741.08	41.50
35	2.21	0.77	74.99	1.54	14.54	91.07	2650.58	41.42
34	2.23	0.79	75.74	1.57	14.31	91.62	2559.51	41.33
33	2.25	0.80	76.46	1.60	14.08	92.15	2467.89	41.25
32	2.27	0.82	77.16	1.64	13.86	92.66	2375.74	41.17
31	2.29	0.84	77.83	1.68	13.65	93.15	2283.08	41.08
30	2.31	0.85	78.47	1.69	13.45	93.61	2189.93	41.00
29	2.33	0.86	79.08	1.72	13.26	94.06	2096.32	40.92
28	2.34	0.87	79.67	1.74	13.08	94.49	2002.26	40.83
27	2.36	0.89	80.24	1.77	12.90	94.90	1907.77	40.75
26	2.38	0.90	80.78	1.80	12.73	95.30	1812.86	40.67
25	2.39	0.91	81.29	1.82	12.57	95.68	1717.56	40.58
24	2.41	0.92	81.79	1.84	12.41	96.04	1621.88	40.50
23	2.42	0.93	82.25	1.87	12.26	96.39	1525.84	40.42
22	2.43	0.95	82.70	1.89	12.12	96.71	1429.45	40.33
21	2.44	0.96	83.12	1.91	11.99	97.03	1332.74	40.25
20	2.46	0.97	83.53	1.93	11.86	97.32	1235.71	40.17
19	2.47	0.98	83.90	1.96	11.74	97.60	1138.39	40.08

Tank 1

Project:

StormTech
Detention • Retention • Water Quality
A division of ADS

Chamber Model -	MC-4500	
Units -	Imperial	Click Here for Metric
Number of Chambers -	14	
Number of End Caps -	2	
Voids in the stone (porosity) -	30	%
Base of Stone Elevation -	37.00	ft
Amount of Stone Above Chambers -	12	in
Amount of Stone Below Chambers -	12	in
Area of system -	692	sf Min. Area - 576 sf min. area

☑ Include Perimeter Stone in Calculations

Height of System (inches)	Incremental Single Chamber (cubic feet)	Incremental Single End Cap (cubic feet)	Incremental Chambers (cubic feet)	Incremental End Cap (cubic feet)	Incremental Stone (cubic feet)	Incremental Ch, EC and Stone (cubic feet)	Cumulative System (cubic feet)	Elevation (feet)
84	0.00	0.00	0.00	0.00	17.30	17.30	2546.96	44.00
83	0.00	0.00	0.00	0.00	17.30	17.30	2529.66	43.92
82	0.00	0.00	0.00	0.00	17.30	17.30	2512.36	43.83
81	0.00	0.00	0.00	0.00	17.30	17.30	2495.06	43.75
80	0.00	0.00	0.00	0.00	17.30	17.30	2477.76	43.67
79	0.00	0.00	0.00	0.00	17.30	17.30	2460.46	43.58
78	0.00	0.00	0.00	0.00	17.30	17.30	2443.16	43.50
77	0.00	0.00	0.00	0.00	17.30	17.30	2425.86	43.42
76	0.00	0.00	0.00	0.00	17.30	17.30	2408.56	43.33
75	0.00	0.00	0.00	0.00	17.30	17.30	2391.26	43.25
74	0.00	0.00	0.00	0.00	17.30	17.30	2373.96	43.17
73	0.00	0.00	0.00	0.00	17.30	17.30	2356.66	43.08
72	0.04	0.00	0.57	0.00	17.13	17.70	2339.36	43.00
71	0.12	0.01	1.63	0.02	16.81	18.45	2321.66	42.92
70	0.16	0.03	2.31	0.05	16.59	18.95	2303.20	42.83
69	0.21	0.05	2.92	0.10	16.39	19.41	2284.25	42.75
68	0.27	0.07	3.76	0.14	16.13	20.02	2264.84	42.67
67	0.45	0.09	6.34	0.18	15.35	21.86	2244.82	42.58
66	0.67	0.11	9.31	0.23	14.44	23.98	2222.96	42.50
65	0.80	0.14	11.19	0.28	13.86	25.33	2198.98	42.42
64	0.91	0.17	12.71	0.34	13.39	26.43	2173.65	42.33
63	1.00	0.19	14.04	0.38	12.97	27.40	2147.22	42.25
62	1.09	0.22	15.22	0.43	12.60	28.26	2119.82	42.17
61	1.16	0.24	16.29	0.48	12.27	29.04	2091.56	42.08
60	1.23	0.27	17.28	0.54	11.96	29.77	2062.52	42.00
59	1.30	0.30	18.20	0.60	11.66	30.45	2032.75	41.92
58	1.36	0.32	19.05	0.65	11.39	31.09	2002.30	41.83
57	1.42	0.35	19.86	0.70	11.13	31.69	1971.21	41.75
56	1.47	0.37	20.63	0.74	10.89	32.26	1939.51	41.67
55	1.53	0.39	21.35	0.79	10.66	32.80	1907.26	41.58
54	1.57	0.42	22.04	0.83	10.44	33.31	1874.46	41.50
53	1.62	0.44	22.70	0.88	10.23	33.81	1841.14	41.42
52	1.67	0.46	23.33	0.93	10.02	34.28	1807.34	41.33
51	1.71	0.48	23.93	0.97	9.83	34.73	1773.06	41.25
50	1.75	0.50	24.50	1.01	9.65	35.16	1738.33	41.17
49	1.79	0.53	25.05	1.05	9.47	35.57	1703.18	41.08
48	1.83	0.55	25.58	1.09	9.30	35.97	1667.61	41.00
47	1.86	0.56	26.09	1.13	9.13	36.35	1631.64	40.92
46	1.90	0.58	26.58	1.17	8.98	36.72	1595.28	40.83
45	1.93	0.60	27.05	1.20	8.83	37.07	1558.56	40.75
44	1.96	0.62	27.50	1.24	8.68	37.42	1521.49	40.67
43	2.00	0.64	27.93	1.28	8.54	37.75	1484.07	40.58
42	2.03	0.66	28.35	1.31	8.40	38.06	1446.33	40.50
41	2.05	0.67	28.75	1.35	8.27	38.37	1408.27	40.42
40	2.08	0.69	29.14	1.38	8.14	38.67	1369.90	40.33
39	2.11	0.71	29.51	1.41	8.02	38.95	1331.23	40.25
38	2.13	0.72	29.87	1.45	7.90	39.23	1292.28	40.17
37	2.16	0.74	30.22	1.48	7.79	39.49	1253.06	40.08
36	2.18	0.76	30.56	1.51	7.68	39.75	1213.57	40.00
35	2.21	0.77	30.88	1.54	7.57	39.99	1173.82	39.92
34	2.23	0.79	31.19	1.57	7.47	40.23	1133.82	39.83
33	2.25	0.80	31.48	1.60	7.37	40.46	1093.59	39.75
32	2.27	0.82	31.77	1.64	7.28	40.69	1053.13	39.67
31	2.29	0.84	32.05	1.68	7.18	40.91	1012.44	39.58
30	2.31	0.85	32.31	1.69	7.10	41.10	971.53	39.50
29	2.33	0.86	32.56	1.72	7.02	41.30	930.43	39.42
28	2.34	0.87	32.81	1.74	6.93	41.49	889.13	39.33
27	2.36	0.89	33.04	1.77	6.86	41.67	847.65	39.25
26	2.38	0.90	33.26	1.80	6.78	41.84	805.98	39.17
25	2.39	0.91	33.47	1.82	6.71	42.01	764.14	39.08
24	2.41	0.92	33.68	1.84	6.64	42.16	722.14	39.00
23	2.42	0.93	33.87	1.87	6.58	42.32	679.97	38.92
22	2.43	0.95	34.05	1.89	6.52	42.46	637.66	38.83
21	2.44	0.96	34.23	1.91	6.46	42.60	595.19	38.75
20	2.46	0.97	34.39	1.93	6.40	42.73	552.60	38.67
19	2.47	0.98	34.55	1.96	6.35	42.85	509.87	38.58

Summary volume

tank 3		tank 2		tank 1		cumulative	
5734.85	45.50	4149.90		2600.96		12485.71	45.5
5697.35	45.42	4144.90		2597.96		12440.21	
5659.85	45.33	4139.90		2594.96		12394.71	
5622.35	45.25	4134.90		2591.96		12349.21	
5584.85	45.17	4129.90		2588.96		12303.71	
5547.35	45.08	4124.90		2585.96		12258.21	
5509.85	45.00	4119.90	45.00	2582.96		12212.71	45
5472.35	44.92	4092.75	44.92	2579.96		12145.06	
5434.85	44.83	4065.60	44.83	2576.96		12077.41	
5397.35	44.75	4038.45	44.75	2573.96		12009.76	
5359.85	44.67	4011.30	44.67	2570.96		11942.11	
5322.35	44.58	3984.15	44.58	2567.96		11874.46	
5284.85	44.50	3957.00	44.50	2564.96		11806.81	44.5
5246.37	44.42	3929.85	44.42	2561.96		11738.18	
5206.10	44.33	3902.70	44.33	2558.96		11667.76	
5164.64	44.25	3875.55	44.25	2555.96		11596.15	
5122.11	44.17	3848.40	44.17	2552.96		11523.46	
5078.12	44.08	3821.25	44.08	2549.96		11449.33	
5029.72	44.00	3794.10	44.00	2546.96	44.00	11370.78	44
4976.23	43.92	3766.26	43.92	2529.66	43.92	11272.15	
4919.52	43.83	3737.15	43.83	2512.36	43.83	11169.03	
4860.17	43.75	3707.20	43.75	2495.06	43.75	11062.42	
4798.53	43.67	3676.47	43.67	2477.76	43.67	10952.76	
4734.85	43.58	3644.72	43.58	2460.46	43.58	10840.03	
4669.32	43.50	3609.84	43.50	2443.16	43.50	10722.32	43.5
4602.08	43.42	3571.36	43.42	2425.86	43.42	10599.29	
4533.23	43.33	3530.58	43.33	2408.56	43.33	10472.37	
4462.88	43.25	3487.94	43.25	2391.26	43.25	10342.08	
4391.13	43.17	3443.68	43.17	2373.96	43.17	10208.76	
4318.05	43.08	3397.96	43.08	2356.66	43.08	10072.66	
4243.70	43.00	3350.92	43.00	2339.36	43.00	9933.97	43
4168.14	42.92	3302.66	42.92	2321.66	42.92	9792.46	
4091.43	42.83	3253.26	42.83	2303.20	42.83	9647.90	
4013.63	42.75	3202.79	42.75	2284.25	42.75	9500.67	
3934.77	42.67	3151.32	42.67	2264.84	42.67	9350.94	
3854.92	42.58	3098.90	42.58	2244.82	42.58	9198.63	
3774.09	42.50	3045.58	42.50	2222.96	42.50	9042.63	42.5
3692.34	42.42	2991.39	42.42	2198.98	42.42	8882.71	
3609.70	42.33	2936.39	42.33	2173.65	42.33	8719.74	
3526.21	42.25	2880.60	42.25	2147.22	42.25	8554.02	
3441.89	42.17	2824.05	42.17	2119.82	42.17	8385.76	
3356.77	42.08	2766.80	42.08	2091.56	42.08	8215.13	
3270.90	42.00	2708.85	42.00	2062.52	42.00	8042.27	42
3184.28	41.92	2650.24	41.92	2032.75	41.92	7867.27	
3096.96	41.83	2590.99	41.83	2002.30	41.83	7690.25	
3008.96	41.75	2531.14	41.75	1971.21	41.75	7511.30	
2920.29	41.67	2470.69	41.67	1939.51	41.67	7330.50	
2830.99	41.58	2409.67	41.58	1907.26	41.58	7147.93	
2741.08	41.50	2348.11	41.50	1874.46	41.50	6963.65	41.5
2650.58	41.42	2286.03	41.42	1841.14	41.42	6777.75	
2559.51	41.33	2223.43	41.33	1807.34	41.33	6590.27	
2467.89	41.25	2160.34	41.25	1773.06	41.25	6401.29	
2375.74	41.17	2096.79	41.17	1738.33	41.17	6210.86	
2283.08	41.08	2032.78	41.08	1703.18	41.08	6019.03	
2189.93	41.00	1968.32	41.00	1667.61	41.00	5825.86	41
2096.32	40.92	1903.45	40.92	1631.64	40.92	5631.40	
2002.26	40.83	1838.17	40.83	1595.28	40.83	5435.71	
1907.77	40.75	1772.49	40.75	1558.56	40.75	5238.82	

1812.86	40.67	1706.44	40.67	1521.49	40.67	5040.79	
1717.56	40.58	1640.01	40.58	1484.07	40.58	4841.65	
1621.88	40.50	1573.23	40.50	1446.33	40.50	4641.44	40.5
1525.84	40.42	1506.12	40.42	1408.27	40.42	4440.23	
1429.45	40.33	1438.70	40.33	1369.90	40.33	4238.04	
1332.74	40.25	1370.96	40.25	1331.23	40.25	4034.93	
1235.71	40.17	1302.92	40.17	1292.28	40.17	3830.91	
1138.39	40.08	1234.60	40.08	1253.06	40.08	3626.05	
1040.79	40.00	1166.01	40.00	1213.57	40.00	3420.36	40
942.92	39.92	1097.15	39.92	1173.82	39.92	3213.89	
844.80	39.83	1028.05	39.83	1133.82	39.83	3006.68	
746.45	39.75	958.72	39.75	1093.59	39.75	2798.76	
647.87	39.67	889.15	39.67	1053.13	39.67	2590.15	
549.09	39.58	819.38	39.58	1012.44	39.58	2380.90	
450.00	39.50	749.40	39.50	971.53	39.50	2170.93	39.5
412.50	39.42	679.23	39.42	930.43	39.42	2022.16	
375.00	39.33	608.88	39.33	889.13	39.33	1873.02	
337.50	39.25	538.36	39.25	847.65	39.25	1723.51	
300.00	39.17	467.68	39.17	805.98	39.17	1573.66	
262.50	39.08	396.85	39.08	764.14	39.08	1423.49	
225.00	39.00	325.80	39.00	722.14	39.00	1272.94	39
187.50	38.92	298.65	38.92	679.97	38.92	1166.12	
150.00	38.83	271.50	38.83	637.66	38.83	1059.16	
112.50	38.75	244.35	38.75	595.19	38.75	952.04	
75.00	38.67	217.20	38.67	552.60	38.67	844.80	
37.50	38.58	190.05	38.58	509.87	38.58	737.42	
		162.90	38.50	467.01	38.50	629.91	38.5
		135.75	38.42	424.04	38.42	559.79	
		108.60	38.33	380.96	38.33	489.56	
		81.45	38.25	337.77	38.25	419.22	
		54.30	38.17	294.49	38.17	348.79	
		27.15	38.08	251.11	38.08	278.26	
				207.60	38.00	207.60	38
				190.30	37.92	190.30	
				173.00	37.83	173.00	
				155.70	37.75	155.70	
				138.40	37.67	138.40	
				121.10	37.58	121.10	
				103.80	37.50	103.80	37.5
				86.50	37.42	86.50	
				69.20	37.33	69.20	
				51.90	37.25	51.90	
				34.60	37.17	34.60	
				17.30	37.08	17.30	

VOLUME CALCULATIONS

for Pond Routing

ACTUAL ELEV.	DEPTH (FT)	VOLUME (AC-FT)	Q (CFS)
39	0	0.030	0.01
40	0.75	0.080	1.30
40.5	1.25	0.108	1.99
41	1.75	0.135	2.49
41.5	2.25	0.161	2.91
42	2.75	0.186	3.28
42.5	3.25	0.209	3.61
43	3.75	0.230	3.91
43.5	4.25	0.248	4.19
44	4.75	0.262	4.45
44.5	5.25	0.273	4.70
45	5.75	0.282	4.93
45.5	6.25	0.288	5.16
46	6.75	0.296	5.37

<u>Orifice Equation</u>

Q = CA SQRT(2gH)

C = 0.6

Diameter (in) 9

Area (ft^2)= 0.44178647

g = 32.2

H (Ft) = Depth of water above center of orifice

Q (CFS)= Flow

APPENDIX D

ADS INFILTRATOR SPECIFICATIONS

PROJECT INFORMATION	
ENGINEERED PRODUCT MANAGER	PEGGY GRAHAM 720-882-6060 PEGGY.GRAHAM@ADS-PIPE.COM
ADS SALES REP	PETER NICHOLS 505-361-5884 PETER.NICHOLS@ADS-PIPE.COM
PROJECT NO	84781

ADS

ADVANCED DRAINAGE SYSTEMS, INC.

SAFCU

ALBUQUERQUE, NM

STORMWATER CHAMBER SPECIFICATIONS

1. CHAMBERS SHALL BE STORMTECH MC-4500 OR APPROVED EQUAL
2. CHAMBERS SHALL BE MANUFACTURED FROM VIRGIN IMPACT-MODIFIED POLYPROPYLENE COPOLYMERS
3. CHAMBER ROWS SHALL PROVIDE CONTINUOUS, UNOBSTRUCTED INTERNAL SPACE WITH NO INTERNAL SUPPORT PANELS THAT WOULD IMPEDE FLOW OR LIMIT ACCESS FOR INSPECTION
4. THE STRUCTURAL DESIGN OF THE CHAMBERS, THE STRUCTURAL BACKFILL, AND THE INSTALLATION REQUIREMENTS SHALL ENSURE THAT THE LOAD FACTORS SPECIFIED IN THE AASHTO LRFD BRIDGE DESIGN SPECIFICATIONS, SECTION 12.12, ARE MET FOR: 1) LONG-DURATION DEAD LOADS AND 2) SHORT-DURATION LIVE LOADS, BASED ON THE AASHTO DESIGN TRUCK WITH CONSIDERATION FOR IMPACT AND MULTIPLE VEHICLE PRESENCES
5. CHAMBERS SHALL MEET THE REQUIREMENTS OF ASTM F2418, "STANDARD SPECIFICATION FOR POLYPROPYLENE (PP) CORRUGATED WALL STORMWATER COLLECTION CHAMBERS"
6. CHAMBERS SHALL BE DESIGNED AND ALLOWABLE LOADS DETERMINED IN ACCORDANCE WITH ASTM F2787, "STANDARD PRACTICE FOR STRUCTURAL DESIGN OF THERMOPLASTIC CORRUGATED WALL STORMWATER COLLECTION CHAMBERS"
7. ONLY CHAMBERS THAT ARE APPROVED BY THE SITE DESIGN ENGINEER WILL BE ALLOWED. THE CHAMBER MANUFACTURER SHALL SUBMIT THE FOLLOWING UPON REQUEST TO THE SITE DESIGN ENGINEER FOR APPROVAL BEFORE DELIVERING CHAMBERS TO THE PROJECT SITE:
   - a. A STRUCTURAL EVALUATION SEALED BY A REGISTERED PROFESSIONAL ENGINEER THAT DEMONSTRATES THAT THE SAFETY FACTORS ARE GREATER THAN OR EQUAL TO 1.95 FOR DEAD LOAD AND 1.75 FOR LIVE LOAD, THE MINIMUM REQUIRED BY ASTM F2787 AND BY AASHTO FOR THERMOPLASTIC PIPE
   - b. A STRUCTURAL EVALUATION SEALED BY A REGISTERED PROFESSIONAL ENGINEER THAT DEMONSTRATES THAT THE LOAD FACTORS SPECIFIED IN THE AASHTO LRFD BRIDGE DESIGN SPECIFICATIONS, SECTION 12.12, ARE MET. THE 50 YEAR CREEP MODULUS DATA SPECIFIED IN ASTM F2418 MUST BE USED AS PART OF THE AASHTO STRUCTURAL EVALUATION TO VERIFY LONG-TERM PERFORMANCE
   - c. STRUCTURAL CROSS SECTION DETAIL ON WHICH THE STRUCTURAL EVALUATION IS BASED
8. CHAMBERS AND END CAPS SHALL BE PRODUCED AT AN ISO 9001 CERTIFIED MANUFACTURING FACILITY

IMPORTANT - NOTES FOR THE BIDDING AND INSTALLATION OF MC-4500 CHAMBER SYSTEM

1. STORMTECH MC-4500 CHAMBERS SHALL NOT BE INSTALLED UNTIL THE MANUFACTURER'S REPRESENTATIVE HAS COMPLETED A PRE-CONSTRUCTION MEETING WITH THE INSTALLERS
2. STORMTECH MC-4500 CHAMBERS SHALL BE INSTALLED IN ACCORDANCE WITH THE "STORMTECH MC-3500/MC-4500 CONSTRUCTION GUIDE"
3. CHAMBERS ARE NOT TO BE BACKFILLED WITH A DOZER OR EXCAVATOR SITUATED OVER THE CHAMBERS. STORMTECH RECOMMENDS 3 BACKFILL METHODS:
   - STONESHOOTER LOCATED OFF THE CHAMBER BED
   - BACKFILL AS ROWS ARE BUILT USING AN EXCAVATOR ON THE FOUNDATION STONE OR SUBGRADE
   - BACKFILL FROM OUTSIDE THE EXCAVATION USING A LONG BOOM HOE OR EXCAVATOR.
4. THE FOUNDATION STONE SHALL BE LEVELED AND COMPACTED PRIOR TO PLACING CHAMBERS
5. JOINTS BETWEEN CHAMBERS SHALL BE PROPERLY SEATED PRIOR TO PLACING STONE
6. MAINTAIN MINIMUM 9" (230 mm) SPACING BETWEEN THE CHAMBER ROWS.
7. INLET AND OUTLET MANIFOLDS MUST BE INSERTED A MINIMUM OF 12" (300 mm) INTO CHAMBER END CAPS
8. EMBEDMENT STONE SURROUNDING CHAMBERS MUST BE A CLEAN, CRUSHED, ANGULAR STONE 3/4" 2" (20-50 mm) MEETING THE AASHTO M43 DESIGNATION OF 43 OR 64
9. STONE SHALL BE BROUGHT UP EVENLY AROUND CHAMBERS SO AS NOT TO DISTORT THE CHAMBER SHAPE. STONE DEPTHS SHOULD NEVER DIFFER BY MORE THAN 12" (300 mm) BETWEEN ADJACENT CHAMBER ROWS
10. STONE MUST BE PLACED ON THE TOP CENTER OF THE CHAMBER TO ANCHOR THE CHAMBERS IN PLACE AND PRESERVE ROW SPACING
11. ADS RECOMMENDS THE USE OF "FLEXSTORM CATCH IT" INSERTS DURING CONSTRUCTION FOR ALL INLETS TO PROTECT THE SUBSURFACE STORMWATER MANAGEMENT SYSTEM FROM CONSTRUCTION SITE RUNOFF

NOTES FOR CONSTRUCTION EQUIPMENT

1. STORMTECH MC-4500 CHAMBERS SHALL BE INSTALLED IN ACCORDANCE WITH THE "STORMTECH MC-3500/MC-4500 CONSTRUCTION GUIDE"
2. THE USE OF EQUIPMENT OVER MC-4500 CHAMBERS IS LIMITED:
   - NO EQUIPMENT IS ALLOWED ON BARE CHAMBERS
   - NO RUBBER TIRED LOADER, DUMP TRUCK, OR EXCAVATORS ARE ALLOWED UNTIL PROPER FILL DEPTHS ARE REACHED IN ACCORDANCE WITH THE "STORMTECH MC-3500/MC-4500 CONSTRUCTION GUIDE"
   - WEIGHT LIMITS FOR CONSTRUCTION EQUIPMENT CAN BE FOUND IN THE "STORMTECH MC-3500/MC-4500 CONSTRUCTION GUIDE"
3. FULL 36" (900 mm) OF STABILIZED COVER MATERIALS OVER THE CHAMBERS IS REQUIRED FOR DUMP TRUCK TRAVEL OR DUMPING

USE OF A DOZER TO PUSH EMBEDMENT STONE BETWEEN THE ROWS OF CHAMBERS MAY CAUSE DAMAGE TO CHAMBERS AND IS NOT AN ACCEPTABLE BACKFILL METHOD. ANY CHAMBERS DAMAGED BY USING THE "DUMP AND PUSH" METHOD ARE NOT COVERED UNDER THE STORMTECH STANDARD WARRANTY.

CONTACT STORMTECH AT 1-888-892-2694 WITH ANY QUESTIONS ON INSTALLATION REQUIREMENTS OR WEIGHT LIMITS FOR CONSTRUCTION EQUIPMENT.

ACCEPTABLE FILL MATERIALS: STORMTECH MC-4500 CHAMBER SYSTEMS

MATERIAL LOCATION		DESCRIPTION	AASHTO MATERIAL CLASSIFICATIONS	COMPACTION / DENSITY REQUIREMENT
D	FINAL FILL: FILL MATERIAL FOR LAYER 'D' STARTS FROM THE TOP OF THE 'C' LAYER TO THE BOTTOM OF FLEXIBLE PAVEMENT OR UNPAVED FINISHED GRADE ABOVE. NOTE THAT PAVEMENT SUBBASE MAY BE PART OF THE 'D' LAYER	ANY SOIL/ROCK MATERIALS, NATIVE SOILS OR PER ENGINEER'S PLANS. CHECK PLANS FOR PAVEMENT SUBGRADE REQUIREMENTS	N/A	PREPARE PER SITE DESIGN ENGINEER'S PLANS. PAVED INSTALLATIONS MAY HAVE STRINGENT MATERIAL AND PREPARATION REQUIREMENTS
C	INITIAL FILL: FILL MATERIAL FOR LAYER 'C' STARTS FROM THE TOP OF THE EMBEDMENT STONE ('B' LAYER) TO 24" (600 mm) ABOVE THE TOP OF THE CHAMBER. NOTE THAT PAVEMENT SUBBASE MAY BE A PART OF THE 'C' LAYER	GRANULAR WELL-GRADED SOIL/AGGREGATE MIXTURES, <35% FINES OR PROCESSED AGGREGATE MOST PAVEMENT SUBBASE MATERIALS CAN BE USED IN LIEU OF THIS LAYER.	AASHTO M145[1] A-1, A-2-4, A-3 OR AASHTO M43[1] 2, 357, 4, 467, 5, 56, 57, 6, 67, 68, 7, 78, 8, 89, 9, 10	BEGIN COMPACTIONS AFTER 24" (600 mm) OF MATERIAL OVER THE CHAMBERS IS REACHED. COMPACT ADDITIONAL LAYERS IN 12" (300 mm) MAX LIFTS TO A MIN. 95% PROCTOR DENSITY FOR WELL GRADED MATERIAL AND 91% RELATIVE DENSITY FOR PROCESSED AGGREGATE MATERIALS
B	EMBEDMENT STONE: FILL SURROUNDING THE CHAMBERS FROM THE FOUNDATION STONE ('A' LAYER) TO THE 'C' LAYER ABOVE	CLEAN, CRUSHED, ANGULAR STONE, NOMINAL SIZE DISTRIBUTION BETWEEN 3/4-2 INCH (20-50 mm)	AASHTO M43[1] 3, 4	NO COMPACTION REQUIRED
A	FOUNDATION STONE: FILL BELOW CHAMBERS FROM THE SUBGRADE UP TO THE FOOT (BOTTOM) OF THE CHAMBER	CLEAN, CRUSHED, ANGULAR STONE, NOMINAL SIZE DISTRIBUTION BETWEEN 3/4-2 INCH (20-50 mm)	AASHTO M43[1] 3, 4	PLATE COMPACT OR ROLL TO ACHIEVE A FLAT SURFACE [2,3]

PLEASE NOTE

1. THE LISTED AASHTO DESIGNATIONS ARE FOR GRADATIONS ONLY. THE STONE MUST ALSO BE CLEAN, CRUSHED, ANGULAR. FOR EXAMPLE, A SPECIFICATION FOR #4 STONE WOULD STATE "CLEAN, CRUSHED, ANGULAR NO. 4 (AASHTO M43) STONE"
2. STORMTECH COMPACTION REQUIREMENTS ARE MET FOR 'A' LOCATION MATERIALS WHEN PLACED AND COMPACTED IN 9" (230 mm) (MAX) LIFTS USING TWO FULL COVERAGES WITH A VIBRATORY COMPACTOR.
3. WHERE INFILTRATION SURFACES MAY BE COMPROMISED BY COMPACTION, FOR STANDARD DESIGN LOAD CONDITIONS, A FLAT SURFACE MAY BE ACHIEVED BY RAKING OR DRAGGING WITHOUT COMPACTION EQUIPMENT. FOR SPECIAL LOAD DESIGNS, CONTACT STORMTECH FOR COMPACTION REQUIREMENTS.

WHEN MULTIPLE CHAMBERS

WHEN SINGLE CHAMBER

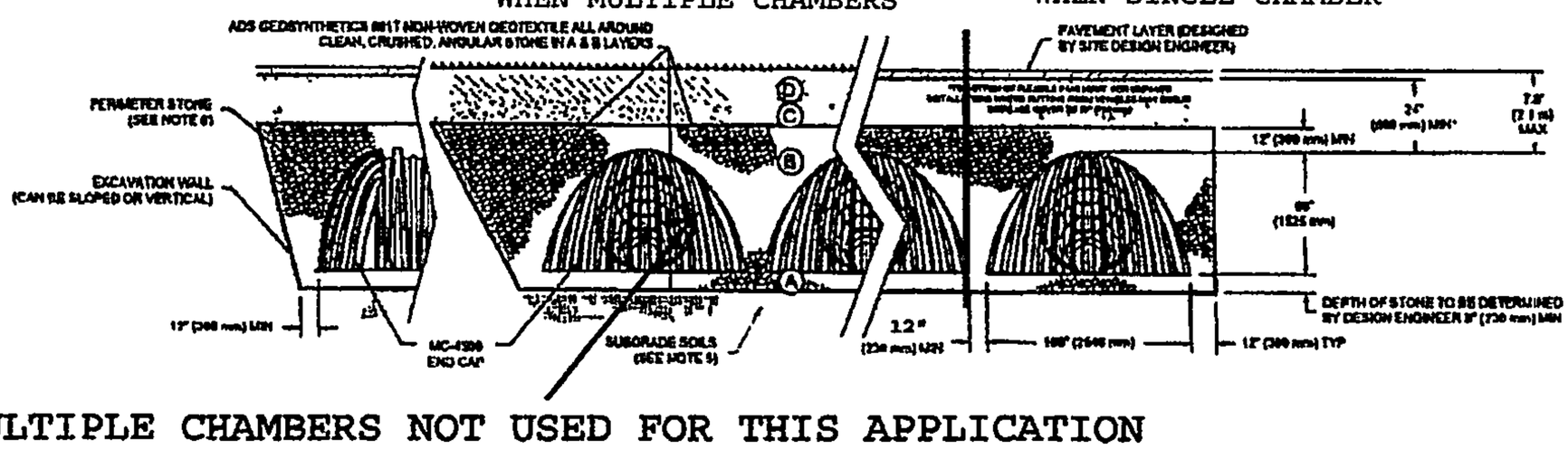

MULTIPLE CHAMBERS NOT USED FOR THIS APPLICATION

NOTES:

1. MC-4500 CHAMBERS SHALL CONFORM TO THE REQUIREMENTS OF ASTM F2418 "STANDARD SPECIFICATION FOR POLYPROPYLENE (PP) CORRUGATED WALL STORMWATER COLLECTION CHAMBERS"
2. MC-4500 CHAMBERS SHALL BE DESIGNED IN ACCORDANCE WITH ASTM F2787 "STANDARD PRACTICE FOR STRUCTURAL DESIGN OF THERMOPLASTIC CORRUGATED WALL STORMWATER COLLECTION CHAMBERS"
3. "ACCEPTABLE FILL MATERIALS" TABLE ABOVE PROVIDES MATERIAL LOCATIONS, DESCRIPTIONS, GRADATIONS, AND COMPACTION REQUIREMENTS FOR FOUNDATION, EMBEDMENT, AND FILL MATERIALS
4. THE "SITE DESIGN ENGINEER" REFERS TO THE ENGINEER RESPONSIBLE FOR THE DESIGN AND LAYOUT OF THE STORMTECH CHAMBERS FOR THIS PROJECT.
5. THE SITE DESIGN ENGINEER IS RESPONSIBLE FOR ASSESSING THE BEARING RESISTANCE (ALLOWABLE BEARING CAPACITY) OF THE SUBGRADE SOILS AND THE DEPTH OF FOUNDATION STONE WITH CONSIDERATION FOR THE RANGE OF EXPECTED SOIL MOISTURE CONDITIONS.
6. PERIMETER STONE MUST BE EXTENDED HORIZONTALLY TO THE EXCAVATION WALL FOR BOTH VERTICAL AND SLOPED EXCAVATION WALLS.
7. ONCE LAYER 'C' IS PLACED, ANY SOIL/MATERIAL CAN BE PLACED IN LAYER 'D' UP TO THE FINISHED GRADE. MOST PAVEMENT SUBBASE SOILS CAN BE USED TO REPLACE THE MATERIAL REQUIREMENTS OF LAYER 'C' OR 'D' AT THE SITE DESIGN ENGINEER'S DISCRETION.

SAFCA & STARBUCKS
ALBUQUERQUE, NM

DATE: 3/31/16 DRAWN: WCM
PROJECT #: 5081 CHECKED: KAP

REV	DRWN	CHK	DESCRIPTION

StormTech

ADS
4640 TRUEMAN BLVD
HILLIARD, OH 43026
1-866-723-7472

SHEET 3 OF 6

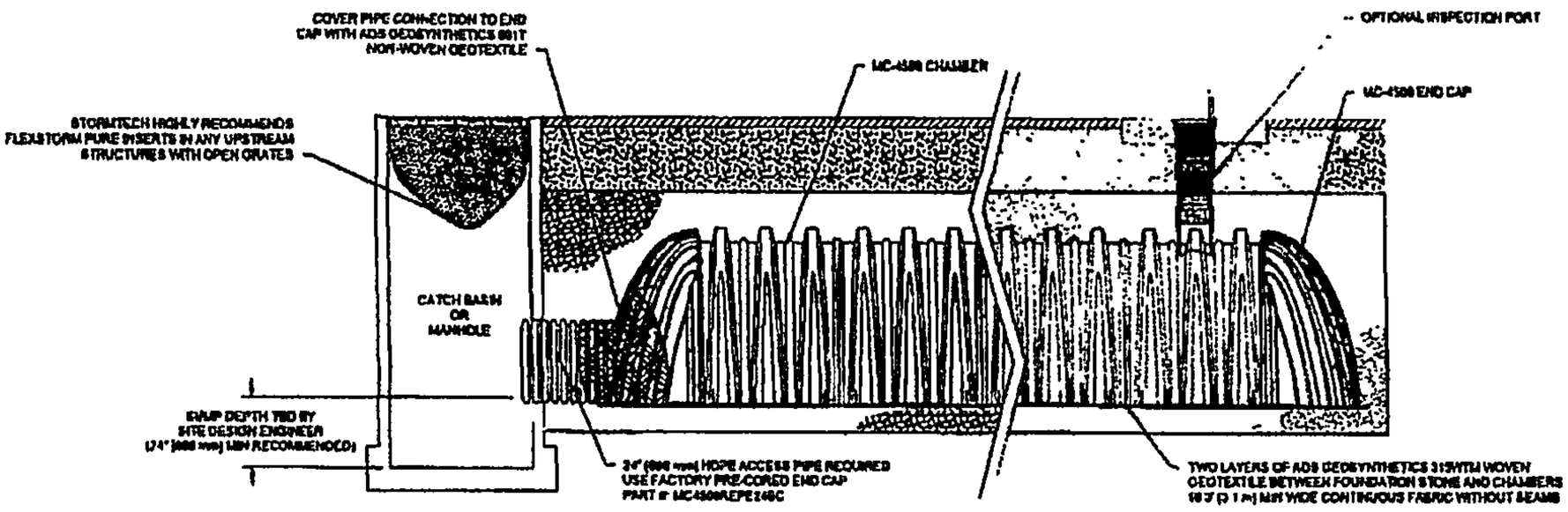

MC-4500 ISOLATOR ROW DETAIL
NTS

INSPECTION & MAINTENANCE

STEP 1) INSPECT ISOLATOR ROW FOR SEDIMENT
- A. INSPECTION PORTS (IF PRESENT)
  - A.1 REMOVE/OPEN LID ON NYLOPLAST INLINE DRAIN
  - A.2 REMOVE AND CLEAN FLEXSTORM FILTER IF INSTALLED
  - A.3 USING A FLASHLIGHT AND STADIA ROD, MEASURE DEPTH OF SEDIMENT AND RECORD ON MAINTENANCE LOG
  - A.4 LOWER A CAMERA INTO ISOLATOR ROW FOR VISUAL INSPECTION OF SEDIMENT LEVELS (OPTIONAL)
  - A.5 IF SEDIMENT IS AT, OR ABOVE, 3" (80 mm) PROCEED TO STEP 2. IF NOT, PROCEED TO STEP 3
- B. ALL ISOLATOR ROWS
  - B.1 REMOVE COVER FROM STRUCTURE AT UPSTREAM END OF ISOLATOR ROW
  - B.2 USING A FLASHLIGHT, INSPECT DOWN THE ISOLATOR ROW THROUGH OUTLET PIPE
    - i) MIRRORS ON POLES OR CAMERAS MAY BE USED TO AVOID A CONFINED SPACE ENTRY
    - ii) FOLLOW OSHA REGULATIONS FOR CONFINED SPACE ENTRY IF ENTERING MANHOLE
  - B.3 IF SEDIMENT IS AT, OR ABOVE, 3" (80 mm) PROCEED TO STEP 2. IF NOT, PROCEED TO STEP 3

STEP 2) CLEAN OUT ISOLATOR ROW USING THE JETVAC PROCESS
- A. A FIXED CULVERT CLEANING NOZZLE WITH REAR FACING SPREAD OF 45" (1.1 m) OR MORE IS PREFERRED
- B. APPLY MULTIPLE PASSES OF JETVAC UNTIL BACKFLUSH WATER IS CLEAN
- C. VACUUM STRUCTURE SUMP AS REQUIRED

STEP 3) REPLACE ALL COVERS, GRATES, FILTERS, AND LIDS, RECORD OBSERVATIONS AND ACTIONS.

STEP 4) INSPECT AND CLEAN BASINS AND MANHOLES UPSTREAM OF THE STORMTECH SYSTEM

NOTES

1. INSPECT EVERY 6 MONTHS DURING THE FIRST YEAR OF OPERATION. ADJUST THE INSPECTION INTERVAL BASED ON PREVIOUS OBSERVATIONS OF SEDIMENT ACCUMULATION AND HIGH WATER ELEVATIONS
2. CONDUCT JETTING AND VACTORING ANNUALLY OR WHEN INSPECTION SHOWS THAT MAINTENANCE IS NECESSARY

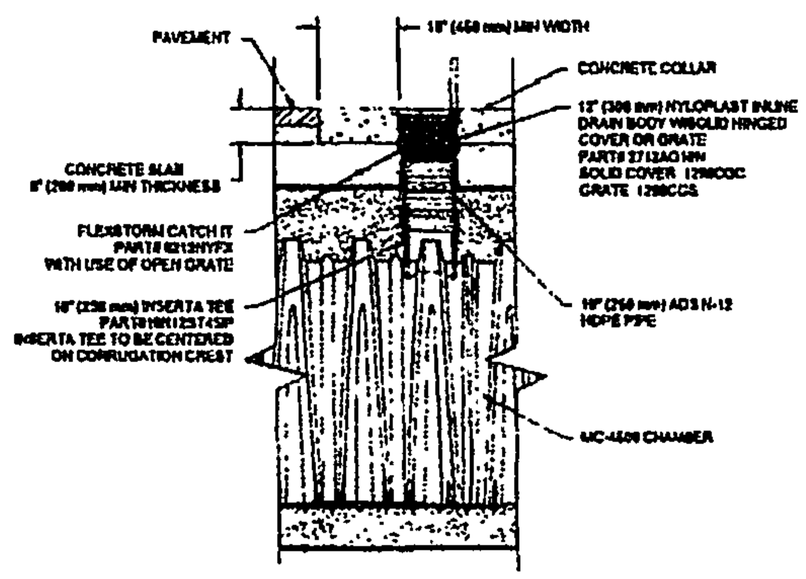

MC-4500 INSPECTION PORT DETAIL
NTS

SAFCA & STARBUCKS
ALBUQUERQUE, NM

DATE: 3/1/15 | DRAWN: WCH
PROJECT #: 8089 | CHECKED: KAP

REV	DRWN	CHK	DESCRIPTION

StormTech

ADS
4640 TRUEMAN BLVD
HILLIARD, OH 43026
1-866-723-7473

SHEET
4 OF 6

MC-4500 TECHNICAL SPECIFICATION

NTS

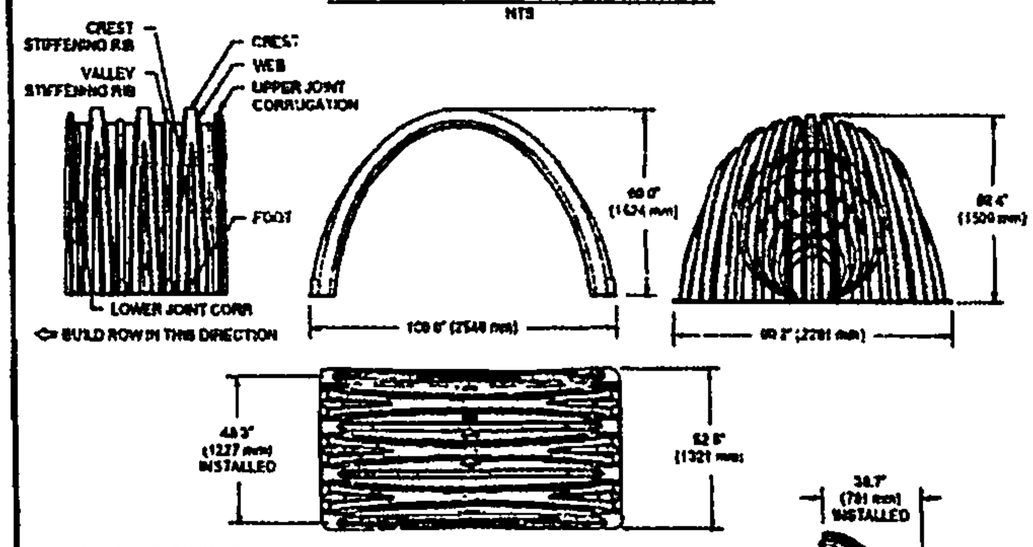

NOMINAL CHAMBER SPECIFICATIONS

SIZE (W X H X INSTALLED LENGTH)	100.0" X 60.0" X 48.3"	(2540 mm X 1524 mm X 1227 mm)
CHAMBER STORAGE	106.5 CUBIC FEET	(3.01 m³)
MINIMUM INSTALLED STORAGE*	162.6 CUBIC FEET	(4.60 m³)
WEIGHT	130.0 lbs	(58.0 kg)

NOMINAL END CAP SPECIFICATIONS

SIZE (W X H X INSTALLED LENGTH)	90.2" X 50.4" X 30.7"	(2291 mm X 1500 mm X 781 mm)
END CAP STORAGE	35.7 CUBIC FEET	(1.01 m³)
MINIMUM INSTALLED STORAGE*	106.7 CUBIC FEET	(3.00 m³)
WEIGHT	125.0 lbs	(61.2 kg)

*ASSUMES 12" (305 mm) STONE ABOVE, 9" (229 mm) STONE FOUNDATION AND BETWEEN CHAMBERS
12" (305 mm) STONE PERIMETER IN FRONT OF END CAPS AND 40% STONE POROSITY

STUBS AT BOTTOM OF END CAP FOR PART NUMBERS ENDING WITH "B"
STUBS AT TOP OF END CAP FOR PART NUMBERS ENDING WITH "T"

PART #	STUB	B	C
MC4500REPE06T	6" (150 mm)	43.54" (1,081 m)	—
MC4500REPE06B		—	0.86" (22 mm)
MC4500REPE08T	8" (200 mm)	43.68" (1,020 m)	—
MC4500REPE08B		—	1.01" (26 mm)
MC4500REPE10T	10" (250 mm)	34.37" (873 mm)	—
MC4500REPE10B		—	1.33" (34 mm)
MC4500REPE12T	12" (300 mm)	33.08" (887 mm)	—
MC4500REPE12B		—	1.65" (39 mm)
MC4500REPE15T	15" (375 mm)	32.72" (831 mm)	—
MC4500REPE15B		—	1.72" (43 mm)
MC4500REPE18TC	18" (450 mm)	29.38" (746 mm)	—
MC4500REPE18BC		—	1.87" (53 mm)
MC4500REPE24TC	24" (600 mm)	23.95" (546 mm)	—
MC4500REPE24BC		—	3.25" (97 mm)
MC4500REPE30BC	30" (750 mm)	—	3.00" (76 mm)
MC4500REPE36BC	36" (900 mm)	—	3.25" (83 mm)
MC4500REPE42BC	42" (1050 mm)	—	3.55" (90 mm)

NOTE: ALL DIMENSIONS ARE NOMINAL

CUSTOM PRECORED INVERTS ARE AVAILABLE UPON REQUEST. INVENTORIED MANIFOLDS INCLUDE 12-24" (300-600 mm) SIZE ON SIZE AND 15-48" (375-1200 mm) ECCENTRIC MANIFOLDS
CUSTOM INVERT LOCATIONS ON THE MC-4500 END CAP CUT IN THE FIELD ARE NOT RECOMMENDED FOR PIPE SIZES GREATER THAN 10" (250 mm)
THE INVERT LOCATION IN COLUMN 'B' ARE THE HIGHEST POSSIBLE FOR THE PIPE SIZE

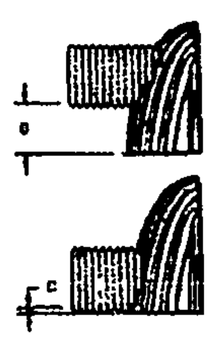

MC-SERIES END CAP INSERTION DETAIL

NTS

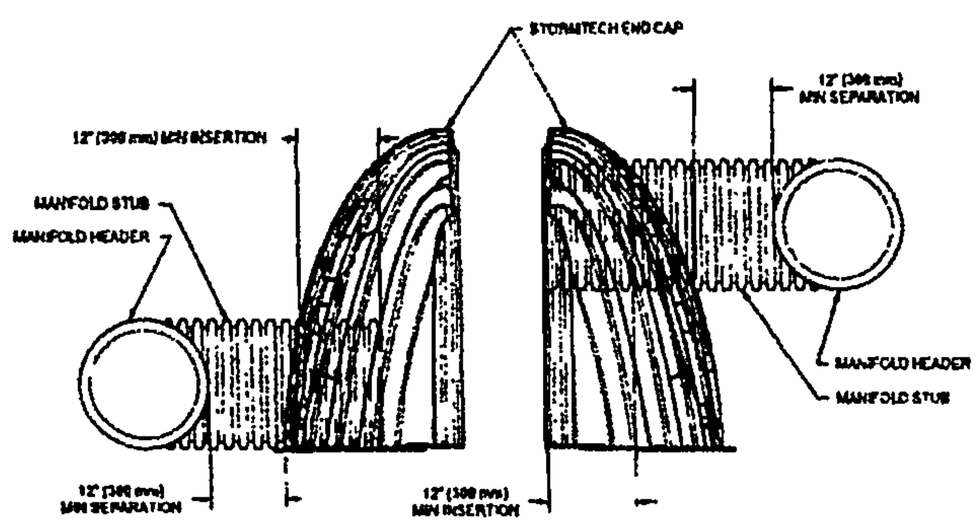

NOTE: MANIFOLD STUB MUST BE LAID HORIZONTAL FOR A PROPER FIT IN END CAP OPENING

SAFCA & STARBUCKS
ALBUQUERQUE, NM

DATE | DRAWN | CHECKED | PROJECT #

REV	DRWN	CHK	DESCRIPTION

StormTech

SHEET 5 OF

NYLOPLAST DRAIN BASIN

NTS

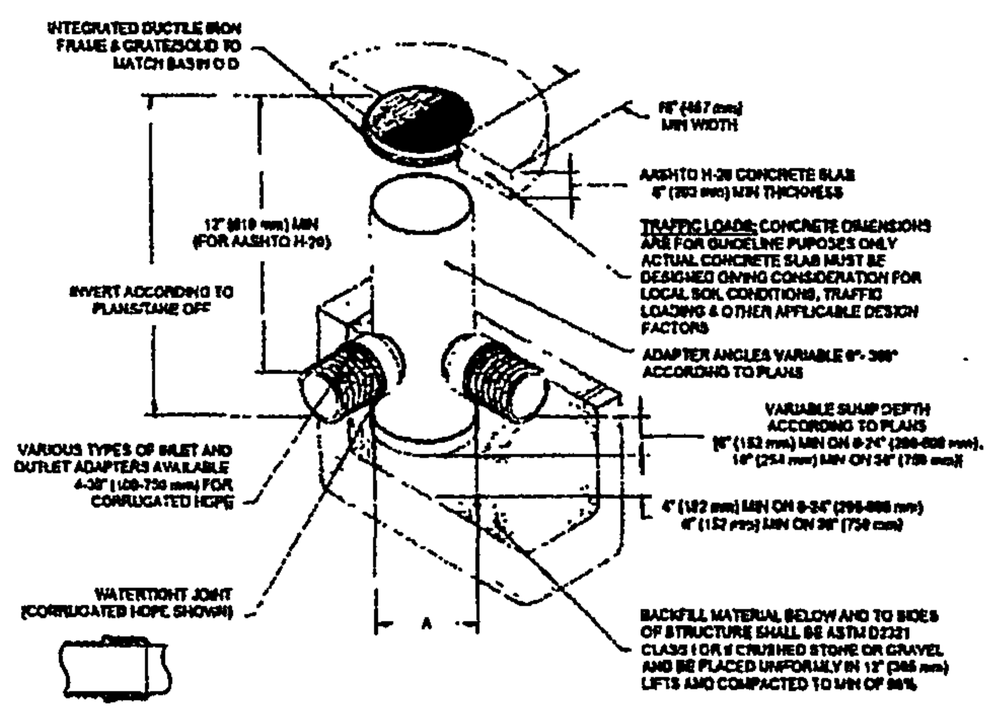

NOTES

1. 8-36" (200-750 mm) GRATES/SOLID COVERS SHALL BE DUCTILE IRON PER ASTM A536 GRADE 70-50-05
2. 12-36" (300-750 mm) FRAMES SHALL BE DUCTILE IRON PER ASTM A536 GRADE 70-50-05
3. DRAIN BASIN TO BE CUSTOM MANUFACTURED ACCORDING TO PLAN DETAILS
4. DRAINAGE CONNECTION & STUB JOINT TIGHTNESS SHALL CONFORM TO ASTM D3212 FOR CORRUGATED HDPE (ADS & HANCOR DUAL WALL) & SDR 35 PVC
5. FOR COMPLETE DESIGN AND PRODUCT INFORMATION: WWW.NYLOPLAST-US.COM
6. TO ORDER CALL: 800-821-6710

A	PART #	GRATE/SOLID COVER OPTIONS		
8" (200 mm)	2808AG	PEDESTRIAN LIGHT DUTY	STANDARD LIGHT DUTY	SOLID LIGHT DUTY
10" (250 mm)	2810AG	PEDESTRIAN LIGHT DUTY	STANDARD LIGHT DUTY	SOLID LIGHT DUTY
12" (300 mm)	2812AG	PEDESTRIAN AASHTO H-10	STANDARD AASHTO H-20	SOLID AASHTO H-20
15" (375 mm)	2815AG	PEDESTRIAN AASHTO H-10	STANDARD AASHTO H-20	SOLID AASHTO H-20
18" (450 mm)	2818AG	PEDESTRIAN AASHTO H-10	STANDARD AASHTO H-20	SOLID AASHTO H-20
24" (600 mm)	2824AG	PEDESTRIAN AASHTO H-10	STANDARD AASHTO H-20	SOLID AASHTO H-20
30" (750 mm)	2830AG	PEDESTRIAN AASHTO H-20	STANDARD AASHTO H-20	SOLID AASHTO H-20

SAFCA & STARBUCKS
ALBUQUERQUE, NM

DATE 3/09/05 | DRAWN WCM | PROJECT #: 84305 | CHECKED MAP

REV | DRAWN | CHK | DESCRIPTION

Nyloplast

ADS
4640 TRUEMAN BLVD
HILLIARD, OH 43026
1-800-733-7473

SHEET
6 OF 6

F22/102
TWO PLANS
NO DOCUMENTS

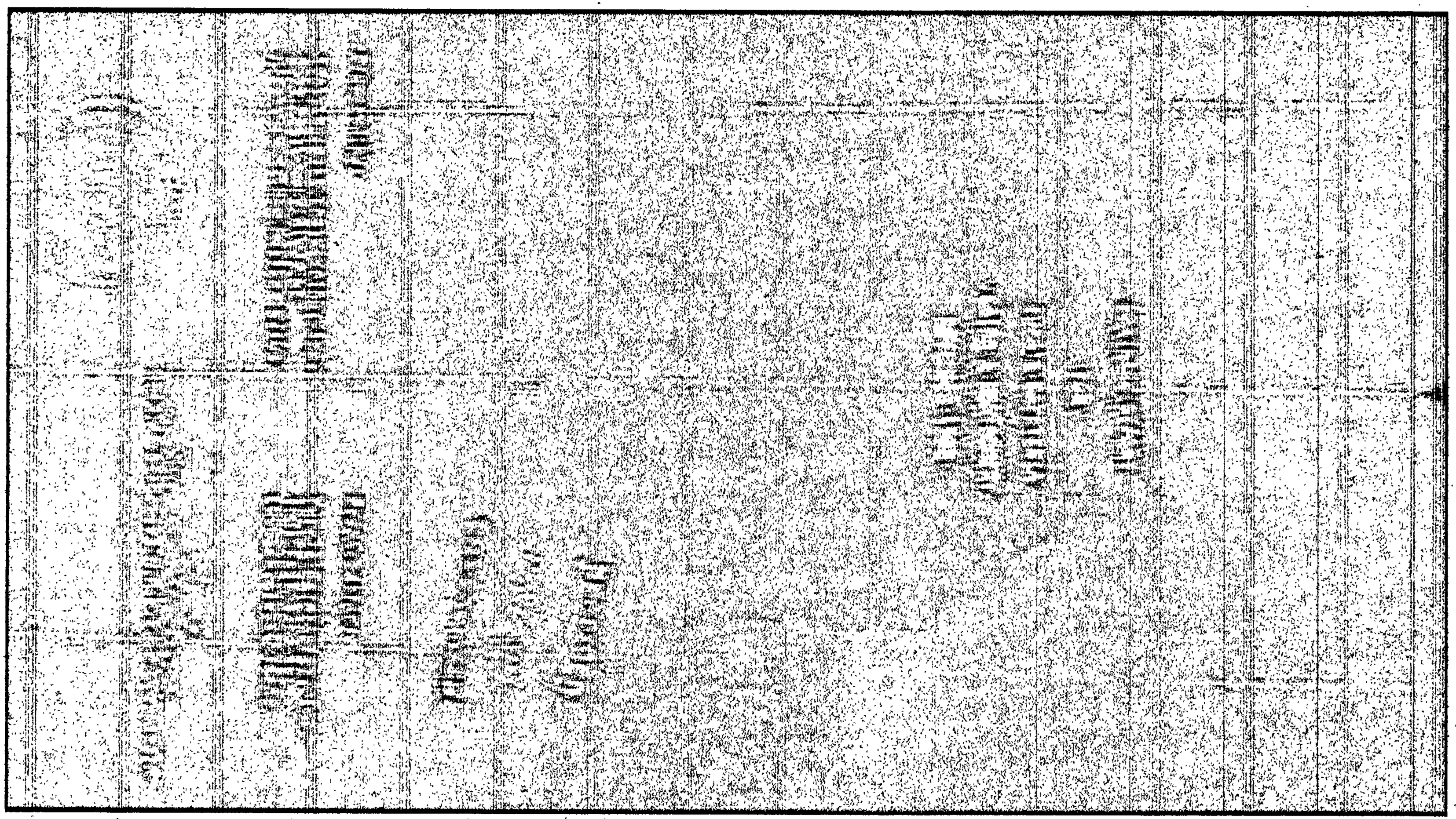

[illegible]

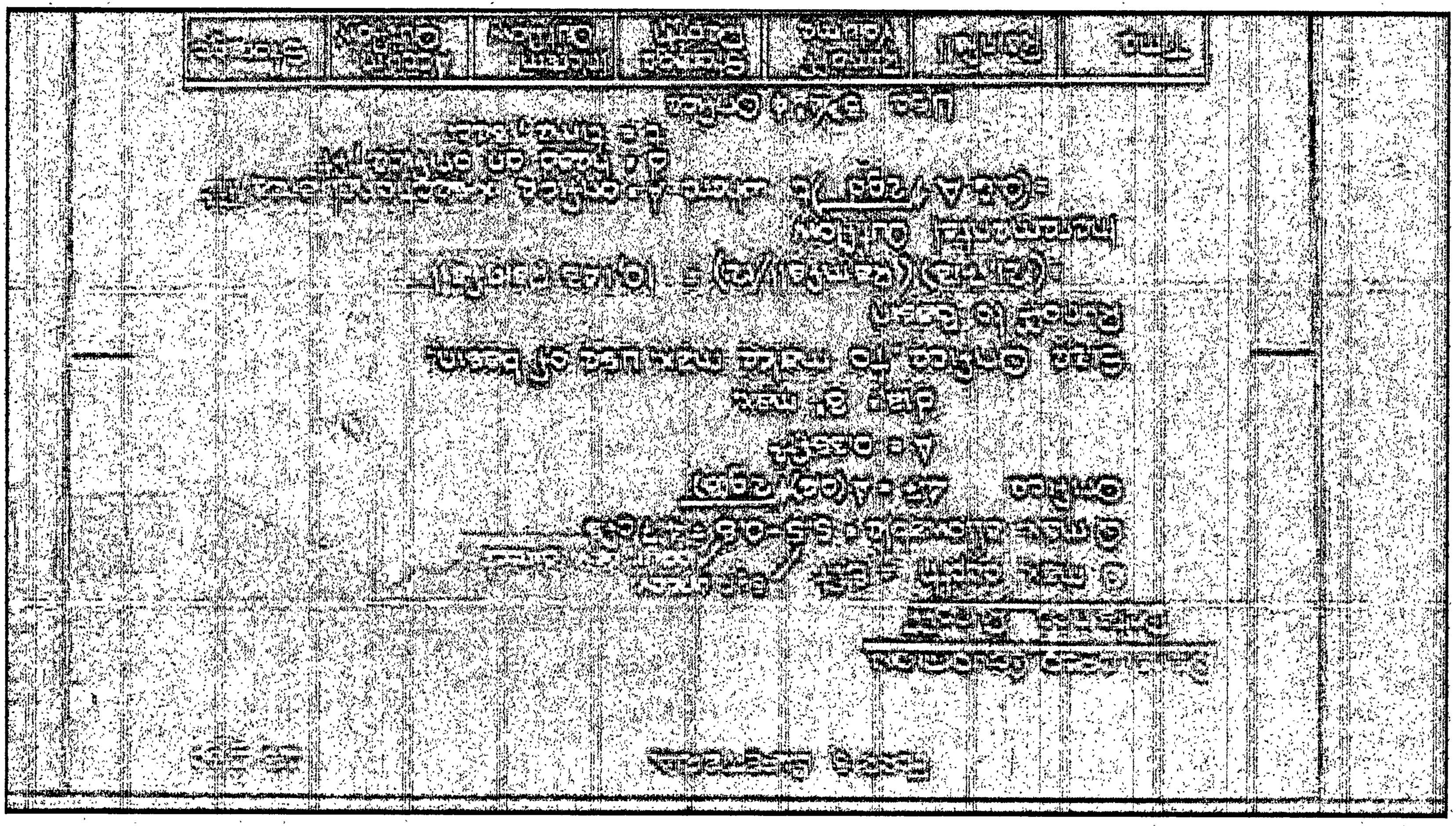

[illegible]

[illegible]

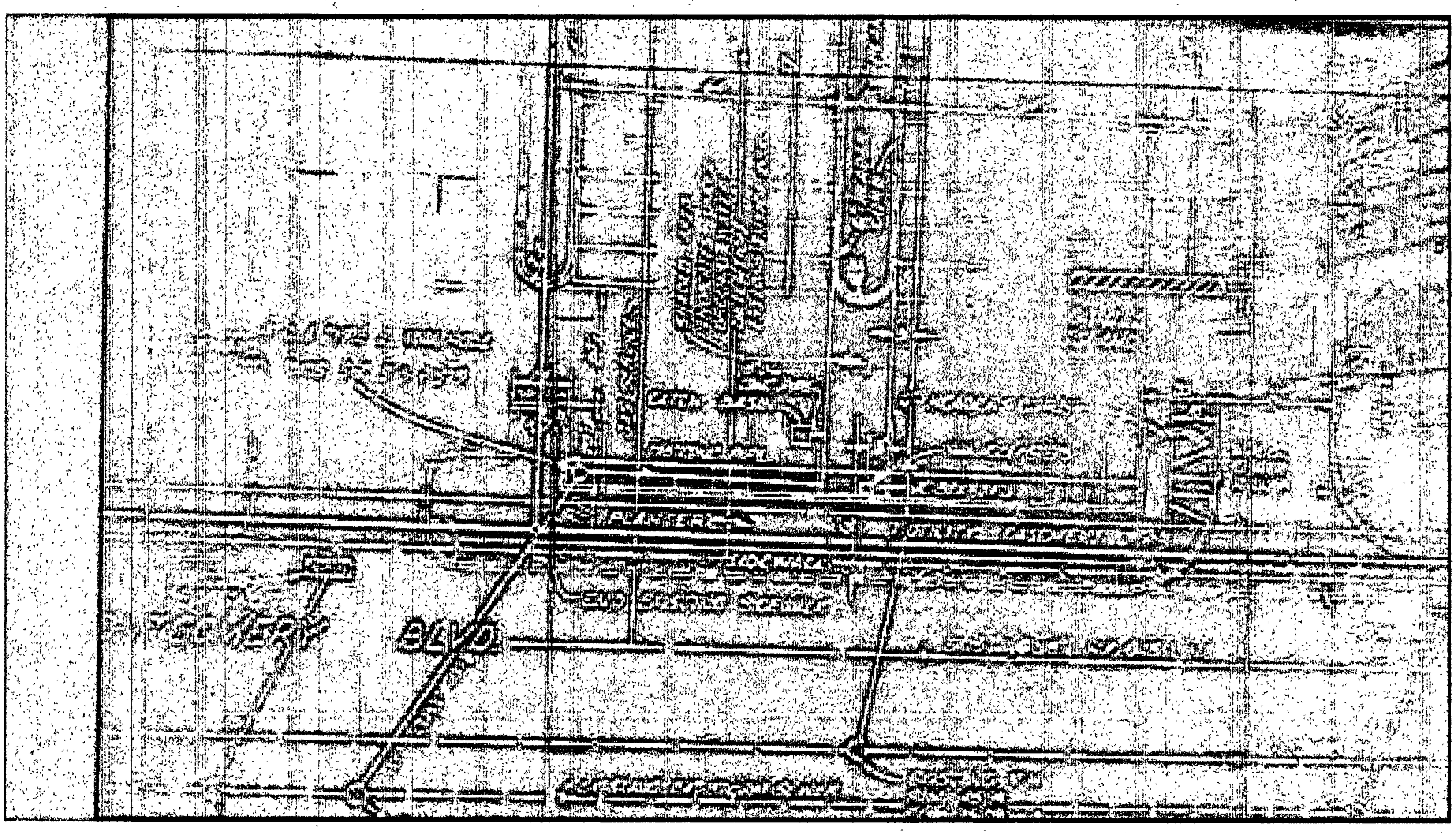

CITY OF ALBUQUERQUE

June 30, 2015

David Soule, PE
Rio Grande Engineering
PO Box 93924
Albuquerque, NM 87199

RE: **Sandia Area Credit Union and Starbucks, 11301 Montgomery Boulevard**
Grading and Drainage Plan
Engineer's Stamp Date 6-29-2015 (File: F22-D002)

Dear Mr. Soule:

This plan is approved for DRB Action for Plat approval provided that the following is addressed and given as part of DRB submittal in advance:

PO Box 1293

Albuquerque

New Mexico 87103

www.cabq.gov

1) The recent grading and drainage plan now shows proposed property lines. Because the north lot is proposed to drain through the system of 12-inch pipes and infiltrators to Montgomery Boulevard within the southern lot, provide private drainage easement from the property line to Montgomery Boulevard that encompasses this system which conveys the northern lot flows. Provide a wide enough easement to incorporate a minimum distance of 5 feet on either side of the proposed infrastructure for this system. Show this proposed easement on an exhibit along with the existing and proposed property lines and proposed drainage infrastructure for preliminary plat approval. Finalization of easement can be provided prior to final plat approval.

Prior to Building Permit approval, provide the following:

2) Provide benchmark and datum.

3) Revise proposed report volumes to match what is on the grading and drainage plan. On Sheet 4, a volume of 2379 cubic feet is listed which does not match the plan, and on the "Weighted E Method", the volumes listed for the infiltrators and for the temporary pond do not match what is on the plan.

4) The Water Quality pond in the center of the site still needs to be revised. The top elevation of 49.25 is adjacent to curb spot elevations of 51.5 and 52.5. Revise as needed.

5) Both the orifice plate detail and Detail "A" have been deleted from the previous submittal. Make sure to also add the size of the orifice on the detail itself that matches the drainage report and list invert elevation on actual detail, too.

6) On the grading and drainage plan, change the verbage "tank" to "infiltrator". Now that multiple chambers are provided, revise the report accordingly on the trench detail which indicates "Multiple chambers not used for this application". For this new layout, show connection from pipe into infiltrator on the plan and show invert elevations at the connection. In lieu of having two bends on the north side it is recommended to make a direct connection into the westernmost series of infiltrators to prevent clogging up of the system.

7) How does the site discharge at 1.30 cfs at elevation 5740 if the invert elevation of the downstream set of infiltrators is set at elevation 5740?

8) Since you have the excerpt from the original report showing the discharge of 4.7 cfs into the original system, also provide that for records for this project, too.

9) Because it is desired to retain first flush for east building, provide curb cuts for parking lot immediately to the west to have a first flush pond west of the parking lot. Then, any additional runoff can drain to the Type "C" inlet to the south.

If you have any questions, you can contact me at 924-3924.

Sincerely,

Jeanne Wolfenbarger, P.E.
Senior Engineer, Planning Dept.
Development Review Services

Orig: Drainage file
c.pdf Addressee via Email

City of Albuquerque

Planning Department

Development & Building Services Division

DRAINAGE AND TRANSPORTATION INFORMATION SHEET

(REV 02/2013)

Project Title: sandia area federal credit union-starbucks Building Permit #: _____ City Drainage #: f22-f002

DRB#: _____ EPC#: _____ Work Order#: _____

Legal Description: lots 3a,3b,3c new holiday park

City Address: 13101 montgomery ne

Engineering Firm: RIO GRANDE ENGINEERING Contact: DAVID SOULE

Address: PO BOX 93924, ALBUQUERQUE, NM 87199

Phone#: 505.321.9099 Fax#: 505.872.0999 E-mail: DAVID@RIOGRANDEENGINEERING.COM

Owner: sandia area federal credit union Contact: _____

Address: _____

Phone#: _____ Fax#: _____ E-mail: _____

Architect: slagle Herr Contact: _____

Address: _____

Phone#: _____ Fax#: _____ E-mail: _____

Surveyor: CONSTRUCTION SURVEY INCORPORATED Contact: JOHN GALLEGOS

Address: _____

Phone#: 917.8921 Fax#: _____ E-mail: _____

Contractor: _____ Contact: _____

Address: _____

Phone#: _____ Fax#: _____ E-mail: _____

TYPE OF SUBMITTAL:

____ DRAINAGE REPORT
X DRAINAGE PLAN 1st SUBMITTAL
____ DRAINAGE PLAN RESUBMITTAL
____ CONCEPTUAL G & D PLAN
____ GRADING PLAN
____ EROSION & SEDIMENT CONTROL PLAN (ESC)
____ ENGINEER'S CERT (HYDROLOGY)
____ CLOMR/LOMR
____ TRAFFIC CIRCULATION LAYOUT (TCL)
____ ENGINEER'S CERT (TCL)
____ ENGINEER'S CERT (DRB SITE PLAN)
____ ENGINEER'S CERT (ESC)
____ SO-19
____ OTHER (SPECIFY)

CHECK TYPE OF APPROVAL/ACCEPTANCE SOUGHT:

____ SIA/FINANCIAL GUARANTEE RELEASE
____ PRELIMINARY PLAT APPROVAL
____ S. DEV. PLAN FOR SUB'D APPROVAL
____ S. DEV. FOR BLDG. PERMIT APPROVAL
____ SECTOR PLAN APPROVAL
____ FINAL PLAT APPROVAL
____ CERTIFICATE OF OCCUPANCY (PERM)
____ CERTIFICATE OF OCCUPANCY (TCL TEMP)
____ FOUNDATION PERMIT APPROVAL
X BUILDING PERMIT APPROVAL
X GRADING PERMIT APPROVAL
____ PAVING PERMIT APPROVAL
____ WORK ORDER APPROVAL
____ GRADING CERTIFICATION
____ SO-19 APPROVAL
____ ESC PERMIT APPROVAL
____ ESC CERT. ACCEPTANCE
____ OTHER (SPECIFY)

As verified

RECEIVED
JUN 29 2015
LAND DEVELOPMENT SECTION

WAS A PRE-DESIGN CONFERENCE ATTENDED: ____ Yes X No ____ Copy Provided

DATE SUBMITTED: 6/29/15 By: _____

Requests for approvals of Site Development Plans and/or Subdivision Plats shall be accompanied by a drainage submittal. The particular nature, location, anc scope to the proposed development defines the degree of drainage detail. One or more of the following levels of submittal may be required based on the followin

1. **Conceptual Grading and Drainage Plan**: Required for approval of Site Development Plans greater than five (5) acres and Sector Plans
2. **Drainage Plans**: Required for building permits, grading permits, paving permits and site plans less than five (5) acres
3. **Drainage Report**: Required for subdivision containing more than ten (10) lots or constituting five (5) acres or more
4. **Erosion and Sediment Control Plan:** Required for any new development and redevelopment site with 1-acre or more of land disturbing area, including project less than 1-acre than are part of a larger common plan of development

David Soule

From: Wolfenbarger, Jeanne [jwolfenbarger@cabq.gov]
Sent: Friday, June 19, 2015 4:08 PM
To: 'David Soule'
Subject: F22-D002 (Sandia Area Federal Credit Union/Starbucks)
Importance: High

David,

I have reviewed the latest drainage submittal and still need to have the following comments addressed prior to approval:

1. If the temporary pond is now sized to handle the 100-year 10-day storm runoff, label the WSEL Elevation within the pond on the plan view. ✓
2. On the actual grading and drainage plan view, label the first flush volume for each run of the storm chambers that corresponds with drainage write-up. Also, label the total volume provided by the storm chambers on the plan view that corresponds with the drainage write-up. (Provide this information directly under the label showing number of storm chambers for each run of the storm chambers.) ✓
3. Label all pipe sizes on the plan. There are some short pipe runs especially from the that are missing pipe size call-outs. ✓
4. Provide detail for the 10-foot by 6" emergency overflow from the temporary pond. List the elevations. (It would make sense that the above invert elevation within the pond is above the WSEL Elevation from the upstream pond when labeling it.) ✓
5. On the water quality pond in the middle of the site, the top elevation of 49.25 is far lower that the adjacent curb cut elevation opening of 52.25 and other adjacent curb elevations. Revise as necessary. ✓
6. On the water quality pond on the west side of the site, there are top of pond elevations of 46.5 shown where the adjacent sidewalk would be approximately 4 feet higher based on the adjacent curb flowline elevations, and the adjacent building is also approximately 4 feet higher. Revise as necessary. ✓
7. There are new 18-inch sidewalk culverts called out on the plan near the water quality pond to the west that have no elevation information listed. Also, how does water drain from the other 18-inch sidewalk culvert to this one? Provide a couple more spot elevations for information. ✓
8. When you mention the cross-lot drainage easements in the write-up, there is only one parcel. (?)

Jeanne

RIO GRANDE ENGINEERING OF NEW MEXICO, LLC

June 29, 2015

Ms. Jeanne Wolfenbarger,PE
Senior Engineer, Planning Department
Development Review
City of Albuquerque

RE: Grading and Drainage Plan
F22-D002
Sandia Area Credit Union

Dear Ms. Wolfenbarger:

The purpose of this letter is to accompany the revised drainage submittal. The plan has been modified to address your written comments dates June 19 2015. The following is a response to your comments

1. We have added the max water surface elevation to the temporary pond.
2. We have added the first flush label on the tanks and labeled the number of tanks
3. We have added note stating all the pipes are 12" HDPE N12-WT
4. We have added a detail for the emergency overflow.
5. We have revised the pond elevation to match surrounding elevations.
6. We have revised the pond elevations to match the surrounding elevations
7. We have added invert elevations to the sidewalk culverts
8. We have shown the property lines on the plan and included a copy of the plat

Should you have any questions regarding this submittal, please do not hesitate to call me.

Sincerely,

David Soule, PE
Rio Grande Engineering
PO Box 93924
Albuquerque, New Mexico 87199

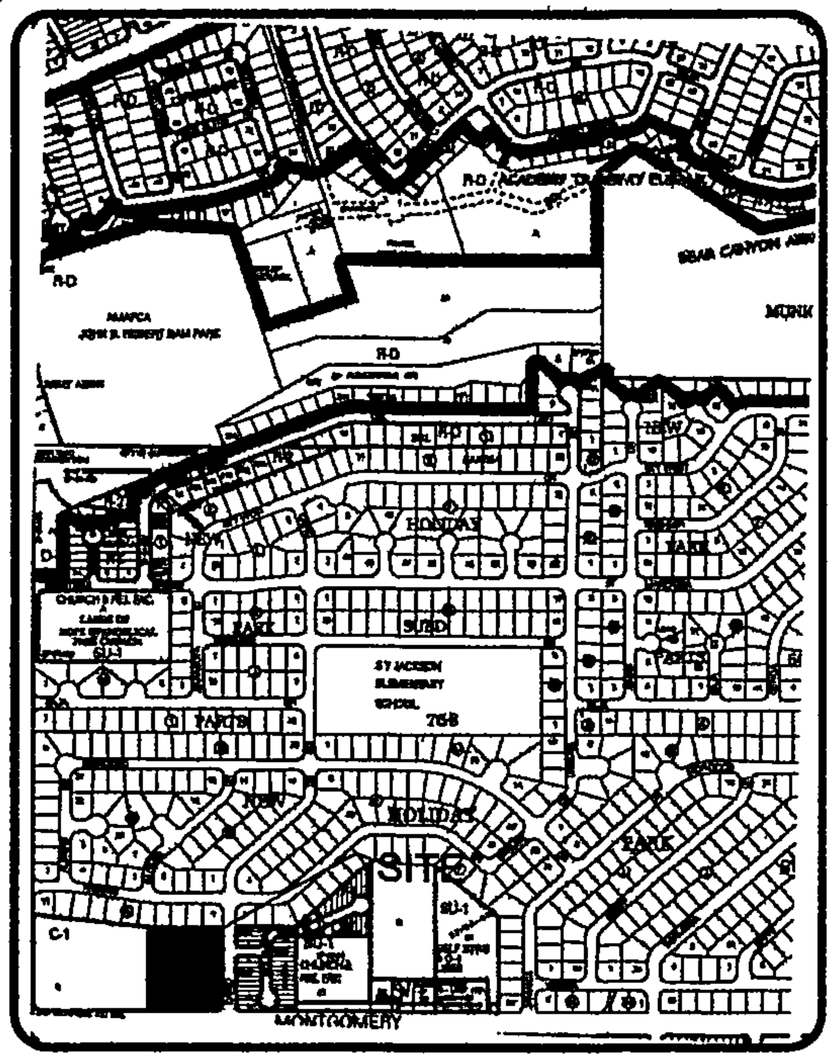

ZONE ATLAS F-22-Z NOT TO SCALE

PURPOSE OF PLAT:

THE PURPOSE OF THIS PLAT IS TO CREATE THREE (3) TRACTS FROM ONE (1), GRANT ADDITIONAL PUBLIC RIGHT OF WAY TO THE CITY OF ALBUQUERQUE IN FEE SIMPLE TITLE WITH WARRANTY COVENANTS, GRANT ADDITIONAL PUBLIC UTILITY EASEMENTS AND CROSS LOT PRIVATE DRAINAGE, RECIPROCAL PARKING, PRIVATE ACCESS EASEMENT AND VACATE A PORTION OF A PUBLIC UTILITY EASEMENT.

NOTES:

1. BEARINGS ARE GRID BASED—NEW MEXICO STATE PLANE CENTRAL ZONE (NAD 1983)
2. ALL DISTANCES SHOWN ARE GROUND DISTANCES.
3. ALL BOUNDARY CORNERS IDENTIFIED AS "SET", ARE 5/8" REBAR WITH CAP STAMPED "PS 21082", AND DEPICTED AS NOTED UNLESS OTHERWISE INDICATED.
4. BEARINGS AND DISTANCES IN ( ) ARE RECORD

SUBDIVISION DATA:

DRB#
ZONE ATLAS INDEX NO. F-22-Z
DATE OF FIELD SURVEY: JANUARY 2015
TOTAL NO. OF TRACTS EXISTING 1
TOTAL NO. OF TRACTS CREATED 3
GROSS SUBDIVISION ACREAGE 3.10724 ACRES
TOTAL RIGHT-OF-WAY DEDICATION ACREAGE 0.07003 ACRES

DOCUMENTS USED:

THE NEW HOLIDAY PARK, VOL D4, FOLIO 57

THIS IS TO CERTIFY THAT TAXES ARE CURRENT AND PAID ON

UNIFORM PROPERTY CODE #:

BERNALILLO COUNTY TREASURE'S OFFICE:

LEGAL DESCRIPTION

TRACT LETTERED "C" OF THE NEW HOLIDAY PARK AS THE SAME IS SHOWN AND DESIGNATED ON THE PLAT FILED FOR RECORD IN THE OFFICE OF THE COUNTY CLERK OF BERNALILLO COUNTY ON JANUARY 15, 1970 IN PLAT BOOK D4, FOLIO 57.

PUBLIC UTILITY EASEMENTS SHOWN ON THIS PLAT ARE GRANTED FOR THE COMMON AND JOINT USE OF:

PUBLIC SERVICE COMPANY OF NEW MEXICO ("PNM"), A NEW MEXICO CORPORATION, (PNM ELECTRIC) FOR THE INSTALLATION, MAINTENANCE, AND SERVICE OF OVERHEAD AND UNDERGROUND ELECTRICAL LINES, TRANSFORMER, AND OTHER EQUIPMENT RELATED FACILITIES REASONABLY NECESSARY TO PROVIDE ELECTRICAL SERVICES.

NEW MEXICO GAS COMPANY FOR INSTALLATION, MAINTENANCE, AND SERVICE OF NATURAL GAS LINES, VALVES AND OTHER EQUIPMENT AND FACILITIES REASONABLY NECESSARY TO PROVIDE NATURAL GAS SERVICES.

QWEST CORPORATION D.B.A. CENTURY LINK QC FOR THE INSTALLATION, MAINTENANCE, AND SERVICE OF SUCH LINES, CABLE, AND OTHER RELATED EQUIPMENT AND FACILITIES REASONABLY NECESSARY TO PROVIDE COMMUNICATION SERVICES.

COMCAST FOR THE INSTALLATION, MAINTENANCE, AND SERVICE OF SUCH LINES, CABLE, AND OTHER RELATED EQUIPMENT AND FACILITIES REASONABLY NECESSARY TO PROVIDE CABLE SERVICES.

INCLUDED, IS THE RIGHT TO REBUILD, CONSTRUCT, RECONSTRUCT, LOCATE, RELOCATE, CHANGE, REMOVE, REPLACE, MODIFY, RENEW, OPERATE AND MAINTAIN FACILITIES FOR PURPOSES DESCRIBED ABOVE, TOGETHER WITH FREE ACCESS TO, FROM, AND OVER SAID EASEMENT, WITH THE RIGHT AND PRIVILEGED OF GOING UPON, OVER AND ACROSS ADJOINING LANDS OF "GRANTOR" FOR PURPOSES SET FORTH HEREIN AND WITH THE RIGHT TO UTILIZE THE RIGHT OF WAY AND EASEMENT TO EXTEND SERVICES TO CUSTOMERS OF "GRANTEE", INCLUDING SUFFICIENT WORKING SPACE FOR ELECTRICAL TRANSFORMERS, WITHIN THE RIGHT AND PRIVILEGE TO TRIM AND REMOVE TREES, SHRUBS OR BUSHES WHICH INTERFERE WITH THE PURPOSES SET FORTH HEREIN. NO BUILDING, SIGN, POOL (ABOVEGROUND OR SUBSURFACE), HOT TUB, CONCRETE OR WOOD DECKING, OR OTHER STRUCTURE SHALL BE ERECTED OR CONSTRUCTED ON SAID EASEMENTS, NOR SHALL ANY WELL BE DRILLED OR OPERATED THEREON. PROPERTY OWNERS SHALL BE SOLELY RESPONSIBLE FOR CORRECTING ANY VIOLATIONS OF NATIONAL ELECTRICAL SAFETY CODE BY CONSTRUCTION OF POOLS, DECKING, OR ANY STRUCTURES ADJACENT TO OR NEAR EASEMENTS SHOWN ON PLAT.

DISCLAIMER

IN APPROVING THIS PLAT, PUBLIC SERVICE COMPANY (PNM), NEW MEXICO GAS COMPANY (NMGC), CENTURY LINK AND COMCAST DID NOT CONDUCT A TITLE SEARCH OF THE PROPERTIES SHOWN HEREON. CONSEQUENTLY PUBLIC SERVICE COMPANY (PNM), NEW MEXICO GAS COMPANY (NMGC), CENTURY LINK AND COMCAST DO NOT WAIVE OR RELEASE ANY EASEMENTS OR ANY EASEMENTS RIGHTS WHICH MAY HAVE BEEN GRANTED BY A PRIOR PLAT, RE-PLAT OR ANY OTHER DOCUMENT AND WHICH ARE NOT SHOWN ON THIS PLAT

FREE CONSENT & DEDICATION

THE UNDERSIGNED OWNER(S) AND PROPRIETOR(S) OF THE LAND HEREIN DESCRIBED AND BEING COMPRISED OF TRACT C OF THE NEW HOLIDAY PARK, CITY OF ALBUQUERQUE, BERNALILLO COUNTY, NEW MEXICO, DO HEREBY CONSENT TO THE SUBDIVISION OF THE PROPERTY AS SHOWN AND THE SAME IS WITH THE FREE CONSENT AND IN ACCORDANCE WITH THE DESIRES OF THE UNDERSIGNED OWNER(S) AND/OR PROPRIETOR(S) AND SAID OWNER(S) AND/OR PROPRIETOR(S) WARRANT THAT THEY HOLD AMONG THEM COMPLETE AND INDEFEASIBLE TITLE IN FEE SIMPLE TO THE PARCEL(S) HEREIN DESCRIBED AND DEDICATE RIGHT OF WAY TO THE CITY OF ALBUQUERQUE IN FEE SIMPLE WITH WARRANTY COVENANTS AND GRANT ANY EASEMENTS AS SHOWN HEREON AND CONSENT TO THE VACATION OF ALL EASEMENTS SHOWN HEREON. SAID OWNER(S) AND/OR PROPRIETOR(S) DO HEREBY REPRESENT THAT THEY ARE SO AUTHORIZED TO ACT.

BY: _____ 5-14-15
OWNER/DATE

ACKNOWLEDGMENT

STATE OF NM)
)SS.
COUNTY OF Bernalillo)

OFFICIAL SEAL
E MANZ
Notary Public
State of New Mexico
My Comm. Expires 9/29/18

THIS INSTRUMENT WAS ACKNOWLEDGED BEFORE ME ON THIS 14th DAY OF May, 2015, BY scott connely.

NOTARY PUBLIC: _____
MY COMMISSION EXPIRES: 9/29/2018

SOLAR COLLECTION NOTE:

PER SECTION 14-14-4-7 OF THE SUBDIVISION ORDINANCE

NO PROPERTY WITHIN THE AREA OF THIS PLAT SHALL AT ANY TIME BE SUBJECT TO DEED RESTRICTION, COVENANT OR BUILDING AGREEMENT PROHIBITING SOLAR COLLECTORS FROM BEING INSTALLED ON BUILDING OR BEING ERECTED ON THE LOTS OR PARCELS WITHIN THE AREA OF THIS PLAT. THE FOREGOING REQUIREMENT SHALL BE A CONDITION TO THE APPROVAL OF THIS PLAT.

SHEET INDEX

PAGE 1. COVER
PAGE 2. SUBDIVISION PLAT

SUBDIVISION PLAT OF
TRACTS C-1, C-2 AND C-3
THE NEW HOLIDAY PARK

BEING A RE-PLAT OF
TRACT "C"
THE NEW HOLIDAY PARK
PROJECTED SECTION 34, T 11 N, R 4 E, N.M.P.M.
ELENA GALLEGOS LAND GRANT
CITY OF ALBUQUERQUE, BERNALILLO COUNTY, NEW MEXICO
JANUARY 2015

PROJECT NUMBER:_____

CITY APPROVALS:

CITY SURVEYOR Loren N. Richards P.S.	5/26/15 DATE
TRAFFIC ENGINEERING, TRANSPORTATION DIVISION	DATE
UTILITIES DEVELOPMENT	DATE
PARKS AND RECREATION DEPARTMENT	DATE
A.M.A.F.C.A.	DATE
ABCWUA	DATE
CITY ENGINEER	DATE
DRB CHAIRPERSON, PLANNING DEPARTMENT	DATE
REAL PROPERTY DIVISION	DATE

UTILITY APPROVALS:

PNM ELECTRIC SERVICES	DATE
NEW MEXICO GAS	DATE
QWEST CORPORATION D.B.A. CENTURY LINK QC	DATE
COMCAST	DATE

SURVEYOR'S CERTIFICATE:

I, DAVID P ACOSTA, NEW MEXICO PROFESSIONAL SURVEYOR NO. 21082, DO HEREBY CERTIFY THAT THIS PLAT AND THE ACTUAL SURVEY ON THE GROUND UPON WHICH IT IS BASED WAS PERFORMED BY ME OR UNDER MY DIRECT SUPERVISION; MEETS THE MINIMUM REQUIREMENTS FOR MONUMENTATION AND SURVEYS OF THE CITY OF ALBUQUERQUE SUBDIVISION ORDINANCE; SHOWS ALL EASEMENTS ON SUBJECT TRACT(S) AS SHOWN ON THE PLAT OF RECORD OR MADE KNOWN TO ME BY THE OWNER(S), UTILITY COMPANIES OR OTHER PARTIES EXPRESSING AN INTEREST; MEETS THE MINIMUM STANDARDS FOR SURVEYING IN NEW MEXICO AS ADOPTED BY THE NEW MEXICO BOARD OF REGISTRATION FOR PROFESSIONAL ENGINEERS AND SURVEYORS EFFECTIVE MAY 1, 2007; AND THAT THIS IS TRUE AND CORRECT TO THE BEST OF MY KNOWLEDGE AND BELIEF.

DAVID P. ACOSTA NEW MEXICO 21082 PROFESSIONAL SURVEYOR

_____ 05-11-2016
DAVID P. ACOSTA, NMPLS NO. 21082 DATE

CONSTRUCTION SURVEY TECHNOLOGIES, INC
MAILING: PO BOX 65395, ALBUQUERQUE, NM 87193 505-817-8921
OFFICE: 1606 CENTRAL AVE SE, SUITE 101, ALBUQUERQUE, NM 87106
NMSURVEYOR@GMAIL.COM

SUBDIVISION PLAT OF

TRACTS C-1, C-2 AND C-3 THE NEW HOLIDAY PARK

BEING A RE-PLAT OF
TRACT "C"
THE NEW HOLIDAY PARK
PROJECTED SECTION 34, T 11 N, R 4 E, N.M.P.M.
ELENA GALLEGOS LAND GRANT
CITY OF ALBUQUERQUE, BERNALILLO COUNTY, NEW MEXICO
JANUARY 2015

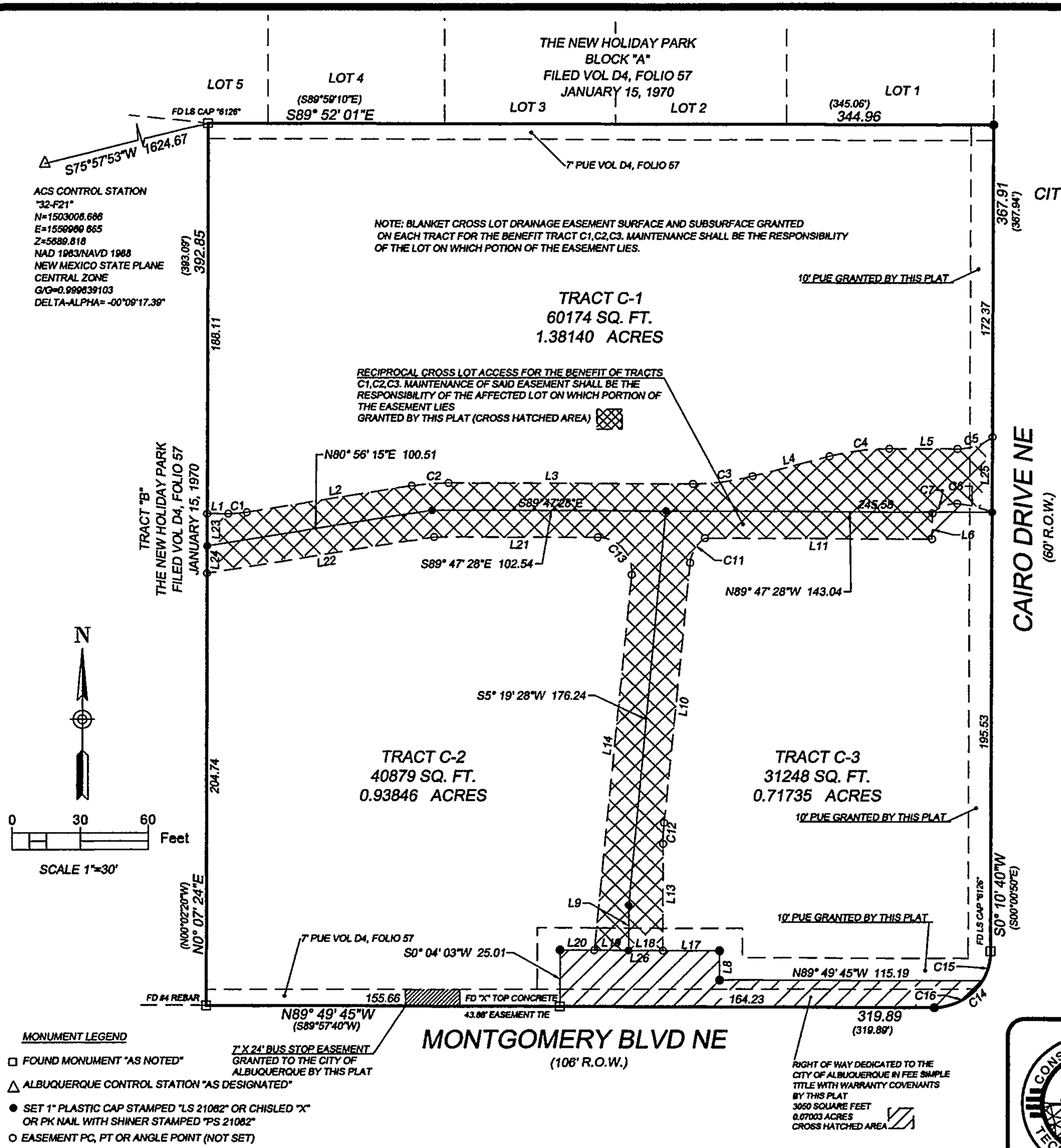

LINE TABLE		
Line #	Length	Direction
L1	9.21	N89° 47' 28"W
L2	73.81	S80° 51' 07"W
L3	107.19	N89° 47' 28"W
L4	34.82	S75° 02' 24"W
L5	29.89	N89° 47' 28"W
L6	11.50	S0° 53' 18"W
L8	13.10	S0° 05' 09"W
L9	20.26	S0° 12' 32"W
L10	116.38	S5° 38' 06"W
L11	99.60	S89° 47' 28"E
L13	47.54	S0° 12' 32"W
L14	168.29	N5° 38' 06"E
L17	24.94	N89° 49' 45"W
L18	15.01	N89° 49' 45"W
L19	15.07	N89° 49' 45"W

LINE TABLE		
Line #	Length	Direction
L20	15.04	S89° 49' 45"E
L21	71.75	S89° 47' 28"E
L22	101.52	S80° 51' 07"W
L23	14.37	S3° 03' 21"E
L24	12.16	S0° 07' 24"W
L25	33.52	S0° 10' 40"W
L26	70.07	N89° 49' 45"W

CURVE TABLE					
Curve #	Length	Radius	Delta	Chord Direction	Chord Length
C1	8.17	50.00	9°21'24"	N85° 31' 49"E	8.16
C2	16.33	100.00	9°21'24"	S85° 31' 49"W	16.31
C3	26.47	100.00	15°10'06"	N82° 37' 28"E	26.40
C4	26.47	100.00	15°10'06"	S82° 37' 28"W	26.40
C5	16.52	25.06	37°46'27"	N71° 10' 46"E	16.23
C6	15.87	55.34	16°26'01"	N76° 06' 39"W	15.82
C7	11.90	14.56	46°50'27"	S68° 45' 13"W	11.57
C11	13.09	15.00	49°58'52"	S30° 37' 34"W	12.67
C12	9.47	100.00	5°25'37"	S2° 55' 20"W	9.47
C13	24.98	15.00	95°25'37"	N42° 04' 40"W	22.19
C14	39.15	25.00	89°42'50"	S44° 38' 06"W	35.27
C15	13.94	25.00	31°57'05"	N15° 45' 16"E	13.76
C16	25.20	25.00	57°45'44"	N60° 36' 41"E	24.15

MONUMENT LEGEND

- □ FOUND MONUMENT "AS NOTED"
- △ ALBUQUERQUE CONTROL STATION "AS DESIGNATED"
- ● SET 1" PLASTIC CAP STAMPED "LS 21082" OR CHISLED "X" OR PK NAIL WITH SHINER STAMPED "PS 21082"
- O EASEMENT PC, PT OR ANGLE POINT (NOT SET)

CONSTRUCTION SURVEY TECHNOLOGIES, INC
MAILING: PO BOX 65395, ALBUQUERQUE, NM 87193 505-917-6921
OFFICE: 1606 CENTRAL AVE SE, SUITE 101, ALBUQUERQUE, NM 87106
NMSURVEYOR@GMAIL.COM

Wolfenbarger, Jeanne

From: Wolfenbarger, Jeanne
Sent: Friday, June 19, 2015 4:08 PM
To: 'David Soule'
Subject: F22-D002 (Sandia Area Federal Credit Union/Starbucks)

Importance: High

David,

I have reviewed the latest drainage submittal and still need to have the following comments addressed prior to approval:

1. If the temporary pond is now sized to handle the 100-year 10-day storm runoff, label the WSEL Elevation within the pond on the plan view.
2. On the actual grading and drainage plan view, label the first flush volume for each run of the storm chambers that corresponds with drainage write-up. Also, label the total volume provided by the storm chambers on the plan view that corresponds with the drainage write-up. (Provide this information directly under the label showing number of storm chambers for each run of the storm chambers.)
3. Label all pipe sizes on the plan. There are some short pipe runs especially from the that are missing pipe size call-outs.
4. Provide detail for the 10-foot by 6" emergency overflow from the temporary pond. List the elevations. (It would make sense that the above invert elevation within the pond is above the WSEL Elevation from the upstream pond when labeling it.)
5. On the water quality pond in the middle of the site, the top elevation of 49.25 is far lower that the adjacent curb cut elevation opening of 52.25 and other adjacent curb elevations. Revise as necessary.
6. On the water quality pond on the west side of the site, there are top of pond elevations of 46.5 shown where the adjacent sidewalk would be approximately 4 feet higher based on the adjacent curb flowline elevations, and the adjacent building is also approximately 4 feet higher. Revise as necessary.
7. There are new 18-inch sidewalk culverts called out on the plan near the water quality pond to the west that have no elevation information listed. Also, how does water drain from the other 18-inch sidewalk culvert to this one? Provide a couple more spot elevations for information.
8. When you mention the cross-lot drainage easements in the write-up, there is only one parcel. (?)

Jeanne

Verbal

City of Albuquerque

Planning Department

Development & Building Services Division

DRAINAGE AND TRANSPORTATION INFORMATION SHEET

(REV 02/2013)

Project Title: sandia area federal credit union-starbucks Building Permit #: _____ City Drainage #: f22-f002

DRB#: _____ EPC#: _____ Work Order#: _____

Legal Description: lots 3a,3b,3c new holiday park

City Address: 13101 montgomery ne

Engineering Firm: RIO GRANDE ENGINEERING Contact: DAVID SOULE

Address: PO BOX 93924, ALBUQUERQUE, NM 87199

Phone#: 505.321.9099 Fax#: 505.872.0999 E-mail: DAVID@RIOGRANDEENGINEERING.COM

Owner: sandia area federal credit union Contact: _____

Address: _____

Phone#: _____ Fax#: _____ E-mail: _____

Architect: slagle Herr Contact: _____

Address: _____

Phone#: _____ Fax#: _____ E-mail: _____

Surveyor: CONSTRUCTION SURVEY INCORPORATED Contact: JOHN GALLEGOS

Address: _____

Phone#: 917.8921 Fax#: _____ E-mail: _____

Contractor: _____ Contact: _____

Address: _____

Phone#: _____ Fax#: _____ E-mail: _____

TYPE OF SUBMITTAL:

- ____ DRAINAGE REPORT
- X DRAINAGE PLAN 1st SUBMITTAL
- X DRAINAGE PLAN RESUBMITTAL
- ____ CONCEPTUAL G & D PLAN
- ____ GRADING PLAN
- ____ EROSION & SEDIMENT CONTROL PLAN (ESC)
- ____ ENGINEER'S CERT (HYDROLOGY)
- ____ CLOMR/LOMR
- ____ TRAFFIC CIRCULATION LAYOUT (TCL)
- ____ ENGINEER'S CERT (TCL)
- ____ ENGINEER'S CERT (DRB SITE PLAN)
- ____ ENGINEER'S CERT (ESC)
- ____ SO-19
- ____ OTHER (SPECIFY)

CHECK TYPE OF APPROVAL/ACCEPTANCE SOUGHT:

- ____ SIA/FINANCIAL GUARANTEE RELEASE
- ____ PRELIMINARY PLAT APPROVAL
- ____ S. DEV. PLAN FOR SUB'D APPROVAL
- ____ S. DEV. FOR BLDG. PERMIT APPROVAL
- ____ SECTOR PLAN APPROVAL
- ____ FINAL PLAT APPROVAL
- ____ CERTIFICATE OF OCCUPANCY (PERM)
- ____ CERTIFICATE OF OCCUPANCY (TCL TEMP)
- ____ FOUNDATION PERMIT APPROVAL
- X BUILDING PERMIT APPROVAL
- X GRADING PERMIT APPROVAL
- ____ PAVING PERMIT APPROVAL
- ____ WORK ORDER APPROVAL
- ____ GRADING CERTIFICATION
- ____ SO-19 APPROVAL
- ____ ESC PERMIT APPROVAL
- ____ ESC CERT. ACCEPTANCE
- ____ OTHER (SPECIFY)

No Varified

RECEIVED
JUN 18 2015
LAND DEVELOPMENT SECTION

WAS A PRE-DESIGN CONFERENCE ATTENDED: ____ Yes X No ____ Copy Provided

DATE SUBMITTED: ~~5/29/15~~ 6/18/15 By: _____

Requests for approvals of Site Development Plans and/or Subdivision Plats shall be accompanied by a drainage submittal. The particular nature, location, anc scope to the proposed development defines the degree of drainage detail. One or more of the following levels of submittal may be required based on the followin

1. **Conceptual Grading and Drainage Plan**: Required for approval of Site Development Plans greater than five (5) acres and Sector Plans
2. **Drainage Plans**: Required for building permits, grading permits, paving permits and site plans less than five (5) acres
3. **Drainage Report**: Required for subdivision containing more than ten (10) lots or constituting five (5) acres or more
4. **Erosion and Sediment Control Plan:** Required for any new development and redevelopment site with 1-acre or more of land disturbing area, including project less than 1-acre than are part of a larger common plan of development

RIO GRANDE ENGINEERING OF NEW MEXICO, LLC

March 24, 2015

Ms. Jeanne Wolfenbarger,PE
Senior Engineer, Planning Department
Development Review
City of Albuquerque

RE: Grading and Drainage Plan
F22-D002
11301 Montgomery

Dear Ms. Wolfenbarger:

The purpose of this letter is to accompany the revised drainage submittal. The plan has been modified to address your written comments dates June 12 2015. The following is a response to your comments

1. We have added the first flush calculation to the hydraulic calculations in appendix A, We have shown roof and flow arrows. The entire flow passes thru the infiltrators and the outlet elevation provides the volume, as shown on the elevation-volume spread sheet located in appendix b
2. We have added flow arrows
3. We have not added elevations at the islands, we are not depressing the islands but allowing the water to pass thru and top the curb on the low side
4. We have added the spot elevations at the street and adjacent building
5. The plan has changed due to uncertainty with what the future lot will look like. Due to the slope and nature of our drainage solution. We do not want bare dirt areas to contribute to our infiltrator systems, therefore we have modified the plan to retain the entire 100-year,10-day volume generated within that basin. We have shown that 30 infiltrators with invert at 39.5 will be a reasonable solution when it develops, we have added stub for that to occur. We have added rip rap at the flow concentrations
6. We have included a 11x17 basin map
7. We have added the elation of the inlet and added an orifice plat detail
8. We have labeled the junction boxes and corrected the typo
9. Appendix B and C contain the volume calculations for each tank section as well as a summary based upon the elevations. The pond calculation spreadsheet is a stage-storage chart that was used for the pond routing volumes in the AHYMO
10. The discharge rate of 4.7 was the rate designated for the site on the initial development
11. We have labeled the number of chambers and included a modification to the detail for a single row

12. We have labeled the inlets and referenced the location of the structures on the calculation. The type D inlet is provided only to provide adequate box to construct orifice control most flow will not enter that inlet, inlet D is designed for all flow so the capacity of the type D inlet s not relevant
13. The dumpster was revised, and the spot elevations corrected
14. Note #1 on right hand side of sheet notes all elevations are flow lines
15. We have corrected the AHYMO for 15 minute increments and corrected the input so there is not the phantom flow
16. As discussed in the meeting the asphalt warps at that area and gutter not needed

Should you have any questions regarding this submittal, please do not hesitate to call me.

Sincerely,

David Soule, PE
Rio Grande Engineering
PO Box 93924
Albuquerque, New Mexico 87199

CITY OF ALBUQUERQUE

June 12, 2015

David Soule, PE
Rio Grande Engineering
PO Box 93924
Albuquerque, NM 87199

RE: **Sandia Area Credit Union and Starbucks, 11301 Montgomery Boulevard**
Grading and Drainage Plan
Engineer's Stamp Date 6-01-2015 (File: F22-D002)

Dear Mr. Soule:

Based upon the information provided in your submittal received 6-01-15, the above referenced plan cannot be approved for Building Permit until the following comments are addressed:

PO Box 1293

Albuquerque

New Mexico 87103

www.cabq.gov

1) Show first flush calculation within the report. Show roof drain locations, and explain how first flush is being managed especially with regard to impervious facilities on the east side of the site. It appears as though an additional first flush pond may be needed to handle first flush from the building on the southeast corner of the site with added curb cuts to allow drainage into the pond from the drive-thru area. Label all first flush ponds as "first flush" along with volume information.

2) Show flow arrows and lot lines on the grading and drainage plan.

3) What are the curb cuts in the medians to the north of the Starbucks for? If a first flush pond was intended here, label it, and provide elevation and volume information. Provide curb flowline elevations at all curb openings.

4) Show existing curb elevations on Cairo at the access point, and show existing elevations along west property line to show how these existing elevations relate to new elevations. On the north side of the site, provide elevations for the existing building that abuts the property line, and ensure that the new contours tie into the correct existing contours.

5) Discuss what the temporary pond is for. What is the sizing of it based on since the 100-year 6-hour volume is much higher for Basin A? Discuss what the plans are for Basin A since an impervious area of 0.988 acres was given in the computations.

Also provide riprap within the proposed swale to the bottom of the pond from the east to prevent erosion.

6) Provide a larger basin map. An 11x17 would be easier to read along with upsizing of the text for the labeling of the basins.

7) Label grate elevation for the new Type "D" inlet. Provide a detail showing all elevation information for inlet including information for orifice. Show how this inlet ties into the storm chambers with pipe invert and size information.

8) Label size of Nyloplat junction boxes and the pipes that tie into the storm chambers. Between the high invert elevation of 48.00 for discharge from the site and the high invert elevations of the connecting nyloplat junction boxes, how does the entire system manage to drain, given that the top of the storm chambers are set at elevation 42.50??

9) For the AHYMO Run, show what the pond routing information is based on. Provide computations based on orifice for which the elevations given match what is on the plan.

10) Discuss what the downstream capacity of 4.7 cfs for the existing outlet is based on. The proposed discharge flow should match downstream capacity.

11) On the proposed layout for the storm chambers with the report, label the number of chambers used and the volume of each chamber. Then provide the overall volume for the chamber on this sheet and on the plan view. Provide a cross-sectional view of the storm chamber similar to what is shown on the report showing a detail of the stone and fabric surrounding it if it is just for one row. (It should be similar to the cross-section provided in the report for the multiple chambers.)

12) In the report, explain location of infrastructure for which capacities calculations were provided. Where is there a channel? What are the "Volume Computations" based on? Also include capacity calculations for the sidewalk culvert and for the Type "D" inlet within the "Inlet Capacity Calculations". On the plan view for the grading and drainage plan, label the discharge flow from the site, and label the flow captured at each of the inlets.

13) North of the credit union building, there is a curb cut elevation at an elevation of 49.40 which should be lowered if the intent is to drain to the "water quality pond". Also, the nearby "water quality" pond is labeled at an elevation of 46.50 for the top elevation. Correct discrepancy. Also, provide additional elevation information for the corners of the trash receptacle area.

14) If the proposed elevations shown are at flowline, provide general note to this effect.

15) Show AHYMO Run in 10-minute increments until about 90% of the pond has drained to demonstrate a more clear relationship between inflow and outflow. How does the pond have a constant outflow of 1.68 cfs for a time period of more than 8 days when it peaks at 1.75 hours??

16) Provide a small valley gutter from the sidewalk culvert from Starbucks across the accessway to prevent flow from discharging out the accessway.

If you have any questions, you can contact me at 924-3924.

Sincerely,

Jeanne Wolfenbarger, P.E.
Senior Engineer, Planning Dept.
Development Review Services

Orig: Drainage file
c.pdf Addressee via Email

emergency Spill way c Pd.). & Volume c

REVISED
DRAINAGE REPORT

For

SANDIA AREA FEDERAL CREDIT UNION/STARBUCKS
11301 MONTOMERY NE
Albuquerque, New Mexico

Prepared by

Rio Grande Engineering
PO Box 93924
Albuquerque, New Mexico 87199

JUNE 2015

6/18/15
David Soule P.E. No. 14522

REVISED
DRAINAGE REPORT

For

SANDIA AREA FEDERAL CREDIT UNION/STARBUCKS
11301 MONTOMERY NE
Albuquerque, New Mexico

Prepared by

Rio Grande Engineering
PO Box 93924
Albuquerque, New Mexico 87199

JUNE 2015

6/18/15
David Soule P.E. No. 14522

TABLE OF CONTENTS

Purpose 3
Introduction 3
Existing Conditions 3
Exhibit A-Vicinity Map 4
Proposed Conditions 5
Summary 5

Appendix

Site hydrology and hydraulic calculations ..... A
AHYMO Proposed ..... B
AHYMO Future C
ADS infiltrator specifications ..... D

Map

Site Grading and Drainage Plan

PURPOSE

The purpose of this report is to provide the Drainage Management Plan for the redevelopment of a 3 acre property located at 11301 Montgomery. This plan was prepared in accordance with the City of Albuquerque design regulations, utilizing the City of Albuquerque's Development Process Manual drainage guidelines. This report will demonstrate that the grading does not adversely affect the surrounding properties, nor the upstream or downstream facilities.

INTRODUCTION

The subject of this report, as shown on the Exhibit A, is a 3 -acre parcel of land located on the north side of Montgomery between Cairo and Juan Tabo NE The legal description of this site is tract c1,c2,c3 of the New Holiday Park subdivision. As shown on FIRM map35013C0144G, the entire site is located within Flood Zone X. The site has been fully developed in the past and this is a redevelopment of this site.

The site was designed and constructed with a buried retention tank and metered outflow. The outflow was limited to the 100-year 6-hour discharge rate assuming 100% native. The proposed development shall match existing patterns and limit the flow to similar rate. In addition the site shall retain onsite the first flush volume required.

EXISTING CONDITIONS

The site currently is graded per the grading plan F22-d2. The site drains to a single type d inlet. This inlet is connected to a large underground concrete vault. The outlet is sized such that the flow will not exceed 4.7 cfs.

PROPOSED CONDITIONS

The proposed improvements consist of removal the replacement of the existing pavement and the construction of two new buildings and one parcel for future development. The lots have cross lot drainage easements and will free discharge to two inlets that are connected to an underground infiltration chamber. The site contains 5 onsite sub basins, which were partitioned to verify the capacity of each collection and conveyance structure. Basins E and D discharge 4.69 cfs to a type C inlet at the southwest corner of the site. Basin B and C discharge 3.95 cfs to a type C inlet located at the west property line. Basin A is a future development and will retain its developed flow onsite of 5600 cubic feet, with and emergency overflow. Once the flows are captured they are stored in the infiltration system and metered out by a 9" orifice plate on the existing storm drain stub. The system was modeled using the AHYMO computer program. The site was modeled for the interim condition and ultimate condition. As shown in appendix B, in the interim condition the site will discharge 3.98 cfs to the existing Montgomery storm system. In the ultimate condition the site will discharge 5.28 cfs which exceeds the existing by .58 cfs, which when the development occurs can be reduced by additional throttling of that discharge. The ultimate condition model located in appendix c was included as a guide for the future development. The interim condition which we are constructing discharges less than existing

The first flush volume is captured within the infiltrator tanks, the outlet of tank 1 is set at 40, which will retain the first 2379 cubic feet which is more than the 1922 cubic feet required. When the rear pad is developed the first flush volume will be retained by setting the outlet elevation of the tanks. A copy of the site hydrology and capacity calculations is included in appendix A. The tank volumes and stage storage spread sheet as well as the AHYMO model is included in appendix B for the proposed and ultimate conditions are in appendix C. The infiltrator details are located in appendix C.

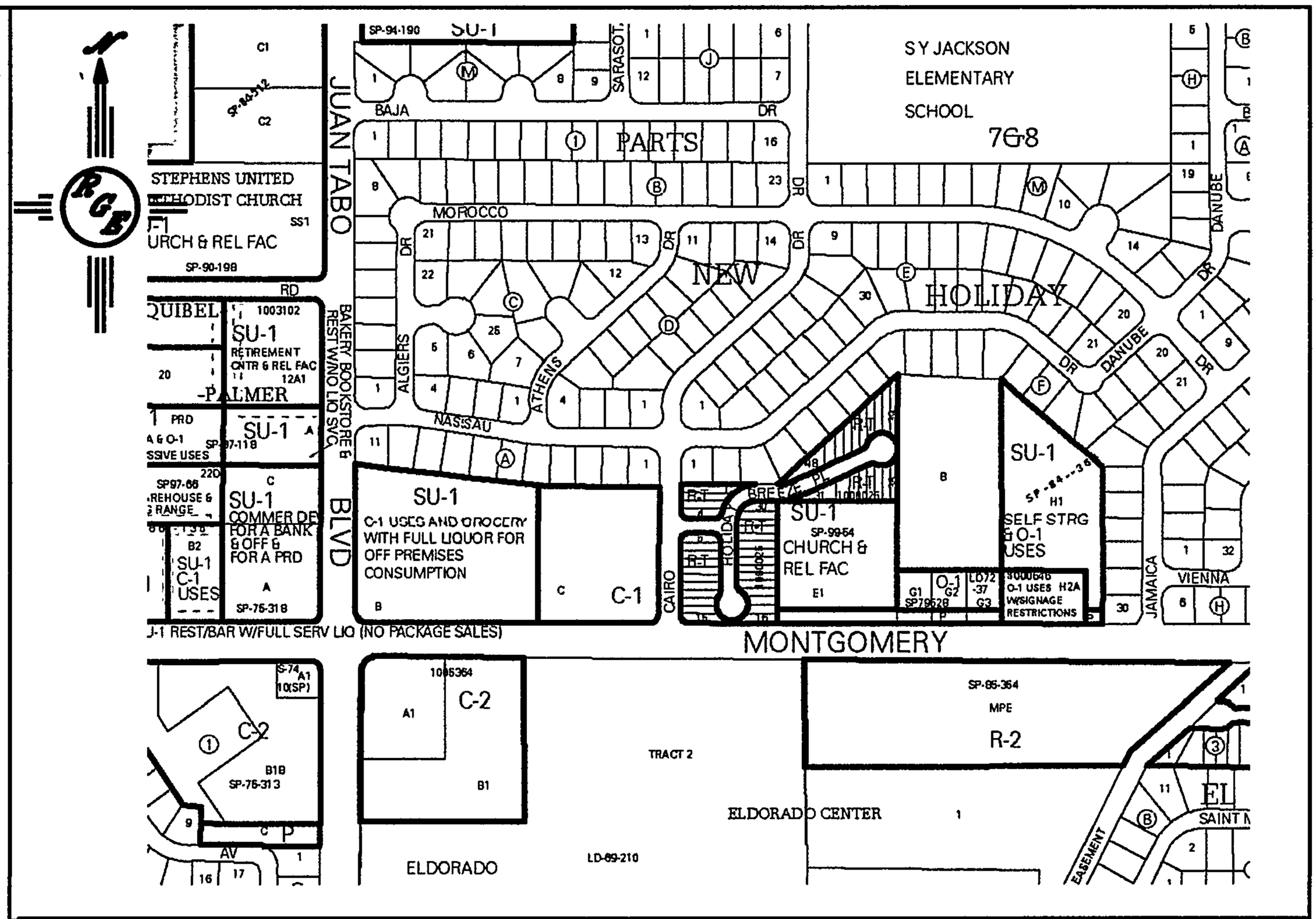

VICINITY MAP: F-22-Z

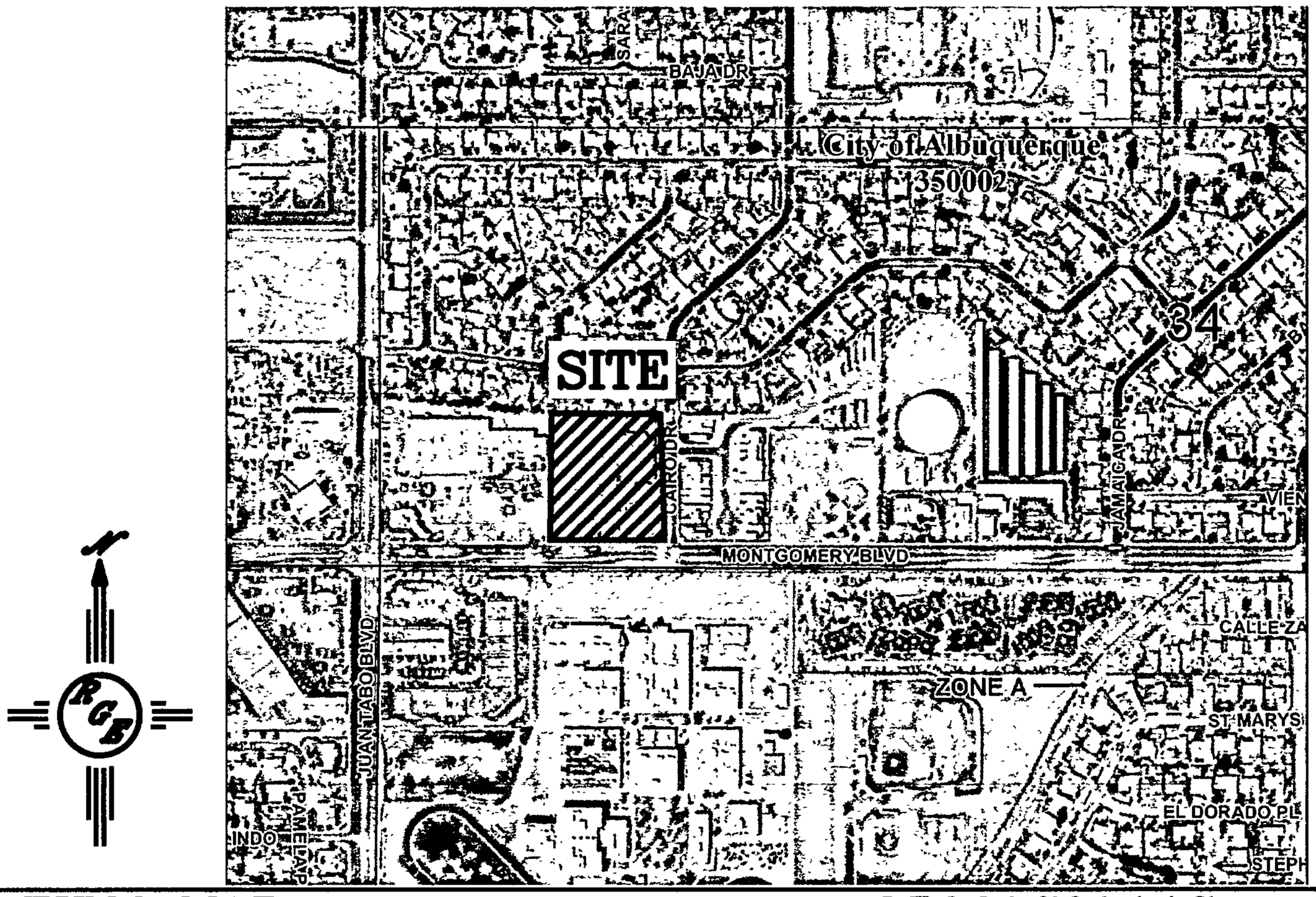

FIRM MAP: 35001C0144G

SUMMARY AND RECOMMENDATIONS

This project is a redevelopment of an existing site. The redevelopment is consistent with the approved grading plan. The proposed site will discharge less than existing and retain the first flush volume. The development will not affect the upstream or downstream properties or infrastructure. Since the effected area site encompasses more than 1 acre, a NPDES permit will be required prior to any construction activity.

APPENDIX A

SITE HYDROLOGY AND HYDRAULIC CALCULATIONS

EROSION CONTROL NOTES:

1. CONTRACTOR IS RESPONSIBLE FOR OBTAINING A TOPSOIL DISTURBANCE PERMIT PRIOR TO BEGINNING WORK.

2. CONTRACTOR IS RESPONSIBLE FOR MAINTAINING RUN-OFF ON SITE DURING CONSTRUCTION.

3. CONTRACTOR IS RESPONSIBLE FOR CLEANING ALL SEDIMENT THAT GETS INTO EXISTING RIGHT-OF-WAY.

4. REPAIR OF DAMAGED FACILITIES AND CLEANUP OF SEDIMENT ACCUMULATIONS ON ADJACENT PROPERTIES AND IN PUBLIC FACILITIES IS THE RESPONSIBILITY OF THE CONTRACTOR.

5. ALL EXPOSED EARTH SURFACES MUST BE PROTECTED FROM WIND AND WATER EROSION PRIOR TO FINAL ACCEPTANCE OF ANY PROJECT.

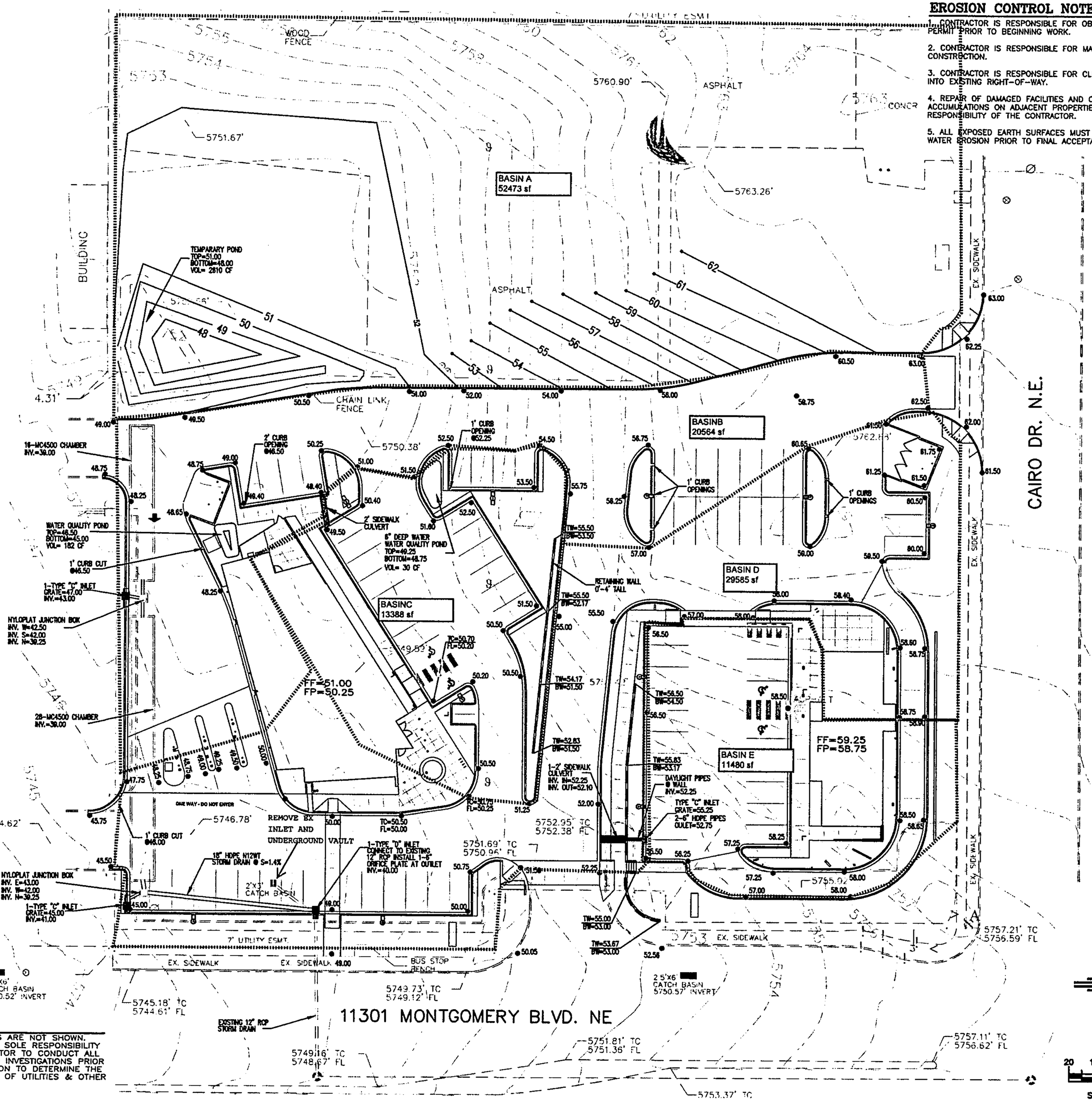

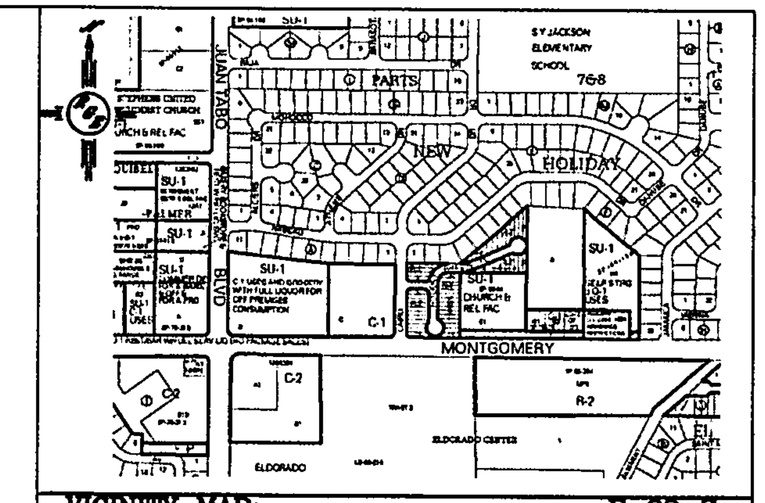

VICINITY MAP: F-22-Z

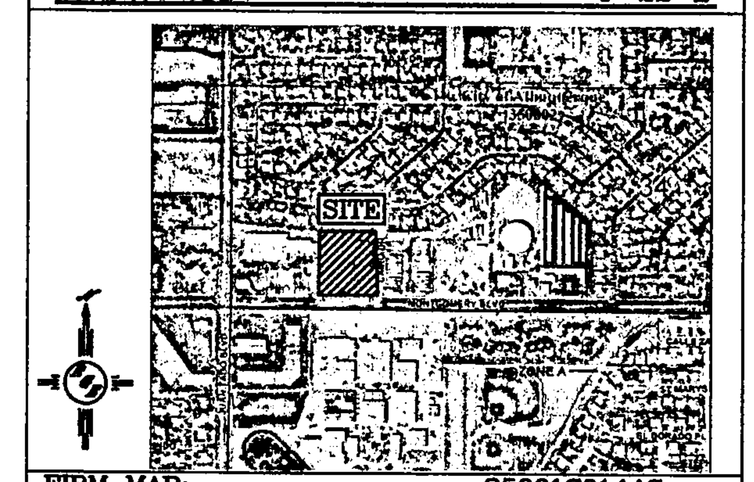

FIRM MAP: 35001C0144G

LEGAL DESCRIPTION:

TRACT C, THE NEW HOLIDAY PARK SUBDIVISION
CITY OF ALBUQUERQUE
BERNALILLO COUNTY, NEW MEXICO

NOTES:

1. ALL SPOT ELEVATIONS REPRESENT FLOWLINE ELEVATION UNLESS OTHERWISE NOTED.
2. UNDERGROUND WATER RETENTION SYSTEM SHALL BE STORM TECH MC4500.00

LEGEND

- EXISTING CONTOUR
- EXISTING INDEX CONTOUR
- PROPOSED CONTOUR
- PROPOSED INDEX CONTOUR
- LOT LINE
- CENTERLINE
- RIGHT-OF-WAY
- EXTENDED STEM WALL SEE ARCH PLANS FOR DETAILS
- PROPOSED ROCK FACE WALL
- EXISTING CURB AND GUTTER
- PROPOSED EDGE OF CONCRETE
- PROPOSED FLOWLINE
- EXISITNG WALL

I DAVID SOULE, HAVE PERSONALLY INSPECTED THE PROPERTY ON X-XX-13. NO EARTHWORK HAS BEEN PERFORMED AND THE SITE IS CONSISTENT WITH THE TOPO SHOWN.

DAVID SOULE P.E. #14522 DATE

CAUTION:

EXISTING UTILITIES ARE NOT SHOWN. IT SHALL BE THE SOLE RESPONSIBILITY OF THE CONTRACTOR TO CONDUCT ALL NECESSARY FIELD INVESTIGATIONS PRIOR TO ANY EXCAVATION TO DETERMINE THE ACTUAL LOCATION OF UTILITIES & OTHER IMPROVEMENTS.

SCALE: 1"=20'

ENGINEER'S SEAL DAVID SOULE NEW MEXICO 14522 REGISTERED PROFESSIONAL ENGINEER 3/17/15 DAVID SOULE P.E. #14522	Safca & Starbuc GRADING AND DRAINAGE PLAN Rio Grande Engineering 1496 CENTRAL AVENUE SUITE 201 ALBUQUERQUE, NM 87106 (505) 872-0999	DRAWN BY DEM DATE 8-14 Safca & Starbuc GRD Plan.dwg SHEET # 1 of 1 JOB # XXXXX

Weighted E Method

Existing Developed Basins

											100-Year, 6-hr.			10-day
Basin	Area (sf)	Area (acres)	Treatment A %	Treatment A (acres)	Treatment B %	Treatment B (acres)	Treatment C %	Treatment C (acres)	Treatment D %	Treatment D (acres)	Weighted E (ac-ft)	Volume (ac-ft)	Flow cfs	Volume (ac-ft)
BASIN A	52473	1.205	0%	0	15.0%	0.181	5.0%	0.06023	80%	0.964	2.347	0.236	5.81	0.364
BASIN A(interim)	52473	1.205	0%	0	45.0%	0.542	50.0%	0.60231	5%	0.060	1.348	0.135	4.15	0.143
BASIN B	20564	0.472	0%	0	6.0%	0.028	5.0%	0.0236	89%	0.420	2.487	0.098	2.38	0.154
BASIN C	13388	0.307	0%	0	14.0%	0.043	10.0%	0.03073	76%	0.234	2.304	0.059	1.47	0.090
BASIN D	29585	0.679	0%	0	8.0%	0.054	5.0%	0.03396	87%	0.591	2.456	0.139	3.39	0.218
BASIN E	11480	0.264	0%	0	10.0%	0.026	5.0%	0.01318	85%	0.224	2.425	0.053	1.30	0.083
DRAINS TO ROW	4811	0.110	0%	0	10.0%	0.011	10.0%	0.01104	80%	0.088	0.410	0.004	0.10	0.016
TOTAL ONSITE	184774	4.242	0%		20.9%	0.886	18.3%	0.775	61%	2.581		0.724	18.59	
ALLOWED				0.000		0.152		0.037		0.544		-0.138	4.7CFS	-0.210

Equations:

Weighted E = Ea*Aa + Eb*Ab + Ec*Ac + Ed*Ad / (Total Area)

Volume = Weighted D * Total Area

132301

Flow = Qa * Aa + Qb * Ab + Qc * Ac + Qd * Ad 179963

-47662

Where for 100-year, 6-hour storm (zone 4)

Ea= 0.8	Qa= 2.2
Eb= 1.08	Qb= 2.92
Ec= 1.46	Qc= 3.73
Ed= 2.64	Qd= 5.25

water harvet volume	67823*.341/12	1995.98	interim only- future will contain first flush
provided		2379.00	infiltrator below oulet (40.00)
		6244.29	temp pond for undeveloped tract(100-year,10-day volume)

DROP INLET CALCULATIONS

INLET	TYPE OF INLET	AREA (SF)	Q (CFS)	H (FT)	H ALLOW (FT)
B	SINGLE C	3.84	7.7	0.1734	0.5
D	SINGLE C	3.84	9.38	0.2574	0.5

ORIFICE EQUATION

Q = CA sqrt(2gH)

C = 0.6

g = 32.2

INLET B=BASIN B+C=	3.85 CFS	7.7
INLET D=BASIN D+E=	4.69 CFS	9.38

DOUBLED FLOW FOR CLOGGING FACTOR

Channel Capacity

	Top Width	Bottom Width	Depth	Area	WP	R	Slope	Q Provided	Q Required	Velocity	
	(ft)	(ft)	(ft)	(ft^2)	(ft)		(%)	(cfs)	(cfs)	(ft/s)	
Beginning	2	2	0.5	1.00	3.00	0.3333333	2	3.38	1.30	1.30	sidewalk culvert at basin E
Beginning	1.5	1.5	0.5	0.75	2.50	0.3	2	2.36	1.47	1.96	sidewalk culvert at basin C
Beginning	10	6	0.5	4.00	10.12	0.3951357	1	10.70	5.81	1.45	retention pond overflow at basinA

<u>Manning's Equation:</u>

Q = 1.49/n * A * R^(2/3) * S^(1/2)

A = Area

R = D/4

S = Slope

n = 0.03

APPENDIX B

TANK VOLUMES/STAGE STORAGE/AHYMO

PROPOSED

```
*S      AHYMO - safcu
*S              POND ROUTING

START                 TIME=0.0  PUNCH CODE=0


RAINFALL              TYPE=1
                      QUARTER=0.0    ONE= 2.20 IN
                      SIX= 2.90 IN   DAY= 3.70 IN   DT = 0.05 HR


COMPUTE NM HYD        ID=1  HYD NO=101  DA= .00243 SQ MI
                      PER A=00  PER B=12  PER C=6  PER D=82
                      TP=-.139 MASSRAIN=-1


PRINT HYD             ID=1  CODE=20


* ROUTE THE TOTAL FLOW THROUGH THE PROPOSED RESERVOIR
ROUTE RESERVOIR       ID=2   HYD NO=102   INFLOW=1   CODE=3
                      OUTFLOW(CFS)    STORAGE(AC-FT)    ELEV(FT)
                             0.00            0.03         39.00
                             1.30            0.06          40.00
                             1.99            0.07          40.50
                             2.49            0.08          41.00
                             2.91            0.10          41.50
                             3.28            0.11          42.00
                             3.61            0.12          42.50
                             3.91            0.13          43.00
                             4.19            0.14          43.50
                             4.45            0.15          44.00
                             4.70            0.15          44.50

                             4.93            0.16          45.00
                             5.16            0.16          45.50
                             5.37            0.17          46.00
PRINT HYD             ID=2   CODE=20


FINISH
```

```
        AHYMO PROGRAM (AHYMO-S4)                    - Version: S4.01a - Rel: 01a
             RUN DATE (MON/DAY/YR) = 06/17/2015
             START TIME (HR:MIN:SEC) = 18:40:36     USER NO.=
RioGrandeSingleA41963517
             INPUT FILE =
Settings\Owner\Desktop\2014jobs\1498-11301MONTGOMERY\interimPONROUTING061615.txt


    *S      AHYMO - safcu
    *S              POND ROUTING

    START                TIME=0.0  PUNCH CODE=0


    RAINFALL             TYPE=1
                         QUARTER=0.0    ONE= 2.20 IN
                         SIX= 2.90 IN   DAY= 3.70 IN   DT = 0.05 HR



                     6-HOUR RAINFALL DIST. - BASED ON NOAA ATLAS 14 FOR CONVECTIVE
AREAS (NM & AZ) - D1
                     DT =   0.050000 HOURS       END TIME =     6.000000 HOURS
                       0.0000  0.0047  0.0095  0.0146  0.0201  0.0259  0.0323
                       0.0415  0.0561  0.0718  0.0881  0.1056  0.1235  0.1418
                       0.1608  0.1800  0.2012  0.2234  0.2472  0.2763  0.3081
                       0.3508  0.3991  0.4587  0.5383  0.6279  0.7825  1.0229
                       1.4348  1.7243  1.9526  2.0673  2.1679  2.2402  2.2976
                       2.3477  2.3844  2.4181  2.4459  2.4701  2.4926  2.5127
                       2.5318  2.5487  2.5648  2.5804  2.5955  2.6079  2.6148
                       2.6216  2.6284  2.6346  2.6409  2.6469  2.6529  2.6588
                       2.6644  2.6699  2.6753  2.6806  2.6859  2.6909  2.6958
                       2.7007  2.7055  2.7103  2.7148  2.7194  2.7238  2.7282
                       2.7325  2.7368  2.7410  2.7452  2.7493  2.7534  2.7574
                       2.7614  2.7654  2.7692  2.7731  2.7769  2.7807  2.7844
                       2.7881  2.7917  2.7953  2.7989  2.8024  2.8059  2.8094
                       2.8128  2.8162  2.8196  2.8229  2.8262  2.8295  2.8327
                       2.8359  2.8391  2.8422  2.8453  2.8484  2.8515  2.8546
                       2.8576  2.8606  2.8635  2.8665  2.8694  2.8723  2.8751
                       2.8780  2.8808  2.8836  2.8864  2.8892  2.8919  2.8946
                       2.8973  2.9000

    COMPUTE NM HYD       ID=1  HYD NO=101  DA= .00243 SQ MI
                         PER A=00  PER B=12  PER C=6  PER D=82
                         TP=-.139 MASSRAIN=-1


             K =  0.075755HR    TP =  0.139000HR    K/TP RATIO =  0.545000     SHAPE
CONSTANT, N =  7.106428
             UNIT PEAK =   7.5443    CFS   UNIT VOLUME =   0.9972       B =   526.28
 P60 = 2.2000
             AREA =     0.001993 SQ MI    IA =   0.10000 INCHES    INF =   0.04000
INCHES PER HOUR
             RUNOFF COMPUTED BY INITIAL ABSTRACTION/INFILTRATION NUMBER METHOD - DT =
0.050000


             K =  0.131509HR    TP =  0.139000HR    K/TP RATIO =  0.946108     SHAPE
CONSTANT, N =  3.736321
```

UNIT PEAK = 1.0611 CFS UNIT VOLUME = 0.9881 B = 337.19
P60 = 2.2000
AREA = 0.000437 SQ MI IA = 0.45000 INCHES INF = 1.11000
INCHES PER HOUR
RUNOFF COMPUTED BY INITIAL ABSTRACTION/INFILTRATION NUMBER METHOD - DT =
0.050000

PRINT HYD ID=1 CODE=20

PARTIAL HYDROGRAPH 101.00

TIME HRS	FLOW CFS	TIME HRS	FLOW CFS	TIME HRS	FLOW CFS
0.000	0.0	2.000	1.2	4.000	0.1
6.000	0.1				
1.000	0.5	3.000	0.1	5.000	0.1

RUNOFF VOLUME = 2.38959 INCHES = 0.3097 ACRE-FEET
PEAK DISCHARGE RATE = 7.51 CFS AT 1.500 HOURS BASIN AREA =
0.0024 SQ. MI.

* ROUTE THE TOTAL FLOW THROUGH THE PROPOSED RESERVOIR
ROUTE RESERVOIR ID=2 HYD NO=102 INFLOW=1 CODE=3

OUTFLOW(CFS)	STORAGE(AC-FT)	ELEV(FT)
0.00	0.03	39.00
1.30	0.06	40.00
1.99	0.07	40.50
2.49	0.08	41.00
2.91	0.10	41.50
3.28	0.11	42.00
3.61	0.12	42.50
3.91	0.13	43.00
4.19	0.14	43.50
4.45	0.15	44.00
4.70	0.15	44.50
4.93	0.16	45.00
5.16	0.16	45.50
5.37	0.17	46.00

* * * * * * * * * * * * * * * * *

TIME (HRS)	INFLOW (CFS)	ELEV (FEET)	VOLUME (AC-FT)	OUTFLOW (CFS)
0.00	0.00	39.00	0.030	0.00
0.15	0.00	39.00	0.030	0.00
0.30	0.00	39.00	0.030	0.00
0.45	0.00	39.00	0.030	0.00
0.60	0.04	39.00	0.030	0.00
0.75	0.32	39.07	0.032	0.09
0.90	0.43	39.16	0.035	0.21
1.05	0.61	39.26	0.038	0.34
1.20	1.09	39.42	0.043	0.55
1.35	2.56	39.80	0.054	1.04
1.50	7.51	41.34	0.094	2.77
1.65	4.75	43.06	0.131	3.95

1.80	2.35	42.73	0.125	3.75
1.95	1.36	41.72	0.104	3.07
2.10	0.88	41.08	0.083	2.56
2.25	0.61	40.29	0.066	1.69
2.40	0.45	39.85	0.056	1.11
2.55	0.25	39.60	0.048	0.78
2.70	0.17	39.42	0.043	0.54
2.85	0.12	39.29	0.039	0.38
3.00	0.10	39.20	0.036	0.27
3.15	0.09	39.15	0.034	0.19
3.30	0.08	39.11	0.033	0.15
3.45	0.07	39.09	0.033	0.12
3.60	0.07	39.08	0.032	0.10
3.75	0.07	39.07	0.032	0.09
3.90	0.07	39.06	0.032	0.08
4.05	0.07	39.06	0.032	0.07
4.20	0.07	39.05	0.032	0.07
4.35	0.06	39.05	0.032	0.07
4.50	0.06	39.05	0.032	0.07
4.65	0.06	39.05	0.032	0.07
4.80	0.06	39.05	0.032	0.07
4.95	0.06	39.05	0.031	0.06
5.10	0.06	39.05	0.031	0.06
5.25	0.07	39.05	0.031	0.06
5.40	0.07	39.05	0.032	0.07
5.55	0.07	39.05	0.032	0.07
5.70	0.07	39.05	0.032	0.07
5.85	0.07	39.05	0.032	0.07
6.00	0.07	39.05	0.032	0.07
6.15	0.03	39.05	0.031	0.06
6.30	0.01	39.03	0.031	0.04
6.45	0.00	39.02	0.031	0.03
6.60	0.00	39.01	0.030	0.02
6.75	0.00	39.01	0.030	0.01
6.90	0.00	39.00	0.030	0.01
7.05	0.00	39.00	0.030	0.00

PEAK DISCHARGE = 3.976 CFS - PEAK OCCURS AT HOUR 1.70
MAXIMUM WATER SURFACE ELEVATION = 43.117
MAXIMUM STORAGE = 0.1323 AC-FT INCREMENTAL TIME= 0.050000HRS

PRINT HYD ID=2 CODE=20

PARTIAL HYDROGRAPH 102.00

TIME HRS	FLOW CFS	TIME HRS	FLOW CFS	TIME HRS	FLOW CFS
0.000	0.0	2.000	2.9	4.000	0.1
6.000	0.1				
1.000	0.3	3.000	0.3	5.000	0.1
7.000	0.0				

RUNOFF VOLUME = 2.38948 INCHES = 0.3097 ACRE-FEET
PEAK DISCHARGE RATE = 3.98 CFS AT 1.700 HOURS BASIN AREA = 0.0024 SQ. MI.

FINISH

NORMAL PROGRAM FINISH END TIME (HR:MIN:SEC) = 18:40:36

tank 1

Project:

StormTech
Detention • Retention • Water Quality
A division of ADS

Chamber Model -	MC-4500	
Units -	Imperial	Click Here for Metric
Number of Chambers -	14	
Number of End Caps -	2	
Voids in the stone (porosity) -	30	%
Base of Stone Elevation -	37.00	ft
Amount of Stone Above Chambers -	12	in
Amount of Stone Below Chambers -	12	in
Area of system -	692	sf Min. Area - 576 sf min. area

☑ Include Perimeter Stone in Calculations

Height of System (inches)	Incremental Single Chamber (cubic feet)	Incremental Single End Cap (cubic feet)	Incremental Chambers (cubic feet)	Incremental End Cap (cubic feet)	Incremental Stone (cubic feet)	Incremental Ch, EC and Stone (cubic feet)	Cumulative System (cubic feet)	Elevation (feet)
84	0.00	0.00	0.00	0.00	17.30	17.30	2546.96	44.00
83	0.00	0.00	0.00	0.00	17.30	17.30	2529.66	43.92
82	0.00	0.00	0.00	0.00	17.30	17.30	2512.36	43.83
81	0.00	0.00	0.00	0.00	17.30	17.30	2495.06	43.75
80	0.00	0.00	0.00	0.00	17.30	17.30	2477.76	43.67
79	0.00	0.00	0.00	0.00	17.30	17.30	2460.46	43.58
78	0.00	0.00	0.00	0.00	17.30	17.30	2443.16	43.50
77	0.00	0.00	0.00	0.00	17.30	17.30	2425.86	43.42
76	0.00	0.00	0.00	0.00	17.30	17.30	2408.56	43.33
75	0.00	0.00	0.00	0.00	17.30	17.30	2391.26	43.25
74	0.00	0.00	0.00	0.00	17.30	17.30	2373.96	43.17
73	0.00	0.00	0.00	0.00	17.30	17.30	2356.66	43.08
72	0.04	0.00	0.57	0.00	17.13	17.70	2339.36	43.00
71	0.12	0.01	1.63	0.02	16.81	18.45	2321.66	42.92
70	0.16	0.03	2.31	0.05	16.59	18.95	2303.20	42.83
69	0.21	0.05	2.92	0.10	16.39	19.41	2284.25	42.75
68	0.27	0.07	3.76	0.14	16.13	20.02	2264.84	42.67
67	0.45	0.09	6.34	0.18	15.35	21.86	2244.82	42.58
66	0.67	0.11	9.31	0.23	14.44	23.98	2222.96	42.50
65	0.80	0.14	11.19	0.28	13.86	25.33	2198.98	42.42
64	0.91	0.17	12.71	0.34	13.39	26.43	2173.65	42.33
63	1.00	0.19	14.04	0.38	12.97	27.40	2147.22	42.25
62	1.09	0.22	15.22	0.43	12.60	28.26	2119.82	42.17
61	1.16	0.24	16.29	0.48	12.27	29.04	2091.56	42.08
60	1.23	0.27	17.28	0.54	11.96	29.77	2062.52	42.00
59	1.30	0.30	18.20	0.60	11.66	30.45	2032.75	41.92
58	1.36	0.32	19.05	0.65	11.39	31.09	2002.30	41.83
57	1.42	0.35	19.86	0.70	11.13	31.69	1971.21	41.75
56	1.47	0.37	20.63	0.74	10.89	32.26	1939.51	41.67
55	1.53	0.39	21.35	0.79	10.66	32.80	1907.26	41.58
54	1.57	0.42	22.04	0.83	10.44	33.31	1874.46	41.50
53	1.62	0.44	22.70	0.88	10.23	33.81	1841.14	41.42
52	1.67	0.46	23.33	0.93	10.02	34.28	1807.34	41.33
51	1.71	0.48	23.93	0.97	9.83	34.73	1773.06	41.25
50	1.75	0.50	24.50	1.01	9.65	35.16	1738.33	41.17
49	1.79	0.53	25.05	1.05	9.47	35.57	1703.18	41.08
48	1.83	0.55	25.58	1.09	9.30	35.97	1667.61	41.00
47	1.86	0.56	26.09	1.13	9.13	36.35	1631.64	40.92
46	1.90	0.58	26.58	1.17	8.98	36.72	1595.28	40.83
45	1.93	0.60	27.05	1.20	8.83	37.07	1558.56	40.75
44	1.96	0.62	27.50	1.24	8.68	37.42	1521.49	40.67
43	2.00	0.64	27.93	1.28	8.54	37.75	1484.07	40.58
42	2.03	0.66	28.35	1.31	8.40	38.06	1446.33	40.50
41	2.05	0.67	28.75	1.35	8.27	38.37	1408.27	40.42
40	2.08	0.69	29.14	1.38	8.14	38.67	1369.90	40.33
39	2.11	0.71	29.51	1.41	8.02	38.95	1331.23	40.25
38	2.13	0.72	29.87	1.45	7.90	39.23	1292.28	40.17
37	2.16	0.74	30.22	1.48	7.79	39.49	1253.06	40.08
36	2.18	0.76	30.56	1.51	7.68	39.75	1213.57	40.00
35	2.21	0.77	30.88	1.54	7.57	39.99	1173.82	39.92
34	2.23	0.79	31.19	1.57	7.47	40.23	1133.82	39.83
33	2.25	0.80	31.48	1.60	7.37	40.46	1093.59	39.75
32	2.27	0.82	31.77	1.64	7.28	40.69	1053.13	39.67
31	2.29	0.84	32.05	1.68	7.18	40.91	1012.44	39.58
30	2.31	0.85	32.31	1.69	7.10	41.10	971.53	39.50
29	2.33	0.86	32.56	1.72	7.02	41.30	930.43	39.42
28	2.34	0.87	32.81	1.74	6.93	41.49	889.13	39.33
27	2.36	0.89	33.04	1.77	6.86	41.67	847.65	39.25
26	2.38	0.90	33.26	1.80	6.78	41.84	805.98	39.17
25	2.39	0.91	33.47	1.82	6.71	42.01	764.14	39.08
24	2.41	0.92	33.68	1.84	6.64	42.16	722.14	39.00
23	2.42	0.93	33.87	1.87	6.58	42.32	679.97	38.92
22	2.43	0.95	34.05	1.89	6.52	42.46	637.66	38.83
21	2.44	0.96	34.23	1.91	6.46	42.60	595.19	38.75
20	2.46	0.97	34.39	1.93	6.40	42.73	552.60	38.67
19	2.47	0.98	34.55	1.96	6.35	42.85	509.87	38.58

tank 2

Project:

StormTech
Detention • Retention • Water Quality
A division of ADS

Chamber Model -	MC-4500	
Units -	Imperial	Click Here for Metric
Number of Chambers -	24	
Number of End Caps -	2	
Voids in the stone (porosity) -	30	%
Base of Stone Elevation -	38.00	ft
Amount of Stone Above Chambers -	12	in
Amount of Stone Below Chambers -	12	in
Area of system -	1086	sf Min. Area - 942 sf min. area

☑ Include Perimeter Stone in Calculations

Height of System (inches)	Incremental Single Chamber (cubic feet)	Incremental Single End Cap (cubic feet)	Incremental Chambers (cubic feet)	Incremental End Cap (cubic feet)	Incremental Stone (cubic feet)	Incremental Ch, EC and Stone (cubic feet)	Cumulative System (cubic feet)	Elevation (feet)
84	0.00	0.00	0.00	0.00	27.15	27.15	4119.90	45.00
83	0.00	0.00	0.00	0.00	27.15	27.15	4092.75	44.92
82	0.00	0.00	0.00	0.00	27.15	27.15	4065.60	44.83
81	0.00	0.00	0.00	0.00	27.15	27.15	4038.45	44.75
80	0.00	0.00	0.00	0.00	27.15	27.15	4011.30	44.67
79	0.00	0.00	0.00	0.00	27.15	27.15	3984.15	44.58
78	0.00	0.00	0.00	0.00	27.15	27.15	3957.00	44.50
77	0.00	0.00	0.00	0.00	27.15	27.15	3929.85	44.42
76	0.00	0.00	0.00	0.00	27.15	27.15	3902.70	44.33
75	0.00	0.00	0.00	0.00	27.15	27.15	3875.55	44.25
74	0.00	0.00	0.00	0.00	27.15	27.15	3848.40	44.17
73	0.00	0.00	0.00	0.00	27.15	27.15	3821.25	44.08
72	0.04	0.00	0.98	0.00	26.86	27.84	3794.10	44.00
71	0.12	0.01	2.79	0.02	26.31	29.11	3766.26	43.92
70	0.16	0.03	3.95	0.05	25.95	29.95	3737.15	43.83
69	0.21	0.05	5.01	0.10	25.62	30.72	3707.20	43.75
68	0.27	0.07	6.44	0.14	25.18	31.75	3676.47	43.67
67	0.45	0.09	10.87	0.18	23.84	34.88	3644.72	43.58
66	0.67	0.11	15.97	0.23	22.29	38.48	3609.84	43.50
65	0.80	0.14	19.18	0.28	21.31	40.77	3571.36	43.42
64	0.91	0.17	21.80	0.34	20.51	42.64	3530.58	43.33
63	1.00	0.19	24.07	0.38	19.81	44.27	3487.94	43.25
62	1.09	0.22	26.10	0.43	19.19	45.72	3443.68	43.17
61	1.16	0.24	27.92	0.48	18.63	47.03	3397.96	43.08
60	1.23	0.27	29.62	0.54	18.10	48.26	3350.92	43.00
59	1.30	0.30	31.19	0.60	17.61	49.40	3302.66	42.92
58	1.36	0.32	32.66	0.65	17.16	50.47	3253.26	42.83
57	1.42	0.35	34.05	0.70	16.73	51.47	3202.79	42.75
56	1.47	0.37	35.36	0.74	16.32	52.42	3151.32	42.67
55	1.53	0.39	36.60	0.79	15.93	53.32	3098.90	42.58
54	1.57	0.42	37.79	0.83	15.56	54.19	3045.58	42.50
53	1.62	0.44	38.91	0.88	15.21	55.01	2991.39	42.42
52	1.67	0.46	39.99	0.93	14.88	55.79	2936.39	42.33
51	1.71	0.48	41.02	0.97	14.55	56.54	2880.60	42.25
50	1.75	0.50	42.00	1.01	14.25	57.26	2824.05	42.17
49	1.79	0.53	42.94	1.05	13.95	57.95	2766.80	42.08
48	1.83	0.55	43.85	1.09	13.67	58.61	2708.85	42.00
47	1.86	0.56	44.72	1.13	13.39	59.25	2650.24	41.92
46	1.90	0.58	45.56	1.17	13.13	59.86	2590.99	41.83
45	1.93	0.60	46.36	1.20	12.88	60.45	2531.14	41.75
44	1.96	0.62	47.14	1.24	12.64	61.01	2470.69	41.67
43	2.00	0.64	47.88	1.28	12.40	61.56	2409.67	41.58
42	2.03	0.66	48.60	1.31	12.18	62.09	2348.11	41.50
41	2.05	0.67	49.29	1.35	11.96	62.60	2286.03	41.42
40	2.08	0.69	49.96	1.38	11.75	63.09	2223.43	41.33
39	2.11	0.71	50.59	1.41	11.55	63.56	2160.34	41.25
38	2.13	0.72	51.21	1.45	11.35	64.01	2096.79	41.17
37	2.16	0.74	51.81	1.48	11.16	64.45	2032.78	41.08
36	2.18	0.76	52.38	1.51	10.98	64.88	1968.32	41.00
35	2.21	0.77	52.93	1.54	10.81	65.28	1903.45	40.92
34	2.23	0.79	53.46	1.57	10.64	65.68	1838.17	40.83
33	2.25	0.80	53.97	1.60	10.48	66.05	1772.49	40.75
32	2.27	0.82	54.46	1.64	10.32	66.42	1706.44	40.67
31	2.29	0.84	54.94	1.68	10.16	66.78	1640.01	40.58
30	2.31	0.85	55.39	1.69	10.03	67.11	1573.23	40.50
29	2.33	0.86	55.82	1.72	9.89	67.43	1506.12	40.42
28	2.34	0.87	56.24	1.74	9.76	67.74	1438.70	40.33
27	2.36	0.89	56.64	1.77	9.63	68.04	1370.96	40.25
26	2.38	0.90	57.02	1.80	9.51	68.32	1302.92	40.17
25	2.39	0.91	57.38	1.82	9.39	68.59	1234.60	40.08
24	2.41	0.92	57.73	1.84	9.28	68.85	1166.01	40.00
23	2.42	0.93	58.06	1.87	9.17	69.10	1097.15	39.92
22	2.43	0.95	58.38	1.89	9.07	69.34	1028.05	39.83
21	2.44	0.96	58.68	1.91	8.97	69.56	958.72	39.75
20	2.46	0.97	58.96	1.93	8.88	69.78	889.15	39.67
19	2.47	0.98	59.23	1.96	8.80	69.98	819.38	39.58

1706.44	40.67	1521.49	40.67	3227.93	
1640.01	40.58	1484.07	40.58	3124.09	
1573.23	40.50	1446.33	40.50	3019.56	40.5
1506.12	40.42	1408.27	40.42	2914.39	
1438.70	40.33	1369.90	40.33	2808.59	
1370.96	40.25	1331.23	40.25	2702.19	
1302.92	40.17	1292.28	40.17	2595.20	
1234.60	40.08	1253.06	40.08	2487.66	
1166.01	40.00	1213.57	40.00	2379.57	40
1097.15	39.92	1173.82	39.92	2270.97	
1028.05	39.83	1133.82	39.83	2161.88	
958.72	39.75	1093.59	39.75	2052.31	
889.15	39.67	1053.13	39.67	1942.28	
819.38	39.58	1012.44	39.58	1831.82	
749.40	39.50	971.53	39.50	1720.93	39.5
679.23	39.42	930.43	39.42	1609.66	
608.88	39.33	889.13	39.33	1498.02	
538.36	39.25	847.65	39.25	1386.01	
467.68	39.17	805.98	39.17	1273.66	
396.85	39.08	764.14	39.08	1160.99	
325.80	39.00	722.14	39.00	1047.94	39
298.65	38.92	679.97	38.92	978.62	
271.50	38.83	637.66	38.83	909.16	
244.35	38.75	595.19	38.75	839.54	
217.20	38.67	552.60	38.67	769.80	
190.05	38.58	509.87	38.58	699.92	
162.90	38.50	467.01	38.50	629.91	38.5
135.75	38.42	424.04	38.42	559.79	
108.60	38.33	380.96	38.33	489.56	
81.45	38.25	337.77	38.25	419.22	
54.30	38.17	294.49	38.17	348.79	
27.15	38.08	251.11	38.08	278.26	
		207.60	38.00	207.60	38
		190.30	37.92	190.30	
		173.00	37.83	173.00	
		155.70	37.75	155.70	
		138.40	37.67	138.40	
		121.10	37.58	121.10	
		103.80	37.50	103.80	37.5
		86.50	37.42	86.50	
		69.20	37.33	69.20	
		51.90	37.25	51.90	
		34.60	37.17	34.60	
		17.30	37.08	17.30	

tank 3	tank 2		tank 1		cumulative	
	4149.90		2600.96		6750.86	45.5
	4144.90		2597.96		6742.86	
	4139.90		2594.96		6734.86	
	4134.90		2591.96		6726.86	
	4129.90		2588.96		6718.86	
	4124.90		2585.96		6710.86	
	4119.90	45.00	2582.96		6702.86	45
	4092.75	44.92	2579.96		6672.71	
	4065.60	44.83	2576.96		6642.56	
	4038.45	44.75	2573.96		6612.41	
	4011.30	44.67	2570.96		6582.26	
	3984.15	44.58	2567.96		6552.11	
	3957.00	44.50	2564.96		6521.96	44.5
	3929.85	44.42	2561.96		6491.81	
	3902.70	44.33	2558.96		6461.66	
	3875.55	44.25	2555.96		6431.51	
	3848.40	44.17	2552.96		6401.36	
	3821.25	44.08	2549.96		6371.21	
	3794.10	44.00	2546.96	44.00	6341.06	44
	3766.26	43.92	2529.66	43.92	6295.92	
	3737.15	43.83	2512.36	43.83	6249.51	
	3707.20	43.75	2495.06	43.75	6202.25	
	3676.47	43.67	2477.76	43.67	6154.23	
	3644.72	43.58	2460.46	43.58	6105.18	
	3609.84	43.50	2443.16	43.50	6053.00	43.5
	3571.36	43.42	2425.86	43.42	5997.21	
	3530.58	43.33	2408.56	43.33	5939.14	
	3487.94	43.25	2391.26	43.25	5879.20	
	3443.68	43.17	2373.96	43.17	5817.63	
	3397.96	43.08	2356.66	43.08	5754.61	
	3350.92	43.00	2339.36	43.00	5690.28	43
	3302.66	42.92	2321.66	42.92	5624.32	
	3253.26	42.83	2303.20	42.83	5556.47	
	3202.79	42.75	2284.25	42.75	5487.05	
	3151.32	42.67	2264.84	42.67	5416.16	
	3098.90	42.58	2244.82	42.58	5343.72	
	3045.58	42.50	2222.96	42.50	5268.53	42.5
	2991.39	42.42	2198.98	42.42	5190.37	
	2936.39	42.33	2173.65	42.33	5110.03	
	2880.60	42.25	2147.22	42.25	5027.81	
	2824.05	42.17	2119.82	42.17	4943.87	
	2766.80	42.08	2091.56	42.08	4858.36	
	2708.85	42.00	2062.52	42.00	4771.37	42
	2650.24	41.92	2032.75	41.92	4682.99	
	2590.99	41.83	2002.30	41.83	4593.29	
	2531.14	41.75	1971.21	41.75	4502.34	
	2470.69	41.67	1939.51	41.67	4410.20	
	2409.67	41.58	1907.26	41.58	4316.93	
	2348.11	41.50	1874.46	41.50	4222.57	41.5
	2286.03	41.42	1841.14	41.42	4127.17	
	2223.43	41.33	1807.34	41.33	4030.77	
	2160.34	41.25	1773.06	41.25	3933.40	
	2096.79	41.17	1738.33	41.17	3835.12	
	2032.78	41.08	1703.18	41.08	3735.95	
	1968.32	41.00	1667.61	41.00	3635.93	41
	1903.45	40.92	1631.64	40.92	3535.09	
	1838.17	40.83	1595.28	40.83	3433.45	
	1772.49	40.75	1558.56	40.75	3331.05	

VOLUME CALCULATIONS

ACTUAL ELEV.	DEPTH (FT)	VOLUME (AC-FT)	Q (CFS)
39	0	0.025	0.01
40	0.75	0.055	1.30
40.5	1.25	0.070	1.99
41	1.75	0.084	2.49
41.5	2.25	0.098	2.91
42	2.75	0.111	3.28
42.5	3.25	0.122	3.61
43	3.75	0.131	3.91
43.5	4.25	0.140	4.19
44	4.75	0.147	4.45
44.5	5.25	0.152	4.70
45	5.75	0.155	4.93
45.5	6.25	0.156	5.16
46	6.75	0.165	5.37

<u>Orifice Equation</u>

Q = CA SQRT(2gH)

C =	0.6
Diameter (in)	9
Area (ft^2)=	0.44178647
g =	32.2
H (Ft) =	Depth of water above center of orifice
Q (CFS)=	Flow

APPENDIX C

TANK VOLUMES/STAGE STORAGE/AHYMO

FUTURE

ult.


```
*S      AHYMO - safcu
*S              POND ROUTING

START                 TIME=0.0  PUNCH CODE=0


RAINFALL              TYPE=1
                      QUARTER=0.0    ONE= 2.20 IN
                      SIX= 2.90 IN   DAY= 3.70 IN   DT = 0.05 HR


COMPUTE NM HYD        ID=1  HYD NO=101  DA= .00468 SQ MI
                      PER A=00  PER B=12  PER C=6  PER D=82
                      TP=-.139 MASSRAIN=-1


PRINT HYD             ID=1  CODE=20


* ROUTE THE TOTAL FLOW THROUGH THE PROPOSED RESERVOIR
ROUTE RESERVOIR       ID=2   HYD NO=102   INFLOW=1   CODE=3
                      OUTFLOW(CFS)    STORAGE(AC-FT)    ELEV(FT)
                             0.00            0.03          39.00
                             1.30            0.08          40.00
                             1.99            0.11          40.50
                             2.49            0.14          41.00
                             2.91            0.16          41.50
                             3.28            0.19          42.00
                             3.61            0.21          42.50
                             3.91            0.23          43.00
                             4.19            0.25          43.50
                             4.45            0.26          44.00
                             4.70            0.27          44.50

                             4.93            0.28          45.00
                             5.16            0.29          45.50
                             5.37            0.31          46.00
PRINT HYD             ID=2   CODE=20


FINISH
```

```
        AHYMO PROGRAM (AHYMO-S4)                        - Version: S4.01a - Rel: 01a
             RUN DATE (MON/DAY/YR) = 06/17/2015
             START TIME (HR:MIN:SEC) = 18:15:31     USER NO.=
RioGrandeSingleA41963517
             INPUT FILE = ts and
Settings\Owner\Desktop\2014jobs\1498-11301MONTGOMERY\PONROUTING061615.txt

    *S     AHYMO - safcu
    *S             POND ROUTING

    START                TIME=0.0  PUNCH CODE=0

    RAINFALL             TYPE=1
                         QUARTER=0.0    ONE= 2.20 IN
                         SIX= 2.90 IN   DAY= 3.70 IN   DT = 0.05 HR


                    6-HOUR RAINFALL DIST. - BASED ON NOAA ATLAS 14 FOR CONVECTIVE
AREAS (NM & AZ) - D1
                    DT =   0.050000 HOURS       END TIME =     6.000000 HOURS
                      0.0000  0.0047  0.0095  0.0146  0.0201  0.0259  0.0323
                      0.0415  0.0561  0.0718  0.0881  0.1056  0.1235  0.1418
                      0.1608  0.1800  0.2012  0.2234  0.2472  0.2763  0.3081
                      0.3508  0.3991  0.4587  0.5383  0.6279  0.7825  1.0229
                      1.4348  1.7243  1.9526  2.0673  2.1679  2.2402  2.2976
                      2.3477  2.3844  2.4181  2.4459  2.4701  2.4926  2.5127
                      2.5318  2.5487  2.5648  2.5804  2.5955  2.6079  2.6148
                      2.6216  2.6284  2.6346  2.6409  2.6469  2.6529  2.6588
                      2.6644  2.6699  2.6753  2.6806  2.6859  2.6909  2.6958
                      2.7007  2.7055  2.7103  2.7148  2.7194  2.7238  2.7282
                      2.7325  2.7368  2.7410  2.7452  2.7493  2.7534  2.7574
                      2.7614  2.7654  2.7692  2.7731  2.7769  2.7807  2.7844
                      2.7881  2.7917  2.7953  2.7989  2.8024  2.8059  2.8094
                      2.8128  2.8162  2.8196  2.8229  2.8262  2.8295  2.8327
                      2.8359  2.8391  2.8422  2.8453  2.8484  2.8515  2.8546
                      2.8576  2.8606  2.8635  2.8665  2.8694  2.8723  2.8751
                      2.8780  2.8808  2.8836  2.8864  2.8892  2.8919  2.8946
                      2.8973  2.9000

    COMPUTE NM HYD       ID=1  HYD NO=101  DA= .00468 SQ MI
                         PER A=00  PER B=12  PER C=6  PER D=82
                         TP=-.139 MASSRAIN=-1


             K =  0.075755HR    TP =  0.139000HR    K/TP RATIO =  0.545000     SHAPE
CONSTANT, N =  7.106428
             UNIT PEAK =   14.530    CFS   UNIT VOLUME =   0.9978       B =   526.28
 P60 = 2.2000
             AREA =     0.003838 SQ MI    IA =   0.10000 INCHES    INF =   0.04000
INCHES PER HOUR
             RUNOFF COMPUTED BY INITIAL ABSTRACTION/INFILTRATION NUMBER METHOD - DT =
0.050000


             K =  0.131509HR    TP =  0.139000HR    K/TP RATIO =  0.946108     SHAPE
CONSTANT, N =  3.736321
```

UNIT PEAK = 2.0435 CFS UNIT VOLUME = 0.9950 B = 337.19
P60 = 2.2000
AREA = 0.000842 SQ MI IA = 0.45000 INCHES INF = 1.11000
INCHES PER HOUR
RUNOFF COMPUTED BY INITIAL ABSTRACTION/INFILTRATION NUMBER METHOD - DT =
0.050000

PRINT HYD ID=1 CODE=20

PARTIAL HYDROGRAPH 101.00

TIME HRS	FLOW CFS	TIME HRS	FLOW CFS	TIME HRS	FLOW CFS
0.000	0.0	2.000	2.2	4.000	0.1
6.000	0.1				
1.000	1.0	3.000	0.2	5.000	0.1

RUNOFF VOLUME = 2.38959 INCHES = 0.5964 ACRE-FEET
PEAK DISCHARGE RATE = 14.45 CFS AT 1.500 HOURS BASIN AREA =
0.0047 SQ. MI.

* ROUTE THE TOTAL FLOW THROUGH THE PROPOSED RESERVOIR
ROUTE RESERVOIR ID=2 HYD NO=102 INFLOW=1 CODE=3

OUTFLOW(CFS)	STORAGE(AC-FT)	ELEV(FT)
0.00	0.03	39.00
1.30	0.08	40.00
1.99	0.11	40.50
2.49	0.14	41.00
2.91	0.16	41.50
3.28	0.19	42.00
3.61	0.21	42.50
3.91	0.23	43.00
4.19	0.25	43.50
4.45	0.26	44.00
4.70	0.27	44.50
4.93	0.28	45.00
5.16	0.29	45.50
5.37	0.31	46.00

* * * * * * * * * * * * * * * * *

TIME (HRS)	INFLOW (CFS)	ELEV (FEET)	VOLUME (AC-FT)	OUTFLOW (CFS)
0.00	0.00	39.00	0.030	0.00
0.15	0.00	39.00	0.030	0.00
0.30	0.00	39.00	0.030	0.00
0.45	0.00	39.00	0.030	0.00
0.60	0.08	39.00	0.030	0.00
0.75	0.61	39.08	0.034	0.11
0.90	0.83	39.21	0.041	0.28
1.05	1.18	39.36	0.048	0.47
1.20	2.10	39.61	0.060	0.79
1.35	4.92	40.11	0.087	1.45
1.50	14.45	41.84	0.180	3.16
1.65	9.14	45.23	0.285	5.03

1.80	4.52	45.76	0.300	5.27
1.95	2.62	44.97	0.279	4.92
2.10	1.69	43.48	0.249	4.18
2.25	1.18	42.69	0.218	3.72
2.40	0.87	41.95	0.187	3.24
2.55	0.48	41.43	0.157	2.85
2.70	0.34	40.84	0.130	2.33
2.85	0.26	40.46	0.108	1.94
3.00	0.21	40.15	0.089	1.51
3.15	0.17	39.90	0.075	1.17
3.30	0.16	39.69	0.064	0.89
3.45	0.14	39.53	0.056	0.69
3.60	0.14	39.41	0.051	0.54
3.75	0.13	39.33	0.046	0.43
3.90	0.13	39.27	0.043	0.34
4.05	0.13	39.22	0.041	0.29
4.20	0.13	39.19	0.039	0.24
4.35	0.12	39.16	0.038	0.21
4.50	0.12	39.14	0.037	0.19
4.65	0.12	39.13	0.037	0.17
4.80	0.12	39.12	0.036	0.16
4.95	0.12	39.11	0.036	0.15
5.10	0.12	39.11	0.035	0.14
5.25	0.13	39.11	0.035	0.14
5.40	0.13	39.10	0.035	0.13
5.55	0.13	39.10	0.035	0.13
5.70	0.13	39.10	0.035	0.13
5.85	0.13	39.10	0.035	0.13
6.00	0.13	39.10	0.035	0.13
6.15	0.06	39.10	0.035	0.12
6.30	0.02	39.08	0.034	0.10
6.45	0.01	39.06	0.033	0.08
6.60	0.00	39.04	0.032	0.06
6.75	0.00	39.03	0.032	0.04
6.90	0.00	39.02	0.031	0.03
7.05	0.00	39.02	0.031	0.02
7.20	0.00	39.01	0.031	0.02
7.35	0.00	39.01	0.030	0.01
7.50	0.00	39.01	0.030	0.01
7.65	0.00	39.00	0.030	0.01
7.80	0.00	39.00	0.030	0.00

PEAK DISCHARGE = 5.278 CFS - PEAK OCCURS AT HOUR 1.75
MAXIMUM WATER SURFACE ELEVATION = 45.781
MAXIMUM STORAGE = 0.3013 AC-FT INCREMENTAL TIME= 0.050000HRS

PRINT HYD ID=2 CODE=20

PARTIAL HYDROGRAPH 102.00

TIME HRS	FLOW CFS	TIME HRS	FLOW CFS	TIME HRS	FLOW CFS
0.000	0.0	2.000	4.7	4.000	0.3
6.000	0.1	8.000	0.0		
1.000	0.4	3.000	1.5	5.000	0.1
7.000	0.0				

RUNOFF VOLUME = 2.38953 INCHES = 0.5964 ACRE-FEET
PEAK DISCHARGE RATE = 5.28 CFS AT 1.750 HOURS BASIN AREA = 0.0047 SQ. MI.

```
FINISH
    NORMAL PROGRAM FINISH          END TIME (HR:MIN:SEC) = 18:15:31
```

Tank3

Project:

StormTech
Detention • Retention • Water Quality
A division of ADS

Chamber Model -	MC-4500	
Units -	Imperial	Click Here for Metric
Number of Chambers -	24	
Number of End Caps -	2	
Voids in the stone (porosity) -	30	%
Base of Stone Elevation -	38.00	ft
Amount of Stone Above Chambers -	12	in
Amount of Stone Below Chambers -	12	in
Area of system -	1086	sf Min. Area - 942 sf min. area

☑ Include Perimeter Stone in Calculations

Height of System (inches)	Incremental Single Chamber (cubic feet)	Incremental Single End Cap (cubic feet)	Incremental Chambers (cubic feet)	Incremental End Cap (cubic feet)	Incremental Stone (cubic feet)	Incremental Ch, EC and Stone (cubic feet)	Cumulative System (cubic feet)	Elevation (feet)
84	0.00	0.00	0.00	0.00	27.15	27.15	4119.90	45.00
83	0.00	0.00	0.00	0.00	27.15	27.15	4092.75	44.92
82	0.00	0.00	0.00	0.00	27.15	27.15	4065.60	44.83
81	0.00	0.00	0.00	0.00	27.15	27.15	4038.45	44.75
80	0.00	0.00	0.00	0.00	27.15	27.15	4011.30	44.67
79	0.00	0.00	0.00	0.00	27.15	27.15	3984.15	44.58
78	0.00	0.00	0.00	0.00	27.15	27.15	3957.00	44.50
77	0.00	0.00	0.00	0.00	27.15	27.15	3929.85	44.42
76	0.00	0.00	0.00	0.00	27.15	27.15	3902.70	44.33
75	0.00	0.00	0.00	0.00	27.15	27.15	3875.55	44.25
74	0.00	0.00	0.00	0.00	27.15	27.15	3848.40	44.17
73	0.00	0.00	0.00	0.00	27.15	27.15	3821.25	44.08
72	0.04	0.00	0.98	0.00	26.86	27.84	3794.10	44.00
71	0.12	0.01	2.79	0.02	26.31	29.11	3766.26	43.92
70	0.16	0.03	3.95	0.05	25.95	29.95	3737.15	43.83
69	0.21	0.05	5.01	0.10	25.62	30.72	3707.20	43.75
68	0.27	0.07	6.44	0.14	25.18	31.75	3676.47	43.67
67	0.45	0.09	10.87	0.18	23.84	34.88	3644.72	43.58
66	0.67	0.11	15.97	0.23	22.29	38.48	3609.84	43.50
65	0.80	0.14	19.18	0.28	21.31	40.77	3571.36	43.42
64	0.91	0.17	21.80	0.34	20.51	42.64	3530.58	43.33
63	1.00	0.19	24.07	0.38	19.81	44.27	3487.94	43.25
62	1.09	0.22	26.10	0.43	19.19	45.72	3443.68	43.17
61	1.16	0.24	27.92	0.48	18.63	47.03	3397.96	43.08
60	1.23	0.27	29.62	0.54	18.10	48.26	3350.92	43.00
59	1.30	0.30	31.19	0.60	17.61	49.40	3302.66	42.92
58	1.36	0.32	32.66	0.65	17.16	50.47	3253.26	42.83
57	1.42	0.35	34.05	0.70	16.73	51.47	3202.79	42.75
56	1.47	0.37	35.36	0.74	16.32	52.42	3151.32	42.67
55	1.53	0.39	36.60	0.79	15.93	53.32	3098.90	42.58
54	1.57	0.42	37.79	0.83	15.56	54.19	3045.58	42.50
53	1.62	0.44	38.91	0.88	15.21	55.01	2991.39	42.42
52	1.67	0.46	39.99	0.93	14.88	55.79	2936.39	42.33
51	1.71	0.48	41.02	0.97	14.55	56.54	2880.60	42.25
50	1.75	0.50	42.00	1.01	14.25	57.26	2824.05	42.17
49	1.79	0.53	42.94	1.05	13.95	57.95	2766.80	42.08
48	1.83	0.55	43.85	1.09	13.67	58.61	2708.85	42.00
47	1.86	0.56	44.72	1.13	13.39	59.25	2650.24	41.92
46	1.90	0.58	45.56	1.17	13.13	59.86	2590.99	41.83
45	1.93	0.60	46.36	1.20	12.88	60.45	2531.14	41.75
44	1.96	0.62	47.14	1.24	12.64	61.01	2470.69	41.67
43	2.00	0.64	47.88	1.28	12.40	61.56	2409.67	41.58
42	2.03	0.66	48.60	1.31	12.18	62.09	2348.11	41.50
41	2.05	0.67	49.29	1.35	11.96	62.60	2286.03	41.42
40	2.08	0.69	49.96	1.38	11.75	63.09	2223.43	41.33
39	2.11	0.71	50.59	1.41	11.55	63.56	2160.34	41.25
38	2.13	0.72	51.21	1.45	11.35	64.01	2096.79	41.17
37	2.16	0.74	51.81	1.48	11.16	64.45	2032.78	41.08
36	2.18	0.76	52.38	1.51	10.98	64.88	1968.32	41.00
35	2.21	0.77	52.93	1.54	10.81	65.28	1903.45	40.92
34	2.23	0.79	53.46	1.57	10.64	65.68	1838.17	40.83
33	2.25	0.80	53.97	1.60	10.48	66.05	1772.49	40.75
32	2.27	0.82	54.46	1.64	10.32	66.42	1706.44	40.67
31	2.29	0.84	54.94	1.68	10.16	66.78	1640.01	40.58
30	2.31	0.85	55.39	1.69	10.03	67.11	1573.23	40.50
29	2.33	0.86	55.82	1.72	9.89	67.43	1506.12	40.42
28	2.34	0.87	56.24	1.74	9.76	67.74	1438.70	40.33
27	2.36	0.89	56.64	1.77	9.63	68.04	1370.96	40.25
26	2.38	0.90	57.02	1.80	9.51	68.32	1302.92	40.17
25	2.39	0.91	57.38	1.82	9.39	68.59	1234.60	40.08
24	2.41	0.92	57.73	1.84	9.28	68.85	1166.01	40.00
23	2.42	0.93	58.06	1.87	9.17	69.10	1097.15	39.92
22	2.43	0.95	58.38	1.89	9.07	69.34	1028.05	39.83
21	2.44	0.96	58.68	1.91	8.97	69.56	958.72	39.75
20	2.46	0.97	58.96	1.93	8.88	69.78	889.15	39.67
19	2.47	0.98	59.23	1.96	8.80	69.98	819.38	39.58

Tank 2

Project:

StormTech
Detention • Retention • Water Quality
A division of ADS

Chamber Model -	MC-4500	
Units -	Imperial	Click Here for Metric
Number of Chambers -	34	
Number of End Caps -	2	
Voids in the stone (porosity) -	30	%
Base of Stone Elevation -	38.50	ft
Amount of Stone Above Chambers -	12	in
Amount of Stone Below Chambers -	12	in
Area of system -	1500	sf Min. Area - 1308 sf min. area

☑ Include Perimeter Stone in Calculations

Height of System (inches)	Incremental Single Chamber (cubic feet)	Incremental Single End Cap (cubic feet)	Incremental Chambers (cubic feet)	Incremental End Cap (cubic feet)	Incremental Stone (cubic feet)	Incremental Ch, EC and Stone (cubic feet)	Cumulative System (cubic feet)	Elevation (feet)
84	0.00	0.00	0.00	0.00	37.50	37.50	5734.85	45.50
83	0.00	0.00	0.00	0.00	37.50	37.50	5697.35	45.42
82	0.00	0.00	0.00	0.00	37.50	37.50	5659.85	45.33
81	0.00	0.00	0.00	0.00	37.50	37.50	5622.35	45.25
80	0.00	0.00	0.00	0.00	37.50	37.50	5584.85	45.17
79	0.00	0.00	0.00	0.00	37.50	37.50	5547.35	45.08
78	0.00	0.00	0.00	0.00	37.50	37.50	5509.85	45.00
77	0.00	0.00	0.00	0.00	37.50	37.50	5472.35	44.92
76	0.00	0.00	0.00	0.00	37.50	37.50	5434.85	44.83
75	0.00	0.00	0.00	0.00	37.50	37.50	5397.35	44.75
74	0.00	0.00	0.00	0.00	37.50	37.50	5359.85	44.67
73	0.00	0.00	0.00	0.00	37.50	37.50	5322.35	44.58
72	0.04	0.00	1.39	0.00	37.08	38.48	5284.85	44.50
71	0.12	0.01	3.95	0.02	36.31	40.28	5246.37	44.42
70	0.16	0.03	5.60	0.05	35.80	41.46	5206.10	44.33
69	0.21	0.05	7.10	0.10	35.34	42.53	5164.64	44.25
68	0.27	0.07	9.12	0.14	34.72	43.98	5122.11	44.17
67	0.45	0.09	15.39	0.18	32.83	48.40	5078.12	44.08
66	0.67	0.11	22.62	0.23	30.65	53.49	5029.72	44.00
65	0.80	0.14	27.17	0.28	29.27	56.71	4976.23	43.92
64	0.91	0.17	30.88	0.34	28.14	59.35	4919.52	43.83
63	1.00	0.19	34.10	0.38	27.16	61.64	4860.17	43.75
62	1.09	0.22	36.97	0.43	26.28	63.68	4798.53	43.67
61	1.16	0.24	39.56	0.48	25.49	65.53	4734.85	43.58
60	1.23	0.27	41.96	0.54	24.75	67.25	4669.32	43.50
59	1.30	0.30	44.19	0.60	24.06	68.85	4602.08	43.42
58	1.36	0.32	46.27	0.65	23.42	70.35	4533.23	43.33
57	1.42	0.35	48.24	0.70	22.82	71.75	4462.88	43.25
56	1.47	0.37	50.09	0.74	22.25	73.08	4391.13	43.17
55	1.53	0.39	51.86	0.79	21.71	74.35	4318.05	43.08
54	1.57	0.42	53.53	0.83	21.19	75.56	4243.70	43.00
53	1.62	0.44	55.13	0.88	20.70	76.71	4168.14	42.92
52	1.67	0.46	56.65	0.93	20.23	77.80	4091.43	42.83
51	1.71	0.48	58.11	0.97	19.78	78.85	4013.63	42.75
50	1.75	0.50	59.50	1.01	19.35	79.86	3934.77	42.67
49	1.79	0.53	60.84	1.05	18.93	80.82	3854.92	42.58
48	1.83	0.55	62.12	1.09	18.54	81.75	3774.09	42.50
47	1.86	0.56	63.36	1.13	18.15	82.64	3692.34	42.42
46	1.90	0.58	64.54	1.17	17.79	83.50	3609.70	42.33
45	1.93	0.60	65.68	1.20	17.43	84.32	3526.21	42.25
44	1.96	0.62	66.78	1.24	17.09	85.11	3441.89	42.17
43	2.00	0.64	67.83	1.28	16.77	85.88	3356.77	42.08
42	2.03	0.66	68.85	1.31	16.45	86.61	3270.90	42.00
41	2.05	0.67	69.83	1.35	16.15	87.32	3184.28	41.92
40	2.08	0.69	70.77	1.38	15.85	88.01	3096.96	41.83
39	2.11	0.71	71.67	1.41	15.57	88.66	3008.96	41.75
38	2.13	0.72	72.55	1.45	15.30	89.30	2920.29	41.67
37	2.16	0.74	73.40	1.48	15.04	89.91	2830.99	41.58
36	2.18	0.76	74.21	1.51	14.78	90.50	2741.08	41.50
35	2.21	0.77	74.99	1.54	14.54	91.07	2650.58	41.42
34	2.23	0.79	75.74	1.57	14.31	91.62	2559.51	41.33
33	2.25	0.80	76.46	1.60	14.08	92.15	2467.89	41.25
32	2.27	0.82	77.16	1.64	13.86	92.66	2375.74	41.17
31	2.29	0.84	77.83	1.68	13.65	93.15	2283.08	41.08
30	2.31	0.85	78.47	1.69	13.45	93.61	2189.93	41.00
29	2.33	0.86	79.08	1.72	13.26	94.06	2096.32	40.92
28	2.34	0.87	79.67	1.74	13.08	94.49	2002.26	40.83
27	2.36	0.89	80.24	1.77	12.90	94.90	1907.77	40.75
26	2.38	0.90	80.78	1.80	12.73	95.30	1812.86	40.67
25	2.39	0.91	81.29	1.82	12.57	95.68	1717.56	40.58
24	2.41	0.92	81.79	1.84	12.41	96.04	1621.88	40.50
23	2.42	0.93	82.25	1.87	12.26	96.39	1525.84	40.42
22	2.43	0.95	82.70	1.89	12.12	96.71	1429.45	40.33
21	2.44	0.96	83.12	1.91	11.99	97.03	1332.74	40.25
20	2.46	0.97	83.53	1.93	11.86	97.32	1235.71	40.17
19	2.47	0.98	83.90	1.96	11.74	97.60	1138.39	40.08

Tank 1

Project:

StormTech
Detention • Retention • Water Quality
A division of ADS

Chamber Model -	MC-4500	
Units -	Imperial	Click Here for Metric
Number of Chambers -	14	
Number of End Caps -	2	
Voids in the stone (porosity) -	30	%
Base of Stone Elevation -	37.00	ft
Amount of Stone Above Chambers -	12	in
Amount of Stone Below Chambers -	12	in
Area of system -	692	sf Min. Area - 576 sf min. area

☑ Include Perimeter Stone in Calculations

Height of System (inches)	Incremental Single Chamber (cubic feet)	Incremental Single End Cap (cubic feet)	Incremental Chambers (cubic feet)	Incremental End Cap (cubic feet)	Incremental Stone (cubic feet)	Incremental Ch, EC and Stone (cubic feet)	Cumulative System (cubic feet)	Elevation (feet)
84	0.00	0.00	0.00	0.00	17.30	17.30	2546.96	44.00
83	0.00	0.00	0.00	0.00	17.30	17.30	2529.66	43.92
82	0.00	0.00	0.00	0.00	17.30	17.30	2512.36	43.83
81	0.00	0.00	0.00	0.00	17.30	17.30	2495.06	43.75
80	0.00	0.00	0.00	0.00	17.30	17.30	2477.76	43.67
79	0.00	0.00	0.00	0.00	17.30	17.30	2460.46	43.58
78	0.00	0.00	0.00	0.00	17.30	17.30	2443.16	43.50
77	0.00	0.00	0.00	0.00	17.30	17.30	2425.86	43.42
76	0.00	0.00	0.00	0.00	17.30	17.30	2408.56	43.33
75	0.00	0.00	0.00	0.00	17.30	17.30	2391.26	43.25
74	0.00	0.00	0.00	0.00	17.30	17.30	2373.96	43.17
73	0.00	0.00	0.00	0.00	17.30	17.30	2356.66	43.08
72	0.04	0.00	0.57	0.00	17.13	17.70	2339.36	43.00
71	0.12	0.01	1.63	0.02	16.81	18.45	2321.66	42.92
70	0.16	0.03	2.31	0.05	16.59	18.95	2303.20	42.83
69	0.21	0.05	2.92	0.10	16.39	19.41	2284.25	42.75
68	0.27	0.07	3.76	0.14	16.13	20.02	2264.84	42.67
67	0.45	0.09	6.34	0.18	15.35	21.86	2244.82	42.58
66	0.67	0.11	9.31	0.23	14.44	23.98	2222.96	42.50
65	0.80	0.14	11.19	0.28	13.86	25.33	2198.98	42.42
64	0.91	0.17	12.71	0.34	13.39	26.43	2173.65	42.33
63	1.00	0.19	14.04	0.38	12.97	27.40	2147.22	42.25
62	1.09	0.22	15.22	0.43	12.60	28.26	2119.82	42.17
61	1.16	0.24	16.29	0.48	12.27	29.04	2091.56	42.08
60	1.23	0.27	17.28	0.54	11.96	29.77	2062.52	42.00
59	1.30	0.30	18.20	0.60	11.66	30.45	2032.75	41.92
58	1.36	0.32	19.05	0.65	11.39	31.09	2002.30	41.83
57	1.42	0.35	19.86	0.70	11.13	31.69	1971.21	41.75
56	1.47	0.37	20.63	0.74	10.89	32.26	1939.51	41.67
55	1.53	0.39	21.35	0.79	10.66	32.80	1907.26	41.58
54	1.57	0.42	22.04	0.83	10.44	33.31	1874.46	41.50
53	1.62	0.44	22.70	0.88	10.23	33.81	1841.14	41.42
52	1.67	0.46	23.33	0.93	10.02	34.28	1807.34	41.33
51	1.71	0.48	23.93	0.97	9.83	34.73	1773.06	41.25
50	1.75	0.50	24.50	1.01	9.65	35.16	1738.33	41.17
49	1.79	0.53	25.05	1.05	9.47	35.57	1703.18	41.08
48	1.83	0.55	25.58	1.09	9.30	35.97	1667.61	41.00
47	1.86	0.56	26.09	1.13	9.13	36.35	1631.64	40.92
46	1.90	0.58	26.58	1.17	8.98	36.72	1595.28	40.83
45	1.93	0.60	27.05	1.20	8.83	37.07	1558.56	40.75
44	1.96	0.62	27.50	1.24	8.68	37.42	1521.49	40.67
43	2.00	0.64	27.93	1.28	8.54	37.75	1484.07	40.58
42	2.03	0.66	28.35	1.31	8.40	38.06	1446.33	40.50
41	2.05	0.67	28.75	1.35	8.27	38.37	1408.27	40.42
40	2.08	0.69	29.14	1.38	8.14	38.67	1369.90	40.33
39	2.11	0.71	29.51	1.41	8.02	38.95	1331.23	40.25
38	2.13	0.72	29.87	1.45	7.90	39.23	1292.28	40.17
37	2.16	0.74	30.22	1.48	7.79	39.49	1253.06	40.08
36	2.18	0.76	30.56	1.51	7.68	39.75	1213.57	40.00
35	2.21	0.77	30.88	1.54	7.57	39.99	1173.82	39.92
34	2.23	0.79	31.19	1.57	7.47	40.23	1133.82	39.83
33	2.25	0.80	31.48	1.60	7.37	40.46	1093.59	39.75
32	2.27	0.82	31.77	1.64	7.28	40.69	1053.13	39.67
31	2.29	0.84	32.05	1.68	7.18	40.91	1012.44	39.58
30	2.31	0.85	32.31	1.69	7.10	41.10	971.53	39.50
29	2.33	0.86	32.56	1.72	7.02	41.30	930.43	39.42
28	2.34	0.87	32.81	1.74	6.93	41.49	889.13	39.33
27	2.36	0.89	33.04	1.77	6.86	41.67	847.65	39.25
26	2.38	0.90	33.26	1.80	6.78	41.84	805.98	39.17
25	2.39	0.91	33.47	1.82	6.71	42.01	764.14	39.08
24	2.41	0.92	33.68	1.84	6.64	42.16	722.14	39.00
23	2.42	0.93	33.87	1.87	6.58	42.32	679.97	38.92
22	2.43	0.95	34.05	1.89	6.52	42.46	637.66	38.83
21	2.44	0.96	34.23	1.91	6.46	42.60	595.19	38.75
20	2.46	0.97	34.39	1.93	6.40	42.73	552.60	38.67
19	2.47	0.98	34.55	1.96	6.35	42.85	509.87	38.58

Summary volume

tank 3		tank 2		tank 1		cumulative	
5734.85	45.50	4149.90		2600.96		12485.71	45.5
5697.35	45.42	4144.90		2597.96		12440.21	
5659.85	45.33	4139.90		2594.96		12394.71	
5622.35	45.25	4134.90		2591.96		12349.21	
5584.85	45.17	4129.90		2588.96		12303.71	
5547.35	45.08	4124.90		2585.96		12258.21	
5509.85	45.00	4119.90	45.00	2582.96		12212.71	45
5472.35	44.92	4092.75	44.92	2579.96		12145.06	
5434.85	44.83	4065.60	44.83	2576.96		12077.41	
5397.35	44.75	4038.45	44.75	2573.96		12009.76	
5359.85	44.67	4011.30	44.67	2570.96		11942.11	
5322.35	44.58	3984.15	44.58	2567.96		11874.46	
5284.85	44.50	3957.00	44.50	2564.96		11806.81	44.5
5246.37	44.42	3929.85	44.42	2561.96		11738.18	
5206.10	44.33	3902.70	44.33	2558.96		11667.76	
5164.64	44.25	3875.55	44.25	2555.96		11596.15	
5122.11	44.17	3848.40	44.17	2552.96		11523.46	
5078.12	44.08	3821.25	44.08	2549.96		11449.33	
5029.72	44.00	3794.10	44.00	2546.96	44.00	11370.78	44
4976.23	43.92	3766.26	43.92	2529.66	43.92	11272.15	
4919.52	43.83	3737.15	43.83	2512.36	43.83	11169.03	
4860.17	43.75	3707.20	43.75	2495.06	43.75	11062.42	
4798.53	43.67	3676.47	43.67	2477.76	43.67	10952.76	
4734.85	43.58	3644.72	43.58	2460.46	43.58	10840.03	
4669.32	43.50	3609.84	43.50	2443.16	43.50	10722.32	43.5
4602.08	43.42	3571.36	43.42	2425.86	43.42	10599.29	
4533.23	43.33	3530.58	43.33	2408.56	43.33	10472.37	
4462.88	43.25	3487.94	43.25	2391.26	43.25	10342.08	
4391.13	43.17	3443.68	43.17	2373.96	43.17	10208.76	
4318.05	43.08	3397.96	43.08	2356.66	43.08	10072.66	
4243.70	43.00	3350.92	43.00	2339.36	43.00	9933.97	43
4168.14	42.92	3302.66	42.92	2321.66	42.92	9792.46	
4091.43	42.83	3253.26	42.83	2303.20	42.83	9647.90	
4013.63	42.75	3202.79	42.75	2284.25	42.75	9500.67	
3934.77	42.67	3151.32	42.67	2264.84	42.67	9350.94	
3854.92	42.58	3098.90	42.58	2244.82	42.58	9198.63	
3774.09	42.50	3045.58	42.50	2222.96	42.50	9042.63	42.5
3692.34	42.42	2991.39	42.42	2198.98	42.42	8882.71	
3609.70	42.33	2936.39	42.33	2173.65	42.33	8719.74	
3526.21	42.25	2880.60	42.25	2147.22	42.25	8554.02	
3441.89	42.17	2824.05	42.17	2119.82	42.17	8385.76	
3356.77	42.08	2766.80	42.08	2091.56	42.08	8215.13	
3270.90	42.00	2708.85	42.00	2062.52	42.00	8042.27	42
3184.28	41.92	2650.24	41.92	2032.75	41.92	7867.27	
3096.96	41.83	2590.99	41.83	2002.30	41.83	7690.25	
3008.96	41.75	2531.14	41.75	1971.21	41.75	7511.30	
2920.29	41.67	2470.69	41.67	1939.51	41.67	7330.50	
2830.99	41.58	2409.67	41.58	1907.26	41.58	7147.93	
2741.08	41.50	2348.11	41.50	1874.46	41.50	6963.65	41.5
2650.58	41.42	2286.03	41.42	1841.14	41.42	6777.75	
2559.51	41.33	2223.43	41.33	1807.34	41.33	6590.27	
2467.89	41.25	2160.34	41.25	1773.06	41.25	6401.29	
2375.74	41.17	2096.79	41.17	1738.33	41.17	6210.86	
2283.08	41.08	2032.78	41.08	1703.18	41.08	6019.03	
2189.93	41.00	1968.32	41.00	1667.61	41.00	5825.86	41
2096.32	40.92	1903.45	40.92	1631.64	40.92	5631.40	
2002.26	40.83	1838.17	40.83	1595.28	40.83	5435.71	
1907.77	40.75	1772.49	40.75	1558.56	40.75	5238.82	

1812.86	40.67	1706.44	40.67	1521.49	40.67	5040.79	
1717.56	40.58	1640.01	40.58	1484.07	40.58	4841.65	
1621.88	40.50	1573.23	40.50	1446.33	40.50	4641.44	40.5
1525.84	40.42	1506.12	40.42	1408.27	40.42	4440.23	
1429.45	40.33	1438.70	40.33	1369.90	40.33	4238.04	
1332.74	40.25	1370.96	40.25	1331.23	40.25	4034.93	
1235.71	40.17	1302.92	40.17	1292.28	40.17	3830.91	
1138.39	40.08	1234.60	40.08	1253.06	40.08	3626.05	
1040.79	40.00	1166.01	40.00	1213.57	40.00	3420.36	40
942.92	39.92	1097.15	39.92	1173.82	39.92	3213.89	
844.80	39.83	1028.05	39.83	1133.82	39.83	3006.68	
746.45	39.75	958.72	39.75	1093.59	39.75	2798.76	
647.87	39.67	889.15	39.67	1053.13	39.67	2590.15	
549.09	39.58	819.38	39.58	1012.44	39.58	2380.90	
450.00	39.50	749.40	39.50	971.53	39.50	2170.93	39.5
412.50	39.42	679.23	39.42	930.43	39.42	2022.16	
375.00	39.33	608.88	39.33	889.13	39.33	1873.02	
337.50	39.25	538.36	39.25	847.65	39.25	1723.51	
300.00	39.17	467.68	39.17	805.98	39.17	1573.66	
262.50	39.08	396.85	39.08	764.14	39.08	1423.49	
225.00	39.00	325.80	39.00	722.14	39.00	1272.94	39
187.50	38.92	298.65	38.92	679.97	38.92	1166.12	
150.00	38.83	271.50	38.83	637.66	38.83	1059.16	
112.50	38.75	244.35	38.75	595.19	38.75	952.04	
75.00	38.67	217.20	38.67	552.60	38.67	844.80	
37.50	38.58	190.05	38.58	509.87	38.58	737.42	
		162.90	38.50	467.01	38.50	629.91	38.5
		135.75	38.42	424.04	38.42	559.79	
		108.60	38.33	380.96	38.33	489.56	
		81.45	38.25	337.77	38.25	419.22	
		54.30	38.17	294.49	38.17	348.79	
		27.15	38.08	251.11	38.08	278.26	
				207.60	38.00	207.60	38
				190.30	37.92	190.30	
				173.00	37.83	173.00	
				155.70	37.75	155.70	
				138.40	37.67	138.40	
				121.10	37.58	121.10	
				103.80	37.50	103.80	37.5
				86.50	37.42	86.50	
				69.20	37.33	69.20	
				51.90	37.25	51.90	
				34.60	37.17	34.60	
				17.30	37.08	17.30	

VOLUME CALCULATIONS

for Pond Routing

ACTUAL ELEV.	DEPTH (FT)	VOLUME (AC-FT)	Q (CFS)
39	0	0.030	0.01
40	0.75	0.080	1.30
40.5	1.25	0.108	1.99
41	1.75	0.135	2.49
41.5	2.25	0.161	2.91
42	2.75	0.186	3.28
42.5	3.25	0.209	3.61
43	3.75	0.230	3.91
43.5	4.25	0.248	4.19
44	4.75	0.262	4.45
44.5	5.25	0.273	4.70
45	5.75	0.282	4.93
45.5	6.25	0.288	5.16
46	6.75	0.296	5.37

<u>Orifice Equation</u>

Q = CA SQRT(2gH)

C = 0.6

Diameter (in) 9

Area (ft^2)= 0.44178647

g = 32.2

H (Ft) = Depth of water above center of orifice

Q (CFS)= Flow

APPENDIX D

ADS INFILTRATOR SPECIFICATIONS

PROJECT INFORMATION	
ENGINEERED PRODUCT MANAGER	PEGGY GRAHAM 770-882-4303 PEGGY.GRAHAM@ADS-PIPE.COM
ADS SALES REP	PETER NICHOLS 505-301-5804 PETER.NICHOLS@ADS-PIPE.COM
PROJECT NO	84251

ADS

ADVANCED DRAINAGE SYSTEMS, INC.

SAFCU

ALBUQUERQUE, NM

STORMWATER CHAMBER SPECIFICATIONS

1. CHAMBERS SHALL BE STORMTECH MC-4500 OR APPROVED EQUAL.
2. CHAMBERS SHALL BE MANUFACTURED FROM VIRGIN IMPACT-MODIFIED POLYPROPYLENE COPOLYMERS.
3. CHAMBER ROWS SHALL PROVIDE CONTINUOUS UNOBSTRUCTED INTERNAL SPACE WITH NO INTERNAL SUPPORT PANELS THAT WOULD IMPEDE FLOW OR LIMIT ACCESS FOR INSPECTION.
4. THE STRUCTURAL DESIGN OF THE CHAMBERS, THE STRUCTURAL BACKFILL, AND THE INSTALLATION REQUIREMENTS SHALL ENSURE THAT THE LOAD FACTORS SPECIFIED IN THE AASHTO LRFD BRIDGE DESIGN SPECIFICATIONS, SECTION 12.12 ARE MET FOR: 1) LONG-DURATION DEAD LOADS AND 2) SHORT-DURATION LIVE LOADS, BASED ON THE AASHTO DESIGN TRUCK WITH CONSIDERATION FOR IMPACT AND MULTIPLE VEHICLE PRESENCES.
5. CHAMBERS SHALL MEET THE REQUIREMENTS OF ASTM F2418, "STANDARD SPECIFICATION FOR POLYPROPYLENE (PP) CORRUGATED WALL STORMWATER COLLECTION CHAMBERS".
6. CHAMBERS SHALL BE DESIGNED AND ALLOWABLE LOADS DETERMINED IN ACCORDANCE WITH ASTM F2787, "STANDARD PRACTICE FOR STRUCTURAL DESIGN OF THERMOPLASTIC CORRUGATED WALL STORMWATER COLLECTION CHAMBERS".
7. ONLY CHAMBERS THAT ARE APPROVED BY THE SITE DESIGN ENGINEER WILL BE ALLOWED. THE CHAMBER MANUFACTURER SHALL SUBMIT THE FOLLOWING UPON REQUEST TO THE SITE DESIGN ENGINEER FOR APPROVAL BEFORE DELIVERING CHAMBERS TO THE PROJECT SITE:
   - a. A STRUCTURAL EVALUATION SEALED BY A REGISTERED PROFESSIONAL ENGINEER THAT DEMONSTRATES THAT THE SAFETY FACTORS ARE GREATER THAN OR EQUAL TO 1.95 FOR DEAD LOAD AND 1.75 FOR LIVE LOAD, THE MINIMUM REQUIRED BY ASTM F2787 AND BY AASHTO FOR THERMOPLASTIC PIPE.
   - b. A STRUCTURAL EVALUATION SEALED BY A REGISTERED PROFESSIONAL ENGINEER THAT DEMONSTRATES THAT THE LOAD FACTORS SPECIFIED IN THE AASHTO LRFD BRIDGE DESIGN SPECIFICATIONS, SECTION 12.12 ARE MET. THE 50 YEAR CREEP MODULUS DATA SPECIFIED IN ASTM F2418 MUST BE USED AS PART OF THE AASHTO STRUCTURAL EVALUATION TO VERIFY LONG-TERM PERFORMANCE.
   - c. STRUCTURAL CROSS SECTION DETAIL ON WHICH THE STRUCTURAL EVALUATION IS BASED.
8. CHAMBERS AND END CAPS SHALL BE PRODUCED AT AN ISO 9001 CERTIFIED MANUFACTURING FACILITY.

IMPORTANT - NOTES FOR THE BIDDING AND INSTALLATION OF MC-4500 CHAMBER SYSTEM

1. STORMTECH MC-4500 CHAMBERS SHALL NOT BE INSTALLED UNTIL THE MANUFACTURER'S REPRESENTITIVE HAS COMPLETED A PRE-CONSTRUCTION MEETING WITH THE INSTALLERS.
2. STORMTECH MC-4500 CHAMBERS SHALL BE INSTALLED IN ACCORDANCE WITH THE "STORMTECH MC-3500/MC-4500 CONSTRUCTION GUIDE".
3. CHAMBERS ARE NOT TO BE BACKFILLED WITH A DOZER OR EXCAVATOR SITUATED OVER THE CHAMBERS. STORMTECH RECOMMENDS 3 BACKFILL METHODS:
   - STONESHOOTER LOCATED OFF THE CHAMBER BED.
   - BACKFILL AS ROWS ARE BUILT USING AN EXCAVATOR ON THE FOUNDATION STONE OR SUBGRADE.
   - BACKFILL FROM OUTSIDE THE EXCAVATION USING A LONG BOOM HOE OR EXCAVATOR.
4. THE FOUNDATION STONE SHALL BE LEVELED AND COMPACTED PRIOR TO PLACING CHAMBERS.
5. JOINTS BETWEEN CHAMBERS SHALL BE PROPERLY SEATED PRIOR TO PLACING STONE.
6. MAINTAIN MINIMUM 9" (230 mm) SPACING BETWEEN THE CHAMBER ROWS.
7. INLET AND OUTLET MANIFOLDS MUST BE INSERTED A MINIMUM OF 12" (300 mm) INTO CHAMBER END CAPS.
8. EMBEDMENT STONE SURROUNDING CHAMBERS MUST BE A CLEAN, CRUSHED, ANGULAR STONE 3/4-2" (20-50 mm) MEETING THE AASHTO M43 DESIGNATION OF #3 OR #4.
9. STONE SHALL BE BROUGHT UP EVENLY AROUND CHAMBERS SO AS NOT TO DISTORT THE CHAMBER SHAPE. STONE DEPTHS SHOULD NEVER DIFFER BY MORE THAN 12" (300 mm) BETWEEN ADJACENT CHAMBER ROWS.
10. STONE MUST BE PLACED ON THE TOP CENTER OF THE CHAMBER TO ANCHOR THE CHAMBERS IN PLACE AND PRESERVE ROW SPACING.
11. ADS RECOMMENDS THE USE OF "FLEXSTORM CATCH IT" INSERTS DURING CONSTRUCTION FOR ALL INLETS TO PROTECT THE SUBSURFACE STORMWATER MANAGEMENT SYSTEM FROM CONSTRUCTION SITE RUNOFF.

NOTES FOR CONSTRUCTION EQUIPMENT

1. STORMTECH MC-4500 CHAMBERS SHALL BE INSTALLED IN ACCORDANCE WITH THE "STORMTECH MC-3500/MC-4500 CONSTRUCTION GUIDE".
2. THE USE OF EQUIPMENT OVER MC-4500 CHAMBERS IS LIMITED:
   - NO EQUIPMENT IS ALLOWED ON BARE CHAMBERS.
   - NO RUBBER TIRED LOADER, DUMP TRUCK, OR EXCAVATORS ARE ALLOWED UNTIL PROPER FILL DEPTHS ARE REACHED IN ACCORDANCE WITH THE "STORMTECH MC-3500/MC-4500 CONSTRUCTION GUIDE".
   - WEIGHT LIMITS FOR CONSTRUCTION EQUIPMENT CAN BE FOUND IN THE "STORMTECH MC-3500/MC-4500 CONSTRUCTION GUIDE".
3. FULL 36" (900 mm) OF STABILIZED COVER MATERIALS OVER THE CHAMBERS IS REQUIRED FOR DUMP TRUCK TRAVEL OR DUMPING.

USE OF A DOZER TO PUSH EMBEDMENT STONE BETWEEN THE ROWS OF CHAMBERS MAY CAUSE DAMAGE TO CHAMBERS AND IS NOT AN ACCEPTABLE BACKFILL METHOD. ANY CHAMBERS DAMAGED BY USING THE "DUMP AND PUSH" METHOD ARE NOT COVERED UNDER THE STORMTECH STANDARD WARRANTY.

CONTACT STORMTECH AT 1-888-892-2694 WITH ANY QUESTIONS ON INSTALLATION REQUIREMENTS OR WEIGHT LIMITS FOR CONSTRUCTION EQUIPMENT.

ACCEPTABLE FILL MATERIALS: STORMTECH MC-4500 CHAMBER SYSTEMS

MATERIAL LOCATION		DESCRIPTION	AASHTO MATERIAL CLASSIFICATIONS	COMPACTION / DENSITY REQUIREMENT
D	FINAL FILL: FILL MATERIAL FOR LAYER 'D' STARTS FROM THE TOP OF THE 'C' LAYER TO THE BOTTOM OF FLEXIBLE PAVEMENT OR UNPAVED FINISHED GRADE ABOVE. NOTE THAT PAVEMENT SUBBASE MAY BE PART OF THE 'D' LAYER	ANY SOIL/ROCK MATERIALS, NATIVE SOILS, OR PER ENGINEER'S PLANS. CHECK PLANS FOR PAVEMENT SUBGRADE REQUIREMENTS	N/A	PREPARE PER SITE DESIGN ENGINEER'S PLANS. PAVED INSTALLATIONS MAY HAVE STRINGENT MATERIAL AND PREPARATION REQUIREMENTS
C	INITIAL FILL: FILL MATERIAL FOR LAYER 'C' STARTS FROM THE TOP OF THE EMBEDMENT STONE ('B' LAYER) TO 24" (600 mm) ABOVE THE TOP OF THE CHAMBER. NOTE THAT PAVEMENT SUBBASE MAY BE A PART OF THE 'C' LAYER	GRANULAR WELL-GRADED SOIL/AGGREGATE MIXTURES, <35% FINES OR PROCESSED AGGREGATE MOST PAVEMENT SUBBASE MATERIALS CAN BE USED IN LIEU OF THIS LAYER.	AASHTO M145[1] A-1, A-2-4, A-3 OR AASHTO M43[1] 3, 357, 4, 467, 5, 56, 57, 6, 67, 68, 7, 78, 8, 89, 9, 10	BEGIN COMPACTIONS AFTER 24" (600 mm) OF MATERIAL OVER THE CHAMBERS IS REACHED. COMPACT ADDITIONAL LAYERS IN 12" (300 mm) MAX LIFTS TO A MIN. 95% PROCTOR DENSITY FOR WELL GRADED MATERIAL AND 95% RELATIVE DENSITY FOR PROCESSED AGGREGATE MATERIALS
B	EMBEDMENT STONE: FILL SURROUNDING THE CHAMBERS FROM THE FOUNDATION STONE ('A' LAYER) TO THE 'C' LAYER ABOVE	CLEAN, CRUSHED, ANGULAR STONE, NOMINAL SIZE DISTRIBUTION BETWEEN 3/4-2 INCH (20-50 mm)	AASHTO M43[1] 3, 4	NO COMPACTION REQUIRED
A	FOUNDATION STONE: FILL BELOW CHAMBERS FROM THE SUBGRADE UP TO THE FOOT (BOTTOM) OF THE CHAMBER	CLEAN, CRUSHED, ANGULAR STONE, NOMINAL SIZE DISTRIBUTION BETWEEN 3/4-2 INCH (20-50 mm)	AASHTO M43[1] 3, 4	PLATE COMPACT OR ROLL TO ACHIEVE A FLAT SURFACE [2,3]

PLEASE NOTE

1. THE LISTED AASHTO DESIGNATIONS ARE FOR GRADATIONS ONLY. THE STONE MUST ALSO BE CLEAN, CRUSHED, ANGULAR. FOR EXAMPLE, A SPECIFICATION FOR #4 STONE WOULD STATE "CLEAN, CRUSHED, ANGULAR NO. 4 (AASHTO M43) STONE"
2. STORMTECH COMPACTION REQUIREMENTS ARE MET FOR 'A' LOCATION MATERIALS WHEN PLACED AND COMPACTED IN 9" (230 mm) (MAX.) LIFTS USING TWO FULL COVERAGES WITH A VIBRATORY COMPACTOR.
3. WHERE INFILTRATION SURFACES MAY BE COMPROMISED BY COMPACTION, FOR STANDARD DESIGN LOAD CONDITIONS, A FLAT SURFACE MAY BE ACHIEVED BY RAKING OR DRAGGING WITHOUT COMPACTION EQUIPMENT. FOR SPECIAL LOAD DESIGNS, CONTACT STORMTECH FOR COMPACTION REQUIREMENTS.

SINGLE CHAMBER

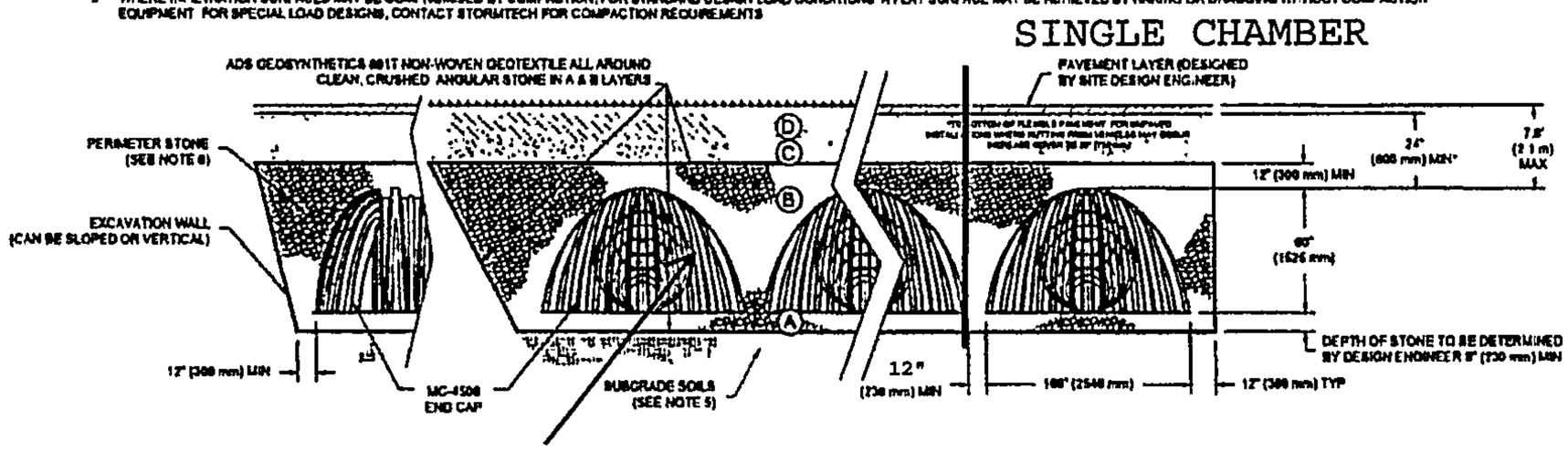

MULTIPLE CHAMBERS NOT USED FOR THIS APPLICATION

NOTES:

1. MC-4500 CHAMBERS SHALL CONFORM TO THE REQUIREMENTS OF ASTM F2418 "STANDARD SPECIFICATION FOR POLYPROPYLENE (PP) CORRUGATED WALL STORMWATER COLLECTION CHAMBERS"
2. MC-4500 CHAMBERS SHALL BE DESIGNED IN ACCORDANCE WITH ASTM F2787 "STANDARD PRACTICE FOR STRUCTURAL DESIGN OF THERMOPLASTIC CORRUGATED WALL STORMWATER COLLECTION CHAMBERS"
3. "ACCEPTABLE FILL MATERIALS" TABLE ABOVE PROVIDES MATERIAL LOCATIONS, DESCRIPTIONS, GRADATIONS, AND COMPACTION REQUIREMENTS FOR FOUNDATION, EMBEDMENT, AND FILL MATERIALS
4. THE "SITE DESIGN ENGINEER" REFERS TO THE ENGINEER RESPONSIBLE FOR THE DESIGN AND LAYOUT OF THE STORMTECH CHAMBERS FOR THIS PROJECT.
5. THE SITE DESIGN ENGINEER IS RESPONSIBLE FOR ASSESSING THE BEARING RESISTANCE (ALLOWABLE BEARING CAPACITY) OF THE SUBGRADE SOILS AND THE DEPTH OF FOUNDATION STONE WITH CONSIDERATION FOR THE RANGE OF EXPECTED SOIL MOISTURE CONDITIONS.
6. PERIMETER STONE MUST BE EXTENDED HORIZONTALLY TO THE EXCAVATION WALL FOR BOTH VERTICAL AND SLOPED EXCAVATION WALLS.
7. ONCE LAYER 'C' IS PLACED, ANY SOIL/MATERIAL CAN BE PLACED IN LAYER 'D' UP TO THE FINISHED GRADE. MOST PAVEMENT SUBBASE SOILS CAN BE USED TO REPLACE THE MATERIAL REQUIREMENTS OF LAYER 'C' OR 'D' AT THE SITE DESIGN ENGINEER'S DISCRETION.

SAFCA & STARBUCKS
ALBUQUERQUE, NM

DATE: 3/31/15 | DRAWN: VCM
PROJECT # 9081 | CHECKED: KAP

REV	DRW	CHK	DESCRIPTION

StormTech

ADS
4640 TRUEMAN BLVD
HILLIARD, OH 43026
1-800-733-7473

SHEET
3 OF 6

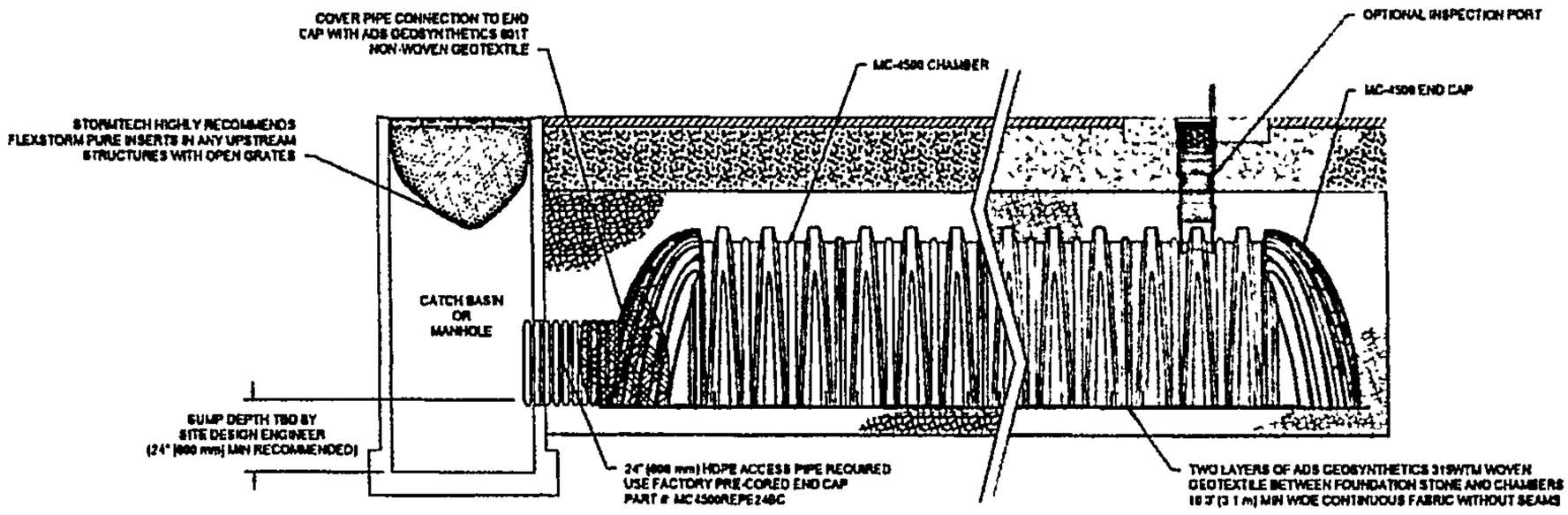

MC-4500 ISOLATOR ROW DETAIL
NTS

INSPECTION & MAINTENANCE

STEP 1) INSPECT ISOLATOR ROW FOR SEDIMENT
- A INSPECTION PORTS (IF PRESENT)
  - A 1 REMOVE/OPEN LID ON NYLOPLAST INLINE DRAIN
  - A 2 REMOVE AND CLEAN FLEXSTORM FILTER IF INSTALLED
  - A 3 USING A FLASHLIGHT AND STADIA ROD MEASURE DEPTH OF SEDIMENT AND RECORD ON MAINTENANCE LOG
  - A 4 LOWER A CAMERA INTO ISOLATOR ROW FOR VISUAL INSPECTION OF SEDIMENT LEVELS (OPTIONAL)
  - A 5 IF SEDIMENT IS AT, OR ABOVE, 3" (80 mm) PROCEED TO STEP 2 IF NOT, PROCEED TO STEP 3
- B ALL ISOLATOR ROWS
  - B 1 REMOVE COVER FROM STRUCTURE AT UPSTREAM END OF ISOLATOR ROW
  - B 2 USING A FLASHLIGHT INSPECT DOWN THE ISOLATOR ROW THROUGH OUTLET PIPE
    - i) MIRRORS ON POLES OR CAMERAS MAY BE USED TO AVOID A CONFINED SPACE ENTRY
    - ii) FOLLOW OSHA REGULATIONS FOR CONFINED SPACE ENTRY IF ENTERING MANHOLE
  - B 3 IF SEDIMENT IS AT, OR ABOVE, 3" (80 mm) PROCEED TO STEP 2 IF NOT, PROCEED TO STEP 3.

STEP 2) CLEAN OUT ISOLATOR ROW USING THE JETVAC PROCESS
- A. A FIXED CULVERT CLEANING NOZZLE WITH REAR FACING SPREAD OF 45" (1 1 m) OR MORE IS PREFERRED
- B APPLY MULTIPLE PASSES OF JETVAC UNTIL BACKFLUSH WATER IS CLEAN
- C VACUUM STRUCTURE SUMP AS REQUIRED

STEP 3) REPLACE ALL COVERS, GRATES FILTERS, AND LIDS. RECORD OBSERVATIONS AND ACTIONS

STEP 4) INSPECT AND CLEAN BASINS AND MANHOLES UPSTREAM OF THE STORMTECH SYSTEM

NOTES

1. INSPECT EVERY 6 MONTHS DURING THE FIRST YEAR OF OPERATION ADJUST THE INSPECTION INTERVAL BASED ON PREVIOUS OBSERVATIONS OF SEDIMENT ACCUMULATION AND HIGH WATER ELEVATIONS
2. CONDUCT JETTING AND VACTORING ANNUALLY OR WHEN INSPECTION SHOWS THAT MAINTENANCE IS NECESSARY

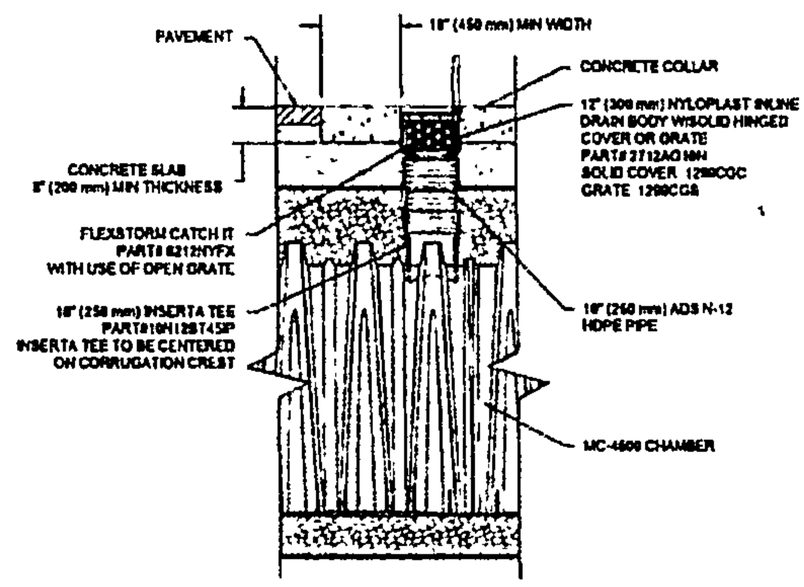

MC-4500 INSPECTION PORT DETAIL
NTS

SAFCA & STARBUCKS
ALBUQUERQUE, NM

REV	DRW	CHK	DESCRIPTION

DATE: 3/31/15 DRAWN: WCM
PROJECT #: 84061 CHECKED: KAP

StormTech

ADS 4640 TRUEMAN BLVD HILLIARD, OH 43026 1-800-821-6710

SHEET
4 OF 6

MC-4500 TECHNICAL SPECIFICATION

NTS

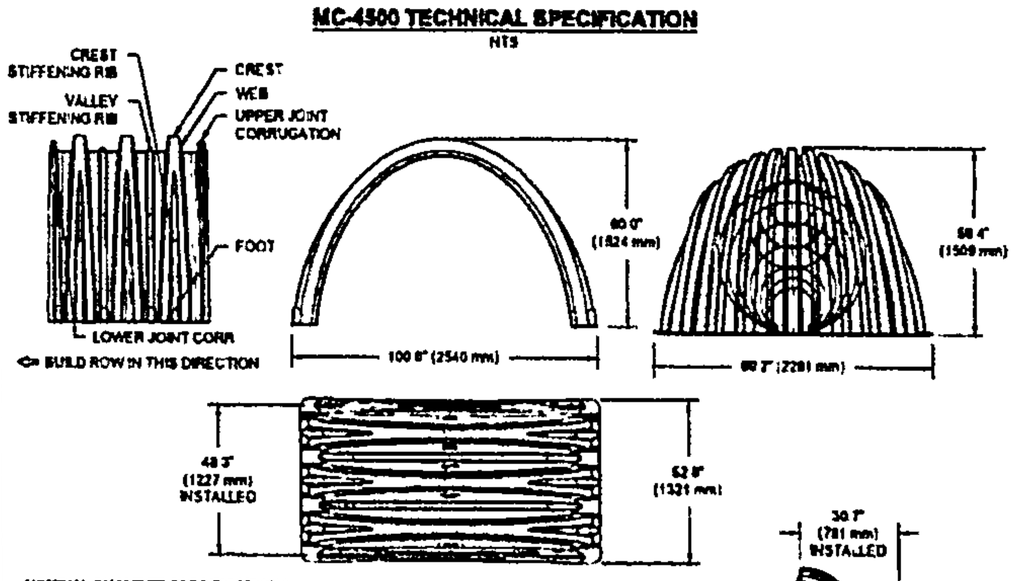

NOMINAL CHAMBER SPECIFICATIONS

SIZE (W X H X INSTALLED LENGTH)	100.0" X 60.0" X 48.3"	(2540 mm X 1524 mm X 1227 mm)
CHAMBER STORAGE	106.5 CUBIC FEET	(3.01 m³)
MINIMUM INSTALLED STORAGE*	162.0 CUBIC FEET	(4.60 m³)
WEIGHT	136.0 lbs	(60.0 kg)

NOMINAL END CAP SPECIFICATIONS

SIZE (W X H X INSTALLED LENGTH)	88.2" X 60.4" X 30.7"	(2291 mm X 1506 mm X 781 mm)
END CAP STORAGE	35.7 CUBIC FEET	(1.01 m³)
MINIMUM INSTALLED STORAGE*	106.7 CUBIC FEET	(3.06 m³)
WEIGHT	135.0 lbs	(61.2 kg)

*ASSUMES 12" (305 mm) STONE ABOVE 9" (229 mm) STONE FOUNDATION AND BETWEEN CHAMBERS
12" (305 mm) STONE PERIMETER IN FRONT OF END CAPS AND 40% STONE POROSITY

STUBS AT BOTTOM OF END CAP FOR PART NUMBERS ENDING WITH "B"
STUBS AT TOP OF END CAP FOR PART NUMBERS ENDING WITH "T"

PART #	STUB	B	C
MC4500REPE06T	6" (150 mm)	42.54" (1.081 m)	—
MC4500REPE06B		—	0.87" (22 mm)
MC4500REPE08T	8" (200 mm)	48.50" (1.029 m)	—
MC4500REPE08B		—	1.01" (26 mm)
MC4500REPE10T	10" (250 mm)	34.37" (873 mm)	—
MC4500REPE10B		—	1.33" (34 mm)
MC4500REPE12T	12" (300 mm)	35.50" (902 mm)	—
MC4500REPE12B		—	1.56" (39 mm)
MC4500REPE15T	15" (375 mm)	32.72" (831 mm)	—
MC4500REPE15B		—	1.70" (43 mm)
MC4500REPE18TC	18" (450 mm)	29.38" (746 mm)	—
MC4500REPE18BC		—	1.97" (50 mm)
MC4500REPE24TC	24" (600 mm)	23.85" (585 mm)	—
MC4500REPE24BC		—	2.28" (57 mm)
MC4500REPE30BC	30" (750 mm)	—	2.95" (75 mm)
MC4500REPE36BC	36" (900 mm)	—	3.25" (83 mm)
MC4500REPE42BC	42" (1050 mm)	—	3.56" (90 mm)

NOTE ALL DIMENSIONS ARE NOMINAL

CUSTOM PRECORED INVERTS ARE AVAILABLE UPON REQUEST. INVENTORIED MANIFOLDS INCLUDE 12-24" (300-600 mm) SIZE ON SIZE AND 15-48" (375-1200 mm) ECCENTRIC MANIFOLDS
CUSTOM INVERT LOCATIONS ON THE MC-4500 END CAP CUT IN THE FIELD ARE NOT RECOMMENDED FOR PIPE SIZES GREATER THAN 10" (250 mm)
THE INVERT LOCATION IN COLUMN "B" ARE THE HIGHTEST POSSIBLE FOR THE PIPE SIZE

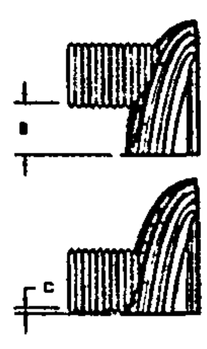

MC-SERIES END CAP INSERTION DETAIL

NTS

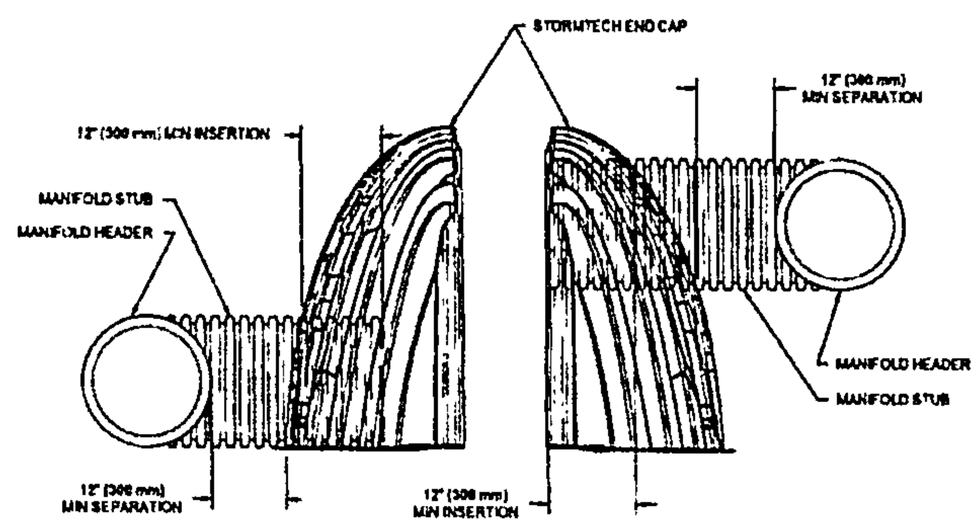

NOTE MANIFOLD STUB MUST BE LAID HORIZONTAL FOR A PROPER FIT IN END CAP OPENING

SAFCA & STARBUCKS
ALBUQUERQUE, NM

DATE	3/31/15	DRAWN	WCM
PROJECT # 9281		CHECKED	KAP

REV	DRW	CHK	DESCRIPTION

StormTech
4640 TRUEMAN BLVD
HILLIARD, OH 43026
1-888-TECH-ADS

SHEET
5 OF

NYLOPLAST DRAIN BASIN

NTS

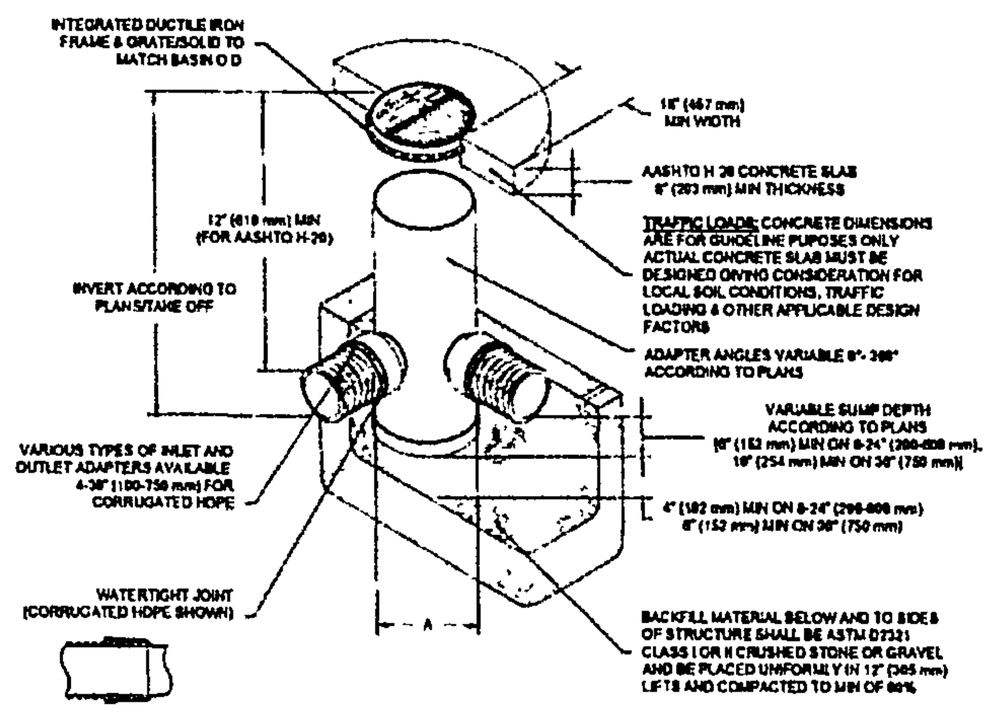

NOTES

1. 8-30" (200-750 mm) GRATES/SOLID COVERS SHALL BE DUCTILE IRON PER ASTM A536 GRADE 70-50-05
2. 12-30" (300-750 mm) FRAMES SHALL BE DUCTILE IRON PER ASTM A536 GRADE 70-50-05
3. DRAIN BASIN TO BE CUSTOM MANUFACTURED ACCORDING TO PLAN DETAILS
4. DRAINAGE CONNECTION STUB JOINT TIGHTNESS SHALL CONFORM TO ASTM D3212 FOR CORRUGATED HDPE (ADS & HANCOR DUAL WALL) & SDR 35 PVC
5. FOR COMPLETE DESIGN AND PRODUCT INFORMATION WWW.NYLOPLAST-US.COM
6. TO ORDER CALL 888-821-4710

A	PART #	GRATE/SOLID COVER OPTIONS		
8" (200 mm)	2806AG	PEDESTRIAN LIGHT DUTY	STANDARD LIGHT DUTY	SOLID LIGHT DUTY
10" (250 mm)	2810AG	PEDESTRIAN LIGHT DUTY	STANDARD LIGHT DUTY	SOLID LIGHT DUTY
12" (300 mm)	2612AG	PEDESTRIAN AASHTO H-10	STANDARD AASHTO H-20	SOLID AASHTO H-20
15" (375 mm)	2615AG	PEDESTRIAN AASHTO H-10	STANDARD AASHTO H-20	SOLID AASHTO H-20
18" (450 mm)	2618AG	PEDESTRIAN AASHTO H-10	STANDARD AASHTO H-20	SOLID AASHTO H-20
24" (600 mm)	2624AG	PEDESTRIAN AASHTO H-10	STANDARD AASHTO H-20	SOLID AASHTO H-20
30" (750 mm)	2630AG	PEDESTRIAN AASHTO H-20	STANDARD AASHTO H-20	SOLID AASHTO H-20

SAFCA & STARBUCKS
ALBUQUERQUE, NM

DATE: 3/31/15 DRAWN: WCM
PROJECT #: 84081 CHECKED: KAP

REV	DRW	CHK	DESCRIPTION

Nyloplast

ADS

SHEET
6 OF 6

City of Albuquerque

Planning Department

Development & Building Services Division

DRAINAGE AND TRANSPORTATION INFORMATION SHEET

(REV 02/2013)

Project Title: sandia area federal credit union-starbucks Building Permit #: _____ City Drainage #: F22D002

DRB#: _____ EPC#: _____ Work Order#: _____

Legal Description: lots 3a,3b,3c new holiday park

City Address: ~~13101~~ 11301 montgomery ne

Engineering Firm: RIO GRANDE ENGINEERING Contact: DAVID SOULE

Address: PO BOX 93924, ALBUQUERQUE, NM 87199

Phone#: 505.321.9099 Fax#: 505.872.0999 E-mail: DAVID@RIOGRANDEENGINEERING.COM

Owner: sandia area federal credit union Contact: _____

Address: _____

Phone#: _____ Fax#: _____ E-mail: _____

Architect: slagle Herr Contact: _____

Address: _____

Phone#: _____ Fax#: _____ E-mail: _____

Surveyor: CONSTRUCTION SURVEY INCORPORATED Contact: JOHN GALLEGOS

Address: _____

Phone#: 917.8921 Fax#: _____ E-mail: _____

Contractor: _____ Contact: _____

Address: _____

Phone#: _____ Fax#: _____ E-mail: _____

TYPE OF SUBMITTAL:

____ DRAINAGE REPORT
X DRAINAGE PLAN 1st SUBMITTAL
____ DRAINAGE PLAN RESUBMITTAL
____ CONCEPTUAL G & D PLAN
____ GRADING PLAN
____ EROSION & SEDIMENT CONTROL PLAN (ESC)
____ ENGINEER'S CERT (HYDROLOGY)
____ CLOMR/LOMR
____ TRAFFIC CIRCULATION LAYOUT (TCL)
____ ENGINEER'S CERT (TCL)
____ ENGINEER'S CERT (DRB SITE PLAN)
____ ENGINEER'S CERT (ESC)
____ SO-19
____ OTHER (SPECIFY)

CHECK TYPE OF APPROVAL/ACCEPTANCE SOUGHT:

____ SIA/FINANCIAL GUARANTEE RELEASE
____ PRELIMINARY PLAT APPROVAL
____ S. DEV. PLAN FOR SUB'D APPROVAL
____ S. DEV. FOR BLDG. PERMIT APPROVAL
____ SECTOR PLAN APPROVAL
____ FINAL PLAT APPROVAL
____ CERTIFICATE OF OCCUPANCY (PERM)
____ CERTIFICATE OF OCCUPANCY (TCL TEMP)
____ FOUNDATION PERMIT APPROVAL
X BUILDING PERMIT APPROVAL
X GRADING PERMIT APPROVAL
____ PAVING PERMIT APPROVAL
____ WORK ORDER APPROVAL
____ GRADING CERTIFICATION

____ SO-19 APPROVAL
____ ESC PERMIT APPROVAL
____ ESC CERT. ACCEPTANCE
____ OTHER (SPECIFY)

RECEIVED
~~MAY~~ 29 2015
6-1
LAND DEVELOPMENT SECTION

verified
$50.00

WAS A PRE-DESIGN CONFERENCE ATTENDED: ____ Yes X No ____ Copy Provided

DATE SUBMITTED: 5/29/15 By: _____

Requests for approvals of Site Development Plans and/or Subdivision Plats shall be accompanied by a drainage submittal. The particular nature, location, anc scope to the proposed development defines the degree of drainage detail. One or more of the following levels of submittal may be required based on the followin

1. **Conceptual Grading and Drainage Plan**: Required for approval of Site Development Plans greater than five (5) acres and Sector Plans
2. **Drainage Plans**: Required for building permits, grading permits, paving permits and site plans less than five (5) acres
3. **Drainage Report**: Required for subdivision containing more than ten (10) lots or constituting five (5) acres or more
4. **Erosion and Sediment Control Plan:** Required for any new development and redevelopment site with 1-acre or more of land disturbing area, including project less than 1-acre than are part of a larger common plan of development

CITY OF ALBUQUERQUE

June 12, 2015

David Soule, PE
Rio Grande Engineering
PO Box 93924
Albuquerque, NM 87199

RE: **Sandia Area Credit Union and Starbucks, 11301 Montgomery Boulevard**
Grading and Drainage Plan
Engineer's Stamp Date 6-01-2015 (File: F22-D002)

Dear Mr. Soule:

Based upon the information provided in your submittal received 6-01-15, the above referenced plan cannot be approved for Building Permit until the following comments are addressed:

PO Box 1293

Albuquerque

New Mexico 87103

www.cabq.gov

1) Show first flush calculation within the report. Show roof drain locations, and explain how first flush is being managed especially with regard to impervious facilities on the east side of the site. It appears as though an additional first flush pond may be needed to handle first flush from the building on the southeast corner of the site with added curb cuts to allow drainage into the pond from the drive-thru area. Label all first flush ponds as "first flush" along with volume information.

2) Show flow arrows and lot lines on the grading and drainage plan.

3) What are the curb cuts in the medians to the north of the Starbucks for? If a first flush pond was intended here, label it, and provide elevation and volume information. Provide curb flowline elevations at all curb openings.

4) Show existing curb elevations on Cairo at the access point, and show existing elevations along west property line to show how these existing elevations relate to new elevations. On the north side of the site, provide elevations for the existing building that abuts the property line, and ensure that the new contours tie into the correct existing contours.

5) Discuss what the temporary pond is for. What is the sizing of it based on since the 100-year 6-hour volume is much higher for Basin A? Discuss what the plans are for Basin A since an impervious area of 0.988 acres was given in the computations.

Also provide riprap within the proposed swale to the bottom of the pond from the east to prevent erosion.

6) Provide a larger basin map. An 11x17 would be easier to read along with upsizing of the text for the labeling of the basins.

7) Label grate elevation for the new Type "D" inlet. Provide a detail showing all elevation information for inlet including information for orifice. Show how this inlet ties into the storm chambers with pipe invert and size information.

8) Label size of Nyloplat junction boxes and the pipes that tie into the storm chambers. Between the high invert elevation of 48.00 for discharge from the site and the high invert elevations of the connecting nyloplat junction boxes, how does the entire system manage to drain, given that the top of the storm chambers are set at elevation 42.50??

9) For the AHYMO Run, show what the pond routing information is based on. Provide computations based on orifice for which the elevations given match what is on the plan.

10) Discuss what the downstream capacity of 4.7 cfs for the existing outlet is based on. The proposed discharge flow should match downstream capacity.

11) On the proposed layout for the storm chambers with the report, label the number of chambers used and the volume of each chamber. Then provide the overall volume for the chamber on this sheet and on the plan view. Provide a cross-sectional view of the storm chamber similar to what is shown on the report showing a detail of the stone and fabric surrounding it if it is just for one row. (It should be similar to the cross-section provided in the report for the multiple chambers.)

12) In the report, explain location of infrastructure for which capacities calculations were provided. Where is there a channel? What are the "Volume Computations" based on? Also include capacity calculations for the sidewalk culvert and for the Type "D" inlet within the "Inlet Capacity Calculations". On the plan view for the grading and drainage plan, label the discharge flow from the site, and label the flow captured at each of the inlets.

13) North of the credit union building, there is a curb cut elevation at an elevation of 49.40 which should be lowered if the intent is to drain to the "water quality pond". Also, the nearby "water quality" pond is labeled at an elevation of 46.50 for the top elevation. Correct discrepancy. Also, provide additional elevation information for the corners of the trash receptacle area.

14) If the proposed elevations shown are at flowline, provide general note to this effect.

15) Show AHYMO Run in 10-minute increments until about 90% of the pond has drained to demonstrate a more clear relationship between inflow and outflow. How does the pond have a constant outflow of 1.68 cfs for a time period of more than 8 days when it peaks at 1.75 hours??

16) Provide a small valley gutter from the sidewalk culvert from Starbucks across the accessway to prevent flow from discharging out the accessway.

If you have any questions, you can contact me at 924-3924.

Sincerely,

Jeanne Wolfenbarger, P.E.
Senior Engineer, Planning Dept.
Development Review Services

Orig: Drainage file
c.pdf Addressee via Email

CITY OF ALBUQUERQUE

PO Box 1293

Albuquerque

New Mexico 87103

www.cabq.gov

Albuquerque - Making History 1706-2006

DRAINAGE REPORT

For

SANDIA ARE FEDERAL CREDIT UNION/STARBUCKS

~~11301 MONTOMERY~~ NE

13101 montgomery

Albuquerque, New Mexico

Prepared by

Rio Grande Engineering
PO Box 93924
Albuquerque, New Mexico 87199

RECEIVED
MAY 29 2015
LAND DEVELOPMENT SECTION

MAY 2015

David Soule P.E. No. 14522

TABLE OF CONTENTS

Purpose 3
Introduction 3
Existing Conditions 3
Exhibit A-Vicinity Map 4
Proposed Conditions 5
Summary 5

Appendix

Site hydrology and hydraulic calculations ..... A
AHYMO ..... B
ADS infiltrator specifications C

Map

Site Grading and Drainage Plan

PURPOSE

The purpose of this report is to provide the Drainage Management Plan for the redevelopment of a 3 acre property located at 11301 Montgomery. This plan was prepared in accordance with the City of Albuquerque design regulations, utilizing the City of Albuquerque's Development Process Manual drainage guidelines. This report will demonstrate that the grading does not adversely affect the surrounding properties, nor the upstream or downstream facilities.

INTRODUCTION

The subject of this report, as shown on the Exhibit A, is a 3 -acre parcel of land located on the north side of Montgomery between Cairo and Juan Tabo NE The legal description of this site is tract c1,c2,c3 of the New Holiday Park subdivision. As shown on FIRM map35013C0144G, the entire site is located within Flood Zone X. The site has been fully developed in the past and this is a redevelopment of this site.

The site was designed with a buried retention tank and metered outflow. The outflow was limited to the 100-year 6-hour discharge rate assuming 100% native. The proposed development shall match existing patterns and limit the flow to similar rate. In addition the site shall retain onsite the first flush volume required.

EXISTING CONDITIONS

The site currently is graded per the grading plan F22-d2. The site drains to a single type d inlet. This inlet is connected to a large underground concrete vault. The outlet is sized such that the flow will not exceed 4.7 cfs.

PROPOSED CONDITIONS

The proposed improvements consist of removal an replacement of the existing pavement and the construction of two new buildings and one parcel for future development. The lots have cross lot drainage easements and will free discharge to two inlets that are connected to an underground infiltration chamber. The site contains 5 onsite sub basins, which were partitioned to verify the capacity of each collection and conveyance structure. Once the flows are captured they are stored in the infiltration system and metered out by a 9" orifice plate on the existing storm drain stub. The system was modeled using the AHYMO computer program. As shown on the computer model, the site will discharge 5.19 cfsm which is .49 cfs greater than the intial system, but due to site constraints we feel the impact is negligible. A copy of the site hydrology and capacity calculations is included in appendix A. The AHYMO Model is located in appendix B. The infiltrator specifications are located in appendix C. The site is required to retain 3,141 cubic feet as a first flush; this site retains 4,411 cubic feet.

typo,

Again A: future developed?

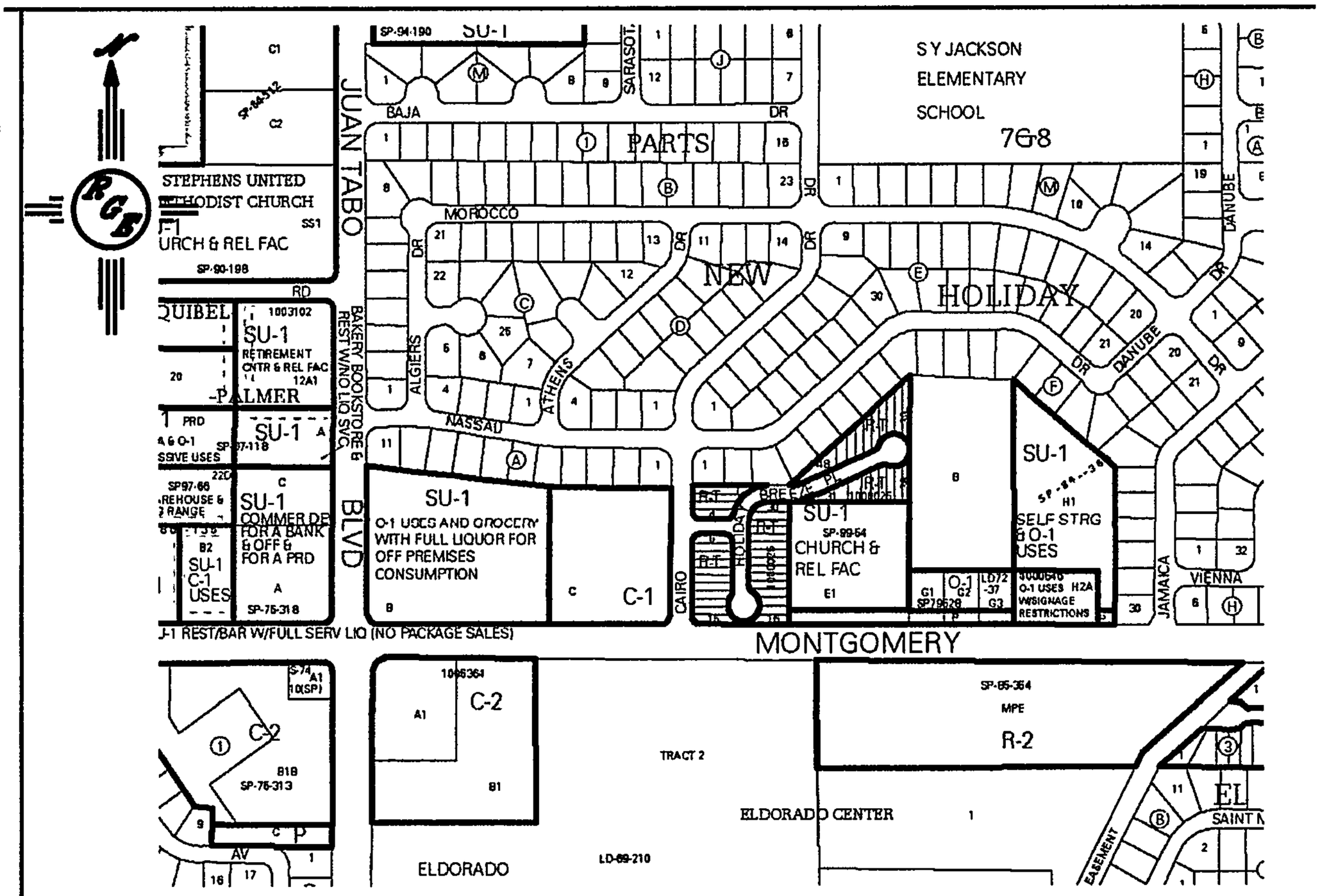

VICINITY MAP: F-22-Z

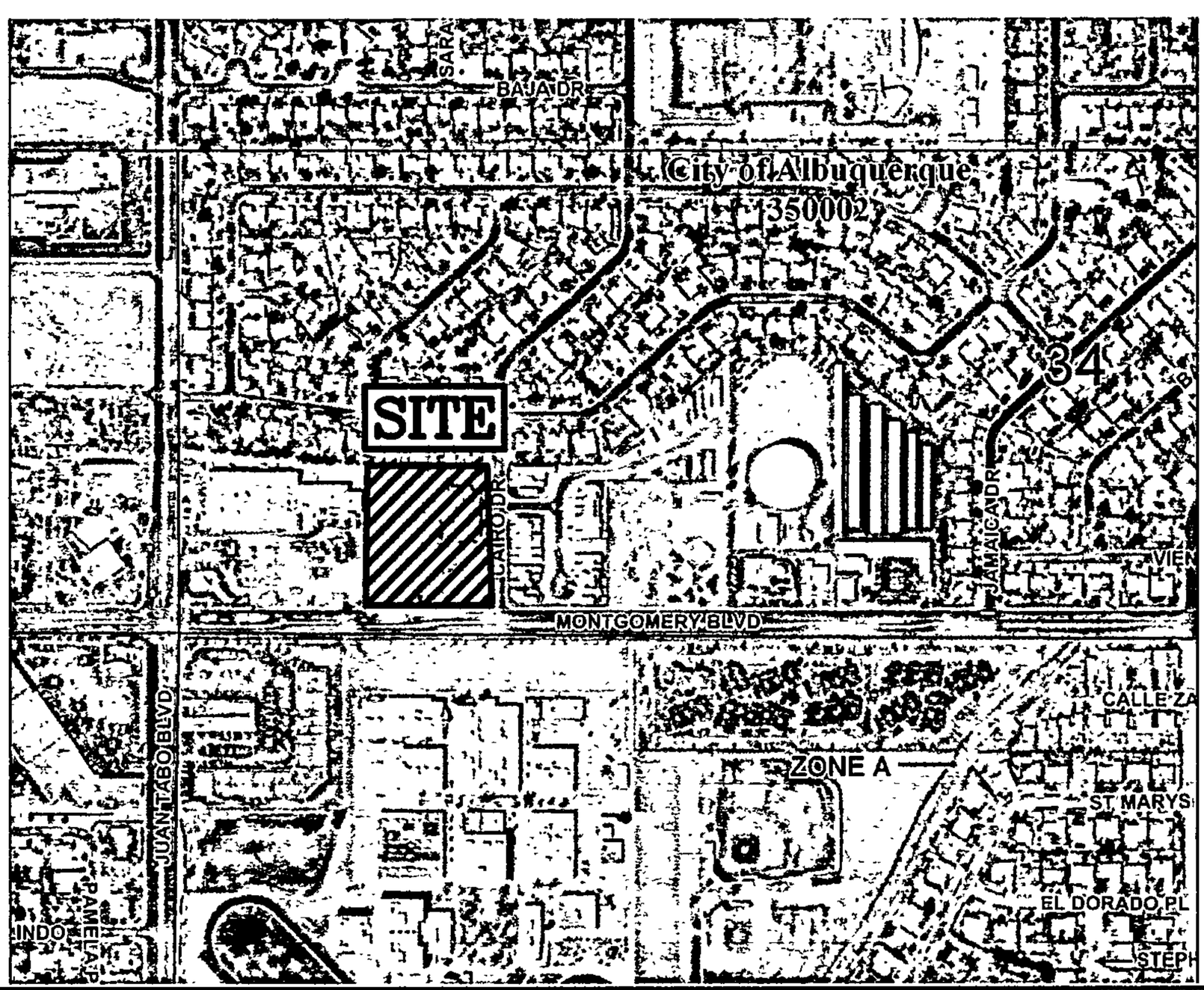

FIRM MAP: 35001C0144G

LEGAL DESCRIPTION:

TRACT C, THE NEW HOLIDAY PARK SUBDIVISION
CITY OF ALBUQUERQUE
BERNALILLO COUNTY, NEW MEXICO

SUMMARY AND RECOMMENDATIONS

This project is a redevelopment of and existing site. The redevelopment is consistent with the approved grading plan. The site will discharge 5.19 cfs and retain the first flush volume. The development will not affect the upstream or downstream properties or infrastructure. Since the effected area site encompasses more than 1 acre, a NPDES permit will be required prior to any construction activity.

APPENDIX A

SITE HYDROLOGY AND HYDRAULIC CALCULATIONS

EROSION CONTROL NOTES:

1. CONTRACTOR IS RESPONSIBLE FOR OBTAINING A TOPSOIL DISTURBANCE PERMIT PRIOR TO BEGINNING WORK.

2. CONTRACTOR IS RESPONSIBLE FOR MAINTAINING RUN-OFF ON SITE DURING CONSTRUCTION.

3. CONTRACTOR IS RESPONSIBLE FOR CLEANING ALL SEDIMENT THAT GETS INTO EXISTING RIGHT-OF-WAY

4. REPAIR OF DAMAGED FACILITIES AND CLEANUP OF SEDIMENT ACCUMULATIONS ON ADJACENT PROPERTIES AND IN PUBLIC FACILITIES IS THE RESPONSIBILITY OF THE CONTRACTOR.

5. ALL EXPOSED EARTH SURFACES MUST BE PROTECTED FROM WIND AND WATER EROSION PRIOR TO FINAL ACCEPTANCE OF ANY PROJECT.

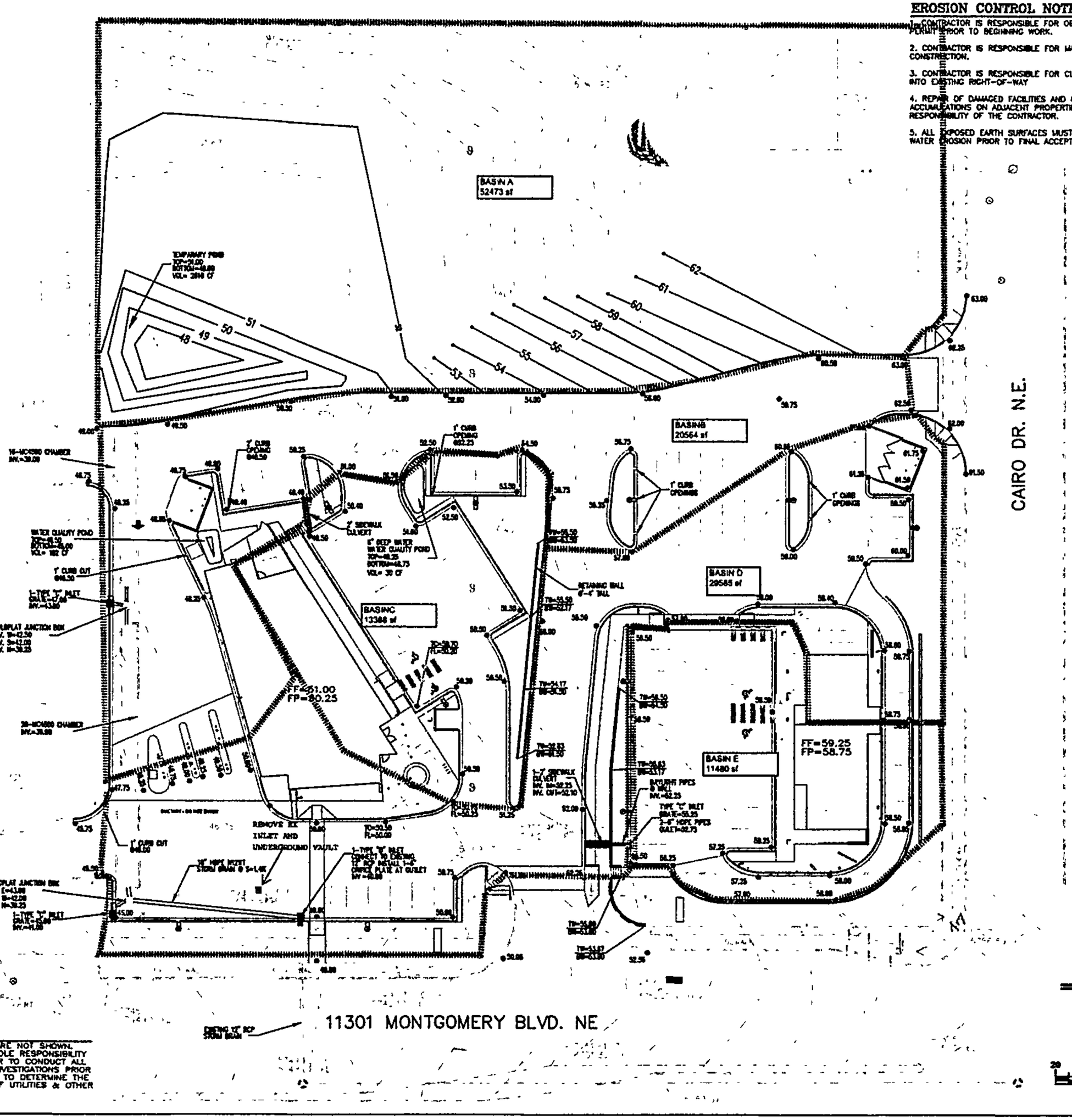

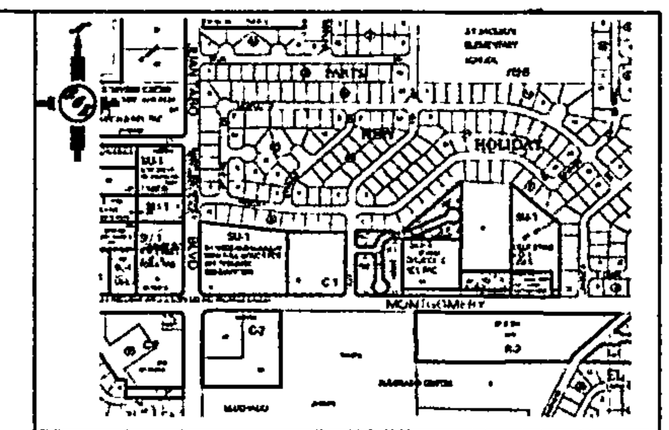

VICINITY MAP: F-22-Z

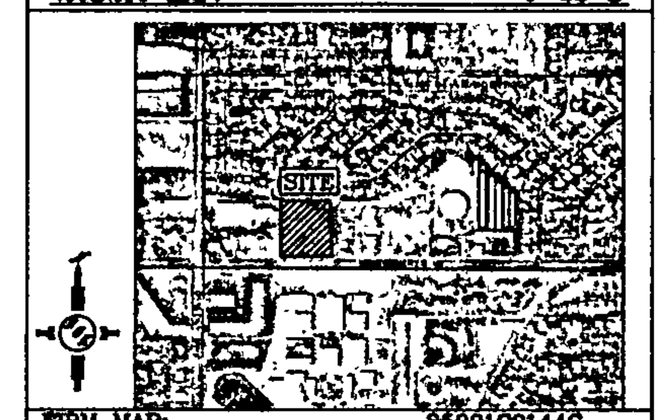

FIRM MAP: 35001C0144G

LEGAL DESCRIPTION:

TRACT C, THE NEW HOLIDAY PARK SUBDIVISION
CITY OF ALBUQUERQUE
BERNALILLO COUNTY, NEW MEXICO

NOTES:

1. ALL SPOT ELEVATIONS REPRESENT FLOWLINE ELEVATION UNLESS OTHERWISE NOTED
2. UNDERGROUND WATER RETENTION SYSTEM SHALL BE STORM TECH MC4500.00

LEGEND

- EXISTING CONTOUR
- EXISTING INDEX CONTOUR
- PROPOSED CONTOUR
- PROPOSED INDEX CONTOUR
- LOT LINE
- CENTERLINE
- RIGHT-OF-WAY
- EXTENDED STEM WALL SEE ARCH PLANS FOR DETAILS
- PROPOSED ROCK FACE WALL
- EXISTING CURB AND GUTTER
- PROPOSED EDGE OF CONCRETE
- PROPOSED FLOWLINE
- EXISITNG WALL

I DAVID SOULE, HAVE PERSONALLY INSPECTED THE PROPERTY ON X-XX-13. NO EARTHWORK HAS BEEN PERFORMED AND THE SITE IS CONSISTENT WITH THE TOPO SHOWN.

DAVID SOULE P.E. #14522 DATE

CAUTION:

EXISTING UTILITIES ARE NOT SHOWN. IT SHALL BE THE SOLE RESPONSIBILITY OF THE CONTRACTOR TO CONDUCT ALL NECESSARY FIELD INVESTIGATIONS PRIOR TO ANY EXCAVATION TO DETERMINE THE ACTUAL LOCATION OF UTILITIES & OTHER IMPROVEMENTS.

SCALE: 1"=20'

ENGINEER'S SEAL DAVID SOULE NEW MEXICO 14522 PROFESSIONAL ENGINEER 3/17/15 DAVID SOULE P.E. #14522	Safoa & Starbuc GRADING AND DRAINAGE PLAN Rio Grande Engineering	DRAWN BY DGM DATE 9-14 SHEET # 1 of 1 JOB # 10000X

(Provide larger Geotech map.)

Weighted E Method

BASIN B

Existing Developed Basins

											100-Year, 6-hr.		
Basin	Area (sf)	Area (acres)	Treatment A %	Treatment A (acres)	Treatment B %	Treatment B (acres)	Treatment C %	Treatment C (acres)	Treatment D %	Treatment D (acres)	Weighted E (ac-ft)	Volume (ac-ft)	Flow cfs
BASIN A .	52473	1.205	0%	0	10.0%	0.120	5.0%	0.06023	82%	0.988	2.346	0.235	5.76
BASIN B	20564	0.472	0%	0	6.0%	0.028	5.0%	0.0236	89%	0.420	2.487	0.098	2.38
BASIN C	13388	0.307	0%	0	14.0%	0.043	10.0%	0.03073	76%	0.234	2.304	0.059	1.47
BASIN D	29585	0.679	0%	0	8.0%	0.054	5.0%	0.03396	87%	0.591	2.456	0.139	3.39
BASIN E	11480	0.264	0%	0	10.0%	0.026	5.0%	0.01318	85%	0.224	2.425	0.053	1.30
DRAINS TO ROW	4811	0.110	0%	0	10.0%	0.011	10.0%	0.01104	80%	0.088	0.410	0.004	0.10
TOTAL ONSITE	132301	3.037	0%		9.3%	0.284	5.7%	0.173	84%	2.545		0.588	14.39
ALLOWED				0.000		0.092		0.037		0.568		-0.138	4.7CFS

Equations:

Weighted E = Ea*Aa + Eb*Ab + Ec*Ac + Ed*Ad / (Total Area)

Volume = Weighted D * Total Area

132301

Flow = Qa * Aa + Qb * Ab + Qc * Ac + Qd * Ad 127490

4811

Where for 100-year, 6-hour storm (zone 4)

Ea= 0.8	Qa= 2.2
Eb= 1.08	Qb= 2.92
Ec= 1.46	Qc= 3.73
Ed= 2.64	Qd= 5.25

water harvet volume 3140.76

provided 1810.00 infiltrator → label on plan.

2601 pond → Σ well pond volumes.

4411.00 total

Channel Capacity

(SW Culvert on

	Top Width	Bottom Width	Depth	Area	WP	R	Slope	Q Provided	Q Required	Velocity
	(ft)	(ft)	(ft)	(ft^2)	(ft)		(%)	(cfs)	(cfs)	(ft/s)
Beginning	2	2	0.5	1.00	3.00	0.3333333	2	3.38	1.30	1.30

<u>Manning's Equation:</u>

Q = 1.49/n * A * R^(2/3) * S^(1/2)

A = Area

R = D/4

S = Slope

n = 0.03

Pipe Capacity - where?

Pipe	D	Slope	Area	R	Q Provided	Q Required	Velocity
	(in)	(%)	(ft^2)		(cfs)	(cfs)	(ft/s)
6	6	4	0.20	0.125	1.13	0.65	3.31

<u>Manning's Equation:</u>

Q = 1.49/n * A * R^(2/3) * S^(1/2)

A = Area
R = D/4
S = Slope
n = 0.013

DROP INLET CALCULATIONS

INLET	TYPE OF INLET	AREA (SF)	Q (CFS)	H (FT)	H ALLOW (FT)
B	SINGLE C	3.84	9.61	0.2701	0.5
D	SINGLE C	3.84	4.69	0.0643	0.5

ORIFICE EQUATION

Q = CA sqrt(2gH)

C = 0.6

g = 32.2

single "D" inlet

show flow on plan.

INLET B=BASIN A+B+C= 9.61 CFS

INLET D=BASIN D+E= 4.69

SINCE THERE IS OVERFLOW NO CLOGING FACTOR

APPENDIX B

AHYMO

VOLUME CALCULATIONS

FOR STORM CHAMBER

(BASIS FOR AHYMO)

ACTUAL ELEV.	DEPTH (FT)	VOLUME (AC-FT)	Q (CFS)
39	1	0.08489	1.68
40	2	0.129	2.71
41	3	0.169	3.45
42	4	0.201	4.05
43	5	0.215	4.58
43.5	5.5	0.231	4.82
44	6	0.244	5.05
45	7	0.248	5.48
45.5	7.5	0.252	5.68

what do these refer to?

<u>Orifice Equation</u>

Q = CA SQRT(2gH)

C = 0.6

Diameter (in) 9

Area (ft^2)= 0.44178647 7

g = 32.2

H (Ft) = Depth of water above center of orifice

Q (CFS)= Flow

```
*S      AHYMO - safcu
*S              POND ROUTING

START                 TIME=0.0  PUNCH CODE=0


RAINFALL              TYPE=1
                      QUARTER=0.0    ONE= 2.20 IN
                      SIX= 2.90 IN   DAY= 3.70 IN   DT = 0.05 HR


COMPUTE NM HYD        ID=1  HYD NO=101  DA= .00468 SQ MI
                      PER A=00  PER B=12  PER C=6  PER D=82
                      TP=-.135  MASSRAIN=-1


PRINT HYD             ID=1  CODE=20


* ROUTE THE TOTAL FLOW THROUGH THE PROPOSED RESERVOIR
ROUTE RESERVOIR       ID=2   HYD NO=102   INFLOW=1   CODE=20
                      OUTFLOW(CFS)    STORAGE(AC-FT)    ELEV(FT)

                            1.68            0.085         39.00
                            2.71            0.129         40.00
                            3.45            0.169         41.00
                            4.05            0.201         42.00
                            4.58            0.214         43.00
                            4.82            0.231         43.50
                            5.05            0.244         44.00
                            5.48            0.248         45.00
                            5.68            0.252         45.50


PRINT HYD             ID=2   CODE=20


FINISH
```

```
        AHYMO PROGRAM (AHYMO-S4)                        - Version: S4.01a - Rel: 01a
             RUN DATE (MON/DAY/YR) = 05/29/2015
             START TIME (HR:MIN:SEC) = 11:29:20     USER NO.=
RioGrandeSingleA41963517
             INPUT FILE = ts and
Settings\Owner\Desktop\2014jobs\1498-11301MONTGOMERY\PONROUTING052715.txt

    *S      AHYMO - safcu
    *S              POND ROUTING

    START                TIME=0.0  PUNCH CODE=0

    RAINFALL             TYPE=1
                         QUARTER=0.0    ONE= 2.20 IN
                         SIX= 2.90 IN   DAY= 3.70 IN   DT = 0.05 HR


                    6-HOUR RAINFALL DIST. - BASED ON NOAA ATLAS 14 FOR CONVECTIVE
AREAS (NM & AZ) - D1
                    DT =   0.050000 HOURS       END TIME =     6.000000 HOURS
                      0.0000  0.0047  0.0095  0.0146  0.0201  0.0259  0.0323
                      0.0415  0.0561  0.0718  0.0881  0.1056  0.1235  0.1418
                      0.1608  0.1800  0.2012  0.2234  0.2472  0.2763  0.3081
                      0.3508  0.3991  0.4587  0.5383  0.6279  0.7825  1.0229
                      1.4348  1.7243  1.9526  2.0673  2.1679  2.2402  2.2976
                      2.3477  2.3844  2.4181  2.4459  2.4701  2.4926  2.5127
                      2.5318  2.5487  2.5648  2.5804  2.5955  2.6079  2.6148
                      2.6216  2.6284  2.6346  2.6409  2.6469  2.6529  2.6588
                      2.6644  2.6699  2.6753  2.6806  2.6859  2.6909  2.6958
                      2.7007  2.7055  2.7103  2.7148  2.7194  2.7238  2.7282
                      2.7325  2.7368  2.7410  2.7452  2.7493  2.7534  2.7574
                      2.7614  2.7654  2.7692  2.7731  2.7769  2.7807  2.7844
                      2.7881  2.7917  2.7953  2.7989  2.8024  2.8059  2.8094
                      2.8128  2.8162  2.8196  2.8229  2.8262  2.8295  2.8327
                      2.8359  2.8391  2.8422  2.8453  2.8484  2.8515  2.8546
                      2.8576  2.8606  2.8635  2.8665  2.8694  2.8723  2.8751
                      2.8780  2.8808  2.8836  2.8864  2.8892  2.8919  2.8946
                      2.8973  2.9000

    COMPUTE NM HYD       ID=1  HYD NO=101  DA= .00468 SQ MI
                         PER A=00  PER B=12  PER C=6  PER D=82
                         TP=-.135  MASSRAIN=-1


        K =  0.073575HR    TP =  0.135000HR    K/TP RATIO =  0.545000     SHAPE
CONSTANT, N =  7.106428
        UNIT PEAK =   14.960    CFS   UNIT VOLUME =   0.9982       B =   526.28
 P60 = 2.2000
        AREA =     0.003838 SQ MI    IA =   0.10000 INCHES    INF =   0.04000
INCHES PER HOUR
        RUNOFF COMPUTED BY INITIAL ABSTRACTION/INFILTRATION NUMBER METHOD - DT =
0.050000


        K =  0.127725HR    TP =  0.135000HR    K/TP RATIO =  0.946108     SHAPE
CONSTANT, N =  3.736321
```

UNIT PEAK = 2.1041 CFS UNIT VOLUME = 0.9953 B = 337.19
P60 = 2.2000
AREA = 0.000842 SQ MI IA = 0.45000 INCHES INF = 1.11000
INCHES PER HOUR
RUNOFF COMPUTED BY INITIAL ABSTRACTION/INFILTRATION NUMBER METHOD - DT =
0.050000

PRINT HYD ID=1 CODE=20

PARTIAL HYDROGRAPH 101.00

TIME HRS	FLOW CFS	TIME HRS	FLOW CFS	TIME HRS	FLOW CFS
0.000	0.0	2.000	2.2	4.000	0.1
6.000	0.1				
1.000	1.0	3.000	0.2	5.000	0.1

RUNOFF VOLUME = 2.38959 INCHES = 0.5964 ACRE-FEET
PEAK DISCHARGE RATE = 14.67 CFS AT 1.500 HOURS BASIN AREA =
0.0047 SQ. MI.

0 0 38.00

* ROUTE THE TOTAL FLOW THROUGH THE PROPOSED RESERVOIR
ROUTE RESERVOIR ID=2 HYD NO=102 INFLOW=1 CODE=20

How are these derived?

OUTFLOW(CFS)	STORAGE(AC-FT)	ELEV(FT)
1.68	0.085	39.00
2.71	0.129	40.00
3.45	0.169	41.00
4.05	0.201	42.00
4.58	0.214	43.00
4.82	0.231	43.50
5.05	0.244	44.00
5.48	0.248	45.00
5.68	0.252	45.50

39 vs. 37.5.

* * * * * * * * * * * * * * * * *

TIME (HRS)	INFLOW (CFS)	ELEV (FEET)	VOLUME (AC-FT)	OUTFLOW (CFS)
0.00	0.00	37.37	0.013	0.00
1.00	1.04	39.00	0.085	1.68
2.00	2.18	43.06	0.216	4.61
3.00	0.20	39.00	0.085	1.68
4.00	0.13	39.00	0.085	1.68
5.00	0.12	39.00	0.085	1.68
6.00	0.13	39.00	0.085	1.68
7.00	0.00	39.00	0.085	1.68
8.00	0.00	39.00	0.085	1.68
9.00	0.00	39.00	0.085	1.68
10.00	0.00	39.00	0.085	1.68
11.00	0.00	39.00	0.085	1.68
12.00	0.00	39.00	0.085	1.68
13.00	0.00	39.00	0.085	1.68
14.00	0.00	39.00	0.085	1.68

) 10 min increments.

15.00	0.00	39.00	0.085	1.68
16.00	0.00	39.00	0.085	1.68
17.00	0.00	39.00	0.085	1.68
18.00	0.00	39.00	0.085	1.68
19.00	0.00	39.00	0.085	1.68
20.00	0.00	39.00	0.085	1.68
21.00	0.00	39.00	0.085	1.68
22.00	0.00	39.00	0.085	1.68
23.00	0.00	39.00	0.085	1.68
24.00	0.00	39.00	0.085	1.68
25.00	0.00	39.00	0.085	1.68
26.00	0.00	39.00	0.085	1.68
27.00	0.00	39.00	0.085	1.68
28.00	0.00	39.00	0.085	1.68
29.00	0.00	39.00	0.085	1.68
30.00	0.00	39.00	0.085	1.68
31.00	0.00	39.00	0.085	1.68
32.00	0.00	39.00	0.085	1.68
33.00	0.00	39.00	0.085	1.68
34.00	0.00	39.00	0.085	1.68
35.00	0.00	39.00	0.085	1.68
36.00	0.00	39.00	0.085	1.68
37.00	0.00	39.00	0.085	1.68
38.00	0.00	39.00	0.085	1.68
39.00	0.00	39.00	0.085	1.68
40.00	0.00	39.00	0.085	1.68
41.00	0.00	39.00	0.085	1.68
42.00	0.00	39.00	0.085	1.68
43.00	0.00	39.00	0.085	1.68
44.00	0.00	39.00	0.085	1.68
45.00	0.00	39.00	0.085	1.68
46.00	0.00	39.00	0.085	1.68
47.00	0.00	39.00	0.085	1.68
48.00	0.00	39.00	0.085	1.68
49.00	0.00	39.00	0.085	1.68
50.00	0.00	39.00	0.085	1.68
51.00	0.00	39.00	0.085	1.68
52.00	0.00	39.00	0.085	1.68
53.00	0.00	39.00	0.085	1.68
54.00	0.00	39.00	0.085	1.68
55.00	0.00	39.00	0.085	1.68

TIME (HRS)	INFLOW (CFS)	ELEV (FEET)	VOLUME (AC-FT)	OUTFLOW (CFS)
56.00	0.00	39.00	0.085	1.68
57.00	0.00	39.00	0.085	1.68
58.00	0.00	39.00	0.085	1.68
59.00	0.00	39.00	0.085	1.68
60.00	0.00	39.00	0.085	1.68
61.00	0.00	39.00	0.085	1.68
62.00	0.00	39.00	0.085	1.68
63.00	0.00	39.00	0.085	1.68
64.00	0.00	39.00	0.085	1.68
65.00	0.00	39.00	0.085	1.68
66.00	0.00	39.00	0.085	1.68
67.00	0.00	39.00	0.085	1.68
68.00	0.00	39.00	0.085	1.68
69.00	0.00	39.00	0.085	1.68
70.00	0.00	39.00	0.085	1.68
71.00	0.00	39.00	0.085	1.68
72.00	0.00	39.00	0.085	1.68
73.00	0.00	39.00	0.085	1.68

74.00	0.00	39.00	0.085	1.68
75.00	0.00	39.00	0.085	1.68
76.00	0.00	39.00	0.085	1.68
77.00	0.00	39.00	0.085	1.68
78.00	0.00	39.00	0.085	1.68
79.00	0.00	39.00	0.085	1.68
80.00	0.00	39.00	0.085	1.68
81.00	0.00	39.00	0.085	1.68
82.00	0.00	39.00	0.085	1.68
83.00	0.00	39.00	0.085	1.68
84.00	0.00	39.00	0.085	1.68
85.00	0.00	39.00	0.085	1.68
86.00	0.00	39.00	0.085	1.68
87.00	0.00	39.00	0.085	1.68
88.00	0.00	39.00	0.085	1.68
89.00	0.00	39.00	0.085	1.68
90.00	0.00	39.00	0.085	1.68
91.00	0.00	39.00	0.085	1.68
92.00	0.00	39.00	0.085	1.68
93.00	0.00	39.00	0.085	1.68
94.00	0.00	39.00	0.085	1.68
95.00	0.00	39.00	0.085	1.68
96.00	0.00	39.00	0.085	1.68
97.00	0.00	39.00	0.085	1.68
98.00	0.00	39.00	0.085	1.68
99.00	0.00	39.00	0.085	1.68
100.00	0.00	39.00	0.085	1.68
101.00	0.00	39.00	0.085	1.68
102.00	0.00	39.00	0.085	1.68
103.00	0.00	39.00	0.085	1.68
104.00	0.00	39.00	0.085	1.68
105.00	0.00	39.00	0.085	1.68
106.00	0.00	39.00	0.085	1.68
107.00	0.00	39.00	0.085	1.68
108.00	0.00	39.00	0.085	1.68
109.00	0.00	39.00	0.085	1.68
110.00	0.00	39.00	0.085	1.68
111.00	0.00	39.00	0.085	1.68

TIME (HRS)	INFLOW (CFS)	ELEV (FEET)	VOLUME (AC-FT)	OUTFLOW (CFS)
112.00	0.00	39.00	0.085	1.68
113.00	0.00	39.00	0.085	1.68
114.00	0.00	39.00	0.085	1.68
115.00	0.00	39.00	0.085	1.68
116.00	0.00	39.00	0.085	1.68
117.00	0.00	39.00	0.085	1.68
118.00	0.00	39.00	0.085	1.68
119.00	0.00	39.00	0.085	1.68
120.00	0.00	39.00	0.085	1.68
121.00	0.00	39.00	0.085	1.68
122.00	0.00	39.00	0.085	1.68
123.00	0.00	39.00	0.085	1.68
124.00	0.00	39.00	0.085	1.68
125.00	0.00	39.00	0.085	1.68
126.00	0.00	39.00	0.085	1.68
127.00	0.00	39.00	0.085	1.68
128.00	0.00	39.00	0.085	1.68
129.00	0.00	39.00	0.085	1.68
130.00	0.00	39.00	0.085	1.68
131.00	0.00	39.00	0.085	1.68
132.00	0.00	39.00	0.085	1.68

133.00	0.00	39.00	0.085	1.68
134.00	0.00	39.00	0.085	1.68
135.00	0.00	39.00	0.085	1.68
136.00	0.00	39.00	0.085	1.68
137.00	0.00	39.00	0.085	1.68
138.00	0.00	39.00	0.085	1.68
139.00	0.00	39.00	0.085	1.68
140.00	0.00	39.00	0.085	1.68
141.00	0.00	39.00	0.085	1.68
142.00	0.00	39.00	0.085	1.68
143.00	0.00	39.00	0.085	1.68
144.00	0.00	39.00	0.085	1.68
145.00	0.00	39.00	0.085	1.68
146.00	0.00	39.00	0.085	1.68
147.00	0.00	39.00	0.085	1.68
148.00	0.00	39.00	0.085	1.68
149.00	0.00	39.00	0.085	1.68
150.00	0.00	39.00	0.085	1.68
151.00	0.00	39.00	0.085	1.68
152.00	0.00	39.00	0.085	1.68
153.00	0.00	39.00	0.085	1.68
154.00	0.00	39.00	0.085	1.68
155.00	0.00	39.00	0.085	1.68
156.00	0.00	39.00	0.085	1.68
157.00	0.00	39.00	0.085	1.68
158.00	0.00	39.00	0.085	1.68
159.00	0.00	39.00	0.085	1.68
160.00	0.00	39.00	0.085	1.68
161.00	0.00	39.00	0.085	1.68
162.00	0.00	39.00	0.085	1.68
163.00	0.00	39.00	0.085	1.68
164.00	0.00	39.00	0.085	1.68
165.00	0.00	39.00	0.085	1.68
166.00	0.00	39.00	0.085	1.68
167.00	0.00	39.00	0.085	1.68

TIME (HRS)	INFLOW (CFS)	ELEV (FEET)	VOLUME (AC-FT)	OUTFLOW (CFS)
168.00	0.00	39.00	0.085	1.68
169.00	0.00	39.00	0.085	1.68
170.00	0.00	39.00	0.085	1.68
171.00	0.00	39.00	0.085	1.68
172.00	0.00	39.00	0.085	1.68
173.00	0.00	39.00	0.085	1.68
174.00	0.00	39.00	0.085	1.68
175.00	0.00	39.00	0.085	1.68
176.00	0.00	39.00	0.085	1.68
177.00	0.00	39.00	0.085	1.68
178.00	0.00	39.00	0.085	1.68
179.00	0.00	39.00	0.085	1.68
180.00	0.00	39.00	0.085	1.68
181.00	0.00	39.00	0.085	1.68
182.00	0.00	39.00	0.085	1.68
183.00	0.00	39.00	0.085	1.68
184.00	0.00	39.00	0.085	1.68
185.00	0.00	39.00	0.085	1.68
186.00	0.00	39.00	0.085	1.68
187.00	0.00	39.00	0.085	1.68
188.00	0.00	39.00	0.085	1.68
189.00	0.00	39.00	0.085	1.68
190.00	0.00	39.00	0.085	1.68
191.00	0.00	39.00	0.085	1.68

192.00	0.00	39.00	0.085	1.68
193.00	0.00	39.00	0.085	1.68
194.00	0.00	39.00	0.085	1.68
195.00	0.00	39.00	0.085	1.68
196.00	0.00	39.00	0.085	1.68
197.00	0.00	39.00	0.085	1.68
198.00	0.00	39.00	0.085	1.68
199.00	0.00	39.00	0.085	1.68

PEAK DISCHARGE = 5.185 CFS - PEAK OCCURS AT HOUR 1.75
MAXIMUM WATER SURFACE ELEVATION = 44.314
MAXIMUM STORAGE = 0.2453 AC-FT INCREMENTAL TIME= 0.050000HRS

PRINT HYD ID=2 CODE=20

PARTIAL HYDROGRAPH 102.00

TIME HRS	FLOW CFS	TIME HRS	FLOW CFS	TIME HRS	FLOW CFS	TIME HRS	FLOW CFS
0.000	0.0	40.000	1.7	80.000	1.7	120.000	1.7
1.000	1.7	41.000	1.7	81.000	1.7	121.000	1.7
2.000	4.6	42.000	1.7	82.000	1.7	122.000	1.7
3.000	1.7	43.000	1.7	83.000	1.7	123.000	1.7
4.000	1.7	44.000	1.7	84.000	1.7	124.000	1.7
5.000	1.7	45.000	1.7	85.000	1.7	125.000	1.7
6.000	1.7	46.000	1.7	86.000	1.7	126.000	1.7
7.000	1.7	47.000	1.7	87.000	1.7	127.000	1.7
8.000	1.7	48.000	1.7	88.000	1.7	128.000	1.7
9.000	1.7	49.000	1.7	89.000	1.7	129.000	1.7
10.000	1.7	50.000	1.7	90.000	1.7	130.000	1.7
11.000	1.7	51.000	1.7	91.000	1.7	131.000	1.7
12.000	1.7	52.000	1.7	92.000	1.7	132.000	1.7
13.000	1.7	53.000	1.7	93.000	1.7	133.000	1.7
14.000	1.7	54.000	1.7	94.000	1.7	134.000	1.7
15.000	1.7	55.000	1.7	95.000	1.7	135.000	1.7
16.000	1.7	56.000	1.7	96.000	1.7	136.000	1.7
17.000	1.7	57.000	1.7	97.000	1.7	137.000	1.7
18.000	1.7	58.000	1.7	98.000	1.7	138.000	1.7
19.000	1.7	59.000	1.7	99.000	1.7	139.000	1.7
20.000	1.7	60.000	1.7	100.000	1.7	140.000	1.7
21.000	1.7	61.000	1.7	101.000	1.7		

```
141.000        1.7          181.000        1.7
        22.000        1.7          62.000        1.7          102.000        1.7
142.000        1.7          182.000        1.7
        23.000        1.7          63.000        1.7          103.000        1.7
143.000        1.7          183.000        1.7
        24.000        1.7          64.000        1.7          104.000        1.7
144.000        1.7          184.000        1.7
        25.000        1.7          65.000        1.7          105.000        1.7
145.000        1.7          185.000        1.7
        26.000        1.7          66.000        1.7          106.000        1.7
146.000        1.7          186.000        1.7
        27.000        1.7          67.000        1.7          107.000        1.7
147.000        1.7          187.000        1.7
        28.000        1.7          68.000        1.7          108.000        1.7
148.000        1.7          188.000        1.7
        29.000        1.7          69.000        1.7          109.000        1.7
149.000        1.7          189.000        1.7
        30.000        1.7          70.000        1.7          110.000        1.7
150.000        1.7          190.000        1.7
        31.000        1.7          71.000        1.7          111.000        1.7
151.000        1.7          191.000        1.7
        32.000        1.7          72.000        1.7          112.000        1.7
152.000        1.7          192.000        1.7
        33.000        1.7          73.000        1.7          113.000        1.7
153.000        1.7          193.000        1.7
        34.000        1.7          74.000        1.7          114.000        1.7
154.000        1.7          194.000        1.7
        35.000        1.7          75.000        1.7          115.000        1.7
155.000        1.7          195.000        1.7
        36.000        1.7          76.000        1.7          116.000        1.7
156.000        1.7          196.000        1.7
        37.000        1.7          77.000        1.7          117.000        1.7
157.000        1.7          197.000        1.7
        38.000        1.7          78.000        1.7          118.000        1.7
158.000        1.7          198.000        1.7
        39.000        1.7          79.000        1.7          119.000        1.7
159.000        1.7          199.000        1.7

        RUNOFF VOLUME =    112.04522 INCHES      =       27.9663 ACRE-FEET
        PEAK DISCHARGE RATE =       5.19 CFS  AT    1.750 HOURS   BASIN AREA =
0.0047 SQ. MI.


    FINISH

        NORMAL PROGRAM FINISH          END TIME (HR:MIN:SEC) = 11:29:20
```

APPENDIX C

ADS INFILTRATOR SPECIFICATIONS

PROJECT INFORMATION	
ENGINEERED PRODUCT MANAGER:	PEGGY GRAHAM 720-982-6303 PEGGY.GRAHAM@ADS-PIPE.COM
ADS SALES REP:	PETER NICHOLS 505-301-5604 PETER.NICHOLS@ADS-PIPE.COM
PROJECT NO:	94281 REV1

ADVANCED DRAINAGE SYSTEMS, INC.

SAFCA & STARBUCKS

ALBUQUERQUE, NM

STORMWATER CHAMBER SPECIFICATIONS

1. CHAMBERS SHALL BE STORMTECH MC-4500 OR APPROVED EQUAL.
2. CHAMBERS SHALL BE MANUFACTURED FROM VIRGIN, IMPACT-MODIFIED POLYPROPYLENE COPOLYMERS.
3. CHAMBER ROWS SHALL PROVIDE CONTINUOUS, UNOBSTRUCTED INTERNAL SPACE WITH NO INTERNAL SUPPORT PANELS THAT WOULD IMPEDE FLOW OR LIMIT ACCESS FOR INSPECTION.
4. THE STRUCTURAL DESIGN OF THE CHAMBERS, THE STRUCTURAL BACKFILL, AND THE INSTALLATION REQUIREMENTS SHALL ENSURE THAT THE LOAD FACTORS SPECIFIED IN THE AASHTO LRFD BRIDGE DESIGN SPECIFICATIONS, SECTION 12.12, ARE MET FOR: 1) LONG-DURATION DEAD LOADS AND 2) SHORT-DURATION LIVE LOADS, BASED ON THE AASHTO DESIGN TRUCK WITH CONSIDERATION FOR IMPACT AND MULTIPLE VEHICLE PRESENCES.
5. CHAMBERS SHALL MEET THE REQUIREMENTS OF ASTM F2418, "STANDARD SPECIFICATION FOR POLYPROPYLENE (PP) CORRUGATED WALL STORMWATER COLLECTION CHAMBERS".
6. CHAMBERS SHALL BE DESIGNED AND ALLOWABLE LOADS DETERMINED IN ACCORDANCE WITH ASTM F2787, "STANDARD PRACTICE FOR STRUCTURAL DESIGN OF THERMOPLASTIC CORRUGATED WALL STORMWATER COLLECTION CHAMBERS".
7. ONLY CHAMBERS THAT ARE APPROVED BY THE SITE DESIGN ENGINEER WILL BE ALLOWED. THE CHAMBER MANUFACTURER SHALL SUBMIT THE FOLLOWING UPON REQUEST TO THE SITE DESIGN ENGINEER FOR APPROVAL BEFORE DELIVERING CHAMBERS TO THE PROJECT SITE:
   a. A STRUCTURAL EVALUATION SEALED BY A REGISTERED PROFESSIONAL ENGINEER THAT DEMONSTRATES THAT THE SAFETY FACTORS ARE GREATER THAN OR EQUAL TO 1.95 FOR DEAD LOAD AND 1.75 FOR LIVE LOAD, THE MINIMUM REQUIRED BY ASTM F2787 AND BY AASHTO FOR THERMOPLASTIC PIPE.
   b. A STRUCTURAL EVALUATION SEALED BY A REGISTERED PROFESSIONAL ENGINEER THAT DEMONSTRATES THAT THE LOAD FACTORS SPECIFIED IN THE AASHTO LRFD BRIDGE DESIGN SPECIFICATIONS, SECTION 12.12, ARE MET. THE 50 YEAR CREEP MODULUS DATA SPECIFIED IN ASTM F2418 MUST BE USED AS PART OF THE AASHTO STRUCTURAL EVALUATION TO VERIFY LONG-TERM PERFORMANCE.
   c. STRUCTURAL CROSS SECTION DETAIL ON WHICH THE STRUCTURAL EVALUATION IS BASED.
8. CHAMBERS AND END CAPS SHALL BE PRODUCED AT AN ISO 9001 CERTIFIED MANUFACTURING FACILITY.

IMPORTANT - NOTES FOR THE BIDDING AND INSTALLATION OF MC-4500 CHAMBER SYSTEM

1. STORMTECH MC-4500 CHAMBERS SHALL NOT BE INSTALLED UNTIL THE MANUFACTURER'S REPRESENTITIVE HAS COMPLETED A PRE-CONSTRUCTION MEETING WITH THE INSTALLERS.
2. STORMTECH MC-4500 CHAMBERS SHALL BE INSTALLED IN ACCORDANCE WITH THE "STORMTECH MC-3500/MC-4500 CONSTRUCTION GUIDE".
3. CHAMBERS ARE NOT TO BE BACKFILLED WITH A DOZER OR EXCAVATOR SITUATED OVER THE CHAMBERS.

   STORMTECH RECOMMENDS 3 BACKFILL METHODS:
   - STONESHOOTER LOCATED OFF THE CHAMBER BED.
   - BACKFILL AS ROWS ARE BUILT USING AN EXCAVATOR ON THE FOUNDATION STONE OR SUBGRADE.
   - BACKFILL FROM OUTSIDE THE EXCAVATION USING A LONG BOOM HOE OR EXCAVATOR.
4. THE FOUNDATION STONE SHALL BE LEVELED AND COMPACTED PRIOR TO PLACING CHAMBERS.
5. JOINTS BETWEEN CHAMBERS SHALL BE PROPERLY SEATED PRIOR TO PLACING STONE.
6. MAINTAIN MINIMUM - 9" (230 mm) SPACING BETWEEN THE CHAMBER ROWS.
7. INLET AND OUTLET MANIFOLDS MUST BE INSERTED A MINIMUM OF 12" (300 mm) INTO CHAMBER END CAPS.
8. EMBEDMENT STONE SURROUNDING CHAMBERS MUST BE A CLEAN, CRUSHED, ANGULAR STONE 3/4-2" (20-50 mm) MEETING THE AASHTO M43 DESIGNATION OF #3 OR #4.
9. STONE SHALL BE BROUGHT UP EVENLY AROUND CHAMBERS SO AS NOT TO DISTORT THE CHAMBER SHAPE. STONE DEPTHS SHOULD NEVER DIFFER BY MORE THAN 12" (300 mm) BETWEEN ADJACENT CHAMBER ROWS.
10. STONE MUST BE PLACED ON THE TOP CENTER OF THE CHAMBER TO ANCHOR THE CHAMBERS IN PLACE AND PRESERVE ROW SPACING.
11. ADS RECOMMENDS THE USE OF "FLEXSTORM CATCH IT" INSERTS DURING CONSTRUCTION FOR ALL INLETS TO PROTECT THE SUBSURFACE STORMWATER MANAGEMENT SYSTEM FROM CONSTRUCTION SITE RUNOFF.

NOTES FOR CONSTRUCTION EQUIPMENT

1. STORMTECH MC-4500 CHAMBERS SHALL BE INSTALLED IN ACCORDANCE WITH THE "STORMTECH MC-3500/MC-4500 CONSTRUCTION GUIDE".
2. THE USE OF EQUIPMENT OVER MC-4500 CHAMBERS IS LIMITED:
   - NO EQUIPMENT IS ALLOWED ON BARE CHAMBERS.
   - NO RUBBER TIRED LOADER, DUMP TRUCK, OR EXCAVATORS ARE ALLOWED UNTIL PROPER FILL DEPTHS ARE REACHED IN ACCORDANCE WITH THE "STORMTECH MC-3500/MC-4500 CONSTRUCTION GUIDE".
   - WEIGHT LIMITS FOR CONSRUCTION EQUIPMENT CAN BE FOUND IN THE "STORMTECH MC-3500/MC-4500 CONSTRUCTION GUIDE".
3. FULL 36" (900 mm) OF STABILIZED COVER MATERIALS OVER THE CHAMBERS IS REQUIRED FOR DUMP TRUCK TRAVEL OR DUMPING.

USE OF A DOZER TO PUSH EMBEDMENT STONE BETWEEN THE ROWS OF CHAMBERS MAY CAUSE DAMAGE TO CHAMBERS AND IS NOT AN ACCEPTABLE BACKFILL METHOD. ANY CHAMBERS DAMAGED BY USING THE "DUMP AND PUSH" METHOD ARE NOT COVERED UNDER THE STORMTECH STANDARD WARRANTY.

CONTACT STORMTECH AT 1-888-892-2694 WITH ANY QUESTIONS ON INSTALLATION REQUIREMENTS OR WEIGHT LIMITS FOR CONSTRUCTION EQUIPMENT.

©2013 ADS, INC.

PROPOSED LAYOUT

(58) STORMTECH MC-4500 CHAMBERS
(6) STORMTECH MC-4500 END CAPS
INSTALLED WITH 12" COVER STONE, 9" BASE STONE, 30% STONE VOID
AREA OF SYSTEM: 2,741 FT²
PERIMETER OF SYSTEM: 551 FT

PROPOSED ELEVATIONS

MAXIMUM ALLOWABLE GRADE (TOP OF PAVEMENT/UNPAVED)	49.50
MINIMUM ALLOWABLE GRADE (UNPAVED WITH TRAFFIC):	45.00
MINIMUM ALLOWABLE GRADE (BASE OF FLEXIBLE PAVEMENT):	44.50
MINIMUM ALLOWABLE GRADE (TOP OF RIGID CONCRETE PAVEMENT):	44.50
TOP OF STONE:	43.50
TOP OF CHAMBER:	42.50
24" ISOLATOR ROW INVERT:	~~37.69~~
BOTTOM OF CHAMBER:	37.50
BOTTOM OF STONE:	36.75

show volume, # of chambers.
Line volume for one chamber.

NOTES

- MANIFOLD SIZE TO BE DETERMINED BY SITE DESIGN ENGINEER. SEE TECH SHEET #7 FOR MANIFOLD SIZING GUIDANCE.
- DUE TO THE ADAPTATION OF THIS CHAMBER SYSTEM TO SPECIFIC SITE AND DESIGN CONSTRAINTS, IT MAY BE NECESSARY TO CUT AND COUPLE ADDITIONAL PIPE TO STANDARD MANIFOLD COMPONENTS IN THE FIELD.
- THE SITE DESIGN ENGINEER MUST REVIEW ELEVATIONS AND IF NECESSARY ADJUST GRADING TO ENSURE THE CHAMBER COVER REQUIREMENTS ARE MET.

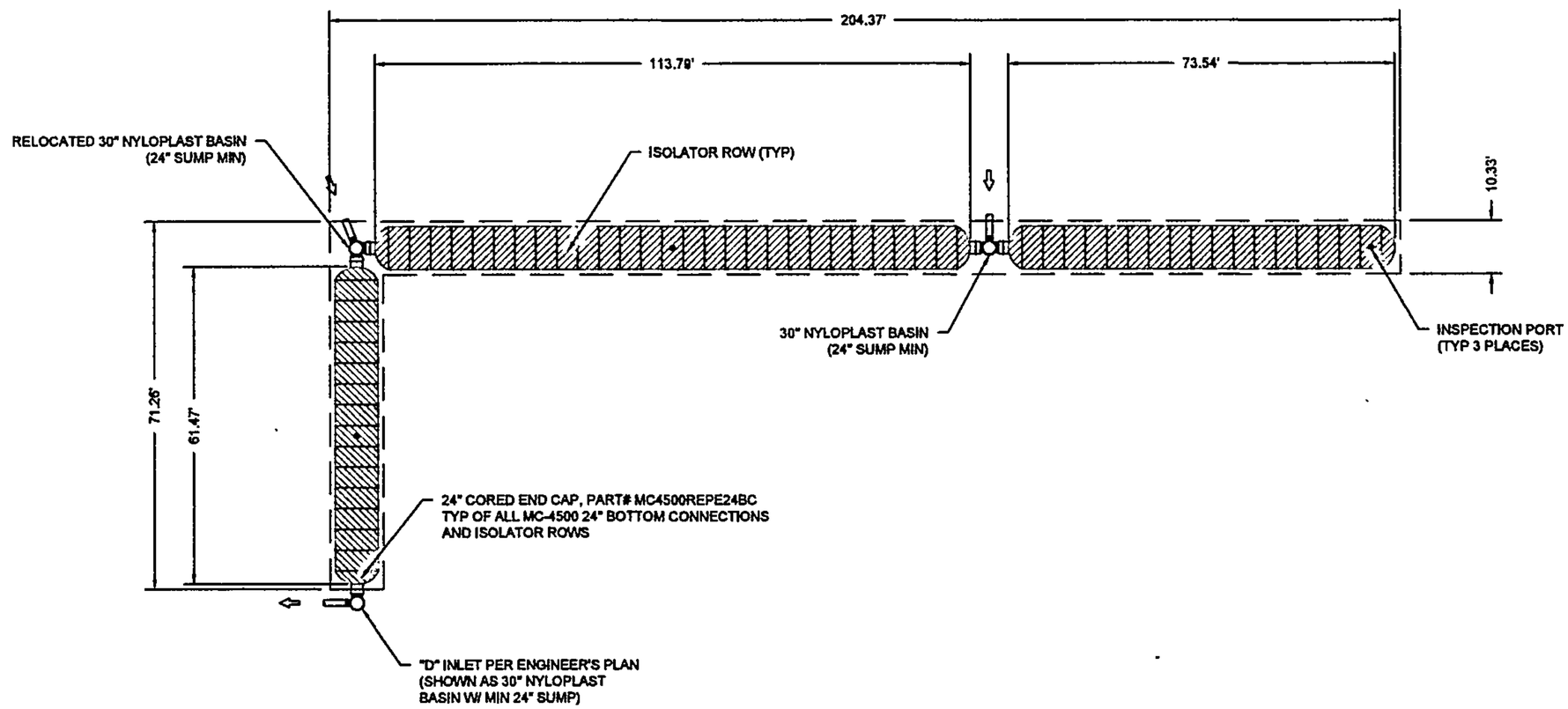

SAFCA & STARBUCKS
ALBUQUERQUE, NM

DATE: 3/31/15 | DRAWN: WCM
PROJECT #: 94281 | CHECKED: KAP

REV	DRW	CHK	DESCRIPTION
5/28/15	WCM	KMS	ADDED CHAMBERS / NEW ELEVATIONS

StormTech
Detention Retention Water Quality
70 INWOOD ROAD, SUITE 3 | ROCKY HILL | CT | 06067
800-428-8183 | 866-462-2864 | WWW.STORMTECH.COM

ADS
ADVANCED DRAINAGE SYSTEMS, INC.
4640 TRUEMAN BLVD
HILLIARD, OH 43026
1-800-733-7473

0 25' 50'

THIS DRAWING HAS BEEN PREPARED BASED ON INFORMATION PROVIDED TO ADS UNDER THE DIRECTION OF THE SITE DESIGN ENGINEER OR OTHER PROJECT REPRESENTATIVE. THE SITE DESIGN ENGINEER SHALL REVIEW THIS DRAWING PRIOR TO CONSTRUCTION. IT IS THE ULTIMATE RESPONSIBILITY OF THE SITE DESIGN ENGINEER TO ENSURE THAT THE PRODUCT(S) DEPICTED AND ALL ASSOCIATED DETAILS MEET ALL APPLICABLE LAWS, REGULATIONS, AND PROJECT REQUIREMENTS.

ACCEPTABLE FILL MATERIALS: STORMTECH MC-4500 CHAMBER SYSTEMS

MATERIAL LOCATION		DESCRIPTION	AASHTO MATERIAL CLASSIFICATIONS	COMPACTION / DENSITY REQUIREMENT
D	**FINAL FILL:** FILL MATERIAL FOR LAYER 'D' STARTS FROM THE TOP OF THE 'C' LAYER TO THE BOTTOM OF FLEXIBLE PAVEMENT OR UNPAVED FINISHED GRADE ABOVE. NOTE THAT PAVEMENT SUBBASE MAY BE PART OF THE 'D' LAYER	ANY SOIL/ROCK MATERIALS, NATIVE SOILS, OR PER ENGINEER'S PLANS. CHECK PLANS FOR PAVEMENT SUBGRADE REQUIREMENTS.	N/A	PREPARE PER SITE DESIGN ENGINEER'S PLANS. PAVED INSTALLATIONS MAY HAVE STRINGENT MATERIAL AND PREPARATION REQUIREMENTS.
C	**INITIAL FILL:** FILL MATERIAL FOR LAYER 'C' STARTS FROM THE TOP OF THE EMBEDMENT STONE ('B' LAYER) TO 24" (600 mm) ABOVE THE TOP OF THE CHAMBER. NOTE THAT PAVEMENT SUBBASE MAY BE A PART OF THE 'C' LAYER.	GRANULAR WELL-GRADED SOIL/AGGREGATE MIXTURES, <35% FINES OR PROCESSED AGGREGATE. MOST PAVEMENT SUBBASE MATERIALS CAN BE USED IN LIEU OF THIS LAYER.	AASHTO M145[1] A-1, A-2-4, A-3 OR AASHTO M43[1] 3, 357, 4, 467, 5, 56, 57, 6, 67, 68, 7, 78, 8, 89, 9, 10	BEGIN COMPACTIONS AFTER 24" (600 mm) OF MATERIAL OVER THE CHAMBERS IS REACHED. COMPACT ADDITIONAL LAYERS IN 12" (300 mm) MAX LIFTS TO A MIN. 95% PROCTOR DENSITY FOR WELL GRADED MATERIAL AND 95% RELATIVE DENSITY FOR PROCESSED AGGREGATE MATERIALS.
B	**EMBEDMENT STONE:** FILL SURROUNDING THE CHAMBERS FROM THE FOUNDATION STONE ('A' LAYER) TO THE 'C' LAYER ABOVE.	CLEAN, CRUSHED, ANGULAR STONE, NOMINAL SIZE DISTRIBUTION BETWEEN 3/4-2 INCH (20-50 mm)	AASHTO M43[1] 3, 4	NO COMPACTION REQUIRED.
A	**FOUNDATION STONE:** FILL BELOW CHAMBERS FROM THE SUBGRADE UP TO THE FOOT (BOTTOM) OF THE CHAMBER.	CLEAN, CRUSHED, ANGULAR STONE, NOMINAL SIZE DISTRIBUTION BETWEEN 3/4-2 INCH (20-50 mm)	AASHTO M43[1] 3, 4	PLATE COMPACT OR ROLL TO ACHIEVE A FLAT SURFACE.[2,3]

PLEASE NOTE:
1. THE LISTED AASHTO DESIGNATIONS ARE FOR GRADATIONS ONLY. THE STONE MUST ALSO BE CLEAN, CRUSHED, ANGULAR. FOR EXAMPLE, A SPECIFICATION FOR #4 STONE WOULD STATE: "CLEAN, CRUSHED, ANGULAR NO. 4 (AASHTO M43) STONE".
2. STORMTECH COMPACTION REQUIREMENTS ARE MET FOR 'A' LOCATION MATERIALS WHEN PLACED AND COMPACTED IN 9" (230 mm) (MAX) LIFTS USING TWO FULL COVERAGES WITH A VIBRATORY COMPACTOR.
3. WHERE INFILTRATION SURFACES MAY BE COMPROMISED BY COMPACTION, FOR STANDARD DESIGN LOAD CONDITIONS, A FLAT SURFACE MAY BE ACHIEVED BY RAKING OR DRAGGING WITHOUT COMPACTION EQUIPMENT. FOR SPECIAL LOAD DESIGNS, CONTACT STORMTECH FOR COMPACTION REQUIREMENTS.

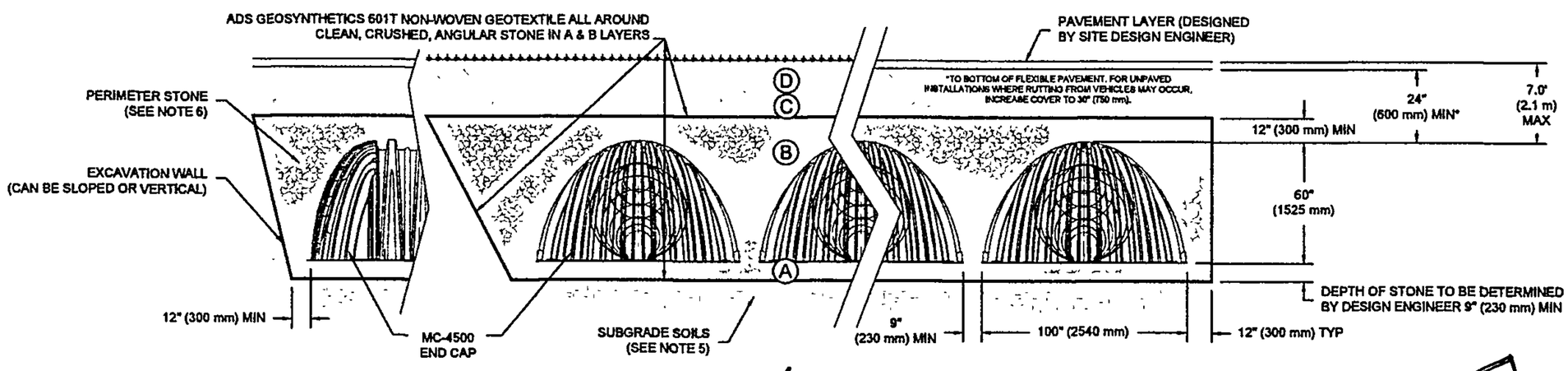

If there is one single chamber, show X-sec.

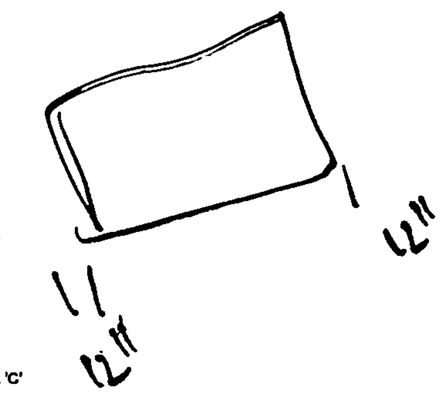

NOTES:

1. MC-4500 CHAMBERS SHALL CONFORM TO THE REQUIREMENTS OF ASTM F2418 "STANDARD SPECIFICATION FOR POLYPROPYLENE (PP) CORRUGATED WALL STORMWATER COLLECTION CHAMBERS".
2. MC-4500 CHAMBERS SHALL BE DESIGNED IN ACCORDANCE WITH ASTM F2787 "STANDARD PRACTICE FOR STRUCTURAL DESIGN OF THERMOPLASTIC CORRUGATED WALL STORMWATER COLLECTION CHAMBERS".
3. "ACCEPTABLE FILL MATERIALS" TABLE ABOVE PROVIDES MATERIAL LOCATIONS, DESCRIPTIONS, GRADATIONS, AND COMPACTION REQUIREMENTS FOR FOUNDATION, EMBEDMENT, AND FILL MATERIALS.
4. THE "SITE DESIGN ENGINEER" REFERS TO THE ENGINEER RESPONSIBLE FOR THE DESIGN AND LAYOUT OF THE STORMTECH CHAMBERS FOR THIS PROJECT.
5. THE SITE DESIGN ENGINEER IS RESPONSIBLE FOR ASSESSING THE BEARING RESISTANCE (ALLOWABLE BEARING CAPACITY) OF THE SUBGRADE SOILS AND THE DEPTH OF FOUNDATION STONE WITH CONSIDERATION FOR THE RANGE OF EXPECTED SOIL MOISTURE CONDITIONS.
6. PERIMETER STONE MUST BE EXTENDED HORIZONTALLY TO THE EXCAVATION WALL FOR BOTH VERTICAL AND SLOPED EXCAVATION WALLS.
7. ONCE LAYER 'C' IS PLACED, ANY SOIL/MATERIAL CAN BE PLACED IN LAYER 'D' UP TO THE FINISHED GRADE. MOST PAVEMENT SUBBASE SOILS CAN BE USED TO REPLACE THE MATERIAL REQUIREMENTS OF LAYER 'C' OR 'D' AT THE SITE DESIGN ENGINEER'S DISCRETION.

SAFCA & STARBUCKS
ALBUQUERQUE, NM

DATE: 3/31/15 | DRAWN: WCM

REV	DRW	CHK	DESCRIPTION
5/29/15	WCM	KMB	ADDED CHAMBERS / NEW ELEVATIONS

StormTech

ADS
4640 TRUEMAN BLVD
HILLIARD, OH 43026
1-800-733-7473

SHEET
3 OF

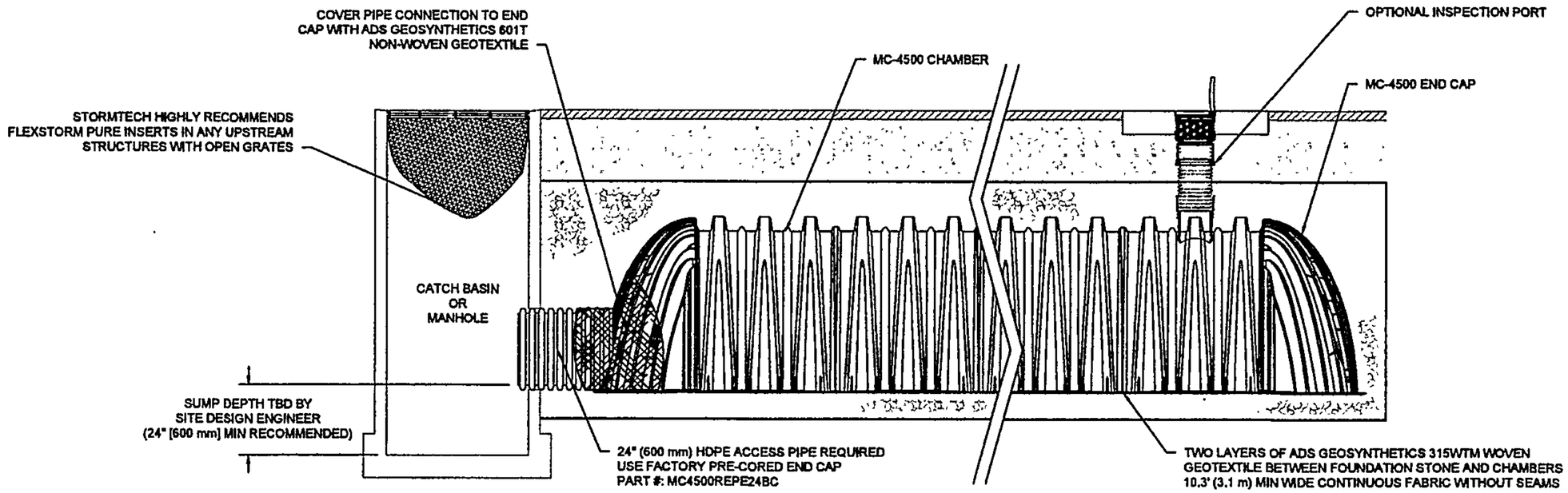

MC-4500 ISOLATOR ROW DETAIL
NTS

INSPECTION & MAINTENANCE

STEP 1) INSPECT ISOLATOR ROW FOR SEDIMENT
- A. INSPECTION PORTS (IF PRESENT)
  - A.1. REMOVE/OPEN LID ON NYLOPLAST INLINE DRAIN
  - A.2. REMOVE AND CLEAN FLEXSTORM FILTER IF INSTALLED
  - A.3. USING A FLASHLIGHT AND STADIA ROD, MEASURE DEPTH OF SEDIMENT AND RECORD ON MAINTENANCE LOG
  - A.4. LOWER A CAMERA INTO ISOLATOR ROW FOR VISUAL INSPECTION OF SEDIMENT LEVELS (OPTIONAL)
  - A.5. IF SEDIMENT IS AT, OR ABOVE, 3" (80 mm) PROCEED TO STEP 2. IF NOT, PROCEED TO STEP 3.
- B. ALL ISOLATOR ROWS
  - B.1. REMOVE COVER FROM STRUCTURE AT UPSTREAM END OF ISOLATOR ROW
  - B.2. USING A FLASHLIGHT, INSPECT DOWN THE ISOLATOR ROW THROUGH OUTLET PIPE
    - i) MIRRORS ON POLES OR CAMERAS MAY BE USED TO AVOID A CONFINED SPACE ENTRY
    - ii) FOLLOW OSHA REGULATIONS FOR CONFINED SPACE ENTRY IF ENTERING MANHOLE
  - B.3. IF SEDIMENT IS AT, OR ABOVE, 3" (80 mm) PROCEED TO STEP 2. IF NOT, PROCEED TO STEP 3.

STEP 2) CLEAN OUT ISOLATOR ROW USING THE JETVAC PROCESS
- A. A FIXED CULVERT CLEANING NOZZLE WITH REAR FACING SPREAD OF 45" (1.1 m) OR MORE IS PREFERRED
- B. APPLY MULTIPLE PASSES OF JETVAC UNTIL BACKFLUSH WATER IS CLEAN
- C. VACUUM STRUCTURE SUMP AS REQUIRED

STEP 3) REPLACE ALL COVERS, GRATES, FILTERS, AND LIDS; RECORD OBSERVATIONS AND ACTIONS.

STEP 4) INSPECT AND CLEAN BASINS AND MANHOLES UPSTREAM OF THE STORMTECH SYSTEM.

NOTES

1. INSPECT EVERY 6 MONTHS DURING THE FIRST YEAR OF OPERATION. ADJUST THE INSPECTION INTERVAL BASED ON PREVIOUS OBSERVATIONS OF SEDIMENT ACCUMULATION AND HIGH WATER ELEVATIONS.
2. CONDUCT JETTING AND VACTORING ANNUALLY OR WHEN INSPECTION SHOWS THAT MAINTENANCE IS NECESSARY.

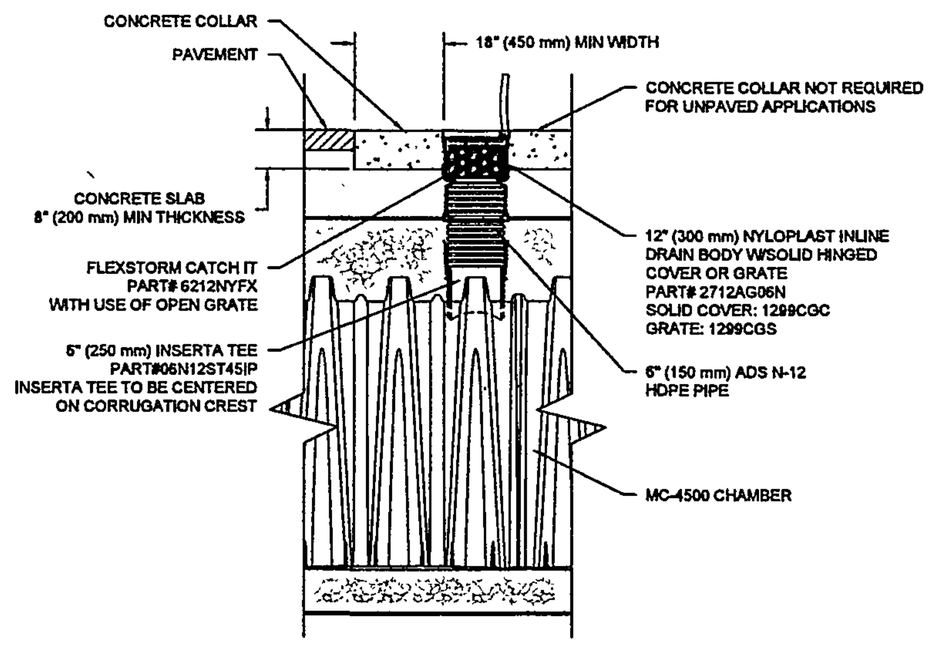

MC-4500 6" INSPECTION PORT DETAIL
NTS

SAFCA & STARBUCKS
ALBUQUERQUE, NM

DATE: 3/31/15 | DRAWN: WCM
PROJECT #: 94281 | CHECKED: KAP

REV	DRW	CHK	DESCRIPTION
5/28/15	WCM	KMS	ADDED CHAMBERS / NEW ELEVATIONS

StormTech
Detention · Retention · Water Quality
70 INWOOD ROAD, SUITE 3 | ROCKY HILL | CT | 06067
860-529-8188 | 888-892-2694 | WWW.STORMTECH.COM

ADS
ADVANCED DRAINAGE SYSTEMS, INC.
4640 TRUEMAN BLVD
HILLIARD, OH 43026
1-800-733-7473

THIS DRAWING HAS BEEN PREPARED BASED ON INFORMATION PROVIDED TO ADS UNDER THE DIRECTION OF THE SITE DESIGN ENGINEER OR OTHER PROJECT REPRESENTATIVE. THE SITE DESIGN ENGINEER SHALL REVIEW THIS DRAWING PRIOR TO CONSTRUCTION. IT IS THE ULTIMATE RESPONSIBILITY OF THE SITE DESIGN ENGINEER TO ENSURE THAT THE PRODUCT(S) DEPICTED AND ALL ASSOCIATED DETAILS MEET ALL APPLICABLE LAWS, REGULATIONS, AND PROJECT REQUIREMENTS.

MC-4500 TECHNICAL SPECIFICATION

NTS

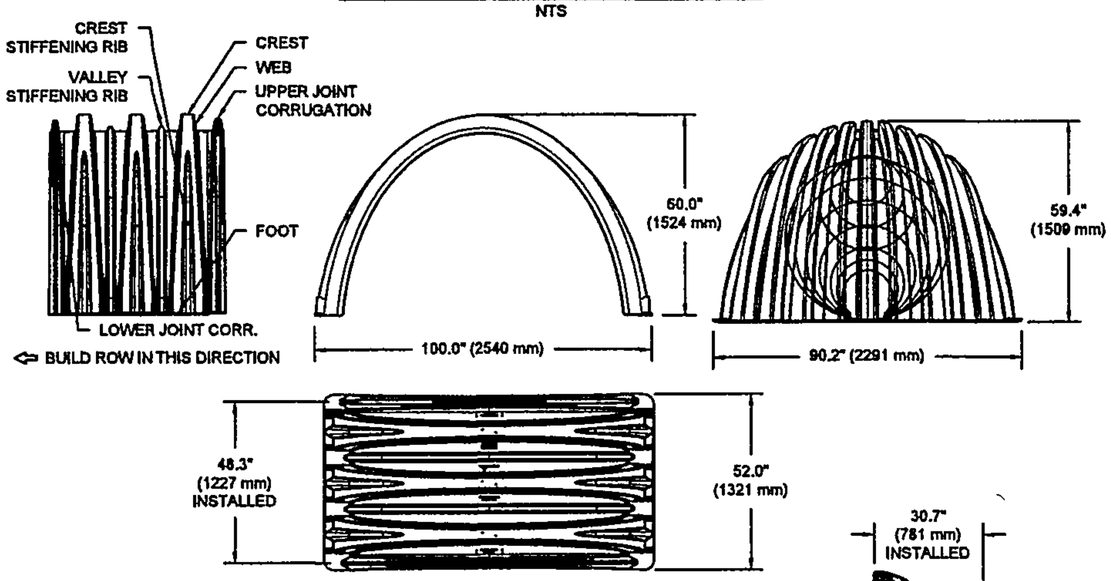

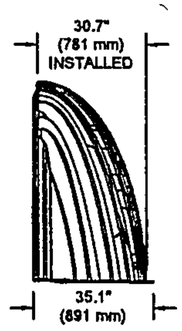

NOMINAL CHAMBER SPECIFICATIONS

SIZE (W X H X INSTALLED LENGTH)	100.0" X 60.0" X 48.3"	(2540 mm X 1524 mm X 1227 mm)
CHAMBER STORAGE	106.5 CUBIC FEET	(3.01 m³)
MINIMUM INSTALLED STORAGE*	162.6 CUBIC FEET	(4.60 m³)
WEIGHT	130.0 lbs.	(59.0 kg)

NOMINAL END CAP SPECIFICATIONS

SIZE (W X H X INSTALLED LENGTH)	90.2" X 59.4" X 30.7"	(2291 mm X 1509 mm X 781 mm)
END CAP STORAGE	35.7 CUBIC FEET	(1.01 m³)
MINIMUM INSTALLED STORAGE*	108.7 CUBIC FEET	(3.08 m³)
WEIGHT	135.0 lbs.	(61.2 kg)

*ASSUMES 12" (305 mm) STONE ABOVE, 9" (229 mm) STONE FOUNDATION AND BETWEEN CHAMBERS, 12" (305 mm) STONE PERIMETER IN FRONT OF END CAPS AND 40% STONE POROSITY.

STUBS AT BOTTOM OF END CAP FOR PART NUMBERS ENDING WITH "B"
STUBS AT TOP OF END CAP FOR PART NUMBERS ENDING WITH "T"

PART #	STUB	B	C
MC4500REPE06T	6" (150 mm)	42.54" (1.081 m)	—
MC4500REPE06B		—	0.86" (22 mm)
MC4500REPE08T	8" (200 mm)	40.50" (1.029 m)	—
MC4500REPE08B		—	1.01" (26 mm)
MC4500REPE10T	10" (250 mm)	38.37" (975 mm)	—
MC4500REPE10B		—	1.33" (34 mm)
MC4500REPE12T	12" (300 mm)	35.69" (907 mm)	—
MC4500REPE12B		—	1.55" (39 mm)
MC4500REPE15T	15" (375 mm)	32.72" (831 mm)	—
MC4500REPE15B		—	1.70" (43 mm)
MC4500REPE18TC	18" (450 mm)	29.36" (746 mm)	—
MC4500REPE18BC		—	1.97" (50 mm)
MC4500REPE24TC	24" (600 mm)	23.05" (585 mm)	—
MC4500REPE24BC		—	2.25" (57 mm)
MC4500REPE30BC	30" (750 mm)	—	2.95" (75 mm)
MC4500REPE36BC	36" (900 mm)	—	3.25" (83 mm)
MC4500REPE42BC	42" (1050 mm)	—	3.55" (90 mm)

NOTE: ALL DIMENSIONS ARE NOMINAL

CUSTOM PRECORED INVERTS ARE AVAILABLE UPON REQUEST. INVENTORIED MANIFOLDS INCLUDE 12-24" (300-600 mm) SIZE ON SIZE AND 15-48" (375-1200 mm) ECCENTRIC MANIFOLDS.
CUSTOM INVERT LOCATIONS ON THE MC-4500 END CAP CUT IN THE FIELD ARE NOT RECOMMENDED FOR PIPE SIZES GREATER THAN 10" (250 mm)
THE INVERT LOCATION IN COLUMN 'B' ARE THE HIGHTEST POSSIBLE FOR THE PIPE SIZE.

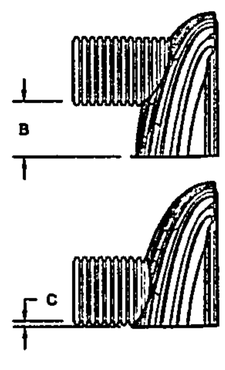

MC-SERIES END CAP INSERTION DETAIL

NTS

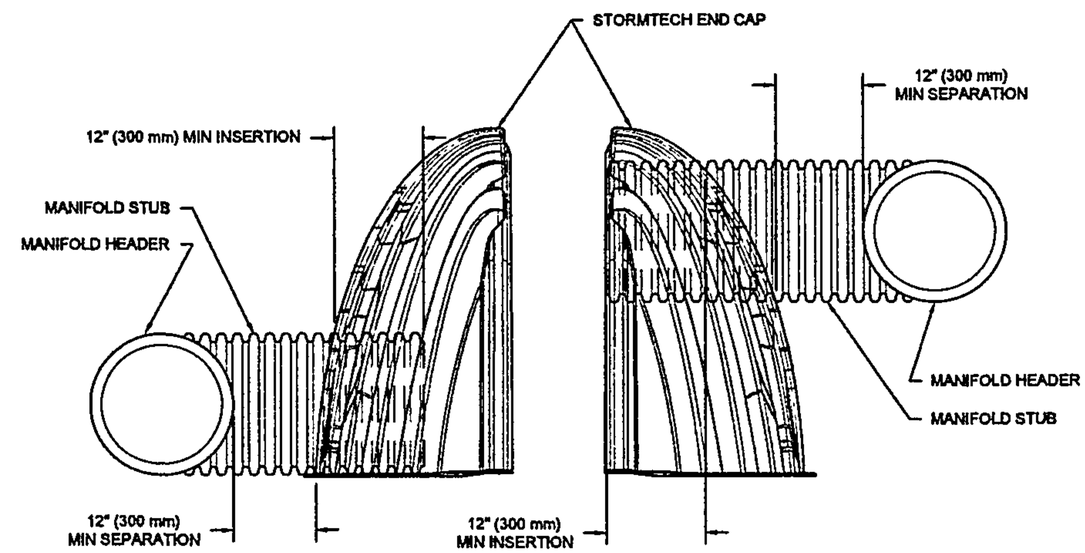

NOTE: MANIFOLD STUB MUST BE LAID HORIZONTAL FOR A PROPER FIT IN END CAP OPENING.

SAFCA & STARBUCKS
ALBUQUERQUE, NM

DATE: 3/31/15 | DRAWN: WCM
PROJECT #: 94281 | CHECKED: KAP

REV	DRW	CHK	DESCRIPTION
5/28/15	WCM	KMB	ADDED CHAMBERS / NEW ELEVATIONS

StormTech
Detention / Retention / Water Quality
70 INWOOD ROAD, SUITE 3 | ROCKY HILL | CT | 06067
866-520-5188 | 888-892-2694 | WWW.STORMTECH.COM

ADS
ADVANCED DRAINAGE SYSTEMS, INC.
4640 TRUEMAN BLVD
HILLIARD, OH 43026
1-800-733-7473

THIS DRAWING HAS BEEN PREPARED BASED ON INFORMATION PROVIDED TO ADS UNDER THE DIRECTION OF THE SITE DESIGN ENGINEER OR OTHER PROJECT REPRESENTATIVE. THE SITE DESIGN ENGINEER SHALL REVIEW THIS DRAWING PRIOR TO CONSTRUCTION. IT IS THE ULTIMATE RESPONSIBILITY OF THE SITE DESIGN ENGINEER TO ENSURE THAT THE PRODUCT(S) DEPICTED AND ALL ASSOCIATED DETAILS MEET ALL APPLICABLE LAWS, REGULATIONS, AND PROJECT REQUIREMENTS.

NYLOPLAST DRAIN BASIN

NTS

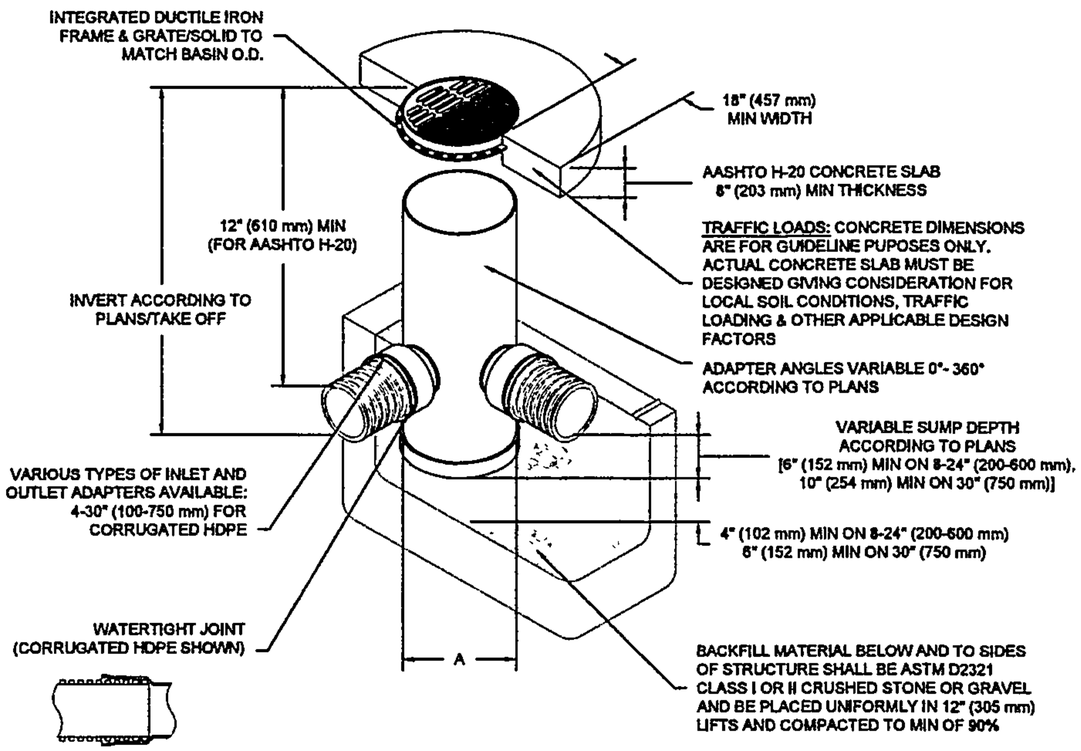

NOTES

1. 8-30" (200-750 mm) GRATES/SOLID COVERS SHALL BE DUCTILE IRON PER ASTM A536 GRADE 70-50-05
2. 12-30" (300-750 mm) FRAMES SHALL BE DUCTILE IRON PER ASTM A536 GRADE 70-50-05
3. DRAIN BASIN TO BE CUSTOM MANUFACTURED ACCORDING TO PLAN DETAILS
4. DRAINAGE CONNECTION STUB JOINT TIGHTNESS SHALL CONFORM TO ASTM D3212 FOR CORRUGATED HDPE (ADS & HANCOR DUAL WALL) & SDR 35 PVC
5. FOR COMPLETE DESIGN AND PRODUCT INFORMATION: WWW.NYLOPLAST-US.COM
6. TO ORDER CALL: 800-821-6710

A	PART #	GRATE/SOLID COVER OPTIONS		
8" (200 mm)	2808AG	PEDESTRIAN LIGHT DUTY	STANDARD LIGHT DUTY	SOLID LIGHT DUTY
10" (250 mm)	2810AG	PEDESTRIAN LIGHT DUTY	STANDARD LIGHT DUTY	SOLID LIGHT DUTY
12" (300 mm)	2812AG	PEDESTRIAN AASHTO H-10	STANDARD AASHTO H-20	SOLID AASHTO H-20
15" (375 mm)	2815AG	PEDESTRIAN AASHTO H-10	STANDARD AASHTO H-20	SOLID AASHTO H-20
18" (450 mm)	2818AG	PEDESTRIAN AASHTO H-10	STANDARD AASHTO H-20	SOLID AASHTO H-20
24" (600 mm)	2824AG	PEDESTRIAN AASHTO H-10	STANDARD AASHTO H-20	SOLID AASHTO H-20
30" (750 mm)	2830AG	PEDESTRIAN AASHTO H-20	STANDARD AASHTO H-20	SOLID AASHTO H-20

SAFCA & STARBUCKS
ALBUQUERQUE, NM

DATE: 3/31/15 DRAWN: WCM
PROJECT #: 94281 CHECKED: KAP

REV	DRW	CHK	DESCRIPTION
5/28/15	WCM	KMB	ADDED CHAMBERS / NEW ELEVATIONS

Nyloplast
3130 VERONA AVE
BUFORD, GA 30518
PHN (770) 932-2443
FAX (770) 932-2488
www.nyloplast-us.com

ADS
4640 TRUEMAN BLVD
HILLIARD, OH 43026
1-800-733-7473
ADVANCED DRAINAGE SYSTEMS, INC.

THIS DRAWING HAS BEEN PREPARED BASED ON INFORMATION PROVIDED TO ADS UNDER THE DIRECTION OF THE SITE DESIGN ENGINEER OR OTHER PROJECT REPRESENTATIVE. THE SITE DESIGN ENGINEER SHALL REVIEW THIS DRAWING PRIOR TO CONSTRUCTION. IT IS THE ULTIMATE RESPONSIBILITY OF THE SITE DESIGN ENGINEER TO ENSURE THAT THE PRODUCT(S) DEPICTED AND ALL ASSOCIATED DETAILS MEET ALL APPLICABLE LAWS, REGULATIONS, AND PROJECT REQUIREMENTS.

Project: 94281 - Safca & Starbucks - REV0

StormTech

Chamber Model -	MC-4500	
Units -	Imperial	Click Here for Metric
Number of Chambers -	58	
Number of End Caps -	6	
Voids in the stone (porosity) -	30	%
Base of Stone Elevation -	36.75	ft
Amount of Stone Above Chambers -	12	in
Amount of Stone Below Chambers -	9	in
Area of system -	2741	sf Min. Area - 2314 sf min. area

☑ Include Perimeter Stone in Calculations

Height of System (inches)	Incremental Single Chamber (cubic feet)	Incremental Single End Cap (cubic feet)	Incremental Chambers (cubic feet)	Incremental End Cap (cubic feet)	Incremental Stone (cubic feet)	Incremental Ch, EC and Stone (cubic feet)	Cumulative System (cubic feet)	Elevation (feet)
81	0.00	0.00	0.00	0.00	68.53	68.53	10024.67	43.50
80	0.00	0.00	0.00	0.00	68.53	68.53	9956.14	43.42
79	0.00	0.00	0.00	0.00	68.53	68.53	9887.62	43.33
78	0.00	0.00	0.00	0.00	68.53	68.53	9819.09	43.25
77	0.00	0.00	0.00	0.00	68.53	68.53	9750.57	43.17
76	0.00	0.00	0.00	0.00	68.53	68.53	9682.04	43.08
75	0.00	0.00	0.00	0.00	68.53	68.53	9613.52	43.00
74	0.00	0.00	0.00	0.00	68.53	68.53	9544.99	42.92
73	0.00	0.00	0.00	0.00	68.53	68.53	9476.47	42.83
72	0.00	0.00	0.00	0.00	68.53	68.53	9407.94	42.75
71	0.00	0.00	0.00	0.00	68.53	68.53	9339.42	42.67
70	0.00	0.00	0.00	0.00	68.53	68.53	9270.89	42.58
69	0.04	0.00	2.38	0.00	67.81	70.19	9202.37	42.50
68	0.12	0.01	6.73	0.06	66.49	73.28	9132.18	42.42
67	0.16	0.03	9.55	0.16	65.61	75.32	9058.90	42.33
66	0.21	0.05	12.11	0.29	64.81	77.20	8983.58	42.25
65	0.27	0.07	15.56	0.41	63.73	79.70	8906.38	42.17
64	0.45	0.09	26.26	0.53	60.49	87.28	8826.67	42.08
63	0.67	0.11	38.59	0.68	56.75	96.01	8739.40	42.00
62	0.80	0.14	46.34	0.85	54.37	101.56	8643.39	41.92
61	0.91	0.17	52.67	1.01	52.42	106.10	8541.83	41.83
60	1.00	0.19	58.17	1.15	50.73	110.05	8435.73	41.75
59	1.09	0.22	63.07	1.29	49.22	113.57	8325.68	41.67
58	1.16	0.24	67.48	1.45	47.85	116.78	8212.11	41.58
57	1.23	0.27	71.57	1.62	46.57	119.76	8095.33	41.50
56	1.30	0.30	75.38	1.79	45.37	122.54	7975.57	41.42
55	1.36	0.32	78.94	1.94	44.26	125.14	7853.03	41.33
54	1.42	0.35	82.29	2.09	43.21	127.59	7727.89	41.25
53	1.47	0.37	85.45	2.23	42.22	129.90	7600.30	41.17
52	1.53	0.39	88.46	2.36	41.28	132.10	7470.40	41.08
51	1.57	0.42	91.32	2.50	40.38	134.20	7338.30	41.00
50	1.62	0.44	94.04	2.64	39.52	136.20	7204.10	40.92
49	1.67	0.46	96.64	2.78	38.70	138.12	7067.90	40.83
48	1.71	0.48	99.13	2.90	37.92	139.95	6929.78	40.75
47	1.75	0.50	101.51	3.03	37.16	141.70	6789.83	40.67
46	1.79	0.53	103.78	3.15	36.45	143.38	6648.13	40.58
45	1.83	0.55	105.98	3.27	35.75	145.00	6504.76	40.50
44	1.86	0.56	108.08	3.39	35.09	146.55	6359.76	40.42
43	1.90	0.58	110.10	3.50	34.44	148.05	6213.21	40.33
42	1.93	0.60	112.05	3.61	33.83	149.48	6065.16	40.25
41	1.96	0.62	113.92	3.72	33.23	150.87	5915.67	40.17
40	2.00	0.64	115.72	3.83	32.66	152.21	5764.80	40.08
39	2.03	0.66	117.45	3.93	32.11	153.49	5612.60	40.00
38	2.05	0.67	119.12	4.04	31.58	154.74	5459.10	39.92
37	2.08	0.69	120.73	4.14	31.06	155.93	5304.37	39.83
36	2.11	0.71	122.27	4.24	30.57	157.08	5148.43	39.75
35	2.13	0.72	123.76	4.34	30.09	158.20	4991.35	39.67
34	2.16	0.74	125.20	4.44	29.63	159.28	4833.15	39.58
33	2.18	0.76	126.59	4.54	29.19	160.31	4673.87	39.50
32	2.21	0.77	127.92	4.63	28.76	161.31	4513.56	39.42
31	2.23	0.79	129.20	4.72	28.35	162.27	4352.25	39.33
30	2.25	0.80	130.43	4.81	27.95	163.20	4189.98	39.25
29	2.27	0.82	131.62	4.92	27.56	164.11	4026.78	39.17
28	2.29	0.84	132.76	5.04	27.18	164.99	3862.68	39.08
27	2.31	0.85	133.86	5.08	26.85	165.78	3697.69	39.00
26	2.33	0.86	134.90	5.15	26.51	166.56	3531.91	38.92
25	2.34	0.87	135.91	5.23	26.18	167.33	3365.35	38.83
24	2.36	0.89	136.87	5.31	25.87	168.05	3198.02	38.75
23	2.38	0.90	137.80	5.39	25.57	168.75	3029.97	38.67
22	2.39	0.91	138.68	5.46	25.28	169.42	2861.21	38.58
21	2.41	0.92	139.52	5.53	25.01	170.06	2691.79	38.50
20	2.42	0.93	140.32	5.61	24.75	170.67	2521.73	38.42
19	2.43	0.95	141.08	5.67	24.50	171.25	2351.06	38.33
18	2.44	0.96	141.80	5.74	24.26	171.80	2179.81	38.25
17	2.46	0.97	142.48	5.80	24.04	172.33	2008.00	38.17
16	2.47	0.98	143.13	5.87	23.83	172.82	1835.68	38.08

F22D002 DRB# 1010038

DEVELOPMENT REVIEW BOARD
HYDROLOGY SECTION

HEARING DATE: June 24, 2015
AGENDA ITEM NO: 10

DRB Project Number: 1010038
PROJECT: Tramway/ Montgomery Sandia Area CU

SUBJECT & ENGINEERING COMMENTS:

Sketch Plat, **Minor Preliminary/ Final Plat**, Preliminary Plat(I.L.), Final Plat,
Sidewalk Deferral, Sidewalk Waiver/Variance,
Site Plan for Building Permit, Site Plan for Subdivision,
SIA Extension – 2 Year, SIA Extension – Sidewalk,
Vacation of Public Easements, Vacation of Public Right-of-Way

- A grading plan has been submitted and reviewed.
- Hydrology has provided comments that need to be addressed prior to approval for DRB action.

when writing letter,
Be sure to note if it is
approved for DRB action
or not & let me know

RESOLUTION/COMMENTS:

Parks & Rec:

Water:

Transportation:

Planning:

Rita

APPROVED __; DELEGATED__ TO: (TRANS) (HYD) (WUA) (PRKS) (PLNG)

SIGNED-OFF: ___ (I.L.) (SPSD) (SPBP) (FINAL PLAT) (OTHER_____)

DEFERRED __DATE_____ ; DENIED __;

SIGNED: Rita Harmon, P.E.
Hydrology Section; City Engineer Designee
505-924-3695

CITY OF ALBUQUERQUE

February 25, 2016

Joe Slagle
Slagle Herr Architects, Inc.
413 Second St., NW
Albuquerque, NM 87102

Re: Sandia Area Federal Credit Union
11301 Montgomery Blvd., NE
Request for Certificate of Occupancy- Transportation Development
Engineer's/Architect's Stamp dated 3-16-15 (F22-D002)
Certification dated 2-12-16

Dear Mr. Slagle,

Based upon the information provided in your submittal received 2-24-16, Transportation Development has no objection to the issuance of a Permanent Certificate of Occupancy. This letter serves as a "green tag" from Transportation Development for a Permanent Certificate of Occupancy to be issued by the Building and Safety Division.

If you have any questions, please contact Gary Sandoval at (505) 924-3675 or me at (505)924-3630.

Sincerely,

John B. Gurulé, P.E.
Senior Engineer, Planning Dept.
Development Review Services

\gs via: email
C: CO Clerk, File

PO Box 1293
Albuquerque
New Mexico 87103
www.cabq.gov

City of Albuquerque

Planning Department

Development & Building Services Division

DRAINAGE AND TRANSPORTATION INFORMATION SHEET

(REV 02/2013)

Project Title: Sandia Area Federal Credit Union Building Permit #: T201591112 City Drainage #: F22D002

DRB#: _____ EPC#: _____ Work Order#: _____

Legal Description: Tract C, New Holiday Park Subdivision

City Address: 11301 Montgomery Blvd. NE, Albuquerque, NM

Engineering Firm: Rio Grande Engineering Contact: David Soule

Address: 1606 Central Ave, SE, Suite 201 Albuquerque, NM 87106

Phone#: 505 872 0999 Fax#: _____ E-mail: david@riograndeengineering.com

Owner: Sandia Area Federal Credit Union Contact: Scott Connely

Address: 8000 Palomas Ave NE, Albuquerque, NM 87109

Phone#: 505 256 6000 Fax#: _____ E-mail: Scott.Connely @sandia .org

Architect: Slagle Herr Architects Inc. Contact: Joe Slagle

Address: 413 Second Street SW, Albuquerque, NM 87102

Phone#: 505 246 0870 Fax#: _____ E-mail: joe@slagleherr.com

Surveyor: Advantage Surveying Contact: Robert Guiterrez

Address: 804 Lead Avenue SW, Albuquerque NM 87102

Phone#: 505 243 1212 Fax#: _____ E-mail: _____

Contractor: N/A Contact: _____

Address: _____

Phone#: _____ Fax#: _____ E-mail: _____

TYPE OF SUBMITTAL:

____ DRAINAGE REPORT
____ DRAINAGE PLAN 1st SUBMITTAL
____ DRAINAGE PLAN RESUBMITTAL
____ CONCEPTUAL G & D PLAN
____ GRADING PLAN
____ EROSION & SEDIMENT CONTROL PLAN (ESC)
____ ENGINEER'S CERT (HYDROLOGY)
____ CLOMR/LOMR
X TRAFFIC CIRCULATION LAYOUT (TCL)
____ ENGINEER'S CERT (TCL)
____ ENGINEER'S CERT (DRB SITE PLAN)
____ ENGINEER'S CERT (ESC)
____ SO-19
____ OTHER (SPECIFY)

CHECK TYPE OF APPROVAL/ACCEPTANCE SOUGHT:

AO

____ SIA/FINANCIAL GUARANTEE RELEASE
____ PRELIMINARY PLAT APPROVAL
____ S. DEV. PLAN FOR SUB'D APPROVAL
____ S. DEV. FOR BLDG. PERMIT APPROVAL
____ SECTOR PLAN APPROVAL
____ FINAL PLAT APPROVAL
X CERTIFICATE OF OCCUPANCY (PERM)
____ CERTIFICATE OF OCCUPANCY (TCL TEMP)
____ FOUNDATION PERMIT APPROVAL
____ BUILDING PERMIT APPROVAL
____ GRADING PERMIT APPROVAL
____ PAVING PERMIT APPROVAL
____ WORK ORDER APPROVAL
____ GRADING CERTIFICATION
____ SO-19 APPROVAL
____ ESC PERMIT APPROVAL
____ ESC CERT. ACCEPTANCE
____ OTHER (SPECIFY)

RECEIVED
FEB 24 2016
LAND DEVELOPMENT SECTION

WAS A PRE-DESIGN CONFERENCE ATTENDED: X Yes ____ No ____ Copy Provided

DATE SUBMITTED: 2-24-16 By: Joe Slagle

Requests for approvals of Site Development Plans and/or Subdivision Plats shall be accompanied by a drainage submittal. The particular nature, location, anc scope to the proposed development defines the degree of drainage detail. One or more of the following levels of submittal may be required based on the followin

1. **Conceptual Grading and Drainage Plan:** Required for approval of Site Development Plans greater than five (5) acres and Sector Plans
2. **Drainage Plans:** Required for building permits, grading permits, paving permits and site plans less than five (5) acres
3. **Drainage Report:** Required for subdivision containing more than ten (10) lots or constituting five (5) acres or more
4. **Erosion and Sediment Control Plan:** Required for any new development and redevelopment site with 1-acre or more of land disturbing area, including project less than 1-acre than are part of a larger common plan of development

slagleherr

TRAFFIC CERTIFICATION FOR PERMANENT CERTIFICATE OF OCCUPANCY

RE: 11301 MONTGOMERY BLVD NE SANDIA AREA FEDERAL CREDIT UNION (F22-D002)

I, Joe Slagle, NMRA 2284, of the firm Slagle Herr Architects, hereby certify that this project is in substantial compliance with and in accordance with the design intent of the TCL plan approved on 4-28-15. I certify that I have personally visited the project site on 2-12-16 and have determined by visual inspection that the survey data provided is representative of actual site conditions and is true and correct to the best of my knowledge and belief.

This submittal is for Permanent Certificate of Occupancy for the Sandia Area Federal Credit Union branch. The Starbucks was approved for permanent C.O. on February 17, 2016. This will complete the development as shown on the approved site development plan until a user is found for the rear parcel.

The record information presented hereon is not necessarily complete and intended only to verify substantial compliance of the traffic aspects of this project. Those relying on the record document are advised to obtain independent verification of its accuracy before using it for any other purpose.

Joe Slagle, Architect

2·24·16
Date

RECEIVED
FEB 24 2016
LAND DEVELOPMENT SECTION

STATE OF NEW MEXICO
JOE L. SLAGLE
No. 2284
REGISTERED ARCHITECT
2·24·16

413 second street sw
albuquerque new mexico 87102

CITY OF ALBUQUERQUE

February 17, 2016

Joe Slagle
Slagle Herr Architects, Inc.
413 2nd St., SW
Albuquerque, NM 87102

Re: Starbucks
11321 Montgomery NE
Request for Certificate of Occupancy- Transportation Development
Engineer's/Architect's Stamp dated 3-16-15 (F22-D002)
Certification dated 2-12-16

Dear Mr. Slagle,

Based upon the information provided in your submittal received 2-11-16, Transportation Development has no objection to the issuance of a Permanent Certificate of Occupancy. This letter serves as a "green tag" from Transportation Development for a Permanent Certificate of Occupancy to be issued by the Building and Safety Division.

If you have any questions, please contact Gary Sandoval at (505) 924-3675 or me at (505)924-3991.

Sincerely,

Racquel M. Michel, P.E.
Traffic Engineer, Planning Dept.
Development Review Services

\gs via: email
C: CO Clerk, File

PO Box 1293
Albuquerque
New Mexico 87103
www.cabq.gov

City of Albuquerque

Planning Department

Development & Building Services Division

DRAINAGE AND TRANSPORTATION INFORMATION SHEET

(REV 02/2013)

Project Title: Starbucks Building Permit #: _____ City Drainage #: F22D002

DRB#: _____ EPC#: _____ Work Order#: _____

Legal Description: Tract C, New Holiday Park Subdivision

City Address: 11321 Montgomery Blvd. NE, Albuquerque, NM

Engineering Firm: Rio Grande Engineering Contact: David Soule

Address: 1606 Central Ave, SE, Suite 201 Albuquerque, NM 87106

Phone#: 505 872 0999 Fax#: _____ E-mail: david@riograndeengineering.com

Owner: Sandia Area Federal Credit Union Contact: Scott Connely

Address: 8000 Palomas Ave NE, Albuquerque, NM 87109

Phone#: 505 256 6000 Fax#: _____ E-mail: Scott.Connely @sandia .org

Architect: Slagle Herr Architects Inc. Contact: Joe Slagle

Address: 413 Second Street SW, Albuquerque, NM 87102

Phone#: 505 246 0870 Fax#: _____ E-mail: joe@slagleherr.com

Surveyor: Advantage Surveying Contact: Robert Guiterrez

Address: 804 Lead Avenue SW, Albuquerque NM 87102

Phone#: 505 243 1212 Fax#: _____ E-mail: _____

Contractor: N/A Contact: _____

Address: _____

Phone#: _____ Fax#: _____ E-mail: _____

TYPE OF SUBMITTAL:

____ DRAINAGE REPORT
____ DRAINAGE PLAN 1st SUBMITTAL
____ DRAINAGE PLAN RESUBMITTAL
____ CONCEPTUAL G & D PLAN
____ GRADING PLAN
____ EROSION & SEDIMENT CONTROL PLAN (ESC)
____ ENGINEER'S CERT (HYDROLOGY)
____ CLOMR/LOMR
X TRAFFIC CIRCULATION LAYOUT (TCL)
____ ENGINEER'S CERT (TCL)
____ ENGINEER'S CERT (DRB SITE PLAN)
____ ENGINEER'S CERT (ESC)
____ SO-19
____ OTHER (SPECIFY)

CHECK TYPE OF APPROVAL/ACCEPTANCE SOUGHT:

____ SIA/FINANCIAL GUARANTEE RELEASE
____ PRELIMINARY PLAT APPROVAL
____ S. DEV. PLAN FOR SUB'D APPROVAL
____ S. DEV. FOR BLDG. PERMIT APPROVAL
____ SECTOR PLAN APPROVAL
____ FINAL PLAT APPROVAL
X CERTIFICATE OF OCCUPANCY (PERM)
____ CERTIFICATE OF OCCUPANCY (TCL TEMP)
____ FOUNDATION PERMIT APPROVAL
____ BUILDING PERMIT APPROVAL
____ GRADING PERMIT APPROVAL
____ PAVING PERMIT APPROVAL
____ WORK ORDER APPROVAL
____ GRADING CERTIFICATION
____ SO-19 APPROVAL
____ ESC PERMIT APPROVAL
____ ESC CERTIFICATION
____ OTHER (SPECIFY)

RECEIVED FEB 11 2016 AND DEVELOPMENT SECTION

WAS A PRE-DESIGN CONFERENCE ATTENDED: X Yes ____ No ____ Copy Provided

DATE SUBMITTED: 2-12-16 By: Joe Slagle

Requests for approvals of Site Development Plans and/or Subdivision Plats shall be accompanied by a drainage submittal. The particular nature, location, anc scope to the proposed development defines the degree of drainage detail. One or more of the following levels of submittal may be required based on the followin

1. **Conceptual Grading and Drainage Plan:** Required for approval of Site Development Plans greater than five (5) acres and Sector Plans
2. **Drainage Plans:** Required for building permits, grading permits, paving permits and site plans less than five (5) acres
3. **Drainage Report:** Required for subdivision containing more than ten (10) lots or constituting five (5) acres or more
4. **Erosion and Sediment Control Plan:** Required for any new development and redevelopment site with 1-acre or more of land disturbing area, including project less than 1-acre than are part of a larger common plan of development

slagleherr

TRAFFIC CERTIFICATION FOR PERMANENT CERTIFICATE OF OCCUPANCY

RE: 11321 MONTGOMERY BLVD NE (F22-D002) (formerly 11301 Montgomerty Blvd. NE)

I, Joe Slagle, NMRA 2284, of the firm Slagle Herr Architects, hereby certify that this project is in substantial compliance with and in accordance with the design intent of the TCL plan approved on 4-28-15. I certify that I have personally visited the project site on 2-12-16 and have determined by visual inspection that the survey data provided is representative of actual site conditions and is true and correct to the best of my knowledge and belief. The comment on the Dec. 4 2015 letter regarding eh sidewalk on the east side of the building has been addressed. This certification is submitted in support of a request for permanent certificate of occupancy.

This submittal is for Permanent Certificate of Occupancy for the Starbucks only. The west half of the site is under construction as part of the Sandia Area Federal Credit Union branch and will be certified separately upon completion. The accompanying plan is noted accordingly.

The record information presented hereon is not necessarily complete and intended only to verify substantial compliance of the traffic aspects of this project. Those relying on the record document are advised to obtain independent verification of its accuracy before using it for any other purpose.

Joe Slagle, Architect

2.12.16
Date

RECEIVED
FEB 11 2016
LAND DEVELOPMENT SECTION

413 second street sw
albuquerque new mexico 87102

CITY OF ALBUQUERQUE

Planning Department
Transportation Development Services

December 4, 2015

Joe Slagle
Slagle Herr Architects Inc.
413 Second St., SW
Albuquerque, NM 87102

Re: Starbucks
11301 Montgomery Blvd., NE
60-Day Temporary Certificate of Occupancy- Transportation Development
Engineer's/Architect's Stamp dated 3-16-15 (F22-D002)
Certification dated 12-01-15

Dear Mr. Slagle,

Based upon the information provided in your submittal received 12-01-15, Transportation Development has no objection to the issuance of a 60-day Temporary Certificate of Occupancy. This letter serves as a "green tag" from Transportation Development for a 60-day Temporary Certificate of Occupancy to be issued by the Building and Safety Division.

Prior to the issuance of a permanent Certificate of Occupancy, the following items must be addressed:

- Sidewalk on east side of building must be repaired and/or replaced for pedestrian access.

Once corrections are complete resubmit acceptable package along with fully completed Drainage Transportation Information Sheet to front counter personnel for log in and evaluation by Transportation. For digital submittal and minor comments and/or repairs, please submit photos to PLNDRS@cabq.gov prior to submittal. If you have any questions, please contact me at (505) 924-3991.

Sincerely,

Racquel M. Michel, P.E.
Traffic Engineer, Planning Dept.
Development Review Services

\gs via: email
C: CO Clerk, File

PO Box 1293
Albuquerque
New Mexico 87103
www.cabq.gov

City of Albuquerque

Planning Department

Development & Building Services Division

DRAINAGE AND TRANSPORTATION INFORMATION SHEET

(REV 02/2013)

Project Title: Sandia Area Federal Credit Union - Starbucks Building Permit #: _____ City Drainage #: F22D002

DRB#: _____ EPC#: _____ Work Order#: _____

Legal Description: Tract C, New Holiday Park Subdivision

City Address: 11301 Montgomery Blvd. NE, Albuquerque, NM

Engineering Firm: Rio Grande Engineering Contact: David Soule

Address: 1606 Central Ave, SE, Suite 201 Albuquerque, NM 87106

Phone#: 505 872 0999 Fax#: _____ E-mail: david@riograndeengineering.com

Owner: Sandia Area Federal Credit Union Contact: Scott Connely

Address: 8000 Palomas Ave NE, Albuquerque, NM 87109

Phone#: 505 256 6000 Fax#: _____ E-mail: Scott.Connely @sandia .org

Architect: Slagle Herr Architects Inc. Contact: Joe Slagle

Address: 413 Second Street SW, Albuquerque, NM 87102

Phone#: 505 246 0870 Fax#: _____ E-mail: joe@slagleherr.com

Surveyor: Advantage Surveying Contact: Robert Guiterrez

Address: 804 Lead Avenue SW, Albuquerque NM 87102

Phone#: 505 243 1212 Fax#: _____ E-mail: _____

Contractor: N/A Contact: _____

Address: _____

Phone#: _____ Fax#: _____ E-mail: _____

TYPE OF SUBMITTAL:

____ DRAINAGE REPORT
____ DRAINAGE PLAN 1st SUBMITTAL
____ DRAINAGE PLAN RESUBMITTAL
____ CONCEPTUAL G & D PLAN
____ GRADING PLAN
____ EROSION & SEDIMENT CONTROL PLAN (ESC)
____ ENGINEER'S CERT (HYDROLOGY)
____ CLOMR/LOMR
X TRAFFIC CIRCULATION LAYOUT (TCL)
____ ENGINEER'S CERT (TCL)
____ ENGINEER'S CERT (DRB SITE PLAN)
____ ENGINEER'S CERT (ESC)
____ SO-19
____ OTHER (SPECIFY)

CHECK TYPE OF APPROVAL/ACCEPTANCE SOUGHT:

____ SIA/FINANCIAL GUARANTEE RELEASE
____ PRELIMINARY PLAT APPROVAL
____ S. DEV. PLAN FOR SUB'D APPROVAL
____ S. DEV. FOR BLDG. PERMIT APPROVAL
____ SECTOR PLAN APPROVAL
____ FINAL PLAT APPROVAL
____ CERTIFICATE OF OCCUPANCY (PERM)
X CERTIFICATE OF OCCUPANCY (TCL TEMP)
____ FOUNDATION PERMIT APPROVAL
____ BUILDING PERMIT APPROVAL
____ GRADING PERMIT APPROVAL
____ PAVING PERMIT APPROVAL
____ WORK ORDER APPROVAL
____ GRADING CERTIFICATION
____ SO-19 APPROVAL
____ ESC PERMIT APPROVAL
____ ESC CERT. ACCEPTANCE
____ OTHER (SPECIFY)

RECEIVED
DEC 01 2015
LAND DEVELOPMENT SECTION

WAS A PRE-DESIGN CONFERENCE ATTENDED: X Yes ____ No ____ Copy Provided

DATE SUBMITTED: 12-1-15 By: Joe Slagle

Requests for approvals of Site Development Plans and/or Subdivision Plats shall be accompanied by a drainage submittal. The particular nature, location, and scope to the proposed development defines the degree of drainage detail. One or more of the following levels of submittal may be required based on the followin

1. **Conceptual Grading and Drainage Plan:** Required for approval of Site Development Plans greater than five (5) acres and Sector Plans
2. **Drainage Plans:** Required for building permits, grading permits, paving permits and site plans less than five (5) acres
3. **Drainage Report:** Required for subdivision containing more than ten (10) lots or constituting five (5) acres or more
4. **Erosion and Sediment Control Plan:** Required for any new development and redevelopment site with 1-acre or more of land disturbing area, including project less than 1-acre than are part of a larger common plan of development

slagleherr

TRAFFIC CERTIFICATION FOR TEMPORARY CERTIFICATE OF OCCUPANCY

RE: 11301 MONTGOMERY BLVD NE (F22-D002)

I, Joe Slagle, NMRA 2284, of the firm Slagle Herr Architects, hereby certify that this project is in substantial compliance with and in accordance with the design intent of the TCL plan approved on 4-28-15. I certify that I have personally visited the project site on 12-1-15 and have determined by visual inspection that the survey data provided is representative of actual site conditions and is true and correct to the best of my knowledge and belief. This certification is submitted in support of a request for temporary certificate of occupancy.

This submittal is for Temporary Certificate of Occupancy for the Starbucks only. The west half of the site is under construction as part of the Sandia Area Federal Credit Union branch and will be certified separately upon completion. The accompanying plan is noted accordingly.

The record information presented hereon is not necessarily complete and intended only to verify substantial compliance of the traffic aspects of this project. Those relying on the record document are advised to obtain independent verification of its accuracy before using it for any other purpose.

Joe Slagle, Architect

12-1-15
Date

RECEIVED
DEC 01 2015
LAND DEVELOPMENT SECTION

STATE OF NEW MEXICO
JOE L. SLAGLE
No. 2284
REGISTERED ARCHITECT
12·1·15

413 second street sw
albuquerque new mexico 87102

City of Albuquerque

Planning Department

Development & Building Services Division

DRAINAGE AND TRANSPORTATION INFORMATION SHEET

(REV 02/2013)

Project Title: Sandia Area Federal Credit Union Building Permit #: _____ City Drainage #: F22D002

DRB#: _____ EPC#: _____ Work Order#: _____

Legal Description: Tract C, New Holiday Park Subdivision

City Address: 11301 Montgomery Blvd. NE, Albuquerque, NM

Engineering Firm: Rio Grande Engineering Contact: David Soule

Address: 1606 Central Ave, SE, Suite 201 Albuquerque, NM 87106

Phone#: 505 872 0999 Fax#: _____ E-mail: david@riograndeengineering.com

Owner: Sandia Area Federal Credit Union Contact: Scott Connely

Address: 8000 Palomas Ave NE, Albuquerque, NM 87109

Phone#: 505 256 6000 Fax#: _____ E-mail: Scott.Connely @sandia .org

Architect: Slagle Herr Architects Inc. Contact: Joe Slagle

Address: 413 Second Street SW, Albuquerque, NM 87102

Phone#: 505 246 0870 Fax#: _____ E-mail: joe@slagleherr.com

Surveyor: Advantage Surveying Contact: Robert Guiterrez

Address: 804 Lead Avenue SW, Albuquerque NM 87102

Phone#: 505 243 1212 Fax#: _____ E-mail: _____

Contractor: N/A Contact: _____

Address: _____

Phone#: _____ Fax#: _____ E-mail: _____

TYPE OF SUBMITTAL:

____ DRAINAGE REPORT
____ DRAINAGE PLAN 1st SUBMITTAL
____ DRAINAGE PLAN RESUBMITTAL
____ CONCEPTUAL G & D PLAN
____ GRADING PLAN
____ EROSION & SEDIMENT CONTROL PLAN (ESC)
____ ENGINEER'S CERT (HYDROLOGY)
____ CLOMR/LOMR
X TRAFFIC CIRCULATION LAYOUT (TCL)
____ ENGINEER'S CERT (TCL)
____ ENGINEER'S CERT (DRB SITE PLAN)
____ ENGINEER'S CERT (ESC)
____ SO-19
____ OTHER (SPECIFY)

CHECK TYPE OF APPROVAL/ACCEPTANCE SOUGHT:

____ SIA/FINANCIAL GUARANTEE RELEASE
____ PRELIMINARY PLAT APPROVAL
____ S. DEV. PLAN FOR SUB'D APPROVAL
____ S. DEV. FOR BLDG. PERMIT APPROVAL
____ SECTOR PLAN APPROVAL
____ FINAL PLAT APPROVAL
____ CERTIFICATE OF OCCUPANCY (PERM)
____ CERTIFICATE OF OCCUPANCY (TCL TEMP)
____ FOUNDATION PERMIT APPROVAL
____ BUILDING PERMIT APPROVAL
____ GRADING PERMIT APPROVAL
____ PAVING PERMIT APPROVAL
____ WORK ORDER APPROVAL
____ GRADING CERTIFICATION
____ SO-19 APPROVAL
____ ESC PERMIT APPROVAL
____ ESC CERT. ACCEPTANCE
____ OTHER (SPECIFY)

RECEIVED
MAR 18 2015
LAND DEVELOPMENT SECTION
VS Verified

WAS A PRE-DESIGN CONFERENCE ATTENDED: X Yes ____ No ____ Copy Provided

DATE SUBMITTED: 2-9-15 By: Joe Slagle

Requests for approvals of Site Development Plans and/or Subdivision Plats shall be accompanied by a drainage submittal. The particular nature, location, anc scope to the proposed development defines the degree of drainage detail. One or more of the following levels of submittal may be required based on the followin

1. **Conceptual Grading and Drainage Plan:** Required for approval of Site Development Plans greater than five (5) acres and Sector Plans
2. **Drainage Plans:** Required for building permits, grading permits, paving permits and site plans less than five (5) acres
3. **Drainage Report:** Required for subdivision containing more than ten (10) lots or constituting five (5) acres or more
4. **Erosion and Sediment Control Plan:** Required for any new development and redevelopment site with 1-acre or more of land disturbing area, including project less than 1-acre than are part of a larger common plan of development

Subject: TCL-10301 Montgomery

Date: Wednesday, March 18, 2015 at 8:58:30 AM Mountain Daylight Time

From: Joe Slagle

To: Wolfenbarger, Jeanne

CC: rmichel@cabq.gov

Jeanne, I am attaching my second re-submittal to your comments of 3-10-15. I will also bring 2 copies of the submittal this morning.
Thank you.
Joe

joe slagle
slagleherr architects
413 second st sw
albuquerque nm
8710250524608 70
slagleherr.com

RECEIVED
MAR 17 2015
LAND DEVELOPMENT SECTION

RECEIVED
MAR 18 2015
LAND DEVELOPMENT SECTION

March 16, 2015

Jeanne Wolfenbarger, P.E.
Senior Engineer, Planning Dept.
Development Review Services

Re: Sandia Area Federal Credit Union, 11301 Montgomery Blvd, NE.
Traffic Circulation Layout Plan dated 3-2-15 (F22-D002)

Ms. Wolfenbarger,

The following is a list of our method of addressing your second round of comments for our submittal per your comment letter dated March 10, 2015.

1. We have engaged Terry Brown to provide us with a Traffic Study per his discussion with you. We understand that the TCL will not be approved until the Traffic Study is complete.
2. The site plan shows heavier lines for new curbs and sidewalks and lighter lines for existing curbs and sidewalks. Notes have been addes indicating existing curbs and sidewalks. Notes and dimensions indicate width of new and existing sidewalks. To further clarify, all curbs inside the property lines are new and all curbs outside the property lines are existing. The ramps in the right of way are shown with truncated domes, and the dome area has been delineated with hatch.
3. ADA ramp widths have been added to keyed notes 18, 29, and 30.
4. Note 46 has been added indicating 2% cross slope maximum. The crosswalk and ramps have been moved outside the property line into the R.O.W.
5. Dimensions have been added to ADA ramps called out by note 3. There is no existing crosswalk at the Montgomery entrance. We are adding one as described in item 4.
6. A dimension has been added to the curb ramp at the soutwest corner of the Starbucks property indicating a ramp width of 6'.

Two copies of the revised TCL are attached with this letter. As I mentioned, as soon as the Traffic Study is complete, it will be provided to you for your review. Should you have questions or need additional information, please contact me.

Sincerely,

RECEIVED
MAR 18 2015
LAND DEVELOPMENT SECTION

Joe Slagle
SlagleHerr Architects

413 second street sw
albuquerque new mexico 87102
505 246 0870 slagleherr.com

CITY OF ALBUQUERQUE

Planning Department
Transportation Development Services

March 10, 2015

Joe Slagle
Slagle Herr Architects, Inc.
413 Second Street SW
Albuquerque, NM 87102

Re: Sandia Area Federal Credit Union, 11301 Montgomery Blvd. NE
Traffic Circulation Layout
Plan Dated 03-02-15 (F22-D002)

Dear Mr. Slagle:

Based upon the information provided in your submittal received 02-09-15, the above referenced plan cannot be approved for Building Permit until the following comments are addressed:

1. The proposed development looks like it may meet the threshold for a Traffic Impact Study based upon the combined square footage of the Sandia Area Credit Union building and the Starbucks. Provide a copy of the Traffic Study upon completion, prior to approval of Traffic Circulation Layout.
2. Show where new on-site curb begins and ends. Please differentiate between existing and new curb. It would be easier to show a different legend for the existing curb. It is still difficult to differentiate where existing and new side walk begin and ends. Please detail widths of existing and new sidewalks. Please show detail of truncated domes on drawing.
3. For ADA ramps called out by Keyed Note 18, 29 and 30, please show width and call out of a " 2% Cross Slope" requirement.
4. For the 6-foot wide ADA accessible connection from Starbucks to the existing street right-of-way, please detail the width of ADA Crossing along with " 2% Cross Slope" requirement for all handicap sections. It is required to have a 6 ft. ADA accessible pathway from the public right-of-way to the building entrances. After reviewing the drawing, it seems that the pedestrian sidewalk protrudes onto private property in-between Starbuck and Credit Union. The pedestrian crosswalk should be kept in the public R.O.W. Please clarify.
5. For the handicap ramp called out by Keyed Note 3, please provide a detail on the drawing with all dimensions and show existing crosswalk and how this crosswalk lines up with curb ramp. Call out existing mastarm and label proposed curb radius for this curb return.

PO Box 1293
Albuquerque
New Mexico 87103
www.cabq.gov

RECEIVED
MAR 1 9 2015
ND DEVELOPMENT SECTION

6. Please call out detail for curb ramp at south-west corner of Starbucks. For this ramp, call out is a minimum width of 6 ft.

7. Please submit two copies of the Traffic Circulation Layout for the next submittal.

Resubmit acceptable package along with fully completed Drainage Transportation Information Sheet to front counter personnel for log in and evaluation by Transportation. If you have any questions, please contact me at (505) 924-3924.

Sincerely,

Jeanne Wolfenbarger, P.E.
Senior Engineer, Planning Dept.
Development Review Services

c: File
CO Clerk

RECEIVED
MAR 18 2015
LAND DEVELOPMENT SECTION

CITY OF ALBUQUERQUE

Planning Department
Transportation Development Services

April 28, 2015

Joe Slagle
Slagle Herr Architects, Inc.
413 Second Street SW
Albuquerque, NM 87102

Re: Sandia Area Federal Credit Union, 11301 Montgomery Blvd. NE
Traffic Circulation Layout
Architect's Stamp dated ~~4-16-15~~ 3-16-15 (F22-D002)

Dear Mr. Slagle,

The TCL submittal received 4-18-15 is approved for Building Permit. A copy of the stamped and signed plan will be needed for each of the building permit plans. Please keep the original to be used for certification of the site for final C.O. for Transportation.

When the site construction is completed and a Certificate of Occupancy (C.O.) is requested, use the original City stamped approved TCL for certification. Redline any minor changes and adjustments that were made in the field. A NM registered architect or engineer must stamp, sign, and date the certification TCL along with indicating that the development was built in "substantial compliance" with the TCL. Submit this certification TCL with a completed Drainage and Transportation Information Sheet to front counter personnel for log in and evaluation by Transportation.

Once verification of certification is completed and approved, notification will be made to Building Safety to issue Final C.O. To confirm that a final C.O. has been issued, call Building Safety at 924-3690.

Sincerely,

Jeanne Wolfenbarger, P.E.
Senior Engineer, Planning Dept.
Development Review Services

c: File
CO Clerk

PO Box 1293
Albuquerque
New Mexico 87103
www.cabq.gov

CITY OF ALBUQUERQUE

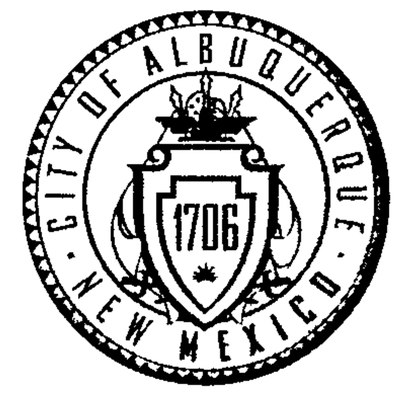

Planning Department
Transportation Development Services

March 10, 2015

Joe Slagle
Slagle Herr Architects, Inc.
413 Second Street SW
Albuquerque, NM 87102

Re: Sandia Area Federal Credit Union, 11301 Montgomery Blvd. NE
Traffic Circulation Layout
Plan Dated 03-02-15 (F22-D002)

Dear Mr. Slagle:

Based upon the information provided in your submittal received 02-09-15, the above referenced plan cannot be approved for Building Permit until the following comments are addressed:

1. The proposed development looks like it may meet the threshold for a Traffic Impact Study based upon the combined square footage of the Sandia Area Credit Union building and the Starbucks. Provide a copy of the Traffic Study upon completion, prior to approval of Traffic Circulation Layout.

2. Show where new on-site curb begins and ends. Please differentiate between existing and new curb. It would be easier to show a different legend for the existing curb. It is still difficult to differentiate where existing and new side walk begin and ends. Please detail widths of existing and new sidewalks. Please show detail of truncated domes on drawing.

3. For ADA ramps called out by Keyed Note 18, 29 and 30, please show width and call out of a " 2% Cross Slope" requirement.

4. For the 6-foot wide ADA accessible connection from Starbucks to the existing street right-of-way, please detail the width of ADA Crossing along with " 2% Cross Slope" requirement for all handicap sections. It is required to have a 6 ft. ADA accessible pathway from the public right-of-way to the building entrances. After reviewing the drawing, it seems that the pedestrian sidewalk protrudes onto private property in-between Starbuck and Credit Union. The pedestrian crosswalk should be kept in the public R.O.W. Please clarify.

5. For the handicap ramp called out by Keyed Note 3, please provide a detail on the drawing with all dimensions and show existing crosswalk and how this crosswalk lines up with curb ramp. Call out existing mastarm and label proposed curb radius for this curb return.

PO Box 1293
Albuquerque
New Mexico 87103
www.cabq.gov

6. Please call out detail for curb ramp at south-west corner of Starbucks. For this ramp, call out is a minimum width of 6 ft.

7. Please submit two copies of the Traffic Circulation Layout for the next submittal.

Resubmit acceptable package along with fully completed Drainage Transportation Information Sheet to front counter personnel for log in and evaluation by Transportation. If you have any questions, please contact me at (505) 924-3924.

Sincerely,

Jeanne Wolfenbarger, P.E.
Senior Engineer, Planning Dept.
Development Review Services

c: File
CO Clerk

City of Albuquerque

Planning Department

Development & Building Services Division

DRAINAGE AND TRANSPORTATION INFORMATION SHEET

(REV 02/2013)

Project Title: Sandia Area Credit Union Building Permit #: _____ City Drainage #: F22D002

DRB#: _____ EPC#: _____ Work Order#: _____

Legal Description: TRACT C2 NEW KOUNTY SUBD.

City Address: 11301 MONTGOMERY NE

Engineering Firm: _____ Contact: _____

Address: _____

Phone#: _____ Fax#: _____ E-mail: _____

Owner: _____ Contact: _____

Address: _____

Phone#: _____ Fax#: _____ E-mail: _____

Architect: SLAGLE HERR ARCHITECTS Contact: JOE SLAGLE

Address: 413 2ND ST. SW

Phone#: 246 0870 Fax#: _____ E-mail: joe@slagleherr.com

Surveyor: _____ Contact: _____

Address: _____

Phone#: _____ Fax#: _____ E-mail: _____

Contractor: _____ Contact: _____

Address: _____

Phone#: _____ Fax#: _____ E-mail: _____

TYPE OF SUBMITTAL:

____ DRAINAGE REPORT
____ DRAINAGE PLAN 1st SUBMITTAL
____ DRAINAGE PLAN RESUBMITTAL
____ CONCEPTUAL G & D PLAN
____ GRADING PLAN
____ EROSION & SEDIMENT CONTROL PLAN (ESC)
____ ENGINEER'S CERT (HYDROLOGY)
____ CLOMR/LOMR
X TRAFFIC CIRCULATION LAYOUT (TCL) (RESUBMITTAL)
____ ENGINEER'S CERT (TCL)
____ ENGINEER'S CERT (DRB SITE PLAN)
____ ENGINEER'S CERT (ESC)
____ SO-19
____ OTHER (SPECIFY)

CHECK TYPE OF APPROVAL/ACCEPTANCE SOUGHT:

____ SIA/FINANCIAL GUARANTEE RELEASE
____ PRELIMINARY PLAT APPROVAL
____ S. DEV. PLAN FOR SUB'D APPROVAL
____ S. DEV. FOR BLDG. PERMIT APPROVAL
____ SECTOR PLAN APPROVAL
____ FINAL PLAT APPROVAL
____ CERTIFICATE OF OCCUPANCY (PERM)
____ CERTIFICATE OF OCCUPANCY (TCL TEMP)
____ FOUNDATION PERMIT APPROVAL
____ BUILDING PERMIT APPROVAL
____ GRADING PERMIT APPROVAL
____ PAVING PERMIT APPROVAL
____ WORK ORDER APPROVAL
____ GRADING CERTIFICATION

____ SO-19 APPROVAL
____ ESC PERMIT APPROVAL
____ ESC CERT. ACCEPTANCE
____ OTHER (SPECIFY)

RECEIVED
MAR - 2 2015
LAND DEVELOPMENT SECTION

WAS A PRE-DESIGN CONFERENCE ATTENDED: ____ Yes ____ No ____ Copy Provided

DATE SUBMITTED: 3.2.15 By: _____

Requests for approvals of Site Development Plans and/or Subdivision Plats shall be accompanied by a drainage submittal. The particular nature, location, and scope to the proposed development defines the degree of drainage detail. One or more of the following levels of submittal may be required based on the followin

1. **Conceptual Grading and Drainage Plan:** Required for approval of Site Development Plans greater than five (5) acres and Sector Plans
2. **Drainage Plans:** Required for building permits, grading permits, paving permits and site plans less than five (5) acres
3. **Drainage Report:** Required for subdivision containing more than ten (10) lots or constituting five (5) acres or more
4. **Erosion and Sediment Control Plan:** Required for any new development and redevelopment site with 1-acre or more of land disturbing area, including project less than 1-acre than are part of a larger common plan of development

March 2, 2015

Jeanne Wolfenbarger, P.E.
Senior Engineer, Planning Dept.
Development Review Services

Re: Sandia Area Federal Credit Union, 11301 Montgomery Blvd, NE.
Traffic Circulation Layout
Plan dated 02-04-15 (F22-D002)

Ms. Wolfenbarger,

The following is a list of our method of addressing your comments for our original submittal per your letter dated Feb. 12, 2015.

1. We have engaged Terry Brown to provide us with a Traffic Study per his discussion with you.
2. The zone atlas page number has been added to the vicinity map.
3. Sheet A002 has been included in this re-submittal. This sheet contains all site details.
4. The R.O.W. widths for Montgomery and Cairo have been added to the site plan. The sidewalk widths bordering the subject property have also been added to the site plan.
5. The site plan has been revised to show a new ADA ramp at the NW corner of the Montgomery/Cairo intersection. The keyed note has also been revised to accurately describe the new ramp.
6. A note has been added (key note 40) calling out to remove the existing HCP parking signs.
7. The site plan has been revised to show existing construction in a lighter line, and the new construction in the right-of-way has been hatched to further clarify. The existing ramps at the Montgomery entrance are now shown to be removed and new ramps installed at the new crosswalk location.
8. Note 3 has been revised to call out COA drawing numbers, and includes the requirement for truncated domes.
9. The curves on the temporary curb as described in keynote 23 have been noted to show radii.
10. The queue length has been added to the site plan. Cars are shown as well for reference.
11. The drive through lane widths have been added to the site plan as well as stripes north of the islands.
12. A 6' wide walkway is shown on the site plan west of the Starbuck's building which leads along the entrydrive and crosses the starbucks parking lot on the north side. From here, one can reach the entry. This route was chosen because the grade changes in this area are severe and a closer route by ramp is not feasable. The wall on the east side of the 6' walkway is a retaining wall. I would be glad to discuss this in further detail if required.

4 1 3 s e c o n d s t r e e t s w
a l b u q u e r q u e n e w m e x i c o 8 7 1 o 2
5 o 5 2 4 6 o 8 7 o s l a g l e h e r r . c o m

13. The van accessible lanes are now shown to be 8' wide at both buildings. The requested language has been added to the hcp sign detail: 3/A002
14. The words "NO PARKING" have been added to the van accessible aisles on the site plan.
15. A delivery vehicle route has been added to the site plan. Dashed line with notation "delivery route" and "drop off area".
16. Painted letters reading "ONE WAY-DO NOT ENTER" have been added to the site plan at both drive through lane exit areas. (key note 43)
17. The wheelchair ramp at the south side of the credit union building has been modified to be a linear ramp, and the detail key at keynote 29 has been changed to 6/A002.
18. The clear sight triangle has been added at the drive onto Montgomery and keynote 44 includes the requested text.
19. This comment is the same as comment 18.
20. mini clear site triangles per Section 6.B.12 of the DPM have been added at the Cairo driveway, and noted per keynote 44.
21. The required number of accessible parking spaces is based on the total number of required parking spaces, not parking spaces provided. This requirement is also described in the City of Albuquerque Zoning Ordinance Section 14-16-3-1.Per these regulations the requirements are as follows:
    * 1-25 spaces required: 1 accessible space required
    * 26-35 spaces required: 2 accessible spaces required
    * 36-50 spaces required: 3 accessible spaces required

    Credit Union requires 23 spaces, requires 1 accessible space. 2 provided

    Coffee shop requires 15 spaces, requires 1 accessible space. 1 provided

    See parking data on site plan for parking calculations.

Two copies of the revised TCL are attached with this letter as well as the trip generation. Should you have questions or need additional information, please contact me.

Sincerely,

Joe Slagle
SlagleHerr Architects

City of Albuquerque

Planning Department

Development & Building Services Division

DRAINAGE AND TRANSPORTATION INFORMATION SHEET

(REV 02/2013)

Project Title: Sandia Area Federal Credit Union Building Permit #: _____ City Drainage #: F22D002

DRB#: _____ EPC#: _____ Work Order#: _____

Legal Description: Tract C, New Holiday Park Subdivision

City Address: 11301 Montgomery Blvd. NE, Albuquerque, NM

Engineering Firm: Rio Grande Engineering Contact: David Soule

Address: 1606 Central Ave, SE, Suite 201 Albuquerque, NM 87106

Phone#: 505 872 0999 Fax#: _____ E-mail: david@riograndeengineering.com

Owner: Sandia Area Federal Credit Union Contact: Scott Connely

Address: 8000 Palomas Ave NE, Albuquerque, NM 87109

Phone#: 505 256 6000 Fax#: _____ E-mail: Scott.Connely @sandia .org

Architect: Slagle Herr Architects Inc. Contact: Joe Slagle

Address: 413 Second Street SW, Albuquerque, NM 87102

Phone#: 505 246 0870 Fax#: _____ E-mail: joe@slagleherr.com

Surveyor: Advantage Surveying Contact: Robert Guiterrez

Address: 804 Lead Avenue SW, Albuquerque NM 87102

Phone#: 505 243 1212 Fax#: _____ E-mail: _____

Contractor: N/A Contact: _____

Address: _____

Phone#: _____ Fax#: _____ E-mail: _____

TYPE OF SUBMITTAL:

____ DRAINAGE REPORT
____ DRAINAGE PLAN 1st SUBMITTAL
____ DRAINAGE PLAN RESUBMITTAL
____ CONCEPTUAL G & D PLAN
____ GRADING PLAN
____ EROSION & SEDIMENT CONTROL PLAN (ESC)
____ ENGINEER'S CERT (HYDROLOGY)
____ CLOMR/LOMR
X TRAFFIC CIRCULATION LAYOUT (TCL)
____ ENGINEER'S CERT (TCL)
____ ENGINEER'S CERT (DRB SITE PLAN)
____ ENGINEER'S CERT (ESC)
____ SO-19
____ OTHER (SPECIFY)

CHECK TYPE OF APPROVAL/ACCEPTANCE SOUGHT:

____ SIA/FINANCIAL GUARANTEE RELEASE
____ PRELIMINARY PLAT APPROVAL
____ S. DEV. PLAN FOR SUB'D APPROVAL
____ S. DEV. FOR BLDG. PERMIT APPROVAL
____ SECTOR PLAN APPROVAL
____ FINAL PLAT APPROVAL
____ CERTIFICATE OF OCCUPANCY (PERM)
____ CERTIFICATE OF OCCUPANCY (TCL/TEMP)
____ FOUNDATION PERMIT APPROVAL
____ BUILDING PERMIT APPROVAL
____ GRADING PERMIT APPROVAL
____ PAVING PERMIT APPROVAL
____ WORK ORDER APPROVAL
____ GRADING CERTIFICATION
____ SO-19 APPROVAL
____ ESC PERMIT APPROVAL
____ ESC CERT. ACCEPTANCE
____ OTHER (SPECIFY)

RECEIVED
FEB 09 2015
LAND DEVELOPMENT SECTION

WAS A PRE-DESIGN CONFERENCE ATTENDED: X Yes ____ No ____ Copy Provided

DATE SUBMITTED: 2-9-15 By: Joe Slagle

Requests for approvals of Site Development Plans and/or Subdivision Plats shall be accompanied by a drainage submittal. The particular nature, location, anc scope to the proposed development defines the degree of drainage detail. One or more of the following levels of submittal may be required based on the followin

1. **Conceptual Grading and Drainage Plan:** Required for approval of Site Development Plans greater than five (5) acres and Sector Plans
2. **Drainage Plans:** Required for building permits, grading permits, paving permits and site plans less than five (5) acres
3. **Drainage Report:** Required for subdivision containing more than ten (10) lots or constituting five (5) acres or more
4. **Erosion and Sediment Control Plan:** Required for any new development and redevelopment site with 1-acre or more of land disturbing area, including project less than 1-acre than are part of a larger common plan of development

CITY OF ALBUQUERQUE

Planning Department
Transportation Development Services

February 12, 2015

Joe Slagle
Slagle Herr Architects, Inc.
413 Second Street SW
Albuquerque, NM 87102

Re: Sandia Area Federal Credit Union, 11301 Montgomery Blvd. NE
Traffic Circulation Layout
Plan Dated 02-04-15 (F22-D002)

Dear Mr. Slagle:

Based upon the information provided in your submittal received 02-09-15, the above referenced plan cannot be approved for Building Permit until the following comments are addressed:

1. The proposed development looks like it may meet the threshold for a Traffic Impact Study based upon the combined square footage of the Sandia Area Credit Union building and the Starbucks. Provide a trip generation.
2. Please provide a zone atlas number for the vicinity map.
3. For the next submittal, provide the details for the curb, pavement section for the parking lot, handicapped ramp, and handicapped parking spot signage.
4. Identify adjacent street widths and right-of-way widths for Montgomery Boulevard and Cairo Drive. List the existing sidewalk widths for both streets.
5. Remove and replace the ramp on the northwest corner of the Cairo Drive/Montgomery Boulevard intersection to comply with more current ADA standards, and include the truncated domes. Design the ramp so that pedestrian traffic can easily access it across Cairo Drive and across Montgomery Boulevard. Construct the ramp around the existing mastarm using header curb so that you will not have to relocate it.
6. Remove the handicapped parking spot signage within the Cairo Drive right-of-way that is being unused.
7. Show where new on-site curb begins and ends. Differentiate between existing and new curb. It would be easier to show a different legend for the existing curb. Replace the existing ramps at the access off of Montgomery Boulevard to match current ADA standards and include the truncated domes.

PO Box 1293
Albuquerque
New Mexico 87103
www.cabq.gov

8. For Keyed Note 3, call out the necessary COA Standard Dwg. Number. Call out the necessary COA Standard Dwg. Numbers for any work within COA right-of-way as applicable. Be sure to include truncated domes for the curb ramps at the access off of Cairo Drive.

9. For curb called out for Keyed Note 23, show all curb radii. Show the 24-foot dimension width for the parking aisle on the north side of the parking lot east of the main parking aisle off of Montgomery Boulevard. Label curb radii for the access off of Montgomery Boulevard, even if this is meant to be existing and left alone.

10. List length of queues for both the credit union and the Starbucks. Show both the overall length and how many cars can be accounted for.

11. For the credit union, show widths of aisles in between the concrete islands called out in Note 11. Also, show striping for delineation between these aisles north of the islands for a certain distance until the drive necks down.

12. Provide a 6-foot wide ADA accessible connection from Starbucks to the existing street right-of-way. It is required to have a 6-foot ADA accessible pathway from the public right-of-way to the building entrances.

13. Include a minimum width of 8 feet wide for both van access aisles. The ADA van accessible sign must have the required language per 66-7-352.4C NMSA 1978 **"Violators Are Subject to a Fine and/or Towing."** Include an accessible signage detail for the next submittal showing this language.

14. The words **"NO PARKING"** for each of the van accessible aisles should be at least one foot high and at least two inches wide. Call out these dimensions within a keyed note.

15. A design delivery vehicle route needs to be shown from the public right-of-way and through the parking lot for the two new facilities.

16. "Do Not Enter" signage is required at the end of the driving aisles for the drive-thrus at both on-site facilities.

17. The wheelchair ramp called out by Keyed Note 29 needs to have a minimum 4 foot by 4 foot level surface landing at the top of the ramp for wheelchair turning.

18. Please provide a sight distance exhibit for the drive onto Montgomery Blvd. (see the *Development Process Manual, Chapter 23, Section 3, Page 23-28, Part D.5 Intersection Sight Distance*).

    Please add the following note to this clear sight triangle: "Landscaping and signage will not interfere with clear sight requirements. Therefore, signs, walls, trees, and shrubbery between 3 and 8 feet tall (as measured from the gutter pan) will not be acceptable in this area."

19. Please provide a sight distance exhibit for the drive onto Montgomery Blvd. (see the *Development Process Manual, Chapter 23, Section 3, Page 23-28, Part D.5 Intersection Sight Distance*).

CITY OF ALBUQUERQUE

Please add the following note to this clear sight triangle: "Landscaping and signage will not interfere with clear sight requirements. Therefore, signs, walls, trees, and shrubbery between 3 and 8 feet tall (as measured from the gutter pan) will not be acceptable in this area."

20. For the drive on to Cairo Drive, provide a mini clear sight triangle as per Page 23-74 of the Development Process Manual. For this location, also add the following note to this clear sight triangle: "Landscaping and signage will not interfere with clear sight requirements. Therefore, signs, walls, trees, and shrubbery between 3 and 8 feet tall (as measured from the gutter pan) will not be acceptable in this area."

21. For required spaces of between 36 to 50 spaces, 3 accessible parking spaces are required (NMBC Table 1106.1). Therefore, a total of 3 spaces would be required for Starbucks, and 3 spaces would be required for the credit union.

22. Please submit two copies of the Traffic Circulation Layout for the next submittal.

PO Box 1293

Albuquerque

New Mexico 87103

www.cabq.gov

Resubmit acceptable package along with fully completed Drainage Transportation Information Sheet to front counter personnel for log in and evaluation by Transportation. If you have any questions, please contact me at (505) 924-3924.

Sincerely,

Jeanne Wolfenbarger, P.E.
Senior Engineer, Planning Dept.
Development Review Services

c: File
CO Clerk

CITY OF ALBUQUERQUE

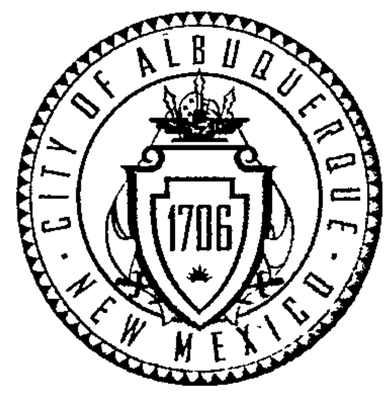

Planning Department
Transportation Development Services

February 12, 2015

Joe Slagle
Slagle Herr Architects, Inc.
413 Second Street SW
Albuquerque, NM 87102

Re: Sandia Area Federal Credit Union, 11301 Montgomery Blvd. NE
Traffic Circulation Layout
Plan Dated 02-04-15 (F22-D002)

Dear Mr. Slagle:

Based upon the information provided in your submittal received 02-09-15, the above referenced plan cannot be approved for Building Permit until the following comments are addressed:

1. The proposed development looks like it may meet the threshold for a Traffic Impact Study based upon the combined square footage of the Sandia Area Credit Union building and the Starbucks. Provide a trip generation.
2. Please provide a zone atlas number for the vicinity map.
3. For the next submittal, provide the details for the curb, pavement section for the parking lot, handicapped ramp, and handicapped parking spot signage.
4. Identify adjacent street widths and right-of-way widths for Montgomery Boulevard and Cairo Drive. List the existing sidewalk widths for both streets.
5. Remove and replace the ramp on the northwest corner of the Cairo Drive/Montgomery Boulevard intersection to comply with more current ADA standards, and include the truncated domes. Design the ramp so that pedestrian traffic can easily access it across Cairo Drive and across Montgomery Boulevard. Construct the ramp around the existing mastarm using header curb so that you will not have to relocate it.
6. Remove the handicapped parking spot signage within the Cairo Drive right-of-way that is being unused.
7. Show where new on-site curb begins and ends. Differentiate between existing and new curb. It would be easier to show a different legend for the existing curb. Replace the existing ramps at the access off of Montgomery Boulevard to match current ADA standards and include the truncated domes.

PO Box 1293
Albuquerque
New Mexico 87103
www.cabq.gov

8. For Keyed Note 3, call out the necessary COA Standard Dwg. Number. Call out the necessary COA Standard Dwg. Numbers for any work within COA right-of-way as applicable. Be sure to include truncated domes for the curb ramps at the access off of Cairo Drive.

9. For curb called out for Keyed Note 23, show all curb radii. Show the 24-foot dimension width for the parking aisle on the north side of the parking lot east of the main parking aisle off of Montgomery Boulevard. Label curb radii for the access off of Montgomery Boulevard, even if this is meant to be existing and left alone.

10. List length of queues for both the credit union and the Starbucks. Show both the overall length and how many cars can be accounted for.

11. For the credit union, show widths of aisles in between the concrete islands called out in Note 11. Also, show striping for delineation between these aisles north of the islands for a certain distance until the drive necks down.

12. Provide a 6-foot wide ADA accessible connection from Starbucks to the existing street right-of-way. It is required to have a 6-foot ADA accessible pathway from the public right-of-way to the building entrances.

13. Include a minimum width of 8 feet wide for both van access aisles. The ADA van accessible sign must have the required language per 66-7-352.4C NMSA 1978 **"Violators Are Subject to a Fine and/or Towing."** Include an accessible signage detail for the next submittal showing this language.

14. The words **"NO PARKING"** for each of the van accessible aisles should be at least one foot high and at least two inches wide. Call out these dimensions within a keyed note.

15. A design delivery vehicle route needs to be shown from the public right-of-way and through the parking lot for the two new facilities.

16. "Do Not Enter" signage is required at the end of the driving aisles for the drive-thrus at both on-site facilities.

17. The wheelchair ramp called out by Keyed Note 29 needs to have a minimum 4 foot by 4 foot level surface landing at the top of the ramp for wheelchair turning.

18. Please provide a sight distance exhibit for the drive onto Montgomery Blvd. (see the *Development Process Manual, Chapter 23, Section 3, Page 23-28, Part D.5 Intersection Sight Distance*).

    Please add the following note to this clear sight triangle: "Landscaping and signage will not interfere with clear sight requirements. Therefore, signs, walls, trees, and shrubbery between 3 and 8 feet tall (as measured from the gutter pan) will not be acceptable in this area."

19. Please provide a sight distance exhibit for the drive onto Montgomery Blvd. (see the *Development Process Manual, Chapter 23, Section 3, Page 23-28, Part D.5 Intersection Sight Distance*).

Please add the following note to this clear sight triangle: "Landscaping and signage will not interfere with clear sight requirements. Therefore, signs, walls, trees, and shrubbery between 3 and 8 feet tall (as measured from the gutter pan) will not be acceptable in this area."

20. For the drive on to Cairo Drive, provide a mini clear sight triangle as per Page 23-74 of the Development Process Manual. For this location, also add the following note to this clear sight triangle: "Landscaping and signage will not interfere with clear sight requirements. Therefore, signs, walls, trees, and shrubbery between 3 and 8 feet tall (as measured from the gutter pan) will not be acceptable in this area."

21. For required spaces of between 36 to 50 spaces, 3 accessible parking spaces are required (NMBC Table 1106.1). Therefore, a total of 3 spaces would be required for Starbucks, and 3 spaces would be required for the credit union.

22. Please submit two copies of the Traffic Circulation Layout for the next submittal.

PO Box 1293

Albuquerque

New Mexico 87103

www.cabq.gov

Resubmit acceptable package along with fully completed Drainage Transportation Information Sheet to front counter personnel for log in and evaluation by Transportation. If you have any questions, please contact me at (505) 924-3924.

Sincerely,

Jeanne Wolfenbarger, P.E.
Senior Engineer, Planning Dept.
Development Review Services

c: File
CO Clerk

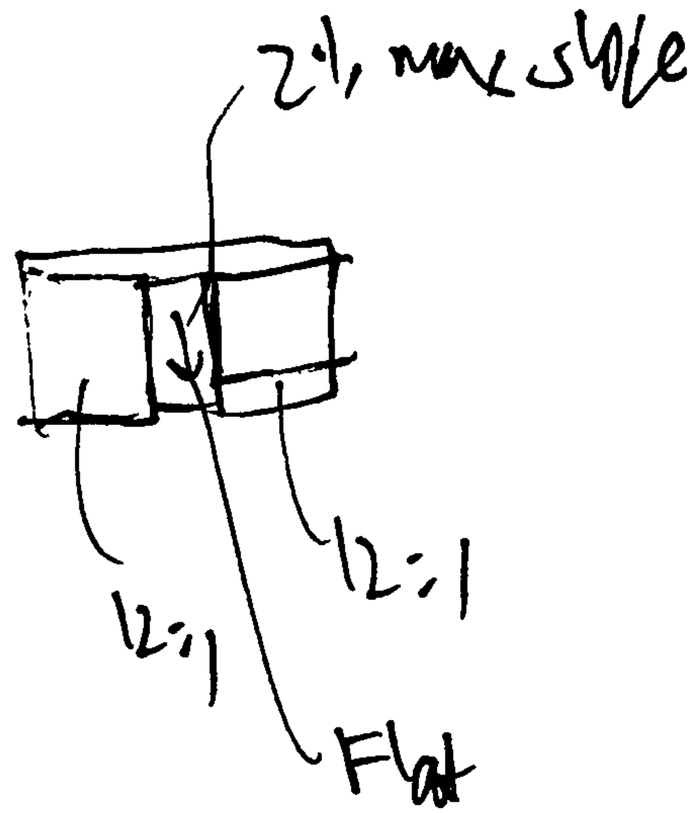
2:1, max slope
12:1
12:1
Flat

slagleherr

Notes

March 2, 2015

Jeanne Wolfenbarger, P.E.
Senior Engineer, Planning Dept.
Development Review Services

Re: Sandia Area Federal Credit Union, 11301 Montgomery Blvd, NE.
Traffic Circulation Layout
Plan dated 02-04-15 (F22-D002)

Ms. Wolfenbarger,

The following is a list of our method of addressing your comments for our original submittal per your letter dated Feb. 12, 2015.

1. We have engaged Terry Brown to provide us with a Traffic Study per his discussion with you.
2. The zone atlas page number has been added to the vicinity map.
3. Sheet A002 has been included in this re-submittal. This sheet contains all site details.
4. The R.O.W. widths for Montgomery and Cairo have been added to the site plan. The sidewalk widths bordering the subject property have also been added to the site plan.
5. The site plan has been revised to show a new ADA ramp at the NW corner of the Montgomery/Cairo intersection. The keyed note has also been revised to accurately describe the new ramp.
6. A note has been added (key note 40) calling out to remove the existing HCP parking signs.
7. The site plan has been revised to show existing construction in a lighter line, and the new construction in the right-of-way has been hatched to further clarify. The existing ramps at the Montgomery entrance are now shown to be removed and new ramps installed at the new crosswalk location.
8. Note 3 has been revised to call out COA drawing numbers, and includes the requirement for truncated domes.
9. The curves on the temporary curb as described in keynote 23 have been noted to show radii.
10. The queue length has been added to the site plan. Cars are shown as well for reference.
11. The drive through lane widths have been added to the site plan as well as stripes north of the islands.
12. A 6' wide walkway is shown on the site plan west of the Starbuck's building which leads along the entrydrive and crosses the starbucks parking lot on the north side. From here, one can reach the entry. This route was chosen because the grade changes in this area are severe and a closer route by ramp is not feasable. The wall on the east side of the 6' walkway is a retaining wall. I would be glad to discuss this in further detail if required.

413 second street sw
albuquerque new mexico 87102
505 246 0870 slagleherr.com

13. The van accessible lanes are now shown to be 8' wide at both buildings. The requested language has been added to the hcp sign detail: 3/A002
14. The words "NO PARKING" have been added to the van accessible aisles on the site plan.
15. A delivery vehicle route has been added to the site plan. Dashed line with notation "delivery route" and "drop off area".
16. Painted letters reading "ONE WAY-DO NOT ENTER" have been added to the site plan at both drive through lane exit areas. (key note 43)
17. The wheelchair ramp at the south side of the credit union building has been modified to be a linear ramp, and the detail key at keynote 29 has been changed to 6/A002.
18. The clear sight triangle has been added at the drive onto Montgomery and keynote 44 includes the requested text.
19. This comment is the same as comment 18.
20. mini clear site triangles per Section 6.B.12 of the DPM have been added at the Cairo driveway, and noted per keynote 44.
21. The required number of accessible parking spaces is based on the total number of required parking spaces, not parking spaces provided. This requirement is also described in the City of Albuquerque Zoning Ordinance Section 14-16-3-1.Per these regulations the requirements are as follows:
    * 1-25 spaces required: 1 accessible space required
    * 26-35 spaces required: 2 accessible spaces required
    * 36-50 spaces required: 3 accessible spaces required

    Credit Union requires 23 spaces, requires 1 accessible space. 2 provided
    Coffee shop requires 15 spaces, requires 1 accessible space. 1 provided

    See parking data on site plan for parking calculations.

Two copies of the revised TCL are attached with this letter as well as the trip generation. Should you have questions or need additional information, please contact me.

Sincerely,

Joe Slagle
SlagleHerr Architects

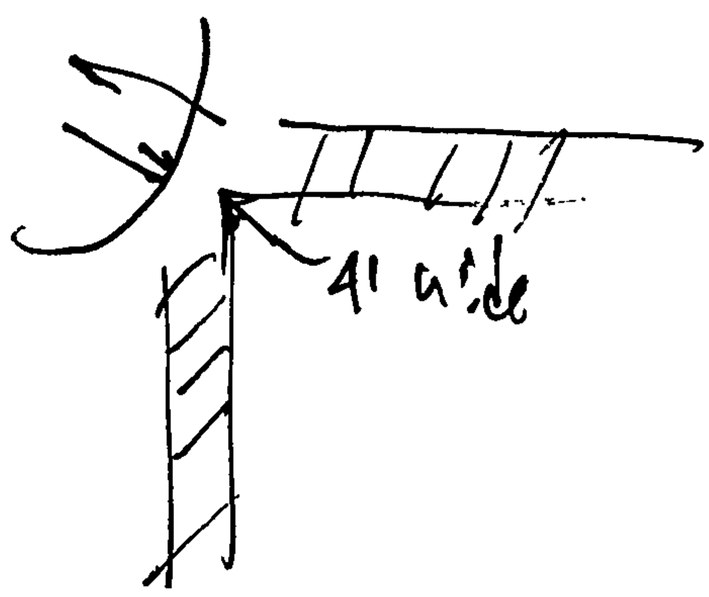
41' wide