[redacted]

AVID ENGINEERING, INC.

RECEIVED
FEB 1 1 1993
HYDROLOGY DIV

DRAINAGE REPORT
FOR
LADERA WEST SUBDIVISION

PREPARED FOR:

CURB, INC.
9806 GREENBRIAR, NE
ALBUQUERQUE, NM 87111

PREPARED BY:

AVID ENGINEERING, INC.
6100 SEAGULL LANE NE
SUITE 102
ALBUQUERQUE, NM 87109

AUGUST 1992
REVISED, JANUARY 1993

DRAINAGE INFORMATION SHEET

PROJECT TITLE: LADERA WEST ZONE ATLAS/DRAINAGE FILE # G-10/D8A

LEGAL DESCRIPTION: EL RANCHO ATRISCO DE LOS SANTOS

CITY ADDRESS: TODOS SANTOS STREET, NORTH OF OURAY

ENGINEERING FIRM: AVID ENGINEERING CONTACT: RICK BELTRAMO

ADDRESS: 6100 SEAGULL NE #102 PHONE: 881-5357

OWNER: CURB, INC CONTACT: CHUCK HAEGELIN

ADDRESS: 9806 GREENBRIAR NE PHONE: 821-8718

ARCHITECT: NONE CONTACT: ____

ADDRESS: ____ PHONE: ____

SURVEYOR: AVID ENGINEERING CONTACT: RUAN BACIGALUPA

ADDRESS: 6100 SEAGULL NE PHONE: 881-5357

CONTRACTOR: ____ CONTACT: ____

ADDRESS: ____ PHONE: ____

PRE-DESIGN MEETING:

X YES

___ NO

X COPY OF CONFERENCE RECAP SHEET PROVIDED

DRB NO. DRB-92-0210

EPC NO. Z-92-42

PROJECT NO. 4450.90

TYPE OF SUBMITTAL:

X DRAINAGE REPORT

___ DRAINAGE PLAN

___ CONCEPTUAL GRADING & DRAIN PLAN

___ GRADING PLAN

___ EROSION CONTROL PLAN

___ ENGINEER'S CERTIFICATION

CHECK TYPE OF APPROVAL SOUGHT:

___ SECTOR PLAN APPROVAL

___ SKETCH PLAT APPROVAL

___ PRELIMINARY PLAT APPROVAL

___ SITE DEVELOPMENT PLAN APPROVAL

X FINAL PLAT APPROVAL

___ BUILDING PERMIT APPROVAL

___ FOUNDATION PERMIT APPROVAL

___ CERTIFICATE OF OCCUPANCY APPROVAL

X ROUGH GRADING PERMIT APPROVAL

___ GRADING/PAVING PERMIT APPROVAL

X OTHER W.O. (SPECIFY).

DATE SUBMITTED: 2/10/93

BY: RICK BELTRAMO

REV. 10/85

CITY OF ALBUQUERQUE
PUBLIC WORKS DEPARTMENT
UTILITY DEVELOPMENT DIVISION/HYDROLOGY SECTION

PRE-DESIGN CONFERENCE

DRAINAGE FILE/ZONE ATLAS PAGE NO.: G10 DATE: 5/8/92

EPC NO.: _____ DRB NO.: _____ ZONE: _____

SUBJECT: LADERA WEST (FORMERLY EL RANCHO DE LOS SANTOS)

STREET ADDRESS: _____

LEGAL DESCRIPTION: _____

APPROVAL REQUESTED:

____	PRELIMINARY PLAT	____	FINAL PLAT
____	SITE DEVELOPMENT PLAN	____	BUILDING PERMIT
____	GRADING/PAVING PERMIT	X	OTHER DRC/VACATION/PARTIAL REPOST

ATTENDANCE:	WHO	REPRESENTING
	JIM DOMNICK	
	KAREN MARCOTTE	
	STAN STRICKLAND	

FINDINGS:

- AN UPDATED DRAINAGE REPORT WILL BE REQUIRED FOR DRC SIGN-OFF/VACATION APPROVAL/PRELIMINARY AND/FINAL SIGN
- RECOMMEND THE STREET SYSTEM BE USED TO CONVEY THE DEVELOPED FLOWS TO THE LADERA SYSTEM.
- OFF-SITE FLOWS WILL NEED TO BE QUANTIFIED AND A SYSTEM DESIGNED TO DIVERT SUCH FLOWS TO THE LADERA SYSTEM. THE REPORT WILL NEED TO ADDRESS IF THE DIVERSION SHOULD BE DESIGNED FOR DEVELOPED FLOW CONDITION OR HISTORIC.
- DOWNSTREAM CAPACITY ~~BETWEEN~~ ANALYSIS REQUIRED BETWEEN THIS DEVELOPMENT THE CONCRETE LINED CHANNELS.

The undersigned agrees that the above findings are summarized accurately and are only subject to change if further investigation reveals that they are not reasonable or that they are based on inaccurate information.

SIGNED:	[signature]	SIGNED:	[signature]
TITLE:		TITLE:	
DATE:	5/8/92	DATE:	5/8/92

NOTE PLEASE PROVIDE A COPY OF THIS PRE-DESIGN FORM WITH THE DRAINAGE SUBMITTAL.

TABLE OF CONTENTS

	PAGE
PRE-DESIGN CONFERENCE	i
DRAINAGE INFORMATION SHEET	ii
INTRODUCTION AND PROJECT DESCRIPTION	1
PURPOSE AND SCOPE	1
SITE LOCATION AND DESCRIPTION	1
EXISTING DRAINAGE CONDITIONS	5
PROPOSED DRAINAGE PLAN	10
PHASING PLAN	11
SUMMARY	12
RECOMMENDATIONS	12
REFERENCES	13
APPENDIX A - COMPUTATIONS DOWNSTREAM CAPACITY UNDEVELOPED FLOWS DEVELOPED FLOWS	

LIST OF FIGURES AND EXHIBITS

		PAGE
FIGURE I	LOCATION MAP	2
FIGURE II	FLOODPLAIN MAP	3
FIGURE III	SOILS MAP	4
FIGURE IV	BASINS DRAINING TO QUICKWATER CHANNEL	7
EXHIBIT I	OFFSITE DRAINAGE PLAN	
EXHIBIT II	ONSITE DRAINAGE PLAN	
EXHIBIT III	UNIT I DRAINAGE PLAN	

INTRODUCTION AND PROJECT DESCRIPTION

This document is the drainage report for a Ladera West subdivision. Ladera West is a proposed R-1 subdivision which is part of the existing El Rancho Atrisco de Los Santos Subdivision. The development is on Albuquerque's west mesa, as shown on Figure I (Vicinity Map). It will consist of approximately 68 single family (R-1) lots when fully developed, and will be constructed in two phases.

El Rancho Atrisco de los Santos is currently a platted subdivision, but it does not have infrastructure bonded or constructed. The plat was recorded prior to the requirement to bond infrastructure. The previous platting contained lots which do not conform to current R-1 standards, and it also includes drainage easements for detention ponds, which are not in accordance with present City policy. The owner is planning to replat approximately half of the subdivision to conform to current R-1 standards. The environmental Planning Commission recently approved a change in zoning to R-1 for the site (it was previously zoned SU-1 for townhomes).

PURPOSE AND SCOPE

The purpose of this Drainage Report is to provide a graphic and written presentation of the proposed grading, drainage and erosion control criteria for the proposed Ladera West subdivision. The proposed drainage improvements are to be developed in a manner which is in accordance with the regulations of the City of Albuquerque and the Albuquerque Metropolitan Arroyo Flood Control Authority (AMAFCA). The plan studies the existing and developed conditions of Ladera West and analyzes the 100-year, 6-hour storm.

The plan includes the sizing and capacity analysis for the roads and other drainage facilities needed for the development, including the downstream facilities. Preliminary lot grading is included for both Units I and II.

SITE LOCATION AND DESCRIPTION

Ladera West is located on the west mesa of Albuquerque, west of the Ladera golf course and east of Unser Boulevard. The site is bounded on the south by Ouray Boulevard and on the north by the extension of Vista Alegre Street. Immediately west of the site is a 200 foot PNM easement and a 50 foot public drainage easement, which are within an undeveloped parcel currently controlled by the Resolution Trust Corporation. The El Rancho Atrisco Unit 10 subdivision is immediately east of the site, and there is a 200 foot PNM easement along the eastern boundary of Ladera west, separating it from Tract 7-A, El Rancho Atrisco Phase II. Figure I is a map showing the vicinity of the project.

Exhibit I and Figure IV show the location of the site relative to other drainage features and basins.

The unimproved areas of the site are vegetated with typical native grasses and shrubs. The project site slopes generally to the southeast at an average slope of 2%. There are no major drainageways or arroyos passing through the project.

On-site soils consist of Bluepoint Loamy Sands, which are classified by the Soil Conservation Service as hydrologic group "A" soils. The soils units are described by SCS as follows:

> **BCC - Bluepoint loamy fine sand, 1 to 9 percent slopes.** This soil is nearly level to moderately sloping. It has the profile described as representative of the series, but on about ten percent of the acreage the surface area is sand. Included in mapping are areas of Madurez, Pajarito, and Wink soils, which make up about 15 percent of the unit.
>
> Runoff is slow, and the hazard of soil blowing is severe.
>
> This soil is used for range, watershed, wildlife habitat, recreation and community development. Dryland capability subclass VII; native plant community 2.

Figure III is a reproduction of the SCS soils maps showing the location of the various soils units within the subdivision.

EXISTING DRAINAGE CONDITIONS

A. PROJECT SITE AND ADJACENT OFFSITE BASIN

The Ladera West site is protected from offsite flows originating west of Unser Boulevard by the storm drainage facilities constructed with the highway in 1991 and 1992. The land immediately west of the proposed development is currently owned by the federal Resolution Trust Corporation (RTC). It is zoned for high density residential use (apartments).

The undeveloped site to the east currently drains across the project site to the PNM easement along the east side of Ladera west. This offsite area flows to the southwest and ultimately to the Quickwater channel. The Quickwater channel is an improved facility which passes under Rhonda del Lechusas street and eventually discharges to the Ladera detention facility.

The FEMA floodplain maps show that lots 1A, 2A, 3A and 4A are encumbered by a floodplain and within the Ouray Street Right of way immediately south of the site, but storm drains have been constructed within the street to alleviate that potential for flooding. Figure II shows the FEMA flood map. The FEMA maps do not recognize the Ouray Storm Drain. Lots encumbered by the floodplain will not meet FHA criteria. A submittal will be made to FEMA for a letter of map revision, recognizing the Ouray Storm Drain.

The peak flow from the offsite basin to the west is 26 cfs. This runoff combines with the runoff from the project site to enter the Quickwater channel. The combined undeveloped runoff from the two sites is 55 cfs, and the peak flow originating from Ladera West is 30 cfs.

B. CAPACITY ANALYSIS OF THE QUICKWATER CHANNEL

The Quickwater Channel is the ultimate outfall for both the undeveloped, as well as the proposed developed flows from the project area. City staff has requested an analysis of the capacity of this channel to determine its ability to carry developed flows from Ladera West and other sites in the basin.

The Quickwater Channel is located in El Rancho Atrisco, just north of Ouray Road and west of the Ladera Golf Course Detention Basin. It carries runoff from basins to the west into the Ladera Detention Basin. The channel was originally designed to carry runoff from the northern portion of El Rancho Atrisco. The channel is earth lined, with some areas of rip-rap. Rhonda del Lechusas Street crosses the channel, and culverts carry flow under the street.

The Quickwater Channel was originally constructed to carry runoff from the northern portion of El Rancho Atrisco, under the El Rancho Atrisco Sector Plan. That plan includes the site of the proposed development. As part of the development of the Ladera West subdivision, we propose to discharge runoff into the Quickwater Channel. The project site presently drains into the Quickwater, but development of the site will increase the impervious area, and hence will increase the runoff into the channel. Because of concerns about the Quickwater Channel's capacity to conduct the additional runoff, an analysis was performed. The drainage reports for the contributing areas were reviewed, and the peak flow rates for developed conditions were derived from them. Hydrographs were developed for each of the basins using the methods presented in the DPM. These hydrographs were then entered into the AHYMO model, which was used to route and combine them to determine the peak flow rate at the channel. This analysis demonstrated that the combined flows can be safely conducted into the Quickwater channel. should the culverts not be able to carry a storm event, the crossing structure is designed to pass flow over the roadway without flooding adjacent properties.

CHANNEL CAPACITY

First, an analysis was performed to determine the existing capacity of the Quickwater Channel. Where possible, the as-builts for the channel were examined, and where none were available, the original designs were examined. The Quickwater contains several major structures that could limit capacity, so the capacity of those structures was analyzed. First, the capacity of the channel itself was analyzed. Next, the culvert pipes under Rhonda de Lechusas Street were analyzed. Finally, the Quickwater contains two energy dissipators

upstream of Rhonda de Lechusas which were analyzed. The analysis is summarized below, and computations are in Appendix A.

The Quickwater channel is trapezoidal and is earth-lined for most of its length, with areas of rip-rap and concrete near Rhonda de Lechusas and the energy dissipators. The earth lining has some areas containing overgrown vegetation. Manning's equation was used to estimate the existing capacity of the channel, which was calculated as 980 cfs.

Second, the culvert pipes under Rhonda de Lechusas street were analyzed. The crossing consists of five, 42" diameter corrugated metal pipes. Since no as-built could be found, the capacity was checked two ways: the original design was examined, and an analysis based on existing conditions was performed. The culverts were originally designed for 300 cfs. The analysis based on existing conditions gives a capacity of approximately 360 cfs. The actual capacity is estimated to be within that range.

Finally, the energy dissipators upstream of the culverts were analyzed. The energy dissipators consist of concrete weirs, 1'-6" high, with a downstream spillway and a stilling basin with chute blocks and baffle piers. The weirs are notched to release trickle flows. The structures were analyzed as weirs, and the capacity of the dissipators was calculated as 1,100 cfs.

In conclusion, the culverts under Rhonda de Lechusas limit the maximum capacity of the Quickwater channel to approximately 360 cfs, before flow overtops the roadway at which time the structure passes substantially greater flow rates.

ANALYSIS OF CAPACITY AND PEAK FLOWS

In general, in the area of the proposed development, the ground slopes from west to east, toward the Ladera Golf Course Detention Basin. The Quickwater channel carries runoff from basins to the west into the Ladera Detention Basin. As mentioned previously, the Quickwater was originally sized to carry runoff from the northern part of El Rancho Atrisco, which includes the proposed project site. Presently, the Quickwater carries runoff from several basins in the northern part of El Rancho Atrisco (see Figure IV). The major contributing areas are: El Rancho Atrisco Units 2,3,7,8,9, and 10, Unser Blvd. and basins to the west of Unser, the Volcano Business Park, and El Rancho Atrisco Tracts 6 and 7, which includes the site of the proposed Ladera West subdivision. Since the capacity of the culverts under Rhonda de Lechusas restricts the capacity of the channel, only the basins contributing flow to the Quickwater channel above Rhonda de Lechusas were considered.

The drainage reports from basins contributing runoff to the Quickwater above Rhonda de Lechusas were reviewed to determine 1) basin area, 2) time of concentration, and 3) 100 year peak flow under developed conditions. Information regarding the peak flow rates derived from the reports, hydrograph calculations and routing are shown in detail in Appendix A.

Offsite flows originating immediately west of the project site were analyzed using a previous study and master drainage plan prepared for the site by Resources Technology, Inc. (RTI). That plan established the existing conditions, and also presents conceptually the

possible discharge point and flow rates under the developed conditions.

Total hydrographs for all the contributing basins were evaluated for the developed condition for both offsite and project flows. The flow through the culverts was found to be approximately 339 cfs with the proposed development. The culverts's maximum capacity is approximately 360 cfs. In conclusion, the Quickwater Channel can safely handle the increased flow from the Ladera West subdivision.

PROPOSED DRAINAGE PLAN

This section of the report describes the plan for handling the drainage for Ladera West under the fully built-out condition. It includes the hydrology and hydraulics of the street and storm drain network which will collect the runoff and convey it to the outfall.

OFFSITE FLOWS

Under ultimate development conditions, existing plans show no offsite flows entering the Ladera West property. The only area which drains to the site now is the tract to the west (Basin B-1A) which is planned for high-density residential development. This development will significantly increase the runoff from the site, and drainage infrastructure will be needed to convey the developed runoff to an acceptable outfall. The RTI plan for the site shows the planned drainage for the site discharging directly to the storm drain in Ouray.

Infrastructure will be needed to protect Ladera West from the undeveloped flows from the future apartment site prior to its development. Until Basin B-1A is developed, runoff from the site will drain naturally to the Ladera West site. The existing plat shows a 50 foot wide drainage easement on the apartment site and adjacent to (west of) Ladera West. However, a recent title search has shown that the easement is not recorded and therefore does not legally exist. Therefore, the existing flows will have to be conveyed through the Ladera West Subdivision.

The existing flows for Basin B-1A will be collected in an inlet in a drainage easement to be dedicated on the west edge of the Ladera West property. This easement will be located on the west property line, at the west extension of Santa Catarina Court. The existing flows will be carried from that point in an underground storm drain to another storm drain in Todos Santos Street, where it will combine with the onsite runoff from the subdivision, and ultimately discharge to the Quickwater Channel. **The storm drain for offsite flows will be sized for existing conditions only, and future development will be required to limit discharges to the system to 26 cfs.**

Residential lots along the west boundary will be protected from erosion by the offsite flows by the construction of a short floodwall along the western property line. This wall will be constructed of reinforced concrete or concrete block with rebar and concrete in the cells. The wall will have a minimum height of two feet above existing grade. The location and height of the floodwall is shown on Exhibit III.

The natural low point of Basin B-1A is immediately west of Santa Catarina Court, as shown on Exhibit III. At this point, an easement will be dedicated as shown on the exhibit, and an inlet will be constructed to collect the existing runoff and convey it in the storm drain. The inlet design will have an overflow weir with additional openings to accommodate small flows.

ON-SITE FLOWS

Developed conditions are designed such that all runoff is directed to the Quickwater channel by way of the streets and an underground storm drain in Todos Santos Street. Due to the increased impervious area, peak flow will increase to 30 cfs, from the undeveloped rate of 7 cfs. Lots will drain to the streets in accordance with City and FHA criteria. Todos Santos Street will have a sump at approximately the intersection with Santa Catarina Court, and the runoff will discharge to the storm drain at this point. The storm drain collects flow at the low point an Todos Santo into a 42' SD, at the back property line the storm drain transitions to a 36" RCP and then outfalls directly to the quickflow channel. The outfall connection is through the exixying drop structure. Details for the connection are shown on the Drainage Detail Sheet.

The outfall storm drain exists the subdivsion on Lot 139-A. An overflow channel is designed which can carry the 100 year design flow rate. The overflow channel consists of an earthen retangular channel defined by a CMV garden wall on the north propeerty line and a 1.0 ft high cut-off wall on the south side. Wrought iron gates are used to cross the channel at the backyard subdivision wall and the sideyard subdivision wall. The storm drain and channel are both within a Public drainage easement.

A hydraulic grade line analysis was performed on the storm drain. The HGL is started at 28.8 in depth (.8D) above the invert of the 36" outlet pipe. This depth is greater then the 100 yeaar flow depth in the channel and therefor controls. The analysis indicates a satisfactory HGL, and computations are included in Appendix A.

Existing and developed flow rates within Ladera West are from the RTI report, to be consistent with the other hydrology for the area. These flows were developed using currently accepted DPM methodology. Computations are included in Appendix A.

PHASING PLAN

The developer plans to proceed with development in two phases of construction. The phase I subdivision (Ladera West Unit I) is shown in relation to the overall development in Exhibit III. A temporary diversion of the upland flows will be constructed slightly to the north of the end of Unit I with that project, as shown on Exhibit III. This will be to intercept any offsite flows which drain naturally to the north boundary of Unit I.

Since Unit I is the downstream part of the project and contains the storm drainage

outfall, no other interim drainage measures are needed. The only infrastructure required for Unit II will be the extension of the floodwall north along the west boundary to Vista Alegre Street. The facilities to be constructed with both subdivision units are shown on Exhibit II.

SUMMARY

1. Ladera West subdivision is being developed in conformance with current City standards.

2. The downstream facilities are adequate to carry the runoff from the proposed development to the Ladera system. Therefore, no detention or retention of runoff is needed.

RECOMMENDATION

1. That this document serve as the basis for approval of the preliminary plat for Ladera West Subdivision, Units I and II.
2. Outfall to the quickflow channel via a storm drain line is the preferred method and alignment.
3. More detailed grading plans will be required to obtain approval for final grading of Unit II.

REFERENCES

DEVELOPMENT PROCESS MANUAL, VOLUME II, City of Albuquerque, Chapter 22

SOIL SURVEY OF BERNALILLO COUNTY, NEW MEXICO, U.S. Soil Conservation Service

ALBUQUERQUE MASTER DRAINAGE STUDY, VOLUME II, Bohannan-Huston Inc.

HYDROLOGIC MODELING AND DRAINAGE CRITERIA - USING THE AHYMO COMPUTER PROGRAM, Short Course Manual, UNM, 1992

DRAINAGE MANAGEMENT PLAN FOR EL RANCHO ATRISCO PHASE III, Denney-Tibljas-McLean & Associates, Inc., 1986.

DRAINAGE ANALYSIS REPORT, UNSER BOULEVARD FROM LADERA DRIVE TO DELLYNE AVENUE, Greiner Engineering Sciences, Inc., 1985.

DRAINAGE REPORT FOR EL RANCHO ATRISCO TRACT 2, LADERA DRIVE, OURAY ROAD, T.T. Burnett Engineering, Inc., 1978.

DRAINAGE REPORT FOR TRACT 4X, 6X and 7X,EL RANCHO ATRISCO, ALBUQUERQUE, NM , Resources Technology, Inc., April, 1985

DRAINAGE PLAN OF VOLCANO BUSINESS PARK, Leverton-Easterling, Inc., 1984.

DRAINAGE REPORT FOR EL RANCHO ATRISCO UNIT 8, 1981.

APPENDIX A

COMPUTATIONS

AVID ENGINEERING, INC.

DOWNSTREAM CAPACITY ANALYSIS

PROJECT NAME _____ SHEET _____ OF _____

PROJECT NO. _____ BY _____ DATE _____

SUBJECT _____ CH'D _____ DATE _____

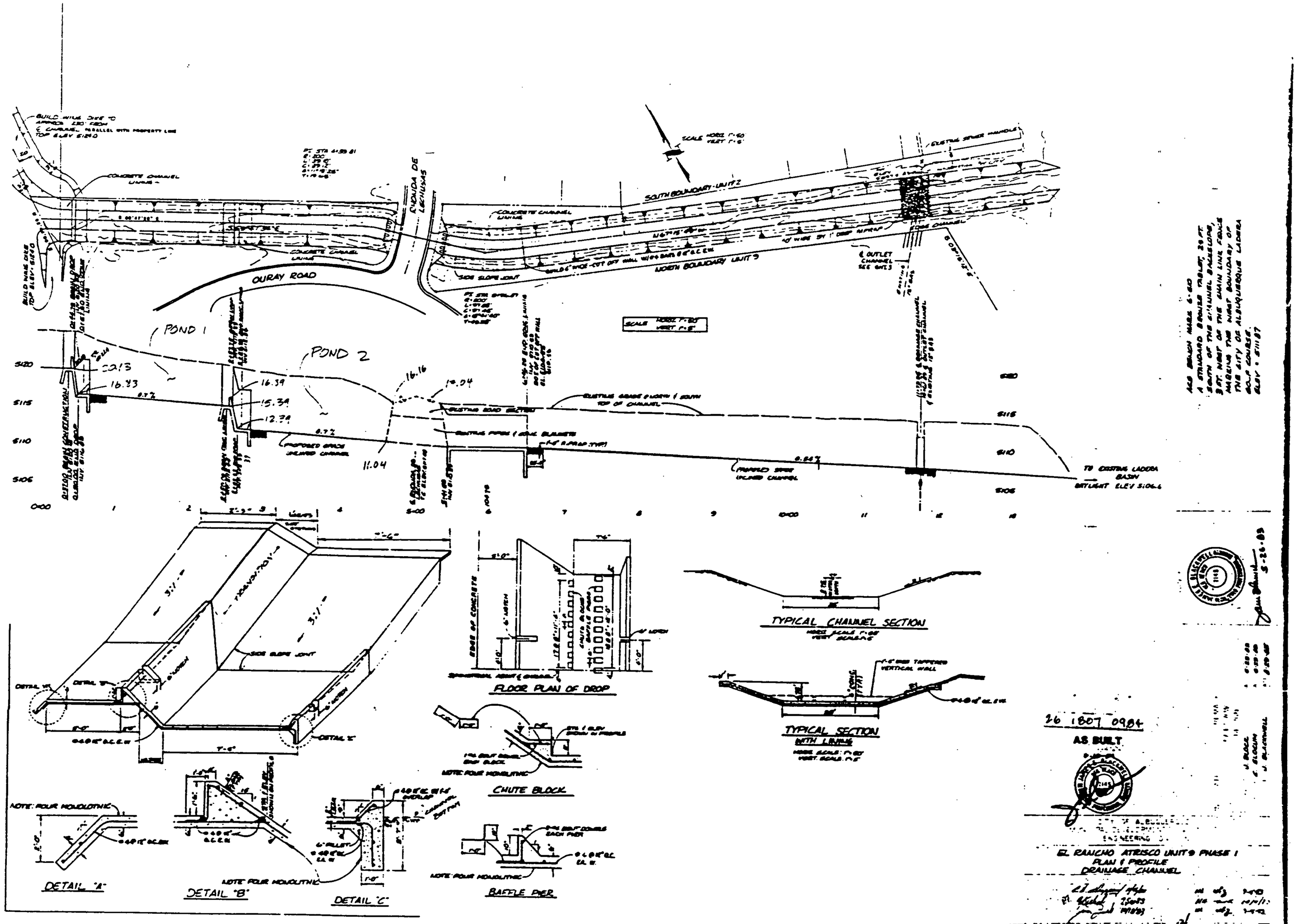

QUICKWATER CHANNEL AS-BUILT

AVID ENGINEERING, INC.

Calculate capacity of Quick Water channel

① Check channel capacity:

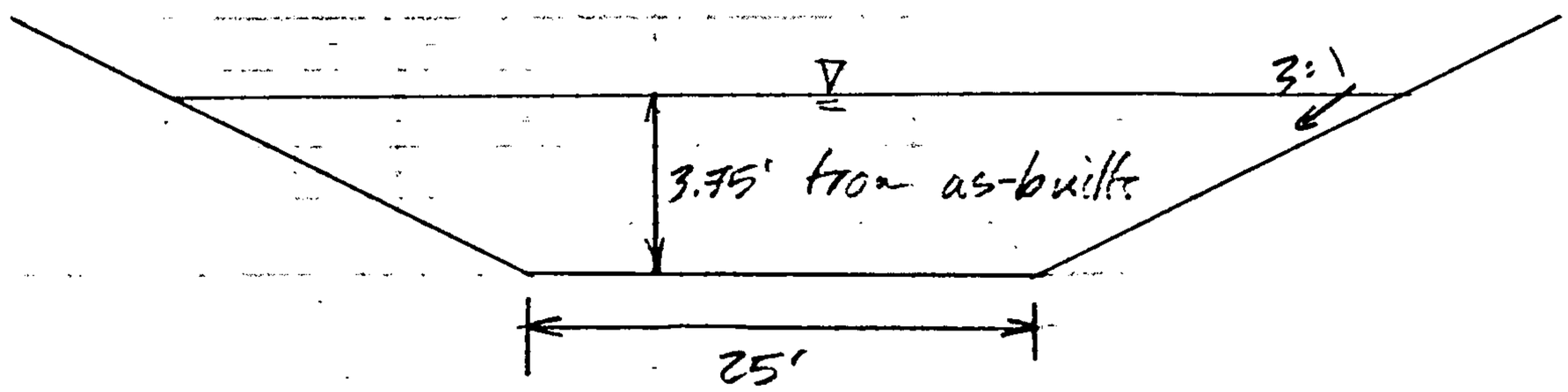

for a trapezoidal channel,

$Q = \frac{K'}{n} b^{8/3} S^{1/2}$

D = depth of water = 3.75'

b = bottom width = 25' $\frac{D}{b} = 0.15 \rightarrow K' = .0749$

from King Handbook of Hydraulics, 1939

Below culverts

n = .030 (earth lined with weeds), S = 0.54 %

Q = 980.4 ft^3/s

Above culverts

n = 0.35 (rip rap with weeds), S = 0.7 %

Q = 956.7 ft^3/s

PROJECT NAME LADERA WEST SHEET ____ OF ____
PROJECT NO. ____ BY JB DATE 7-92
SUBJECT QUICKWATER CH'D JD DATE 8/92

AVID ENGINEERING, INC.

② Check capacity of culverts under Rhonda de Lechuzas (actual capacity)

Use procedure from "Hydraulic design of Highway Culverts,"* trying different flows to find the headwater. HW must be less than 6.4' deep to prevent overtopping the curb above the culverts (see sketch, next pg.)

Assume:

TW depth = y_n for channel downstream

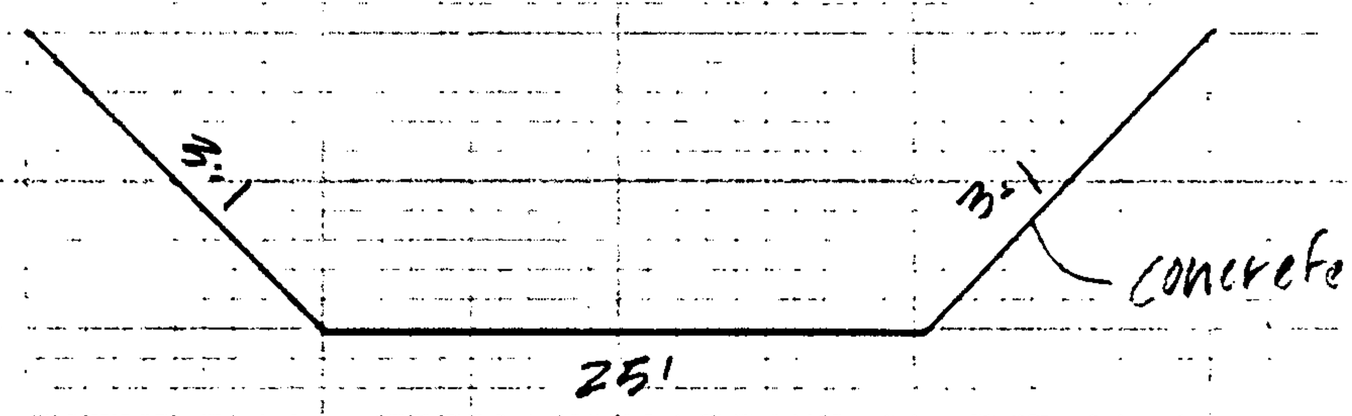

n = .013 concrete

S = .002 say

Channel downstream of culverts

* Report no. FHWA-IP-85-15, Sept. 1985

PROJECT NAME LADERA SHEET ____ OF ____

PROJECT NO. ____ BY JB DATE 7-92

SUBJECT ____ CH'D JD DATE 8/92

AVID ENGINEERING, INC.

Rhonda de Lechusas Culverts (data from survey, 9/24/92)

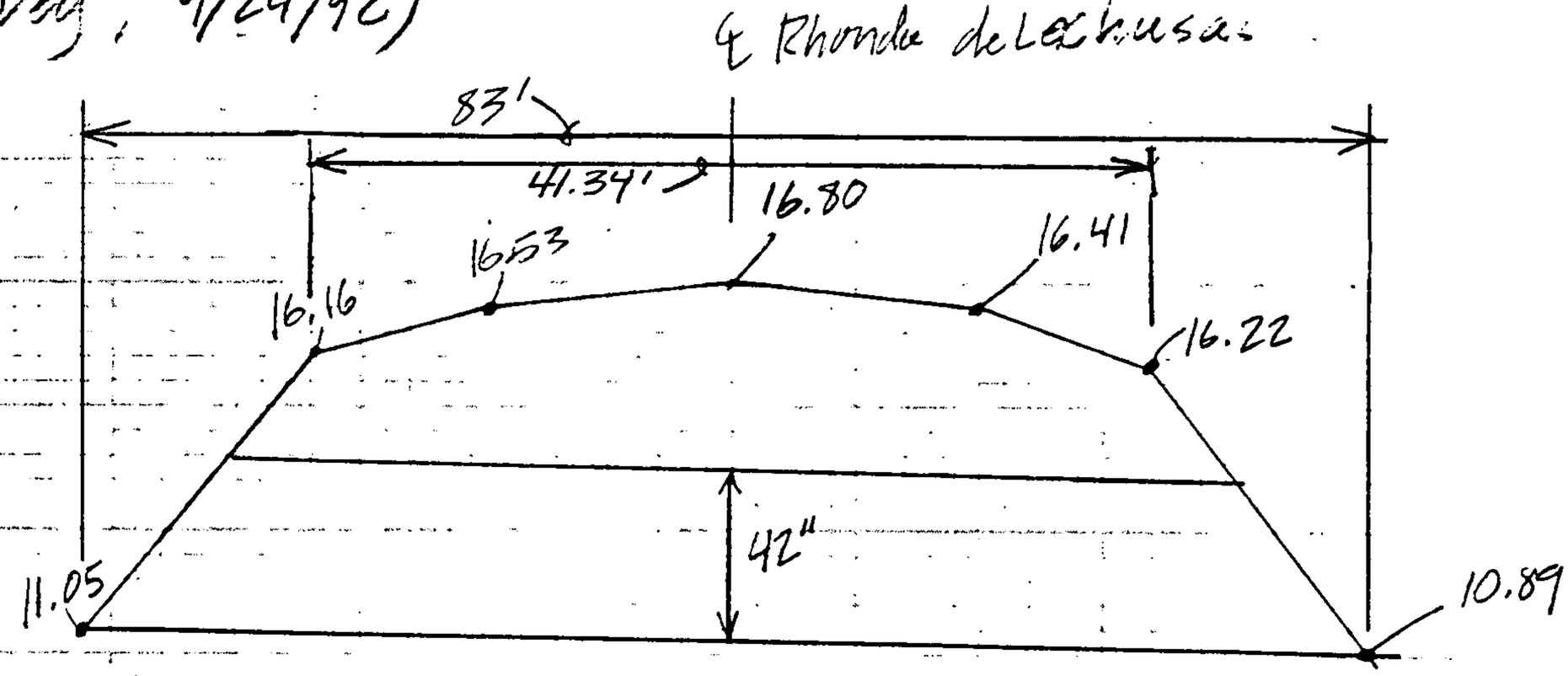

Section Looking North

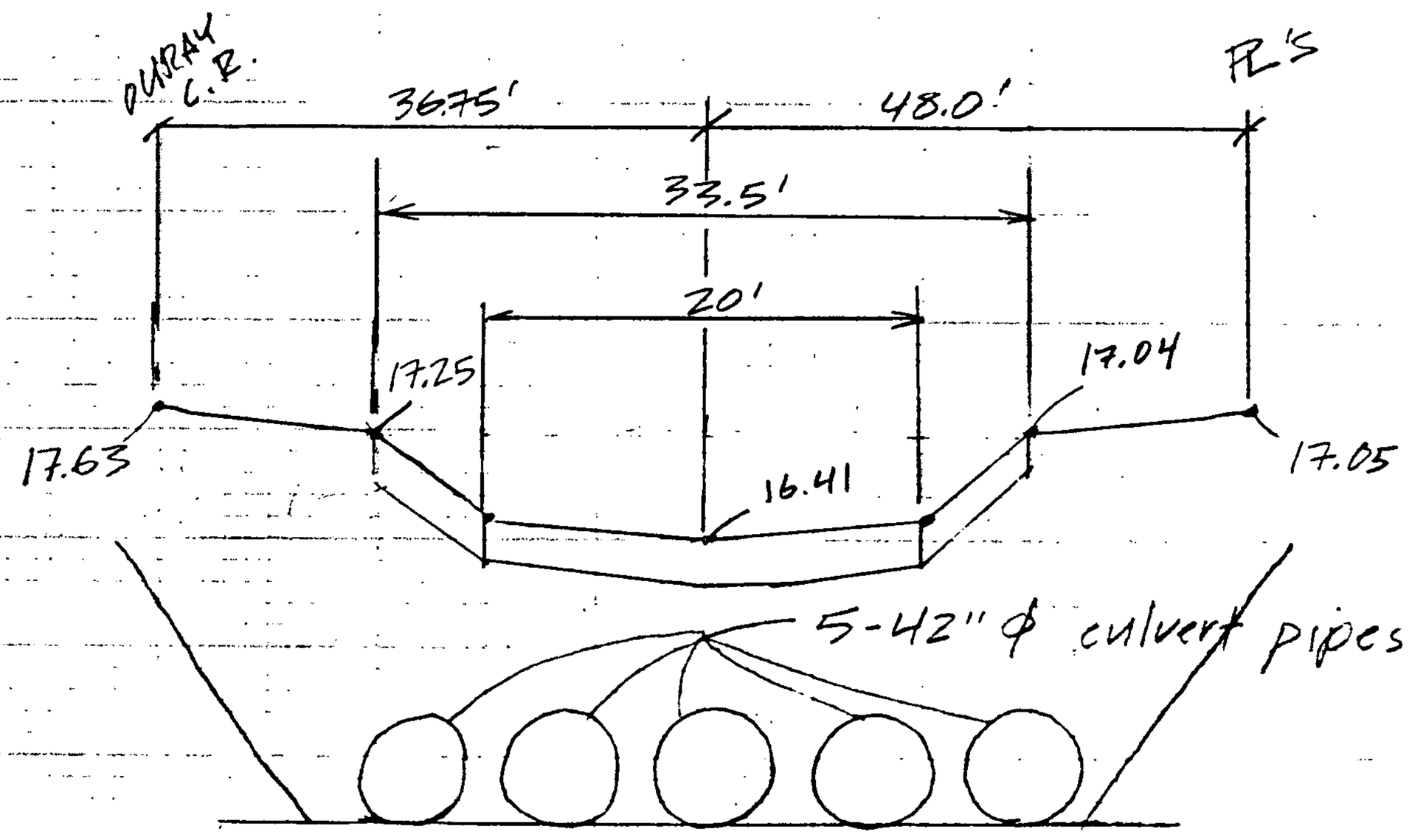

Elevation Looking West (upstream)

PROJECT NAME _____ SHEET _____ OF _____

PROJECT NO. _____ BY JTB DATE 9-92

SUBJECT _____ CH'D JR DATE 10/92

Inlet control calculations:

CHART 2

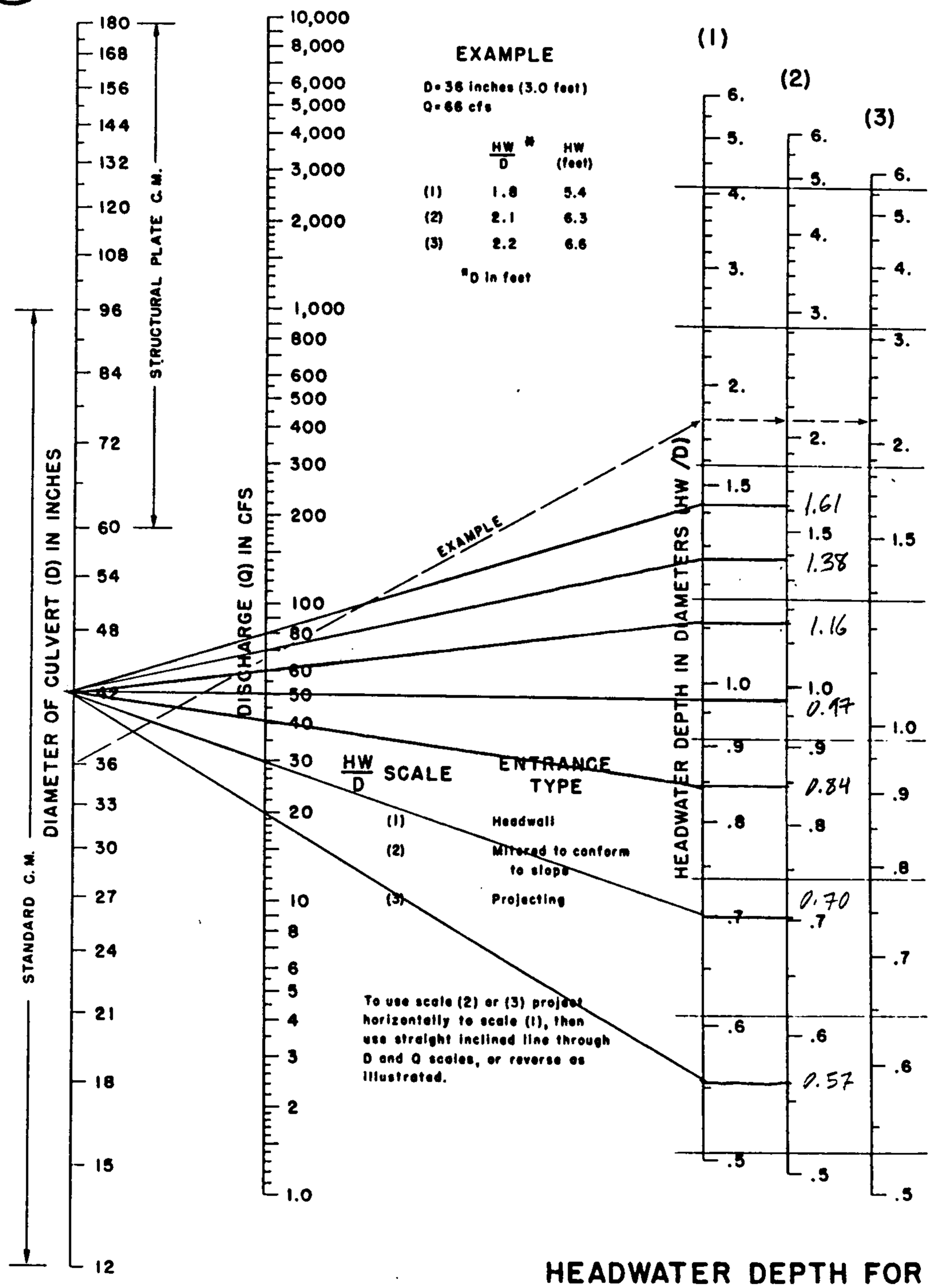

BUREAU OF PUBLIC ROADS JAN. 1963

HEADWATER DEPTH FOR C. M. PIPE CULVERTS WITH INLET CONTROL

7/

AVID ENGINEERING, INC.

For outlet control:

H = head difference between inlet + outlet

$$= \left[1 + K_e + \frac{29 n^2 L}{R^{1.33}}\right]\frac{V^2}{2g}$$

$$R = \frac{A}{P} = \frac{\pi \frac{(3.5')^2}{4}}{\pi (3.5')} = 0.875'$$

$$V = \frac{Q'}{A} = \frac{Q/\text{barrel}}{A}$$

$n = 0.25$ (C.M.P.), $K_e = 0.7$ (mitered)

$$H = \left[1 + 0.7 + \frac{29(.025)^2(80)}{(.875)^{1.33}}\right]\frac{V^2}{2(32.2\ ft/s^2)} = .05329\,V^2$$

Q	Q'	V	H
CFS	CFS	ft/s	ft
200	40	4.16	0.92
250	50	5.20	1.44
300	60	6.24	2.07
350	70	7.28	2.82
400	80	8.32	3.67

PROJECT NAME LADERA SHEET ____ OF ____

PROJECT NO. ____ BY ____ DATE ____

SUBJECT CAPACITY ANALYSIS CH'D JD DATE 10/92

PROJECT: LADERA W.
CULVERTS IN QW CHANNEL

STATION: -

SHEET - OF -

CULVERT DESIGN FORM

DESIGNER / DATE: JB /

REVIEWER / DATE: /

HYDROLOGICAL DATA

SEE ADD'L. SHTS.

- ☐ METHOD: N/A
- ☐ DRAINAGE AREA: ☐ STREAM SLOPE:
- ☐ CHANNEL SHAPE:
- ☐ ROUTING: ☐ OTHER:

DESIGN FLOWS/TAILWATER

R.I. (YEARS)	FLOW (cfs)	TW (ft)

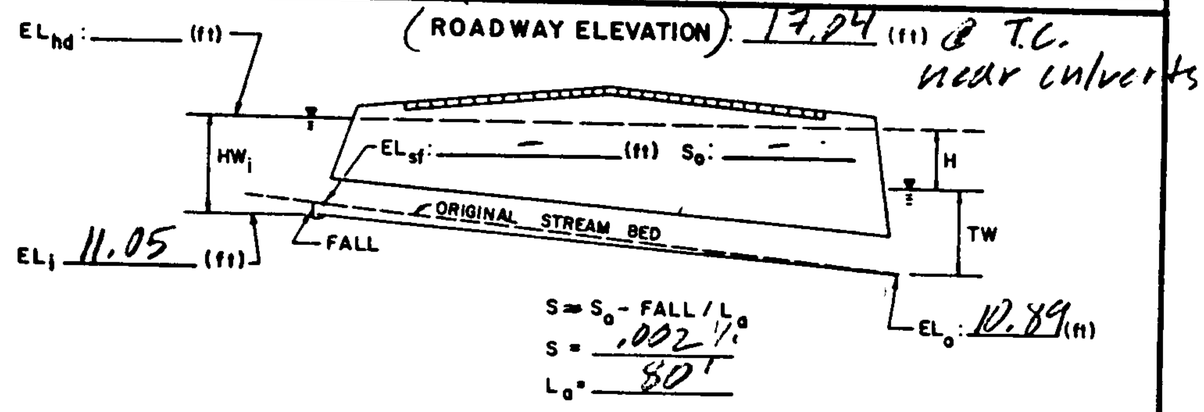

CULVERT DESCRIPTION:

MATERIAL - SHAPE - SIZE - ENTRANCE	TOTAL FLOW Q (cfs)	FLOW PER BARREL Q/N (1)	HEADWATER CALCULATIONS: INLET CONTROL HW$_i$/D (2)	HW$_i$	FALL (3)	EL$_{hi}$ (4)	OUTLET CONTROL TW (5)	d_c	$\frac{d_c+D}{2}$	h_o (6)	k_e	H (7)	EL$_{ho}$ (8)	CONTROL HEADWATER ELEVATION	OUTLET VELOCITY	COMMENTS
5-42" ϕ CMPIs	200	40	.84	2.9		14.0	1.27	1.9	2.7	2.7	.7	0.92	14.5			OK
	250	50	.97	3.4		14.5	1.44	2.2	2.9	2.9	"	1.44	15.2			OK
	300	60	1.16	4.1		15.2	1.60	2.4	3.0	3.0	"	2.07	16.0			OK
	350	70	1.38	4.8		15.9	1.75	2.6	3.1	3.1	"	2.82	16.8			OK
	400	80	1.61	5.6		16.7	1.89	2.8	3.2	3.2	"	3.67	17.8			NG: > TC

TECHNICAL FOOTNOTES:

(1) USE Q/NB FOR BOX CULVERTS

(2) HW$_i$/D = HW/D OR HW$_f$/D FROM DESIGN CHARTS

(3) FALL = HW$_i$ - (EL$_{hd}$ - EL$_{sf}$); FALL IS ZERO FOR CULVERTS ON GRADE

(4) EL$_{hi}$ = HW$_i$ + EL$_i$ (INVERT OF INLET CONTROL SECTION)

(5) TW BASED ON DOWN STREAM CONTROL OR FLOW DEPTH IN CHANNEL.

(6) h_o = TW or (d_c + D/2) (WHICHEVER IS GREATER)

(7) $H = \left[1 + k_e + (29n^2 L)/R^{1.33}\right] V^2/2g$

(8) EL$_{ho}$ = EL$_o$ + H + h_o

SUBSCRIPT DEFINITIONS:

a. APPROXIMATE
f. CULVERT FACE
hd. DESIGN HEADWATER
hi. HEADWATER IN INLET CONTROL
ho. HEADWATER IN OUTLET CONTROL
i. INLET CONTROL SECTION
o. OUTLET
sf. STREAMBED AT CULVERT FACE
tw. TAILWATER

COMMENTS / DISCUSSION:

Capacity $\simeq 350 + \frac{17.0 - 16.8}{17.8 - 16.8}(50)$

$= \boxed{360 \text{ c.f.s.}}$

CULVERT BARREL SELECTED:

SIZE:

SHAPE:

MATERIAL:

ENTRANCE:

AVID ENGINEERING, INC.

③ Check capacity of spillways in channel

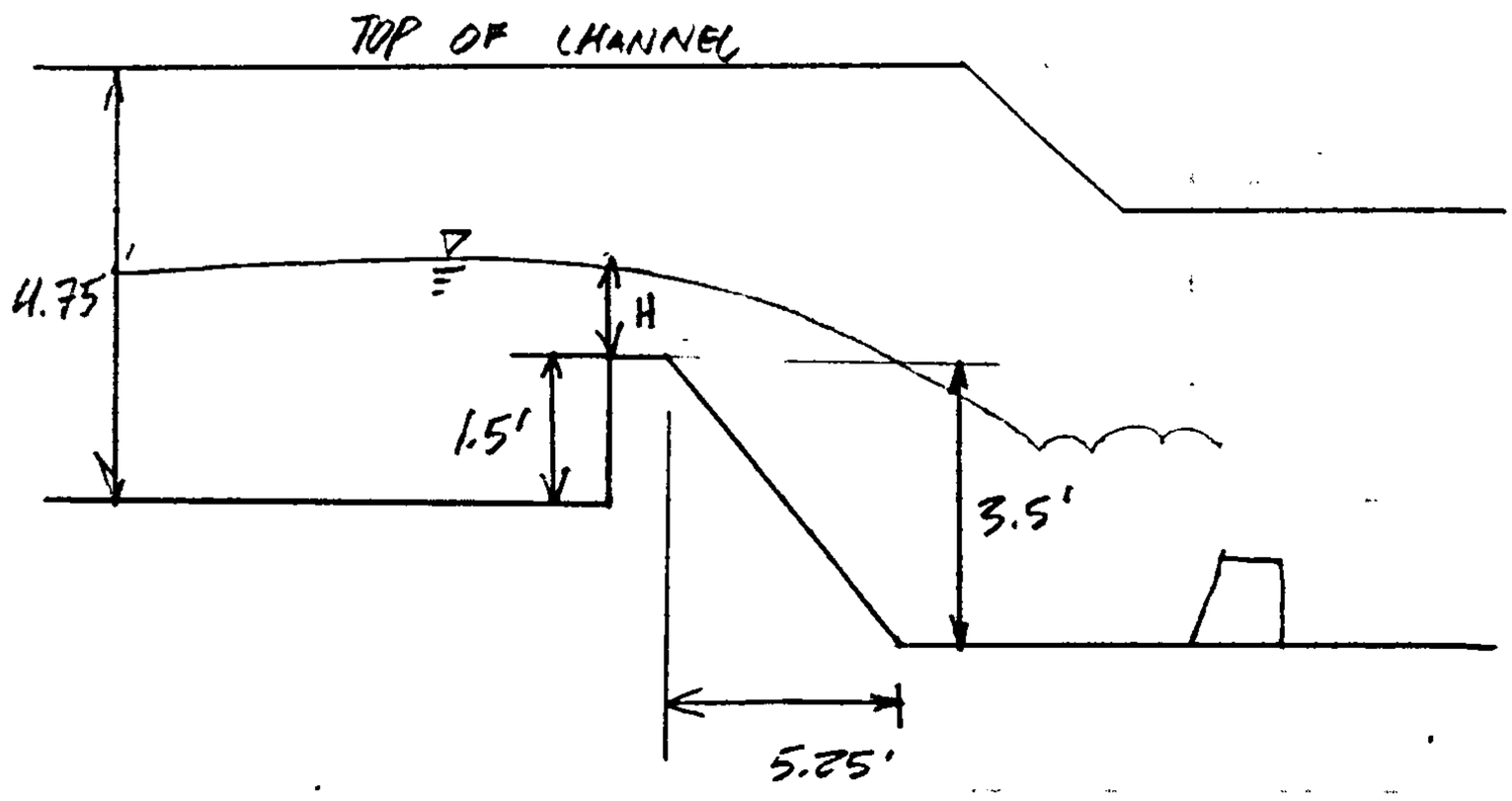

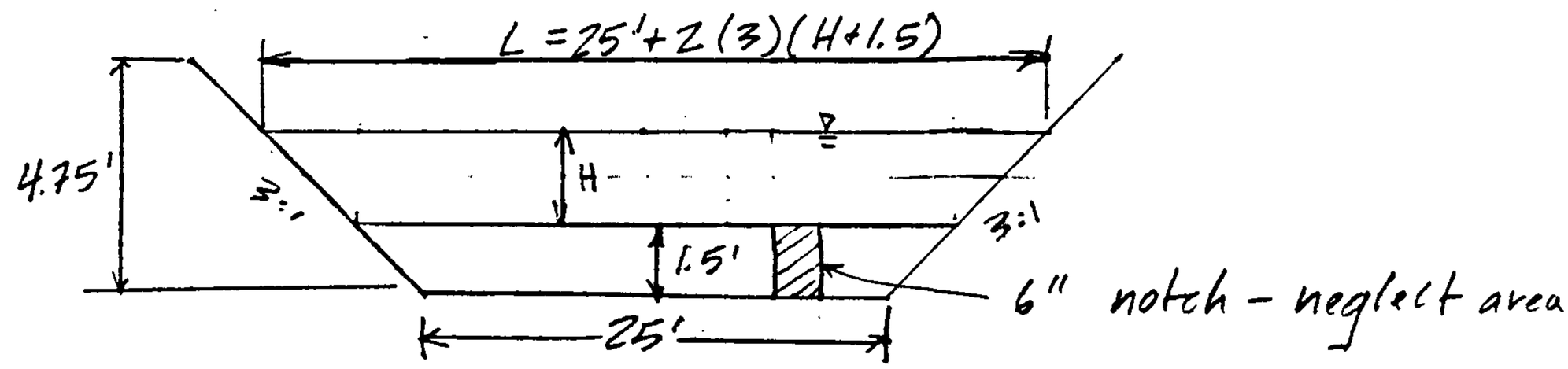

For a trapezoidal weir with 1 inclined face, $Q = CLH^{3/2}$

From King, "Handbook of Hydraulics", 1939, $C \simeq 3.51$ (p.167)

Assume $H = 4.75' - 1.5' = 3.25'$

$L = 25' + 6(3.25' + 1.5') = 53.5'$

$Q = 3.51(53.5')(3.25')^{3/2} = 1{,}100.2$ cfs

PROJECT NAME LADERA WEST SHEET ____ OF ____

PROJECT NO. ____ BY JB DATE 7-92

SUBJECT ____ CH'D JP DATE 3/92

AVID ENGINEERING, INC.

Quickwater analysis summary:

Structure:	Max. capacity: (cfs)
Earth channel	980
5-42" ϕ culverts under R. de L.	360
Dam weirs	1,100

Limiting capacity is 360 cfs in culverts under Rhonda de Lechusas

PROJECT NAME LADERA SHEET ____ OF ____

PROJECT NO. ____ BY JB DATE 7-92

SUBJECT CAPACITY CH'D JP DATE 8/92

AVID ENGINEERING, INC.

RUNOFF FLOW AND VOLUME COMPUTATIONS

PROJECT NAME _____ SHEET _____ OF _____

PROJECT NO. _____ BY _____ DATE _____

SUBJECT _____ CH'D _____ DATE _____

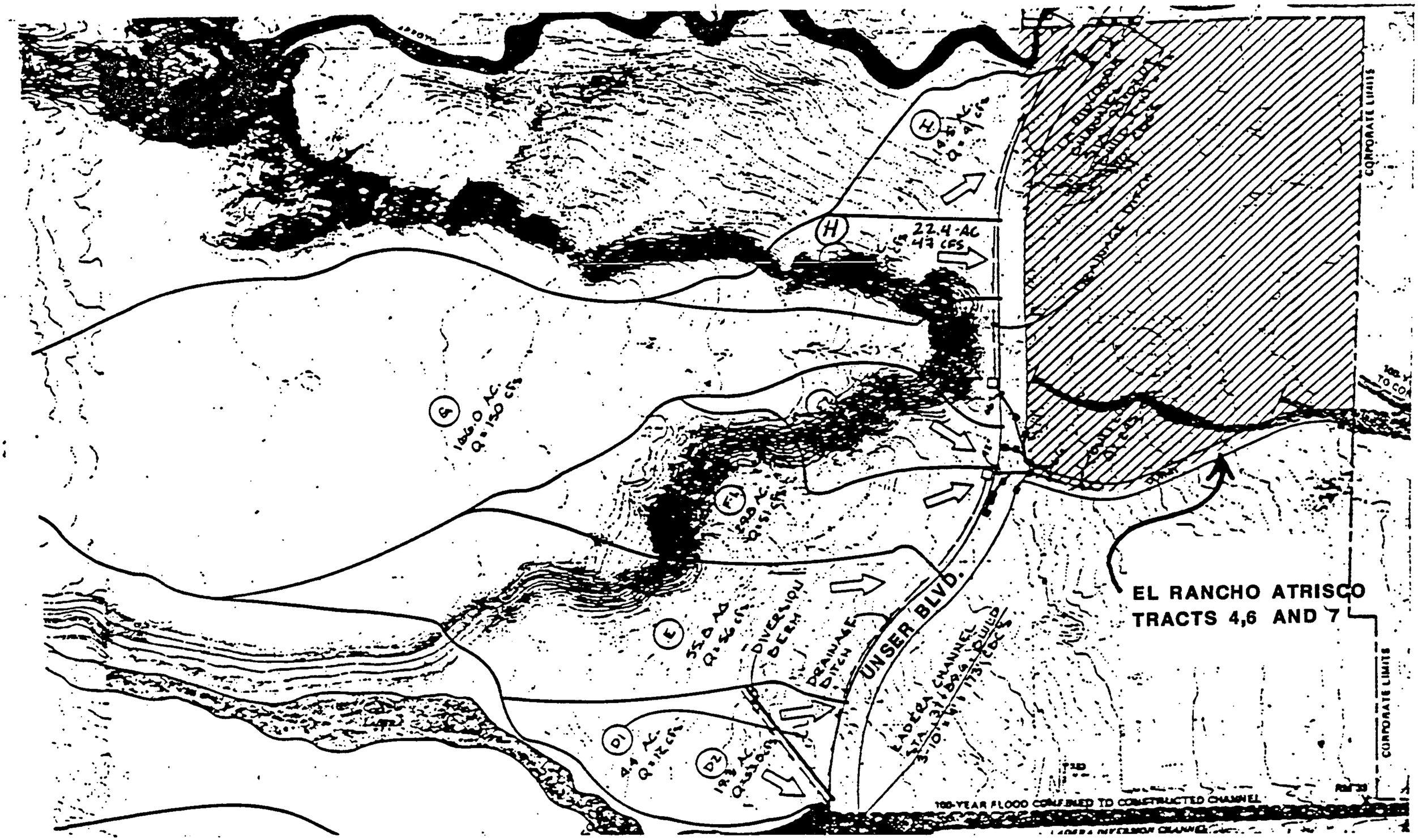

UNSER BLVD. BASINS

FROM: DRAINAGE ANALYSIS REPORT, SPECIAL ASSESSMENT DISTRICT NO. 215, UNSER BOULEVARD AND 98th STREET.
BY: GREINER ENGINEERING SCIENCES, INC.
DATE: JULY, 1986

HYDROLOGY ULTIMATE CONDITIONS computer file SAD214.ULT

BASIN	AREA (ac)	SOIL TYPE	% IMP.	RUNOFF COEF."c"	CXA	Tc (min)	I (in/hr)	Q100 (cfs)	Q10 (cfs)
A1	39.74	B	30	.48	19.07	14.3	3.87	74	48
A2	3.00	A	0	.16	.48				
	7.60	B	0	.34	2.58				
	---				---				
	10.60				3.06	10.0	4.65	14	9
B1	18.39	B	30	.48	8.83	10.0	4.65	41	27
B2	2.03	B	60	.62	1.26	10.0	4.65	6	4
B3	5.35	B	100	.95	5.08	13.2	4.04	21	14
C1	16.51	B	40	.52	8.58	13.1	4.05	35	23
C2	21.70	A	70	.62	13.45				
	4.20	B	60	.62	2.10				
	---				---				
	25.90				15.55	13.10	4.05	63	41
D	26.343	A	65	.52	13.70	10.0	4.65	64	42
E	22.00	C	0	.51	11.22				
	23.00	D	0	.59	13.57				
	62.58	A	30	.31	19.40				
	---				---				
	107.58				44.19	33.3	2.52	111	74
G	163	C	0	.51	83.13	66.7	1.77	147	97
H	4.53	C	0	.51	2.312				
	8.24	D	0	.59	4.859				
	9.63	A	30	.31	2.985				
	---				---				
	22.40				10.16	10	4.65	47	31
R1	5.72	B	100	.95	5.40	10	4.65	26	17
R2	4.76	A	100	.95	4.52	10	4.65	21	14
R3	7.87	A	100	.95	7.48	15	3.72	28	18
OURAY	2.07	A	100	.95	1.96	12	4.23	9	6
E,R3, H,G	300.85	-	-	.48	144.96	67	1.77	256	168
E,R3, H,G, OURAY	302.92	-	-	.49	146.92	67	1.77	260	168
B2,B3, C1,C2	28.65	-	-	.68	19.44	13	4.05	78	52

PROJECT NAME ____ SHEET ____ OF ____
PROJECT NO. ____ BY ____ DATE ____
SUBJECT ____ CH'D ____ DATE ____

AVID ENGINEERING, INC.

Unser Basins E, G, H Runoff Volumes - developed conditions
calculated w. D.P.M. plates 22.2 C-2, C-3, C-4

Basin	Area (ac.)	Soil Type (SCS)	Pervious C.N.	Composite C.N.	Runoff depth, Q (in.)	Vol. = Q × A (ac.-ft)	(ft³)
E	22.0	C - 0% imp.	80	—	0.7	1.28	
	23.0	D - 0% imp.	85	—	1.0	1.92	
	62.58	A - 30% imp.	54	67	0.3	1.56	
	107.58						
G	163	A - 0% imp.	54	—	0.1	1.36	
H	4.53	C - 0% imp.	80	—	0.7	0.26	
	8.24	D - 0% imp.	85	—	1.0	0.69	
	9.63	A - 30% imp.	54	67	0.3	0.24	
	22.40						
Total =	292.98				Total =	7.31	318,424

Data from: "Drainage Analysis Report, S.A.D. No. 215, Unser Blvd. and 98th Street", by Greiner Engineering Sciences, Inc., 1986

TABLE 1

UNDEVELOPED CONDITIONS

Analysis Point	Included Drainage Area	Area ac	TC min	Intensity 10-yr in/hr	Intensity 100-yr in/hr	10-yr Frequency Q cfs	10-yr Frequency Vol ft^3	100-yr Frequency Q cfs	100-yr Frequency Vol ft^3
7	A	15.69	12.70	2.76	4.18	6.90	13,213	10.50	20,047
5	A, B1, B2	24.06	24.05	1.96	2.97	7.60	20,264	11.40	30,745
8	E1	6.95	3.73	3.15	4.77	3.50	5,855	5.30	8,884
9	E1, B3	20.17	12.59	2.97	4.51	9.78	16,991	14.54	25,780
10	E1, B3, C	33.97	22.40	3.08	2.03	11.30	28,613	17.20	43,414
11	E2	32.31	38.83	1.60	2.42	8.27	27,210	12.51	41,285

The Runoff Coefficient "C" used for all undeveloped condition drainage calculations was 0.16.

Minimum TC used was 10 minutes.

FROM: DRAINAGE REPORT FOR TRACTS 4X, 6X AND 7X, EL RANCHO ATRISCO.
BY: RESOURCE TECHNOLOGY, INC.
DATE: APRIL 1985

TABLE 2

FULLY DEVELOPED CONDITIONS

Analysis Point	Included Drainage Area	Area ac	TC min	"C" Factor	Intensity 10-yr in/hr	Intensity 100-yr in/hr	10-yr Frequency Q cfs	10-yr Frequency Vol ft^3	100-yr Frequency Q cfs	100-yr Frequency Vol ft^3
1	From "Preliminary Drainage Analysis Report - Unser Blvd. From Ladera Drive to Dellyne Ave." by Greiner Engineering Sciences, Inc.								245	
2	A	15.69	8.77	.56	3.15	4.77	27.7	46,245	41.9	70,165
3	B1	4.43	4.48	.35	3.15	4.77	4.9	8,168	7.4	12,393
4	B3	13.22	5.83	.40	3.15	4.77	16.7	27,840	25.2	42,240
5	B2, B3	17.16	9.78	.44	3.15	4.77	23.8	39,745	36.0	60,302
6	C	13.80	11.89	.49	2.87	4.36	19.4	35,593	29.5	54,003
12	E1, E2	39.26	19.02	.49	3.15	4.77	43.28	101,263	65.6	153,641
	E1 → 6.95								11.6	27,198

Minimum TC used was 10 minutes.

FROM: DRAINAGE REPORT FOR TRACTS 4X, 6X AND 7X, EL RANCHO ATRISCO.
BY: RESOURCE TECHNOLOGY, INC.
DATE: APRIL 1985

AVID ENGINEERING, INC.

Find T_c for the Volcano Business Park

Use old D.P.M. methods

$L \simeq 5000'$ $\quad S = \frac{5206' - 5126'}{5000'} = .016$

$T_c = 0.0078 \frac{L^{0.77}}{S^{0.385}} = 27.02$ min.

Check: $V = \frac{5000'}{27.02 \times 60 \text{ sec}} = 3.08$ ft/s > 3.0 ft/s OK

$T_c = 27.02$ min = $\boxed{0.45 \text{ hr}}$

Find $Q_{P,100YR}$: assume free discharge for whole area.

$C = 0.77$, $CN = 97$

Rain = 2.2", runoff depth = 1.9"

$I = 2.2(1.3) = 2.86$"/hr

$Q = CIA = (0.77)(2.86"/hr)(68.7 \text{ ac}) = \boxed{151.29 \text{ c.f.s.}}$

PROJECT NAME LADERA SHEET ____ OF ____

PROJECT NO. ____ BY ____ DATE ____

SUBJECT OFFSITE CH'D JD DATE 10/92

EL RANCHO ATRISCO
PHASE II

120 CFS

EXISTING OURAY RD. N.W.

PROPOSED OURAY RD. N.W.

SCALE: 1" = 100'

FUTURE UNSER BLVD. N.W.

PROPOSED VULCAN ST. N.W.

PROPOSED LUMBRE ST. N.W.

PROPOSED PIEDRA

C-1

10

P.N.M. WEST MESA SWITCHING STATION

PLAINS ELECTRIC CO-OP INC.

4800'

LEGEND

Existing Contours

Water Stock

Analysis Point

Direction Of Flow

Areas Requiring 100 % Ponding Of Runoff From 2.2" Rainfall With 24 Hr. Release Rate.

NOTE:
Lots 11, 12, 13, 18, 19, 20, 21 Allowed Free Standing From Areas Not Shaded.

SECTION A-A

SECTION B-B

KEYED NOTES

1. 48" ϕ RCP @ 2.5% Slope
2. Field Inlet Discharges Only
3. Drop Inlet
4. Drop Inlet, 2'-0" Type "A" And 2'-0" Type Double "A" In Succession

NOV 16 1984
DESIGN HYDROLOGY SECTION

LEVERTON - EASTERLING, INC.

DRAINAGE PLAN
VOLCANO BUSINESS PARK

DATE: NOVEMBER, 1984

SHEET 2 OF 2

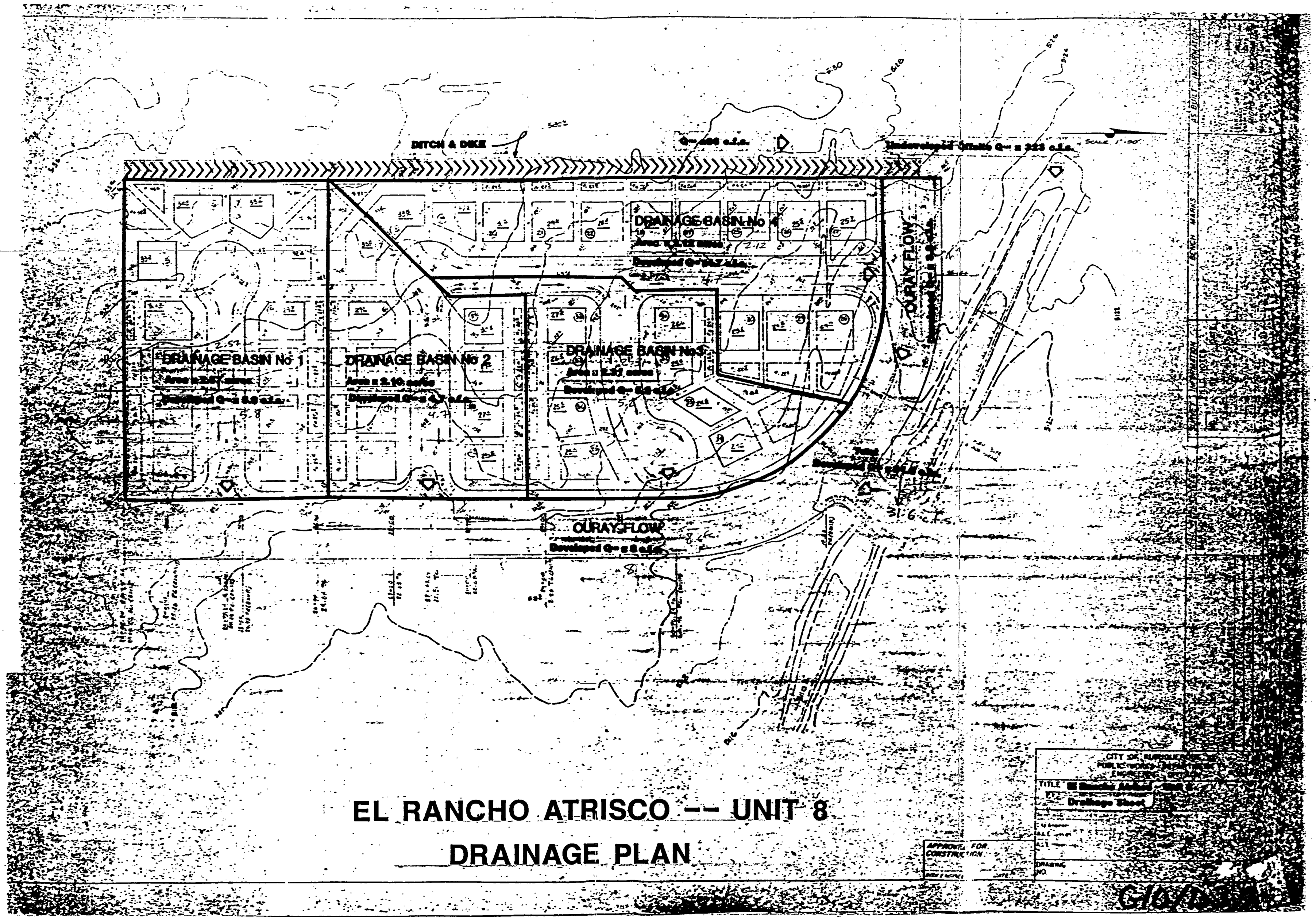

EL RANCHO ATRISCO -- UNIT 8

DRAINAGE PLAN

DENNEY - GROSS & ASSOCIATES, INC.
ENGINEERS SURVEYORS PLANNERS
2400 COMANCHE ROAD N.E.
ALBUQUERQUE, NEW MEXICO 87107
(505) 884-0695

LOCATION ERA III

PROJ. NO. 893.12

DATE 11/18/86

DESIGNER J JONES

PAGE 5

DRAINAGE AREAS 3A + 3B REFER TO APH EXHIBIT III

3A AREA 12.1 AC
3B AREA 7.7 AC
ERA UNIT 1Q 18.2 AC
ERA UNIT 2C 4.2 AC
TOTAL AREA 42.2 AC

$$TC = 0.0028 \frac{(2830)^{0.77}}{(0.005)^{.385}} = 27.2 \text{ MINUTES}$$

Q = 46 CFS (SEE PAGE 6)

CHECK STREET CAPACITY APH

RONDA DE LECHUGAS 40' F-F

MANNING'S

$$Q = \frac{1.486}{n} S^{1/2} A R^{2/3}$$

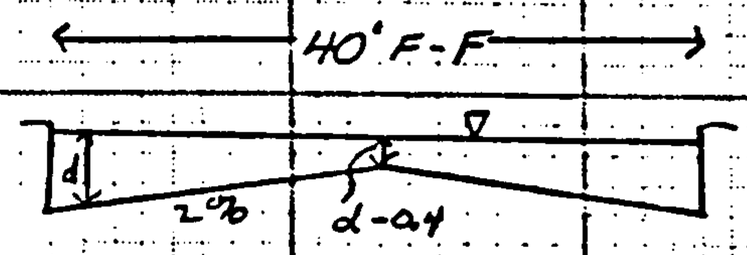

STREET SECTION

n = 0.017
S = 0.005
A = 1/2((d + (d-.4)) 20) 2
R = A/P

TRY d = 0.57'

A = (1/2(0.57 + 0.17) 20) 2

A = 14.8

$$R = \frac{14.8}{41.14} = 0.36$$

$$Q = \frac{1.486}{0.017}(0.005)^{1/2}(14.8)(0.36)^{2/3} = 46.1 \text{ CFS}$$

CONCLUSION: FLOW DEPTH IN RONDA DE LECHUGAS IS APPROXIMATELY 0.57' FOR THE 100 YR STORM

FROM: DRAINAGE MANAGEMENT PLAN FOR EL RANCHO ATRISCO, PHASE III

BY: DENNEY-TIBLJAS-McLEAN & ASSOCIATES, INC.

DATE: NOVEMBER 1986

PROJECT NAME
PROJECT NO.
SUBJECT

SHEET OF
BY DATE
CH'D DATE

AVID ENGINEERING, INC.

Runoff Volumes: developed conditions

Basin	Area (ac.)	Soil Type	Pervious C.N.	Composite C.N.	Runoff depth Q (in)	Vol. = Q × A (ac.-ft.)	(ft³)
EIR.A. Units 2,3,7,10	42.2	A - 50% imp.	68	83	0.9	3.17	137,867
E.R.A. Unit 8	10.4	A - 50% imp.	68	83	0.9	0.78	33,977
Volcano Bus. Park	68.7	B - 85% imp.	92	97	1.9	10.88	473,824

AVID ENGINEERING, INC.

Calculate Q_p, $\forall$ for PNM easement east of site – undeveloped

1.) Find Q_p – use rational method

$A = 5.69$ ac. $T_c = .0078 \frac{L^{0.77}}{S^{0.385}}$, $L = 1100'$

$S = \frac{36' - 21'}{1100'} = .014$ $T_c = 8.9$ min

check V: $V = \frac{L}{T_c \times 60} = \frac{1100'}{8.9 \times 60s} = 2.06$ '/s < 3'/s

so use DPM plate 22.2 B-1

$V = 0.75$ ft/s $T_c = \frac{L}{V \times 60} = \boxed{24.44 \text{ min}}$

SCS soil group A → C = 0.16

Rainfall = 2.2" (100 yr, 6hr storm)

$I = 2.2(1.35) = 2.97$ "/hr

$Q = CIA = (0.16)(2.97)(5.69) = \boxed{2.70 \text{ c.f.s.}}$

2.) Find $\forall_{RUNOFF}$ – use SCS curve #'s

CN = 54, runoff = 0.05"

$\forall_{100yr} = \frac{0.05''}{12''/ft}(5.69 \text{ ac})\left(\frac{43560 \text{ ft}^2}{\text{ac}}\right) = \boxed{1033 \text{ ft}^3}$

PROJECT NAME _____ SHEET _____ OF _____

PROJECT NO. _____ BY _____ DATE _____

SUBJECT _____ CH'D _____ DATE _____

AVID ENGINEERING, INC.

Calculate Q_p, $\forall$ for basin E2-A developed.

1.) Find Q_p - use rational method

$A = 5.43$ ac.

$L = 630'$, $S = .005$ ft/ft assume

$T_c = .0078 \frac{630^{.77}}{.005^{.385}} = 8.6$ min

check $V = \frac{630'}{8.6 \cdot 60 s} = 1.22$ ft/s < 3 ft/s

so use DPM plate 22.2 B-2 $\rightarrow V = 1.9$ ft/s

$T_c = \frac{L}{V \cdot 60} = 5.53$ min < 10 min so use

$\boxed{T_c = 10 \text{ min}}$

SCS soil type "A", 50% impervious

$C = 0.49$ (see RTI basin E2)

Rain = 2.2", $I = 2.2(2.2) = 4.84$ "/hr

$Q = CIA = .49(4.84)(5.43) = \boxed{12.9 \text{ c.f.s.}}$

2.) $\forall_{RUNOFF} = ?$ C.N. = 83, runoff = 0.9"

$\forall_{100 yr} = \frac{0.9''}{12''/ft}(5.43 \text{ ac})(43560 \frac{ft^2}{ac}) = \boxed{17,740 \text{ ft}^3}$

PROJECT NAME _____ SHEET _____ OF _____

PROJECT NO. _____ BY _____ DATE _____

SUBJECT _____ CH'D _____ DATE _____

AVID ENGINEERING, INC.

CALCULATE

HYDROGRAPHS

PROJECT NAME _____ SHEET _____ OF _____

PROJECT NO. _____ BY _____ DATE _____

SUBJECT _____ CH'D _____ DATE _____

HYDROGRAPH CALCULATIONS

BASIN:	UNSER BLVD. BASINS E,G,H,R3 AND OURAY				
Qp=	260.00	C.F.S.			
Tp=Tc=	66.70	MIN.			
V=	318424.00	C.F.			
T=	133.40	MIN.	=	2.22	HRS.
S1=	3.90	C.F.S./MIN.			
S2=	-3.90	C.F.S./MIN.			
NOTE: ASSUME T = 2*Tc					
DT=	66.70	MIN.	=	1.11	HRS.

TIME (MIN)	TIME (HR)	FLOW (CFS)
0.00	0.00	0.00
66.70	1.11	260.00
133.40	2.22	0.00
200.10	3.34	0.00
266.80	4.45	0.00
333.50	5.56	0.00
400.20	6.67	0.00
466.90	7.78	0.00
533.60	8.89	0.00
600.30	10.01	0.00
667.00	11.12	0.00

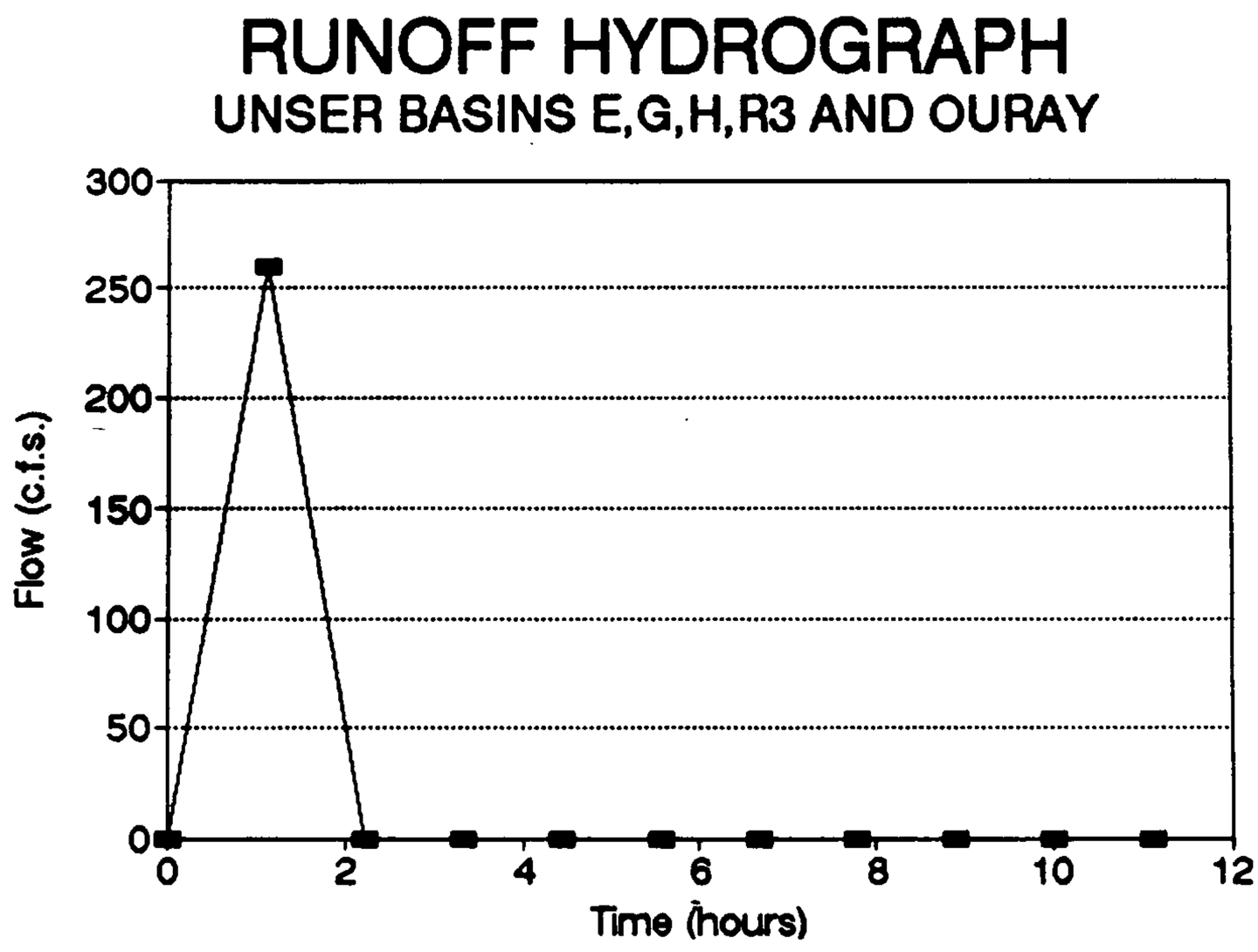

HYDROGRAPH CALCULATIONS

BASIN:	EL RANCHO ATRISCO BASINS A,B,E1				
Qp=	96.90	C.F.S.			
Tp=Tc=	9.78	MIN.			
V=	170058.00	C.F.			
T=	58.50	MIN.	=	0.97	HRS.
S1=	9.91	C.F.S./MIN.			
S2=	-1.99	C.F.S./MIN.			
DT=	9.78	MIN.	=	0.16	HRS.

TIME (MIN)	TIME (HR)	FLOW (CFS)
0.00	0.00	0.00
9.78	0.16	96.90
19.56	0.33	77.45
29.34	0.49	58.00
39.12	0.65	38.54
48.90	0.82	19.09
58.68	0.98	0.00
68.46	1.14	0.00
78.24	1.30	0.00
88.02	1.47	0.00
97.80	1.63	0.00

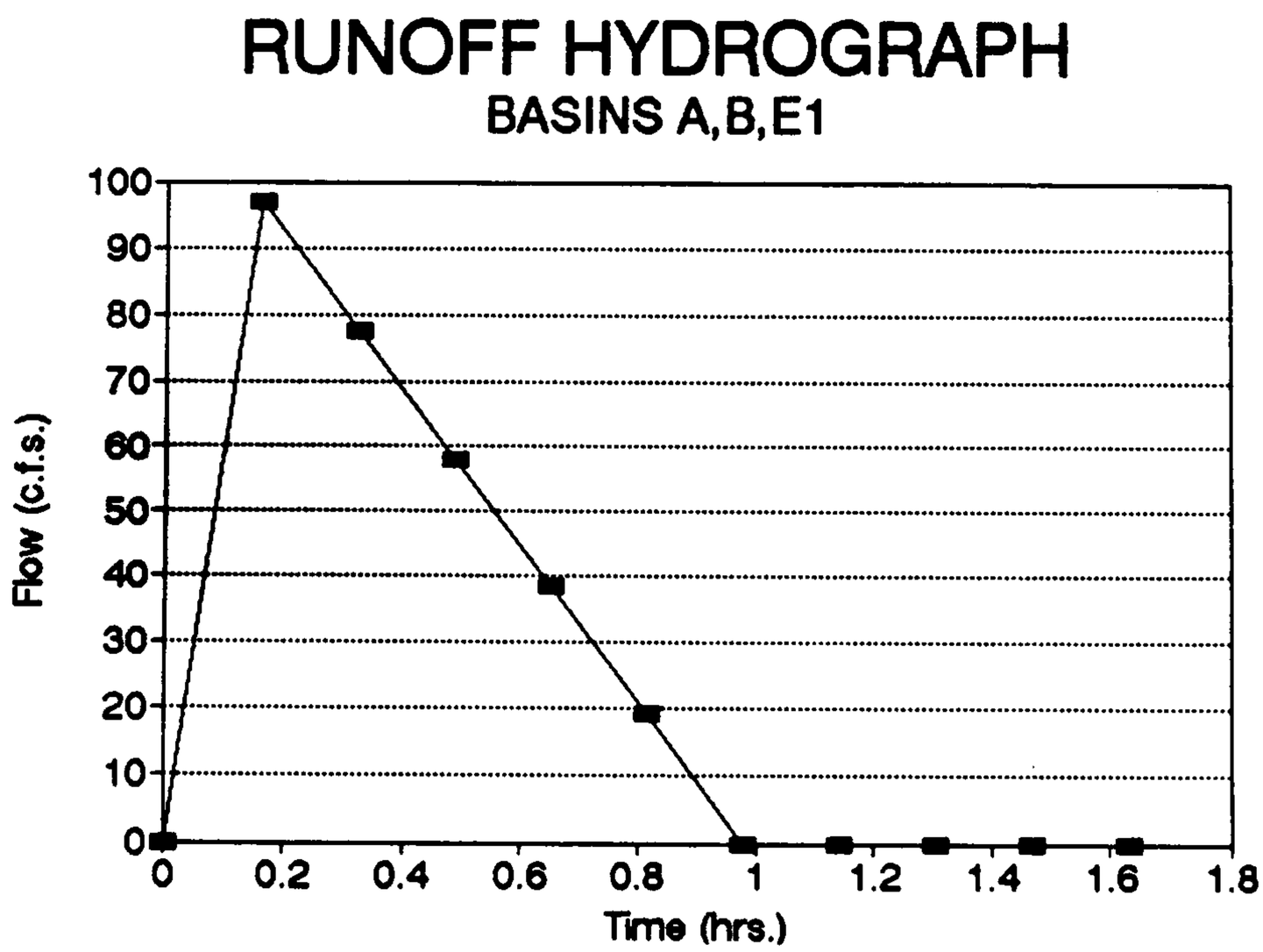

HYDROGRAPH CALCULATIONS

BASIN:	BASIN E2-A				
Qp=	12.90	C.F.S.			
Tp=Tc=	5.53	MIN.			
V=	17740.00	C.F.			
T=	45.84	MIN.	=	0.76	HRS.
S1=	2.33	C.F.S./MIN.			
S2=	-0.32	C.F.S./MIN.			
DT=	5.53	MIN.	=	0.09	HRS.

TIME (MIN)	TIME (HR)	FLOW (CFS)
0.00	0.00	0.00
5.53	0.09	12.90
11.06	0.18	11.13
16.59	0.28	9.36
22.12	0.37	7.59
27.65	0.46	5.82
33.18	0.55	4.05
38.71	0.65	2.28
44.24	0.74	0.51
49.77	0.83	0.00
55.30	0.92	0.00

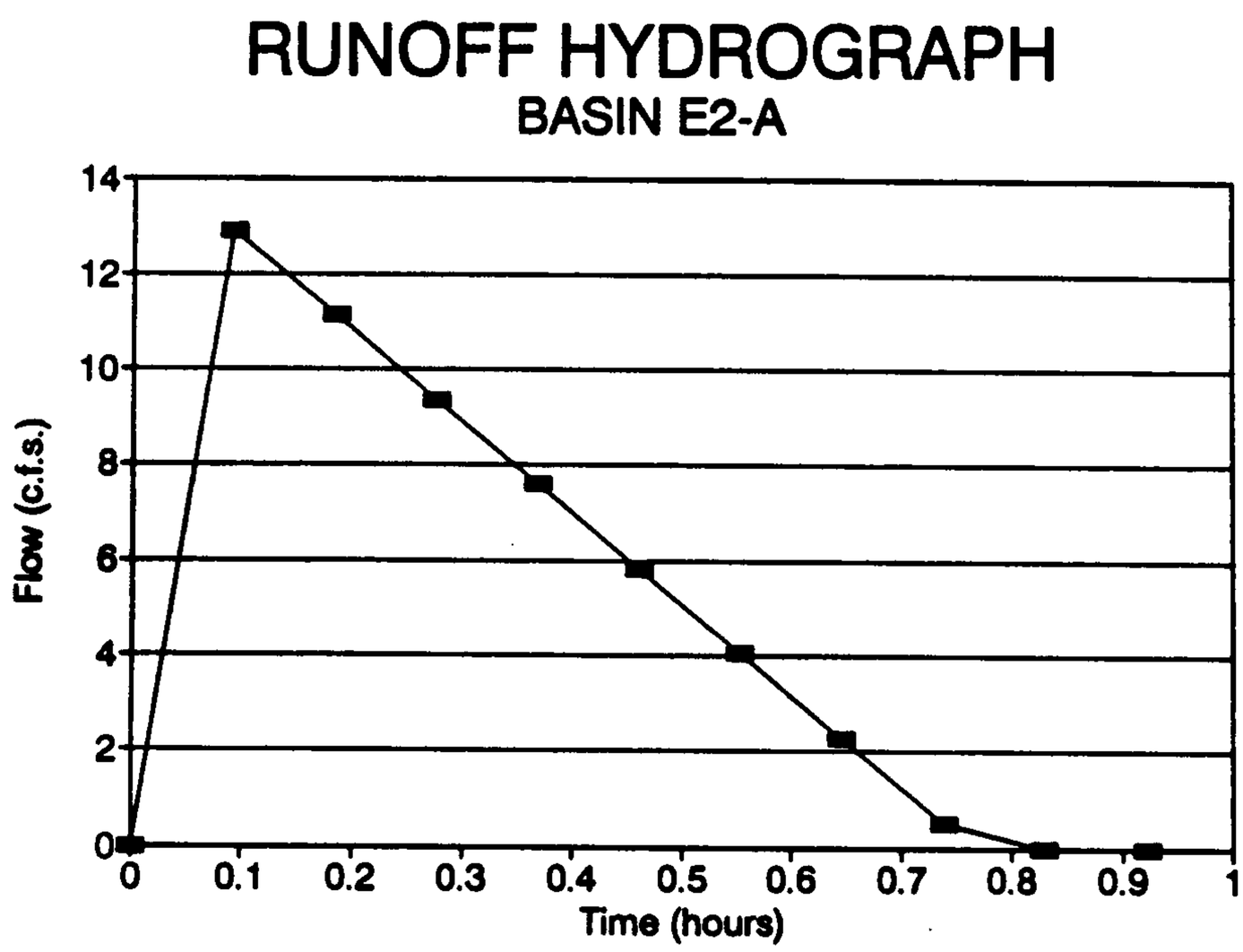

HYDROGRAPH CALCULATIONS

BASIN:	EL RANCHO ATRISCO BASIN C				
Qp=	29.50	C.F.S.			
Tp=Tc=	11.89	MIN.			
V=	54003.00	C.F.			
T=	61.02	MIN.	=	1.02	HRS.
S1=	2.48	C.F.S./MIN.			
S2=	-0.60	C.F.S./MIN.			
DT=	11.89	MIN.	=	0.20	HRS.

TIME (MIN)	TIME (HR)	FLOW (CFS)
0.00	0.00	0.00
11.89	0.20	29.50
23.78	0.40	22.36
35.67	0.59	15.22
47.56	0.79	8.08
59.45	0.99	0.94
71.34	1.19	0.00
83.23	1.39	0.00
95.12	1.59	0.00
107.01	1.78	0.00
118.90	1.98	0.00

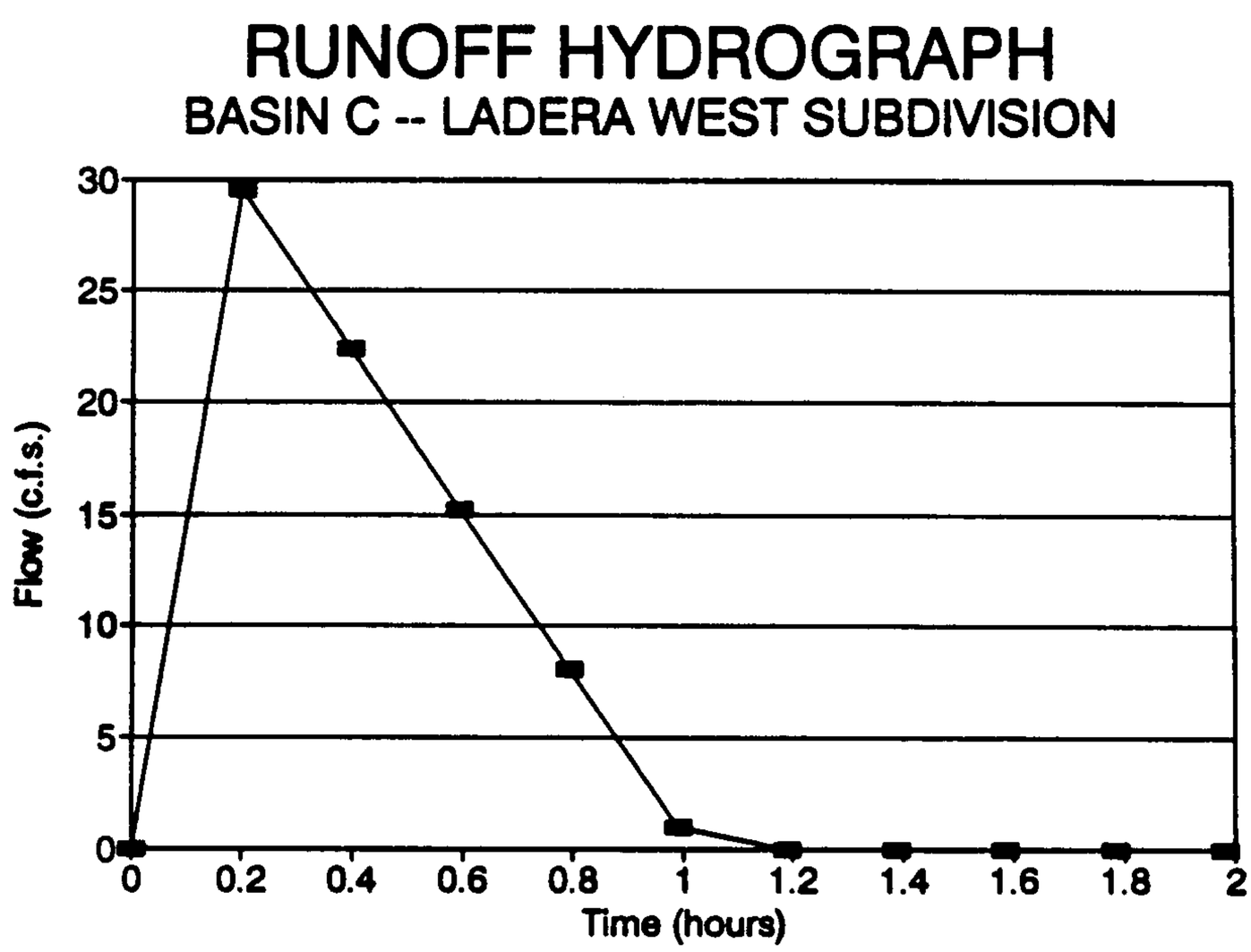

HYDROGRAPH CALCULATIONS

BASIN:	P.N.M. EASEMENT E. OF SITE				
Qp=	2.70	C.F.S.			
Tp=Tc=	24.44	MIN.			
V=	1033.00	C.F.			
T=	48.88	MIN.	=	0.81	HRS.
S1=	0.11	C.F.S./MIN.			
S2=	-0.11	C.F.S./MIN.			
NOTE: ASSUME T=2*Tc					
DT=	24.44	MIN.	=	0.41	HRS.

TIME (MIN)	TIME (HR)	FLOW (CFS)
0.00	0.00	0.00
24.44	0.41	2.70
48.88	0.81	0.00
73.32	1.22	0.00
97.76	1.63	0.00
122.20	2.04	0.00
146.64	2.44	0.00
171.08	2.85	0.00
195.52	3.26	0.00
219.96	3.67	0.00
244.40	4.07	0.00

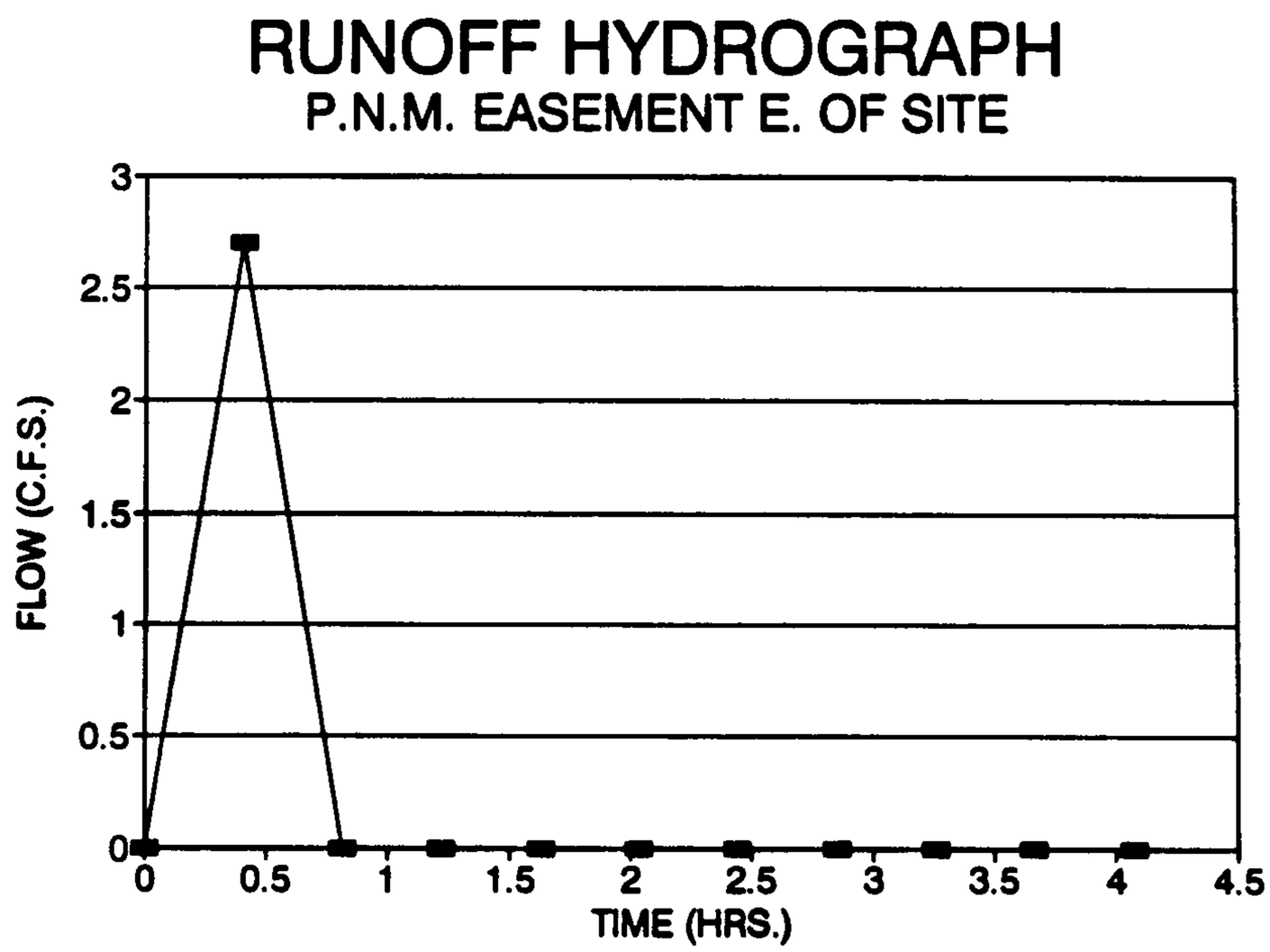

HYDROGRAPH CALCULATIONS

BASIN:	VOLCANO BUSINESS PARK				
Qp=	120.00	C.F.S.			
Tp=Tc=	27.00	MIN.			
V=	473824.00	C.F.			
T=	131.62	MIN.	=	2.19	HRS.
S1=	4.44	C.F.S./MIN.			
S2=	-1.15	C.F.S./MIN.			
DT=	27.00	MIN.	=	0.45	HRS.

TIME (MIN)	TIME (HR)	FLOW (CFS)
0.00	0.00	0.00
27.00	0.45	120.00
54.00	0.90	89.03
81.00	1.35	58.06
108.00	1.80	27.09
135.00	2.25	0.00
162.00	2.70	0.00
189.00	3.15	0.00
216.00	3.60	0.00
243.00	4.05	0.00

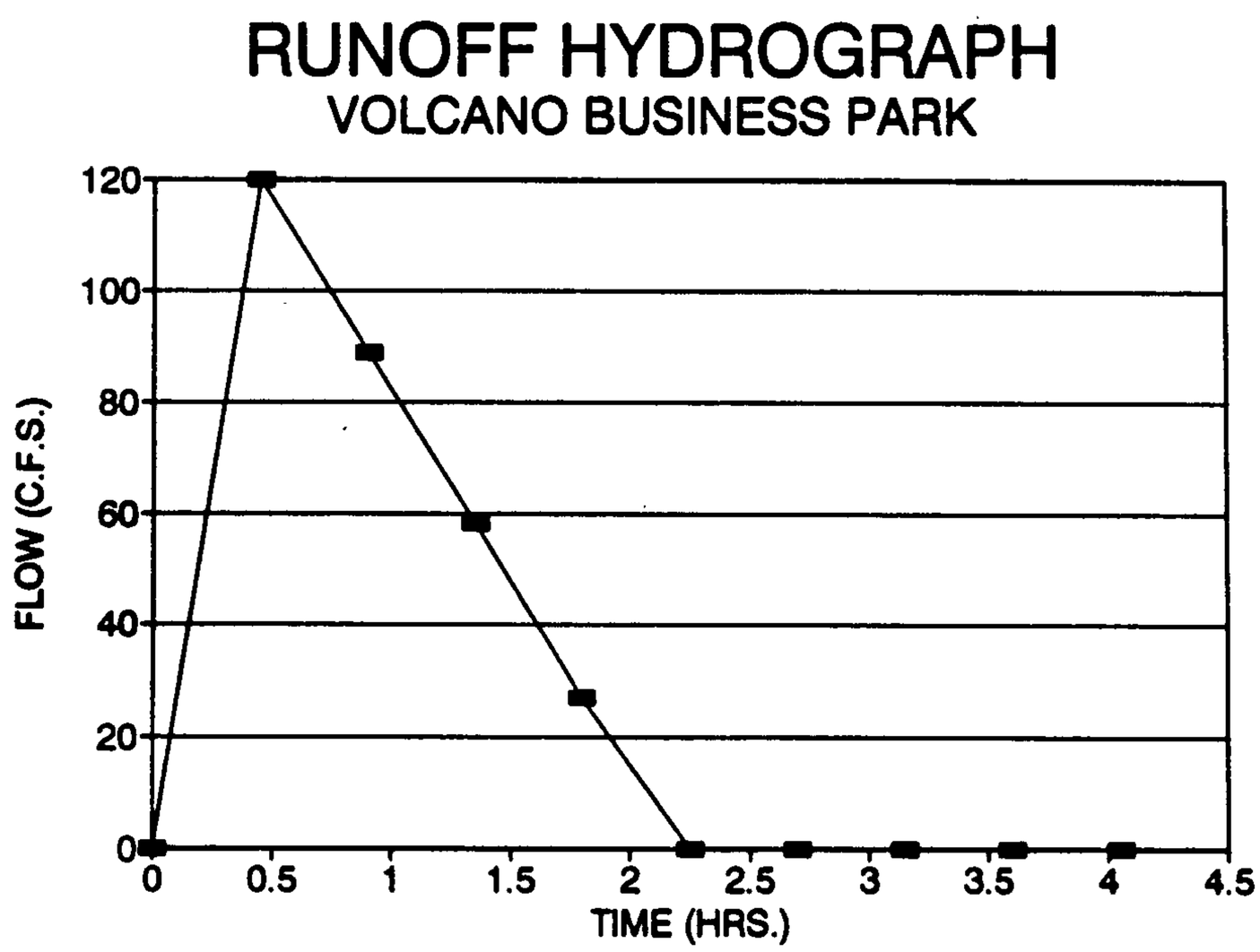

HYDROGRAPH CALCULATIONS

BASIN:	EL RANCHO ATRISCO UNITS 2,3,7,10				
Qp=	49.80	C.F.S.			
Tp=Tc=	27.20	MIN.			
V=	137867.00	C.F.			
T=	92.28	MIN.	=	1.54	HRS.
S1=	1.83	C.F.S./MIN.			
S2=	-0.77	C.F.S./MIN.			
DT=	27.20	MIN.	=	0.45	HRS.

TIME (MIN)	TIME (HR)	FLOW (CFS)
0.00	0.00	0.00
27.20	0.45	49.80
54.40	0.91	28.99
81.60	1.36	8.17
108.80	1.81	0.00
136.00	2.27	0.00
163.20	2.72	0.00
190.40	3.17	0.00
217.60	3.63	0.00
244.80	4.08	0.00
272.00	4.53	0.00

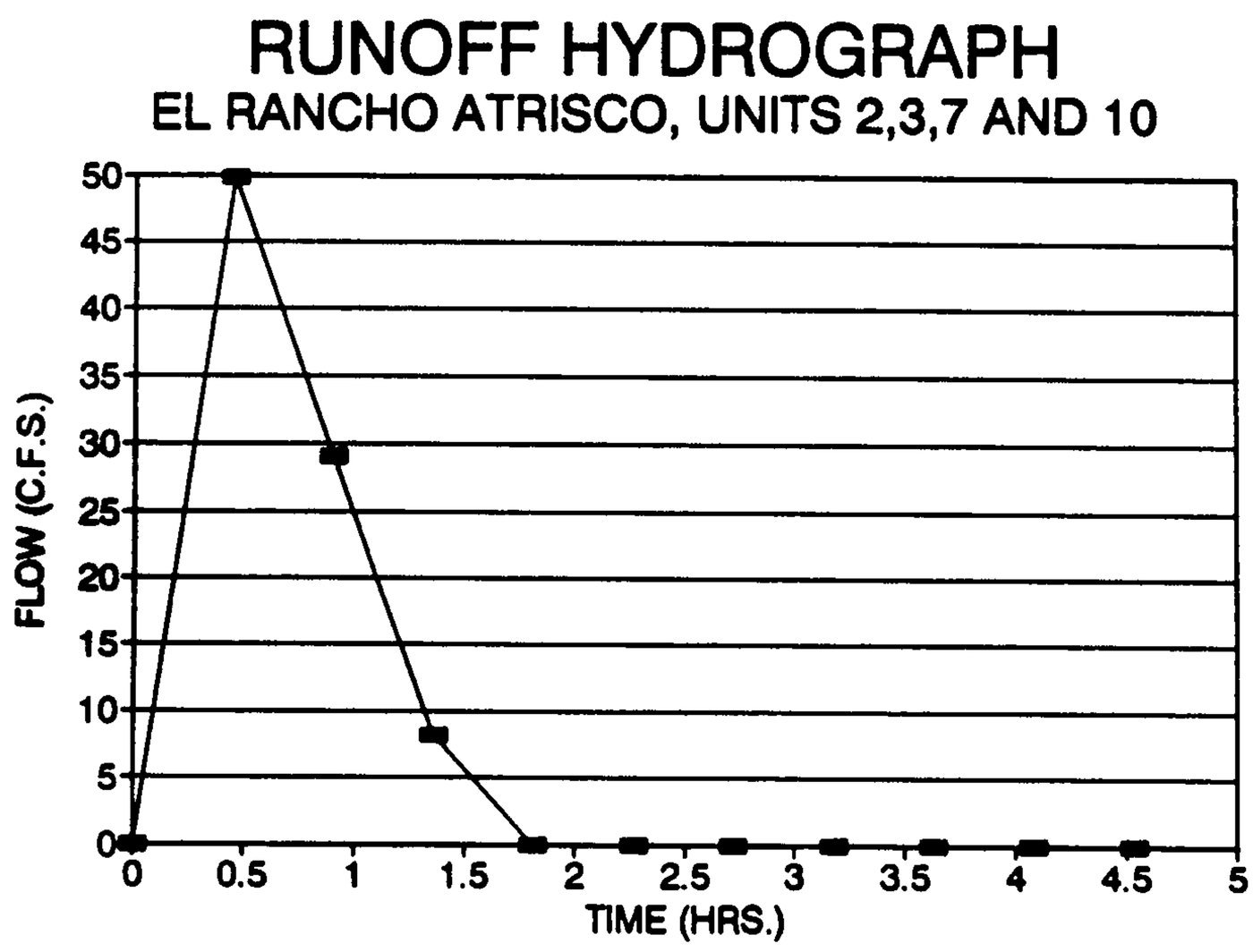

HYDROGRAPH CALCULATIONS

BASIN:	EL RANCHO ATRISCO UNIT 8				
Qp=	31.60	C.F.S.			
Tp=Tc=	10.00	MIN.	ASSUMED		
V=	33977.00	C.F.			
T=	35.84	MIN.	=	0.60	HRS.
S1=	3.16	C.F.S./MIN.			
S2=	-1.22	C.F.S./MIN.			
DT=	10.00	MIN.	=	0.17	HRS.

TIME (MIN)	TIME (HR)	FLOW (CFS)
0.00	0.00	0.00
10.00	0.17	31.60
20.00	0.33	19.37
30.00	0.50	7.14
40.00	0.67	0.00
50.00	0.83	0.00
60.00	1.00	0.00
70.00	1.17	0.00
80.00	1.33	0.00
90.00	1.50	0.00
100.00	1.67	0.00

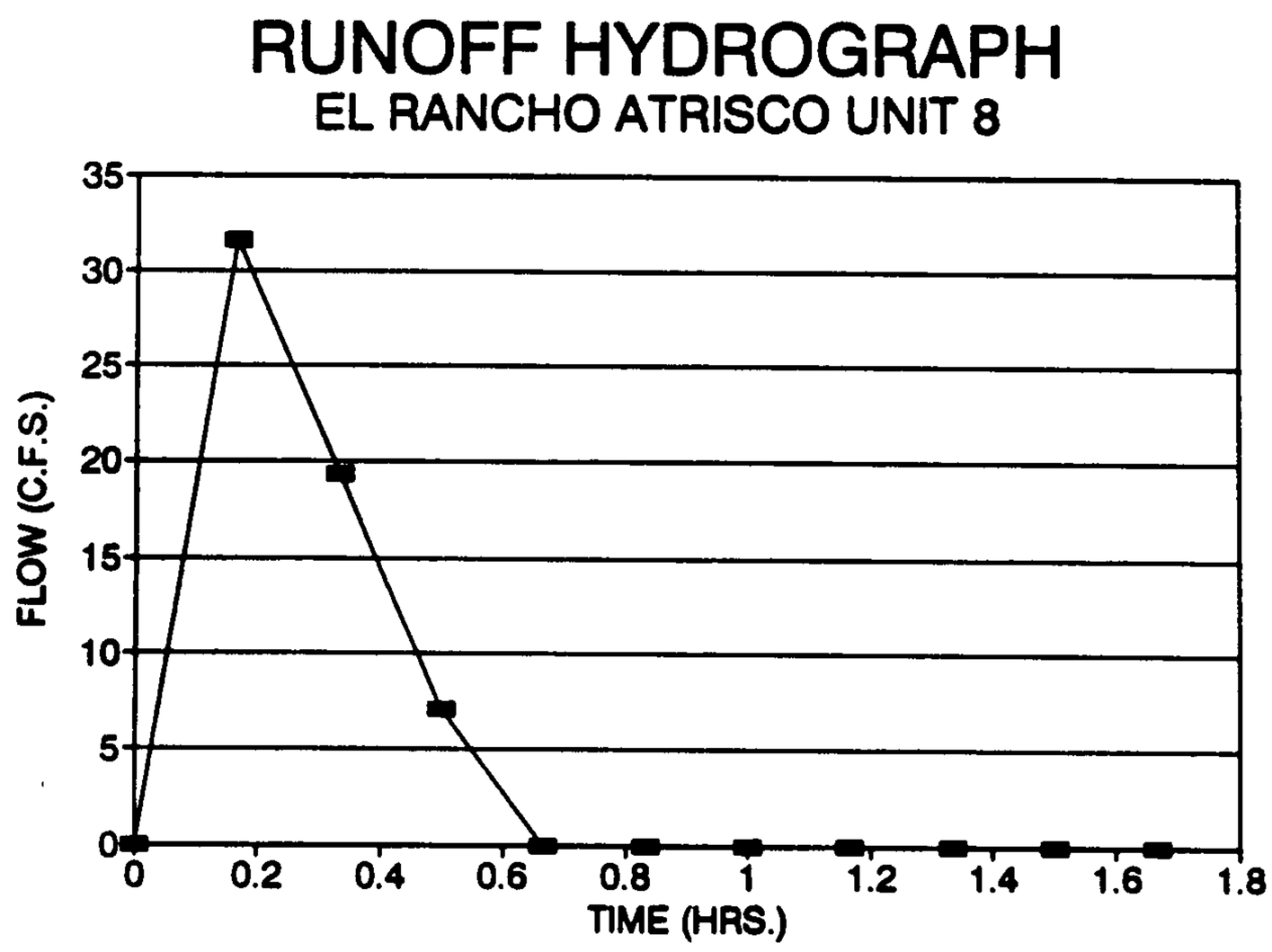

AVID ENGINEERING, INC.

STORAGE / ROUTING
COMPUTATIONS

PROJECT NAME _____ SHEET _____ OF _____

PROJECT NO. _____ BY _____ DATE _____

SUBJECT _____ CH'D _____ DATE _____

AVID ENGINEERING, INC.

Compute storage-outflow relation for use in AHYMO:

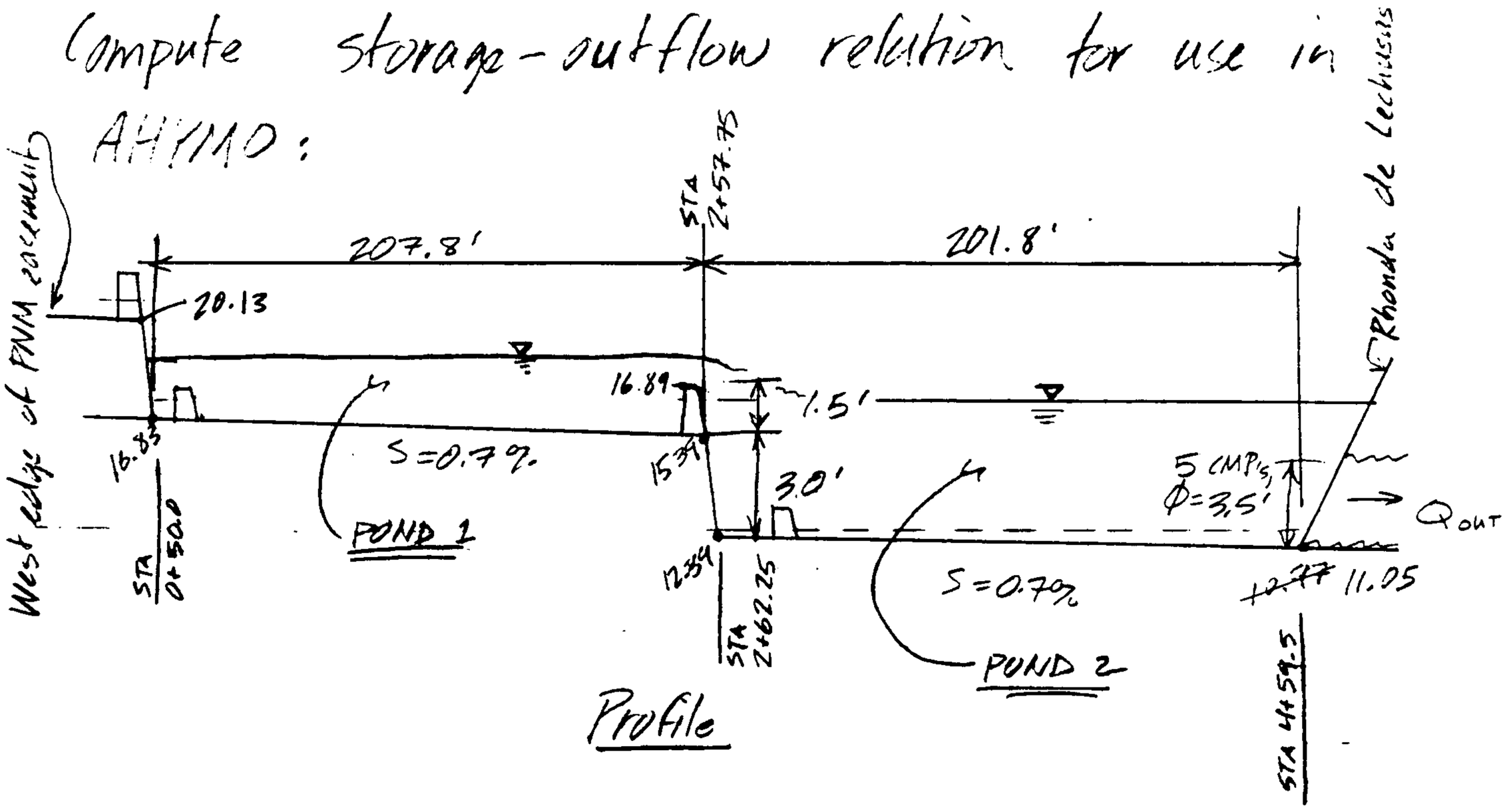

Profile

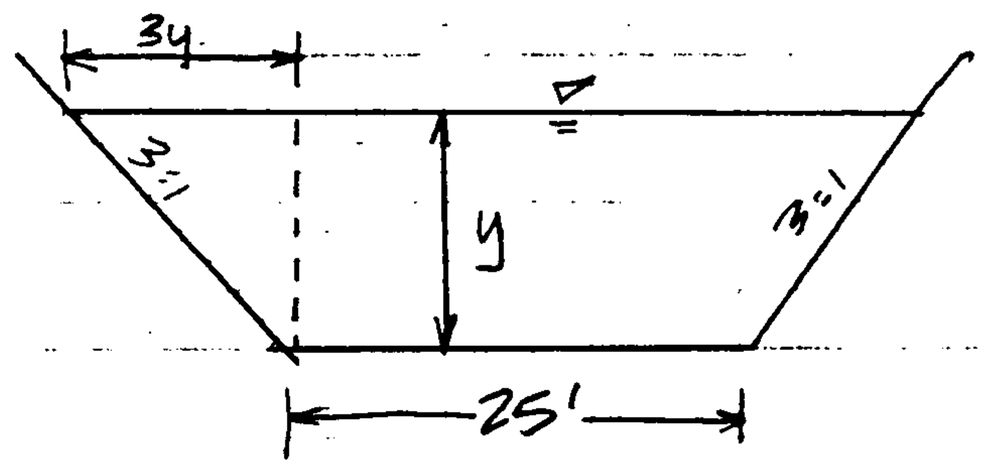

X-section

PROJECT NAME _____ SHEET _____ OF _____

PROJECT NO. _____ BY JR DATE 7-92

SUBJECT _____ CH'D JP DATE 8/92

AVID ENGINEERING, INC.

Calculate storage - outflow relation upstream of culverts (POND 2)

Find headwater elevations for
Q = 50, 100, 150 cfs through culverts
(HW for other flows already calculated)

For outlet control calculations =

$H = (.05329)(V^2)$ = head loss through culvert

$V = \frac{Q/\text{barrel}}{A}$, $A = \pi \frac{3.5^2}{4} = 9.62\ ft^2$

Q (cfs)	50	100	150	200	250	300	350
Q/barrel	10	20	30	40	50	60	70
V (ft/s)	1.04	2.08	3.12	PREVIOUSLY CALC'ED			
H (ft)	0.058	0.23	0.52				
EL HW	SEE NEXT PG.			14.5	15.2	16.0	16.8

Note: outlet control only applies for HW/D > .75

PROJECT NAME LADERA WEST SHEET ____ OF ____
PROJECT NO. ____ BY JB DATE 7-92
SUBJECT ____ CH'D DP DATE 2/97

PROJECT: LADERA W.

STATION: Rhonda de Lech.

SHEET ____ OF ____

CULVERT DESIGN FORM

DESIGNER / DATE: JB / 7-92

REVIEWER / DATE: ____ / ____

HYDROLOGICAL DATA

SEE ADD'L SHTS.

- ☐ METHOD: N/A
- ☐ DRAINAGE AREA: ____ ☐ STREAM SLOPE: ____
- ☐ CHANNEL SHAPE: ____
- ☐ ROUTING: ____ ☐ OTHER: ____

DESIGN FLOWS/TAILWATER

R.I. (YEARS)	FLOW (cfs)	TW (ft)

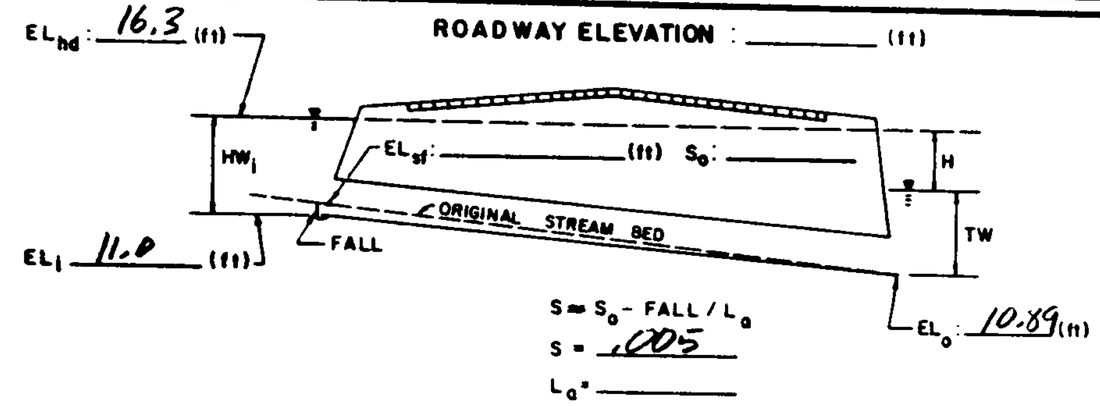

CULVERT DESCRIPTION:

MATERIAL - SHAPE - SIZE - ENTRANCE	TOTAL FLOW Q (cfs)	FLOW PER BARREL Q/N (1)	HEADWATER CALCULATIONS: INLET CONTROL HW_i/D (2)	HW_i	FALL (3)	EL_{hi} (4)	OUTLET CONTROL TW (5)	d_c	$\frac{d_c+D}{2}$	h_o (6)	k_e	H (7)	EL_{ho} (8)	CONTROL HEADWATER ELEVATION	OUTLET VELOCITY	COMMENTS
5-42" ϕ CMP's	50	10				(11.6)	0.56	.96	2.2	2.2	.7	.06	13.2	11.6		INLET CONTROL (HW_o + .75D)
	100	20	0.57	2.0		13.0	.85	1.37	2.4	2.4	"	.23	13.5	13.0		"
	150	30	0.70	2.5		13.5	1.07	1.7	2.6	2.6	"	.52	14.0	14.0		OUTLET CONTROL

TECHNICAL FOOTNOTES:

(1) USE Q/NB FOR BOX CULVERTS

(2) $HW_i/D = HW/D$ OR HW_f/D FROM DESIGN CHARTS

(3) $FALL = HW_i - (EL_{hd} - EL_{sf})$; FALL IS ZERO FOR CULVERTS ON GRADE

(4) $EL_{hi} = HW_i + EL_i$ (INVERT OF INLET CONTROL SECTION)

(5) TW BASED ON DOWN STREAM CONTROL OR FLOW DEPTH IN CHANNEL.

(6) h_o = TW or $(d_c + D/2)$ (WHICHEVER IS GREATER)

(7) $H = \left[1 + k_e + (29n^2 L)/R^{1.33}\right] V^2/2g$

(8) $EL_{ho} = EL_o + H + h_o$

SUBSCRIPT DEFINITIONS:

a. APPROXIMATE
f. CULVERT FACE
hd. DESIGN HEADWATER
hi. HEADWATER IN INLET CONTROL
ho HEADWATER IN OUTLET CONTROL
i. INLET CONTROL SECTION
o. OUTLET
sf. STREAMBED AT CULVERT FACE
tw. TAILWATER

COMMENTS / DISCUSSION:

CULVERT BARREL SELECTED:

SIZE: ____

SHAPE: ____

MATERIAL: ____

ENTRANCE: ____

AVID ENGINEERING, INC.

POND 2

Given Q, EL_{HW}

Find storage Vol

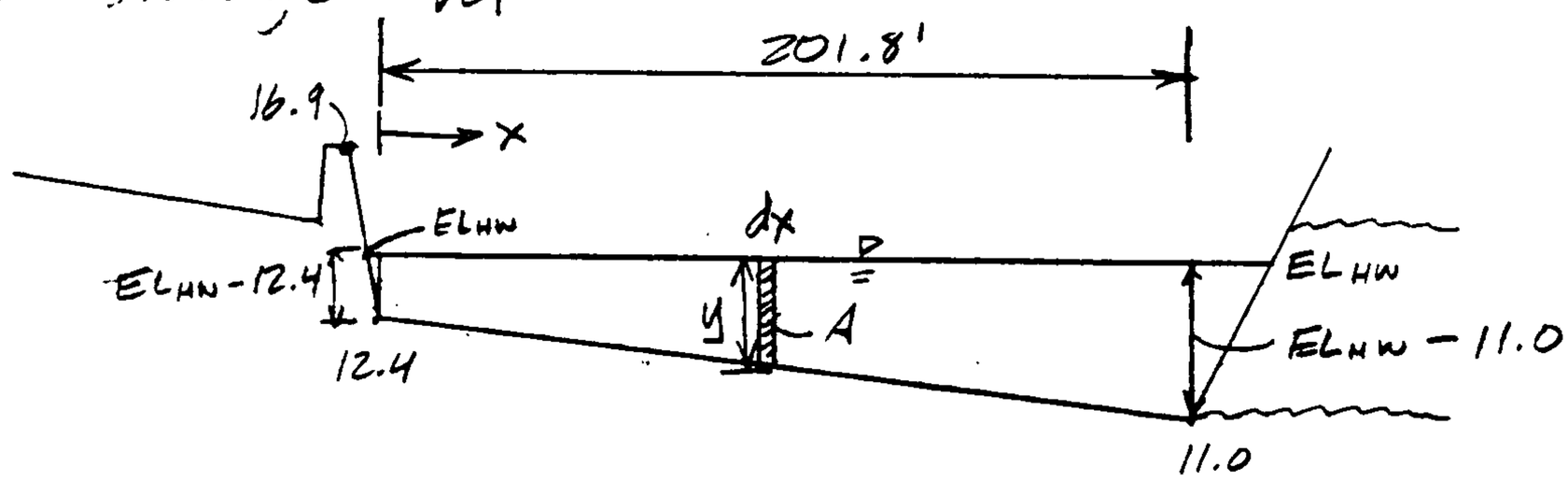

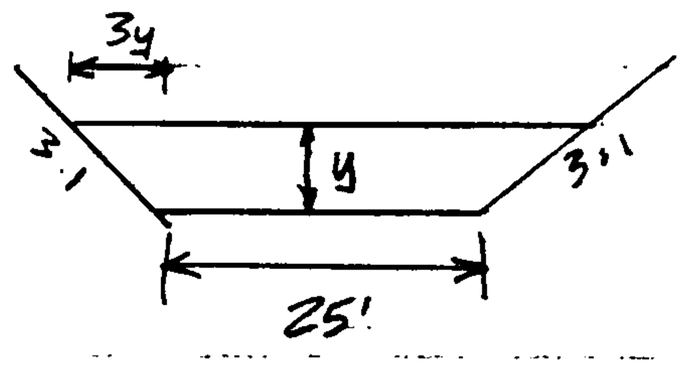

$$A = 25y + 3y \cdot y$$

$$V = \int_0^{201.8} A\,dx = \int_0^{201.8} (25y + 3y^2)\,dx \qquad y = EL_{HW} - (12.4 - .007x)$$

$$.007x = y - EL_{HW} - 12.4 \qquad x = \frac{y - EL_{HW} - 12.4}{.007} \qquad dx = \frac{1}{.007}\,d(y - EL_{HW} - 12.4) = \frac{dy}{.007}$$

$$V = \int_{EL_{HW}-12.4}^{EL_{HW}-11.0} (25y + 3y^2)\frac{dy}{.007} = \frac{1}{.007}\left[\frac{25y^2}{2} + \frac{3y^3}{3}\right]_{EL_{HW}-12.4}^{EL_{HW}-11.0}$$

PROJECT NAME LADERA WEST SHEET ____ OF ____

PROJECT NO. ____ BY JB DATE 7-92

SUBJECT ____ CH'D JD DATE 8/92

AVID ENGINEERING, INC.

In general,

$$V = \frac{1}{.007}\left[\frac{25y^2}{2} + y^3\right]_{EL_{HW}-12.4}^{EL_{HW}-11.0}$$

$Q_{out} = 100$ cfs, $EL_{HW} = 13.0$

$$V = \frac{1}{.007}\left[\frac{25y^2}{2} + y^3\right]_{0.0}^{2.0} = \frac{1}{.007}(58 - 4.72) = 7612 \text{ ft}^3$$

$$= 0.1747 \text{ ac-ft}$$

$Q_{out} = 150$ cfs $EL_{HW} = 14.0$

$$V = \frac{1}{.007}\left[\frac{25y^2}{2} + y^3\right]_{1.6}^{3.0} = \frac{1}{.007}(139.5 - 36.1) = 14{,}772 \text{ ft}^3$$

$$= 0.3391 \text{ ac-ft}$$

$Q_{out} = 200$ cfs, $EL_{HW} = 14.5$

$$V = \frac{1}{.007}\left[\frac{25y^2}{2} + y^3\right]_{2.1}^{3.5} = \frac{1}{.007}(196 - 64.4) = 18{,}802 \text{ ft}^3$$

$$= 0.4316 \text{ ac-ft}$$

$Q_{out} = 250$ cfs, $EL_{HW} = 15.2$

$$V = \frac{1}{.007}\left[\frac{25y^2}{2} + y^3\right]_{2.8}^{4.2} = \frac{1}{.007}(294.5 - 120.0) = 24{,}948 = .5727 \text{ ac-ft}$$

$Q_{out} = 300$ cfs, $EL_{HW} = 16.0$

$$V = \frac{1}{.007}\left[\frac{25y^2}{2} + y^3\right]_{3.6}^{5.0} = \frac{1}{.007}(437 - 209) = 32{,}692 = 0.7505 \text{ ac-ft}$$

PROJECT NAME LADERA WEST SHEET ____ OF ____

PROJECT NO. ____ BY JB DATE 7-92

SUBJECT ____ CH'D JD DATE 3/97

AVID ENGINEERING, INC.

$Q_{out} = 350$ cfs , $EL_{HW} = 16.8$

$$V = \frac{1}{.007}\left[\frac{25y^2}{2} + y^3\right]_{4.4}^{5.8} = \frac{1}{.007}(615 - 327) = 41{,}204 \text{ ft}^3$$

$$= 0.9459 \text{ ac-ft}$$

Stage - discharge table for Pond 2

Qout cfs	Vol ac-ft	Elevation ft
0	0	11.0
100	.17	13.0
150	.34	14.0
200	.43	14.5
250	.57	15.2
300	.75	16.0
350	.95	16.8

PROJECT NAME LADERA WEST SHEET ____ OF ____

PROJECT NO. ____ BY JB DATE 7-92

SUBJECT ____ CH'D JP DATE 7/92

AVID ENGINEERING, INC.

POND 1 For H over weir from 0 to 3.25', Find volume & storage and discharge

To find volume: use volumes calculated for pond 2 – should be approximately equal for pond 1

H	Vol	$L = 25+6(H+1.5)$	$Q = CLH^{3/2}$, $C = 3.51$
ft	ac-ft	ft	cfs
0	0	N/A	0
0.5	.17	37	45.9
1.5	.34	43	277.3
2.0	.43	46	456.7
2.7	.57	50.2	781.7
3.5	.75	OVERFLOW BANK	N/A

PROJECT NAME _____ SHEET _____ OF _____

PROJECT NO. _____ BY JB DATE 7-92

SUBJECT _____ CH'D JD DATE 8/92

AVID ENGINEERING, INC.

Stage - discharge table for pond 1

Qout cfs	Vol ac-ft	Elevation ft
0	0	15.4
46	.17	17.4
277	.34	18.4
457	.43	18.9

PROJECT NAME _____ SHEET _____ OF _____

PROJECT NO. _____ BY JB DATE 7-92

SUBJECT _____ CH'D JL DATE 8/92

AVID ENGINEERING, INC.

PEAK FLOW ANALYSIS WITH AHYMO

PROJECT NAME _____ SHEET _____ OF _____

PROJECT NO. _____ BY _____ DATE _____

SUBJECT _____ CH'D _____ DATE _____

```
AHYMO PROGRAM  AHYMO392( - AMAFCA VERSION OF HYMO - MARCH, 1992
     RUN DATE (MON/DAY/YR) = 10/19/1992
     START TIME (HR:MIN:SEC) = 16:13:21     USER NO.= C_BUCHMN.592
     INPUT FILE = C:\P\LADERA\DRAIN\LWE1019.HYM

*     LADERA WEST
*     COMPUTATIONS FOR 100-YR 6 HR STORM (TYPE 1)
*     ASSUME DEVELOPED CONDITIONS
*     NOTE:  HYDROGRAPHS ARE CALCULATED WITH METHOD FROM THE D.P.M..
*     PLATE 22.2 E-1 AND FROM INFORMATION IN DRAINAGE REPORTS FOR THE
*     RESPECTIVE AREAS
*
*
*
START                TIME=0.0 HR  PUNCH CODE=0
*
*
*
* --- BASINS DRAINING TO DOWNSTREAM OF 1ST DROP STRUCTURE (POND 1) ---
*
*
*
*HYDROGRAPH FOR UNSER BASINS E,G,H,R3 AND OURAY
STORE HYD            ID=1  HYD NO=101.0  DT=1.1117  DA=0.4733 SQ MI
                     FLOW RATES = 0 260.0 0.1 0
MODIFY TIME          ID=1  DT=0.033333 HR  CODE=1
PRINT HYD            ID=1 CODE=1

                                PARTIAL HYDROGRAPH   101.00


    RUNOFF VOLUME =      .94670 INCHES     =      23.8970 ACRE-FEET
    PEAK DISCHARGE RATE =     260.00 CFS  AT   1.100 HOURS   BASIN AREA =   .4733 SQ. MI.



*
*
*
*ROUTE RUNOFF FROM UNSER BASINS DOWN OURAY 1500' IN 60" RCP, S=2%
COMPUTE RATING CURVE CID=1  VS NO=1  CODE=-1  SLP=.02
                     DIA=5.0 FT  N=0.013

                RATING CURVE PIPE SECTION  1.0
                  WATER      FLOW       FLOW
                 SURFACE     AREA       RATE
                  ELEV       SQ FT      CFS
                   .00         .0         .0
                   .26         .4        1.9
                   .52        1.1        8.4
                   .78        2.0       19.5
                  1.04        3.0       35.1
                  1.30        4.1       54.8
                  1.56        5.2       78.1
                  1.82        6.5      104.7
```

2.35	7.7	133.1
2.35	9.1	165.1
2.61	10.3	197.4
2.87	11.6	230.5
3.13	12.9	263.4
3.39	14.2	295.2
3.65	15.3	325.0
3.91	16.5	351.6
4.17	17.5	373.8
4.43	18.4	389.7
4.69	19.1	396.2
5.00	19.6	396.2

```
COMPUTE TRAVEL TIME ID=2  REACH NO=1  NO VS=1  L=1500  SLP=.02
```

TRAVEL TIME TABLE

REACH= 1.0

WATER DEPTH FEET	AVERAGE AREA SQ.FT.	FLOW RATE CFS	TRAVEL TIME HRS
.261	.390	1.93	.0842
.521	1.086	8.39	.0539
.782	1.961	19.50	.0419
1.042	2.966	35.07	.0352
1.303	4.069	54.75	.0310
1.563	5.246	78.12	.0280
1.824	6.479	104.66	.0258
2.084	7.749	133.82	.0241
2.345	9.043	164.96	.0228
2.606	10.345	197.43	.0218
2.866	11.641	230.49	.0210
3.127	12.918	263.36	.0204
3.387	14.159	295.17	.0200
3.648	15.348	324.96	.0197
3.908	16.467	351.63	.0195
4.169	17.492	373.81	.0195
4.429	18.395	389.68	.0197
4.690	19.130	396.21	.0201
5.000	19.635	396.21	.0206

```
ROUTE            ID=2  HYD NO=101.1  INFLOW ID=1  DT=0.0
*HYDROGRAPH
PRINT HYD        ID=2  CODE=1
```

PARTIAL HYDROGRAPH 101.10

RUNOFF VOLUME = .94671 INCHES = 23.8973 ACRE-FEET
PEAK DISCHARGE RATE = 257.69 CFS AT 1.133 HOURS BASIN AREA = .4733 SQ. MI.

```
*
*
*
*HYDROGRAPH FOR E.R.A. BASINS A.B.E1
STORE HYD        ID=1  HYD NO=102.0  DT=0.163 HRS  DA=0.07891 SQ MI
```

```
                    FLOW RATES = 0 96.9 77.6 58 38.6 19.1 0
PRINT HYD           ID=1 CODE=1

                                PARTIAL HYDROGRAPH   102.00


    RUNOFF VOLUME =      .98826 INCHES     =       3.9166 ACRE-FEET
    PEAK DISCHARGE RATE =      96.90 CFS  AT    .163 HOURS   BASIN AREA =   .0789 SQ. MI.


*ADD HYDROGRAPHS FOR FLOW IN 60" S.D. JUST W. OF SITE
ADD HYD             ID=1  HYD NO=102.1  ID=1  ID=2
PRINT HYD           ID=1  CODE=1

                                PARTIAL HYDROGRAPH   102.10


    RUNOFF VOLUME =      .93973 INCHES     =      27.6760 ACRE-FEET
    PEAK DISCHARGE RATE =     257.69 CFS  AT   1.133 HOURS   BASIN AREA =   .5522 SQ. MI.


*
*
*
*ROUTE FLOW IN 60" S.D. DOWN OURAY TO CHANNEL, L=660, S=2%
*USE PREVIOUS RATING CURVE
COMPUTE TRAVEL TIME ID=2  REACH NO=1  NO VS=1  L=660  SLP=.02

                          TRAVEL TIME TABLE
                                       REACH=  1.0

                          WATER      AVERAGE    FLOW       TRAVEL
                          DEPTH      AREA       RATE       TIME
                          FEET       SQ.FT.     CFS        HRS
                             .261       .390       1.93      .0370
                             .521      1.086       8.39      .0237
                             .782      1.361      19.50      .0184
                            1.042      2.966      35.07      .0155
                            1.303      4.069      54.75      .0136
                            1.563      5.246      78.12      .0123
                            1.824      6.479     104.66      .0113
                            2.084      7.749     133.82      .0106
                            2.345      9.043     164.96      .0101
                            2.606     10.345     197.43      .0096
                            2.866     11.641     230.49      .0093
                            3.127     12.918     263.36      .0090
                            3.387     14.159     295.17      .0088
                            3.648     15.348     324.96      .0087
                            3.908     16.467     351.63      .0086
                            4.169     17.492     373.81      .0086
                            4.429     18.395     389.68      .0087
                            4.690     19.130     396.21      .0089
                            5.000     19.635     396.21      .0091
ROUTE               ID=2  HYD NO=102.2  INFLOW ID=1  DT=0.0
```

```
*HYDROGRAPH
PRINT HYD          ID=2  CODE=1

                              PARTIAL HYDROGRAPH   102.00


    RUNOFF VOLUME =      .93973 INCHES     =      37.6760 ACRE-FEET
    PEAK DISCHARGE RATE =     257.81 CFS  AT   1.133 HOURS   BASIN AREA =   .5622 SQ. MI.



*
*
*
*HYDROGRAPH FOR E.R.A. BASIN E2-A (NORTH OF L.W. SUBDIVISION)
STORE HYD          ID=3  HYD NO=102.5  DT=0.09217 HRS  DA=.00848 SQ MI
                   FLOW RATES = 0 12.9 11.1 9.4 7.6 5.8 4.1 2.3 0.5 0
PRINT HYD          ID=3 CODE=1

                              PARTIAL HYDROGRAPH   102.50


    RUNOFF VOLUME =      .90445 INCHES     =        .4090 ACRE-FEET
    PEAK DISCHARGE RATE =      12.90 CFS  AT    .092 HOURS   BASIN AREA =   .0085 SQ. MI.


*ADD HYDROGRAPHS
ADD HYD            ID=1  HYD NO=102.5  ID=3  ID=2
PRINT HYD          ID=1  CODE=1

                              PARTIAL HYDROGRAPH   102.50


    RUNOFF VOLUME =      .93911 INCHES     =      28.0824 ACRE-FEET
    PEAK DISCHARGE RATE =     257.81 CFS  AT   1.133 HOURS   BASIN AREA =   .5607 SQ. MI.



*
*
*
*HYDROGRAPH FOR E.R.A. BASIN C (SITE OF L.W. SUBDIVISION)
STORE HYD          ID=2  HYD NO=103.0  DT=0.1982 HRS  DA=.02156 SQ MI
                   FLOW RATES = 0 29.5 22.4 15.2 8.1 0.9 0
PRINT HYD          ID=2 CODE=1

                              PARTIAL HYDROGRAPH   103.00


    RUNOFF VOLUME =     1.08407 INCHES     =       1.2465 ACRE-FEET
    PEAK DISCHARGE RATE =      29.50 CFS  AT    .198 HOURS   BASIN AREA =   .0216 SQ. MI.


*ADD HYDROGRAPHS
```

```
ADD HYD            ID=1  HYD NO=103.1  ID=1  ID=3
PRINT HYD          ID=1  CODE=1

                              PARTIAL HYDROGRAPH   103.10


    RUNOFF VOLUME =      .94422 INCHES     =      29.3209 ACRE-FEET
    PEAK DISCHARGE RATE =     257.81 CFS  AT   1.133 HOURS   BASIN AREA =   .5823 SQ. MI.



*
*
*
*HYDROGRAPH FOR VOLCANO BUSINESS PARK
STORE HYD          ID=2  HYD NO=104.0  DT=0.45 HRS  DA=0.1073 SQ MI
                   FLOW RATES = 0 120 89 58 27 0
PRINT HYD          ID=2 CODE=1

                              PARTIAL HYDROGRAPH   104.00


    RUNOFF VOLUME =     1.91063 INCHES     =      10.9338 ACRE-FEET
    PEAK DISCHARGE RATE =     120.00 CFS  AT    .450 HOURS   BASIN AREA =   .1073 SQ. MI.


*ADD HYDROGRAPHS
ADD HYD            TOTAL ID=1  HYD NO=104.1  ADD ID=1 TO ID=2
PRINT HYD          ID=1  CODE=1

                              PARTIAL HYDROGRAPH   104.10


    RUNOFF VOLUME =     1.08185 INCHES     =      39.7860 ACRE-FEET
    PEAK DISCHARGE RATE =     330.74 CFS  AT   1.133 HOURS   BASIN AREA =   .6896 SQ. MI.



*
*
*
*HYDROGRAPH FOR P.N.M. EASEMENT EAST OF SITE
STORE HYD          ID=2  HYD NO=105.0  DT=0.4073 HRS  DA=0.0089 SQ MI
                   FLOW RATES = 0 2.7 0.1 0
PRINT HYD          ID=2 CODE=1

                              PARTIAL HYDROGRAPH   105.00


    RUNOFF VOLUME =      .19856 INCHES     =        .0943 ACRE-FEET
    PEAK DISCHARGE RATE =       2.70 CFS  AT    .407 HOURS   BASIN AREA =   .0089 SQ. MI.


*ADD HYDROGRAPHS
```

```
ADD HYD            ID=1  HYD NO=105.1  ID=1  ID=1
PRINT HYD          ID=1  CODE=1

                              PARTIAL HYDROGRAPH   105.10


    RUNOFF VOLUME =     1.07055 INCHES     =      39.8785 ACRE-FEET
    PEAK DISCHARGE RATE =     330.74 CFS  AT   1.133 HOURS   BASIN AREA =   .6985 SQ. MI.



*
*
*
*ROUTE TOTAL THROUGH POND 1
ROUTE RESERVOIR     ID=4  HYD NO 200.1  INFLOW ID=1  CODE=24
                    OUTFLOW (CFS)       STORAGE (AC FT)       ELEV (FT)
                    0                   0                     15.4
                    46                  .17                   17.4
                    277                 .34                   18.4
                    457                 .43                   18.9

  * * * * * * * * * * * * * * * * *

    TIME      INFLOW    ELEV      VOLUME    OUTFLOW
    (HRS)     (CFS)     (FEET)    (AC-FT)   (CFS)

     .00        .00     15.40      .000       .00
     .80     307.09     18.48      .355    307.02
    1.60     192.30     18.05      .280    195.01
    2.40       1.01     15.49      .008      2.08
 PEAK DISCHARGE =      330.621 CFS - PEAK OCCURS AT HOUR    1.13
 MAXIMUM WATER SURFACE ELEVATION =      18.549
 MAXIMUM STORAGE =         .3668 AC-FT      INCREMENTAL TIME=     .033333HRS

PRINT HYD           ID=4  CODE=1

                              PARTIAL HYDROGRAPH   200.10


    RUNOFF VOLUME =     1.07055 INCHES     =      39.8785 ACRE-FEET
    PEAK DISCHARGE RATE =     330.62 CFS  AT   1.133 HOURS   BASIN AREA =   .6985 SQ. MI.


*
*
*
* --- BASINS DRAINING TO BELOW THE SECOND DROP STRUCTURE (POND 2) ---
*
*
*
*HYDROGRAPH FOR RANCHO ATRISCO UNITS 2,3,7,10
*NOTE: 49.8 C.F.S USED AS PEAK FLOW
STORE HYD           ID=2  HYD NO=300.0  DT=0.4533 HRS  DA=0.1073 SQ MI
                    FLOW RATES = 0 49.8 29.0 8.2 0
```

```
PRINT HYD          ID=2 CODE=1

                                    HYDROGRAPH FROM AREA   300.00

    RUNOFF VOLUME =      .56954 INCHES     =       3.2592 ACRE-FEET
    PEAK DISCHARGE RATE =      49.80 CFS  AT    .463 HOURS   BASIN AREA =   .1073 SQ. MI.


*DIVIDE RHONDA DE LECH. FLOW IN HALF--HALF FLOWS IN RUNDOWN TO UPSTREAM OF
*CULVERTS, HALF FLOWS TO DOWNSTREAM OF CULVERTS
DIVIDE HYD         ID=2  PERCENT=-50 TO ID=2  HYD I=300.1
                                        ID=3  HYD II=300.2
PRINT HYD          ID=2  CODE=1

                                    HYDROGRAPH FROM AREA   300.10

    RUNOFF VOLUME =      .56954 INCHES     =       1.6296 ACRE-FEET
    PEAK DISCHARGE RATE =      24.90 CFS  AT    .453 HOURS   BASIN AREA =   .0537 SQ. MI.


*ADD TO TOTAL
ADD HYD            TOTAL ID=1  HYD NO=300.3  ADD ID=4 TO ID=2
PRINT HYD          ID=1  CODE=1

                                    HYDROGRAPH FROM AREA   300.30

    RUNOFF VOLUME =     1.03280 INCHES     =      41.4273 ACRE-FEET
    PEAK DISCHARGE RATE =     339.92 CFS  AT   1.133 HOURS   BASIN AREA =   .7521 SQ. MI.


*
*
*
*HYDROGRAPH FOR RANCHO ATRISCO UNIT 8
STORE HYD          ID=2  HYD NO=301.0  DT=.1667 HRS  DA=0.01625 SQ MI
                   FLOW RATES = 0 31.6 19.4 7.1 0
PRINT HYD          ID=2 CODE=1

                                    HYDROGRAPH FROM AREA   301.00

    RUNOFF VOLUME =      .92358 INCHES     =        .8004 ACRE-FEET
    PEAK DISCHARGE RATE =      31.60 CFS  AT    .167 HOURS   BASIN AREA =   .0163 SQ. MI.


*TOTAL
ADD HYD            TOTAL ID=1  HYD NO=301.1  ADD ID=1 TO ID=2
PRINT HYD          ID=1  CODE=1
```

HYDROGRAPH FROM AREA 301.10

RUNOFF VOLUME = 1.02953 INCHES = 42.1885 ACRE-FEET
PEAK DISCHARGE RATE = 345.05 CFS AT .467 HOURS BASIN AREA = .7684 SQ. MI.

*
*
*
*ROUTE THROUGH POND 2 (DIRECTLY UPSTREAM OF CULVERTS)
ROUTE RESERVOIR ID=5 HYD NO 200.2 INFLOW ID=1 CODE=24

OUTFLOW (CFS)	STORAGE (AC FT)	ELEV (FT)
0	0	11.0
100	.17	13.0
150	.34	14.0
200	.43	14.5
250	.57	15.2
300	.75	16.0
350	.95	16.8

* * * * * * * * * * * * * * * *

TIME (HRS)	INFLOW (CFS)	ELEV (FEET)	VOLUME (AC-FT)	OUTFLOW (CFS)
.00	.00	11.00	.000	.00
.80	323.97	16.41	.852	325.49
1.60	195.01	14.57	.445	205.34
2.40	2.08	11.06	.005	2.76

PEAK DISCHARGE = 338.859 CFS - PEAK OCCURS AT HOUR .50
MAXIMUM WATER SURFACE ELEVATION = 16.622
MAXIMUM STORAGE = .9054 AC-FT INCREMENTAL TIME= .033333HRS

PRINT HYD ID=5 CODE=1

PARTIAL HYDROGRAPH 200.20

RUNOFF VOLUME = 1.02953 INCHES = 42.1885 ACRE-FEET
PEAK DISCHARGE RATE = 338.86 CFS AT .500 HOURS BASIN AREA = .7684 SQ. MI.

ALLOWABLE = 360 cfs

OK

FINISH

NORMAL PROGRAM FINISH END TIME (HR:MIN:SEC) = 16:13:22

HYDROGRAPH FOR OURAY 60" STORM DRAIN AT TODOS SANTOS ST.

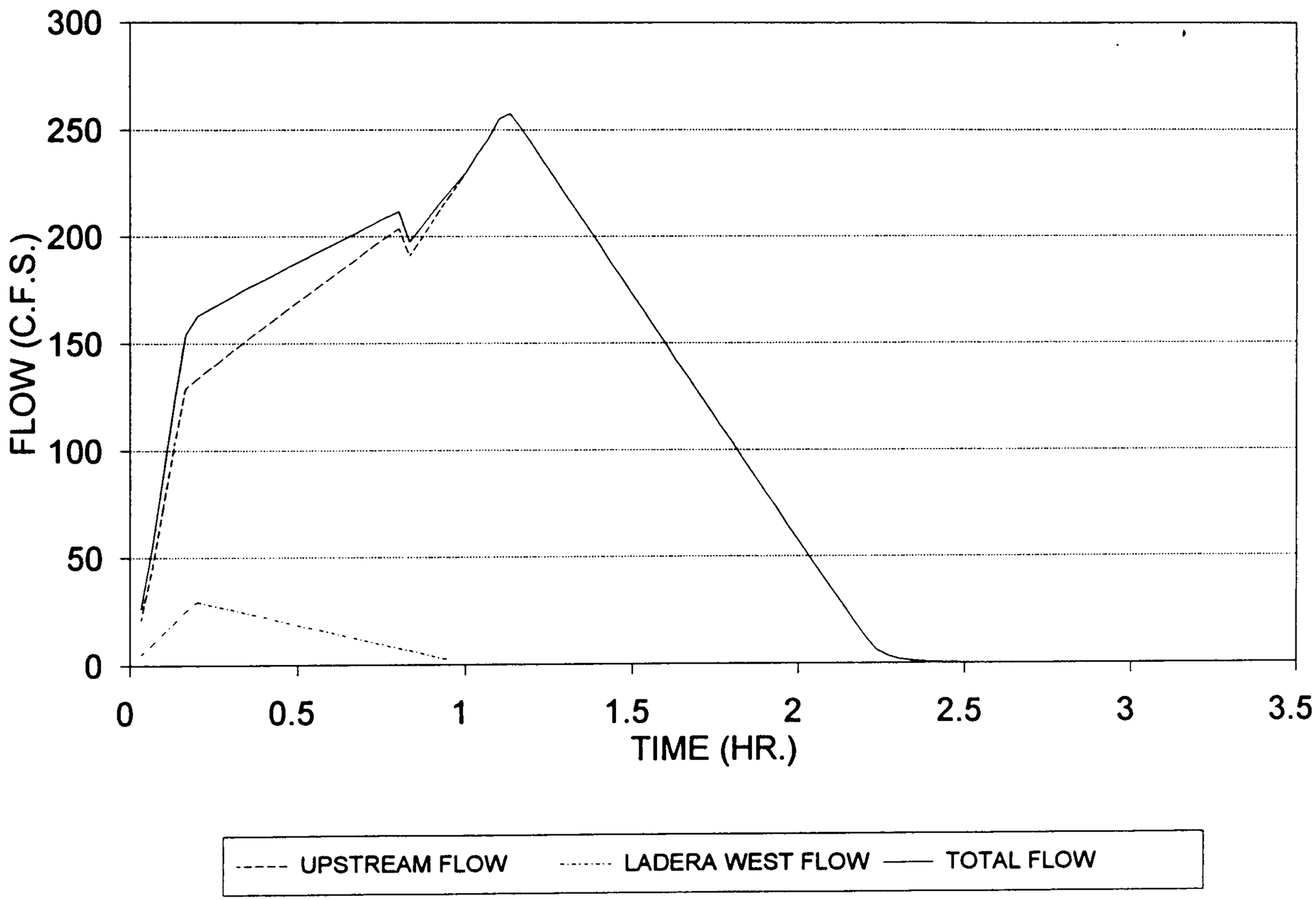

HYDROGRAPH FOR 60" STORM DRAIN AT OUTLET INTO QUICKWATER CHANNEL

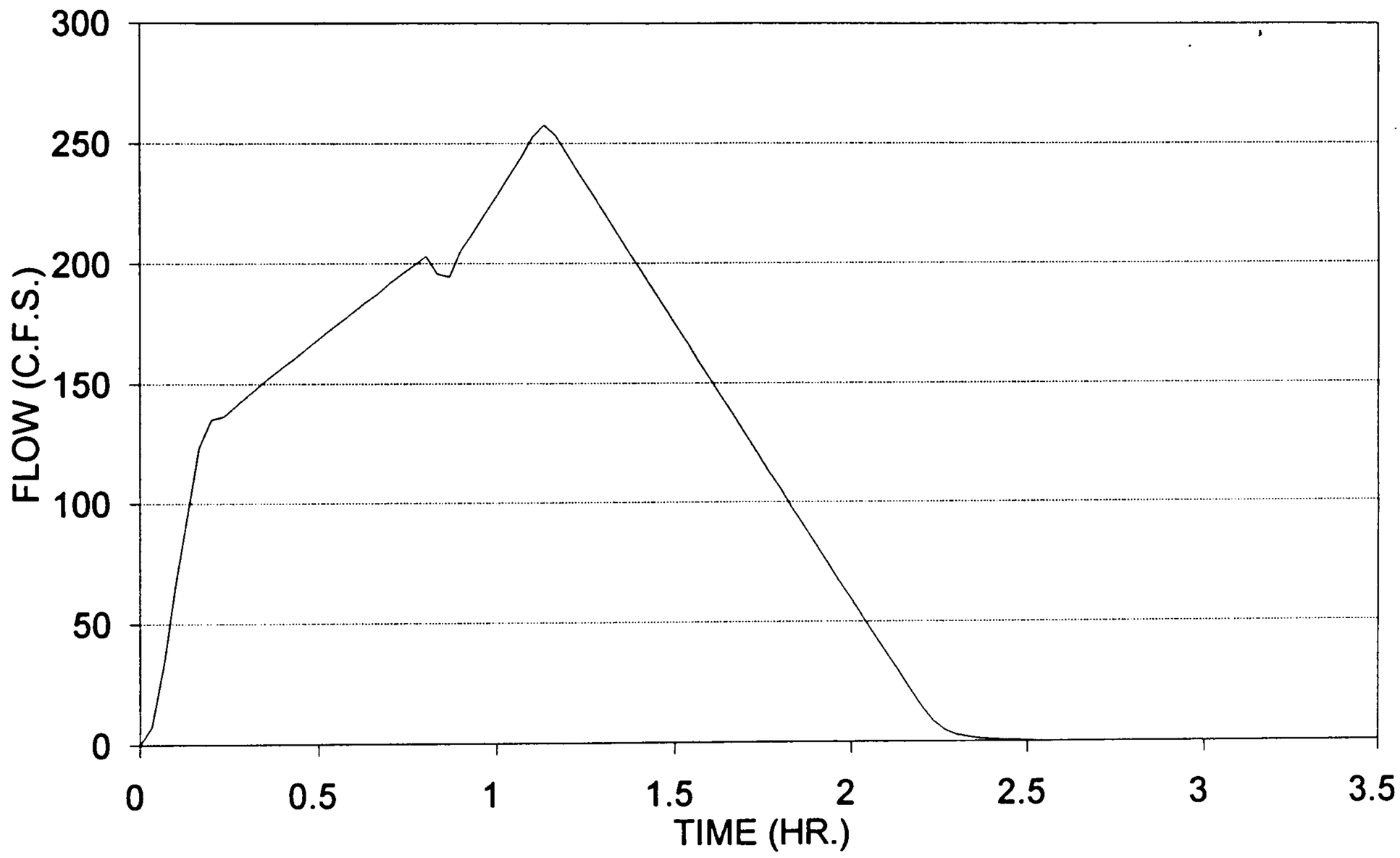

HYDROGRAPH FOR 42" CULVERTS UNDER RHONDA DE LECHUSAS

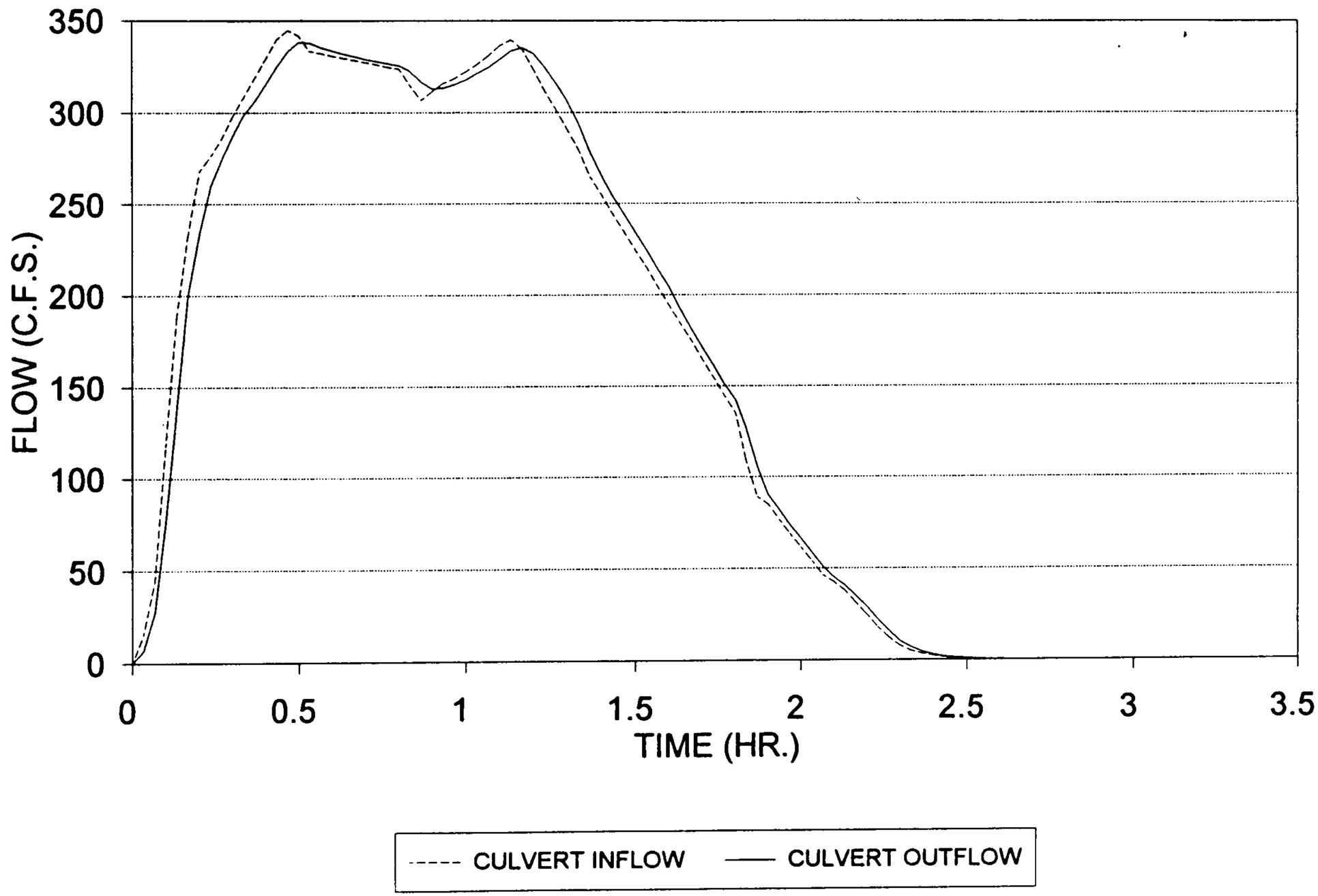

AVID ENGINEERING, INC.

LADERA WEST

HYDRAULIC GRADELINE ANALYSIS

PROJECT NAME _____ SHEET _____ OF _____

PROJECT NO. _____ BY _____ DATE _____

SUBJECT _____ CH'D _____ DATE _____

NOTES

- HYDRAULIC GRADE LINE ANALYSIS ASSUMES THAT ALL FLOW IS COLLECTED BY CATCH BASIN (C) ONLY. CATCH BASINS (A) AND (B) ARE FOR NUISANCE FLOWS ONLY.

*- ASSUME INLET CONTROL; $1.2V^2/2g$, NO ALLOWANCE FOR HORIZONTAL FLOW COMPONENT, ∴ CONSERVATIVE.

SUMMARY OF HYDRAULIC CALCULATIONS

CLOSED CONDUIT

BY: RLB
DATE: 1/16/93
SHEET: 1 OF: 1

PROJECT: LADERA WEST

LINE:

1	2	3	4	5	6	7	8	9	10	11	12	13	14	15	16	17	18	19	20	21	22	
										JUNCTION		LOSSES										
STATION	STRUCT	D	Q	A	V	K	S_f	L	Δ	D	θ	h_f	h_b	h_j	h_{mh}	h_f	h_{misc}	Σ	E.G.	h_v	H.G.	COMMENTS
10+18	OUTLET																		20^{5}	0.9	19^{6}	Quick Flow Chan. (.8d)
		36"	55	7.07	7.78	667	.006	287				2^{0}						2^{0}	22^{5}	0.9	21^{6}	
13+05	MH														.5	.03		0^{5}	23^{0}	0.9	22^{4}	
		42"	55	9.621	5.72	1006	.003	123				0^{4}						0^{4}	23^{4}	0.5	22^{9}	
*	INLET																0.6	0^{6}	24^{0}	0.5	23^{5}	FB = 0.83'
		24"	26	3.14	8.27	226	.013	210				2^{8}						2^{8}	26^{8}	1.1	25^{7}	
*	INLET																	1^{3}	28^{1}	1.1	27^{0}	

REMARKS:

MANNING'S n: 0.013

AVID

TODOS SANTOS/SANTA CATARINA

INLET & OVERFLOW CHANNEL DESIGN

PROJECT NAME _____ SHEET _____ OF _____

PROJECT NO. _____ BY _____ DATE _____

SUBJECT _____ CH'D _____ DATE _____

AVID ENGINEERING, INC.

DESIGN CATCH BASIN AT TODOS SANTOS AND SANTA CATARINA.

- SUMP CONDITION, SIZE INLET SO THAT FLOW DEPTH DOES NOT EXCEED 8" (CURB DEPTH).
- 100YR STREET FLOW RATE = 43 CFS, d = .75 ft (9")

USE QUADRUPLE GRATE ANALYZED AS 3 SIDED WEIR, $Q = 65.7\,h^{1.5}$ (SEE NOMOGRAPH)

$Q_{max} = 50$ cfs @ d = .83' (10") [ok]

NOTE: ANALYSIS DOES NOT INCLUDE CURB INLET FLOW (approx. 14 CFS), RESERVED FOR SAFETY AND CLOGGING FACTOR.

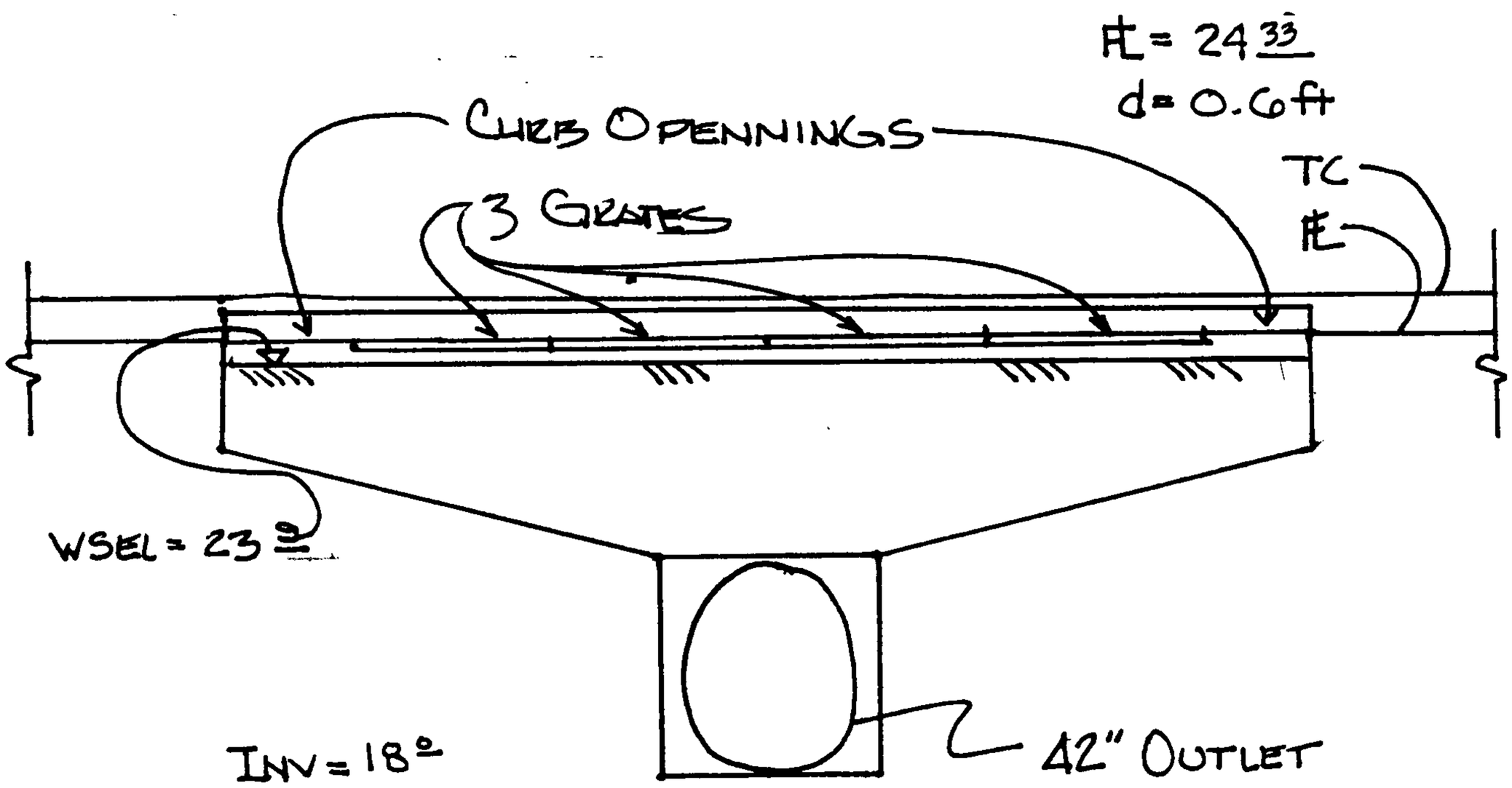

INLET CONTROL = $1.2V^2/2g = 1.2\left(\frac{55}{9.621}\right)^2 / 64.4^2$

PROJECT NAME LADERA WEST SUBD. SHEET 1 OF 5
PROJECT NO 2107.50 BY RLB DATE 1/13/93
SUBJECT HYDRAULICS CH'D DATE

CATCH BASIN CALCULATION SHEET

Sht.___ of___

PROJECT _____ CALCULATED BY _____

DESIGN FREQUENCY _____ DATE _____

FLOW DIAGRAM (Indicate street slopes)

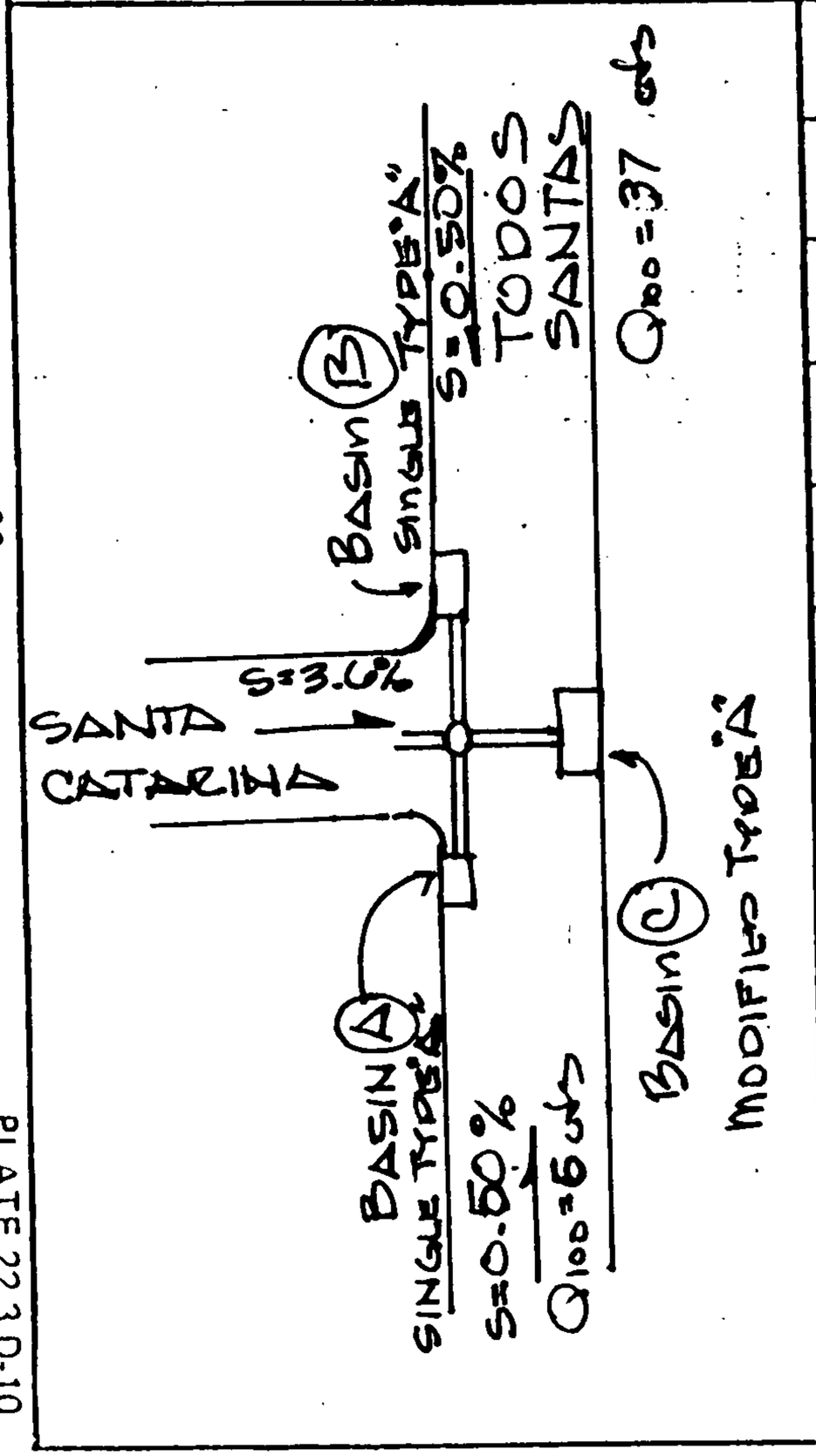

Sym.	Drain. Area	Q Total	Q Inter.	Cap. of ½ Street	Gutter "d"	C.B. No.	C.B. Size	Connector Pipe Head	Connector Pipe L	Connector Pipe Dia.	V Depth
	BASIN (A)	3.0	2.2	25 cfs*	.35'	1	"A"				
		0.8	BYPASS								
	BASIN (B)	37/2 18.5	7.2	25 cfs*	0.62	1	"A"				
		11.3	BY PASS								
	TOTAL = 6.0 + 37.0 = 43 cfs										
	43 − 2.2 + 11.3 = 29.5 BASIN (C)										
	BASIN (C)	29.5	29.5	25*	0.6'	4	A	SUMP CONDITION ANALYSIS			
		0 BY-PASS									

* BASED ON FLOW TO 0.67 depth (TOC) maximum.

2/5

AVID ENGINEERING, INC

DETERMINE LOCATION WHERE STD CURB AND GUTTER IS REQUIRED IN TODOS SANTOS.

CONTRIBUTING AREA FROM SOUTH: 2.6 acres
BY PRO RATA FOR BASINS E2-A & C

$Q_{100} = 30\text{ cfs} + 13\text{ cfs} = 43\text{ cfs}$

CONTRIBUTING AREA = 19.23 acres

$$\frac{Q_{south}}{43\text{ cfs}} = \frac{2.6\text{ acres}}{19.23\text{ acres}} \qquad Q_{south} = 6\text{ cfs}$$

$Q_{NORTH} = 43 - 6 = 37\text{ cfs}$

NOTE: FLOW RATES ARE PRO RATED FROM EACH CONTRIBUTING BASIN. THIS IS CONSERVATIVE SINCE ADDING HYDROGRAPHS RESULTS IN LESSER PEAK FLOW RATES DUE TO ATTENUATION AND VARYING TIMES OF CONCENTRATION.

PROJECT NAME _____ SHEET 3 OF 5
PROJECT NO. _____ BY _____ DATE _____
SUBJECT _____ CH'D _____ DATE _____

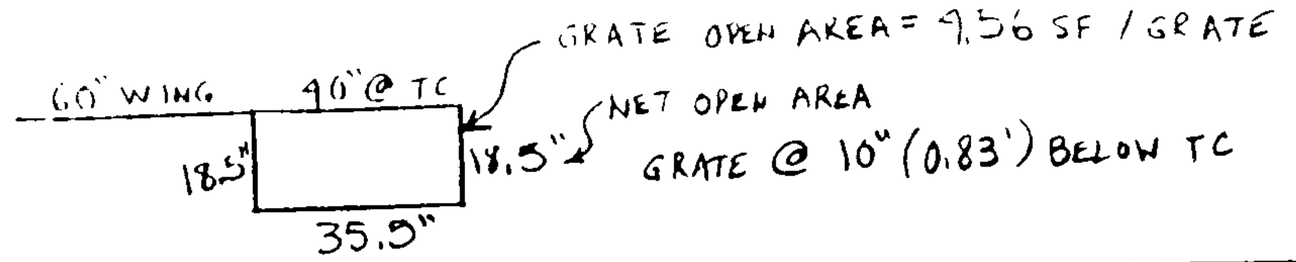

EQUATION	SGL A	DBL A	TRPL A	QDPL A
1) ORIFICE	$22.0\,h^{0.5} + 16.5\,h^{1.5}$	$43.9\,h^{0.5} + 16.5\,h^{1.5}$	$65.9\,h^{0.5} + 16.5\,h^{1.5}$	$87.8\,h^{0.5} + 16.5\,h^{1.5}$
2) 3-SIDED WEIR ($h \le 0.83'$)	$36.4\,h^{1.5}$	$46.2\,h^{1.5}$	$56.0\,h^{1.5}$	$65.7\,h^{1.5}$
3) 4-SIDED WEIR ($h > 0.83'$)	ADD TO 2): $11(h-.83)^{1.5}$	ADD TO 2): $22(h-.83)^{1.5}$	ADD TO 2): $33(h-.83)^{1.5}$	ADD TO 2): $44(h-.83)^{1.5}$

1) $Q = 0.6A\sqrt{2gh} + 3.3(5')h^{1.5}$

2) & 3) $Q = 3.3\,P\,h^{1.5}$

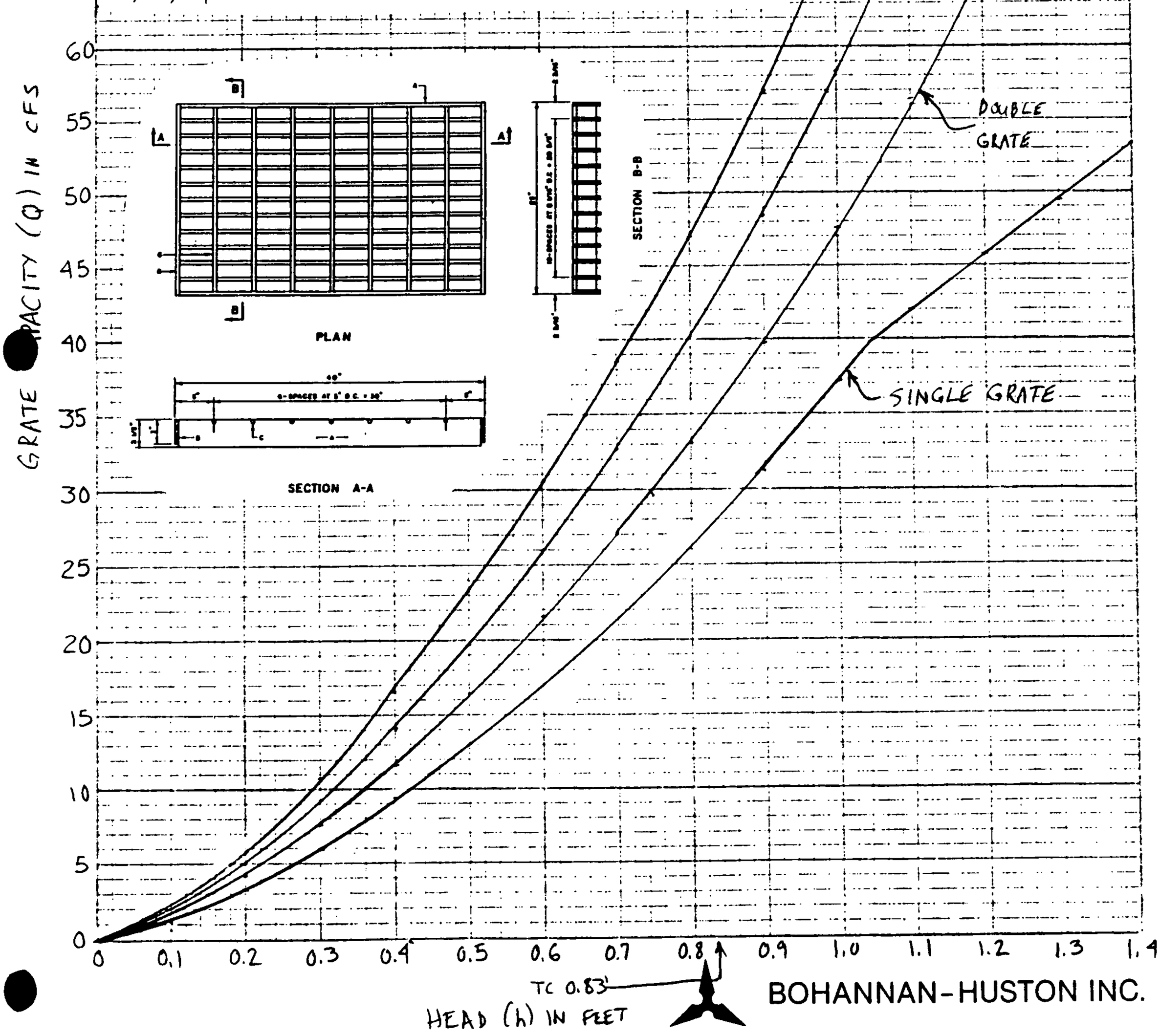

BOHANNAN-HUSTON INC.

PROJECT NAME _____ SHEET 4 OF 5

PROJECT NO. _____ BY RLB DATE _____

SUBJECT RATING CURVE FOR TYPE A INLETS CH'D _____ DATE _____

5/5

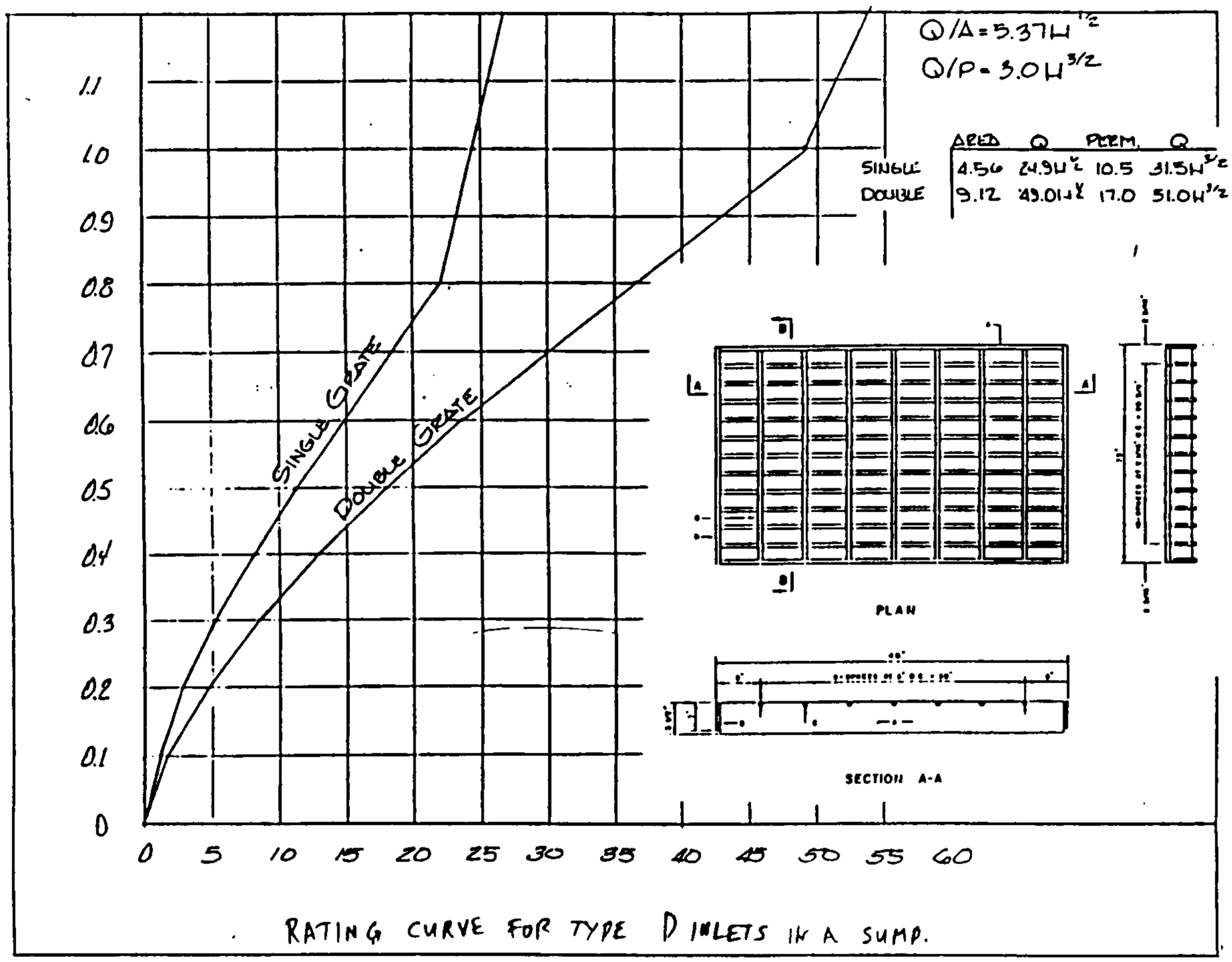

RATING CURVE FOR TYPE D INLETS IN A SUMP.

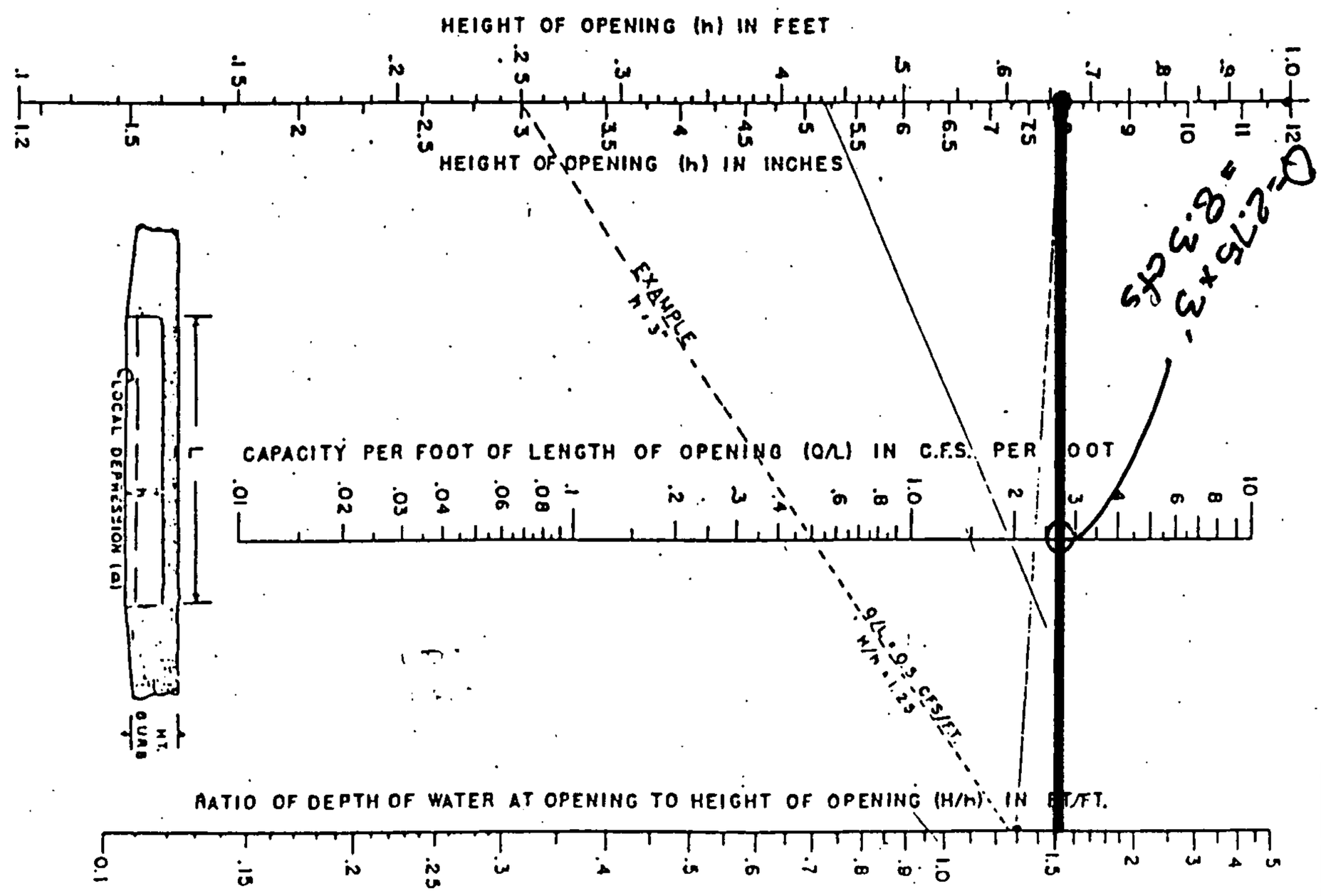

FIGURE 6

NOMOGRAPH FOR CAPACITY OF CURB OPENING INLETS AT LOW POINTS

AVID ENGINEERING INC

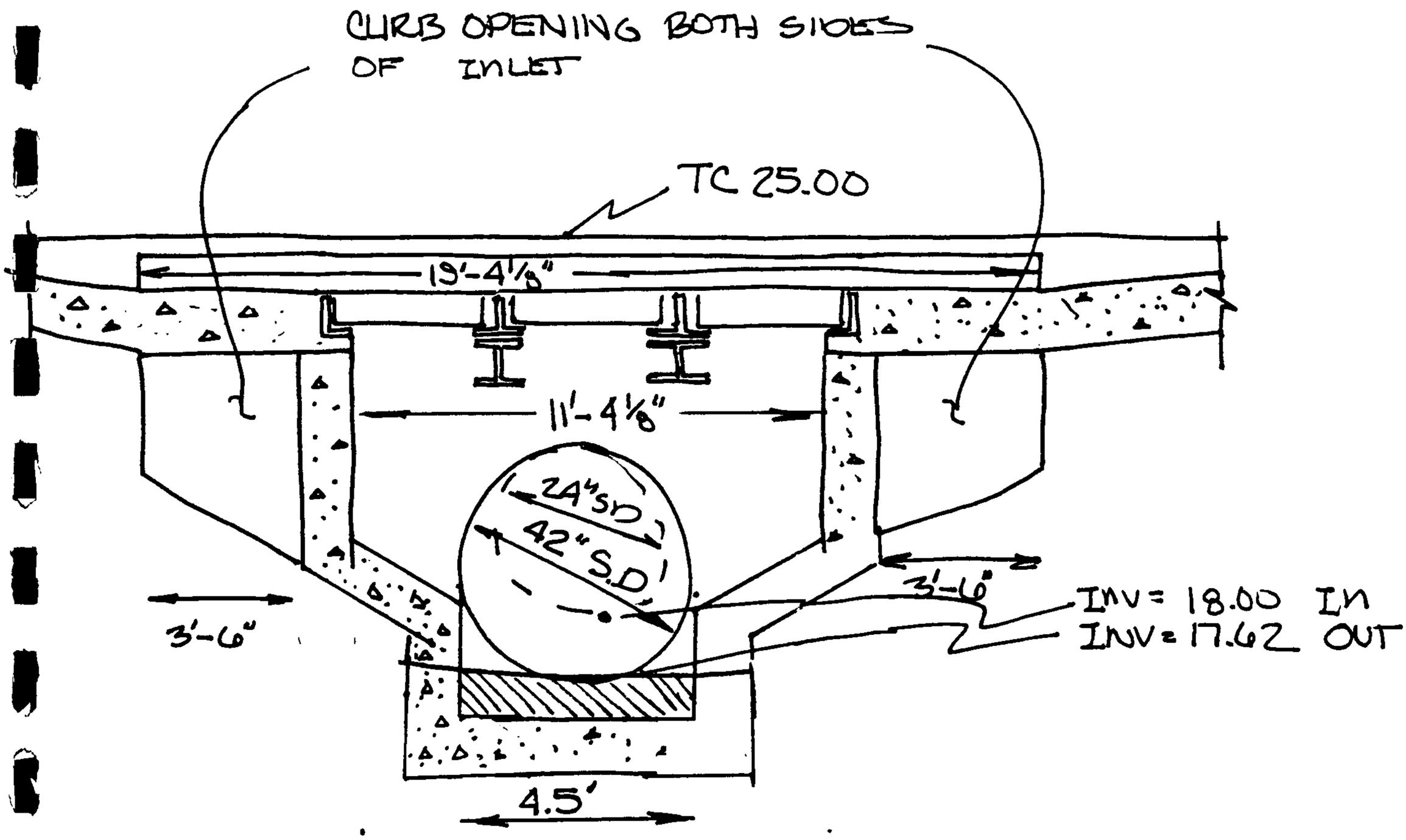

DETAIL A

TYPE "A" MODIFIED CATCH BASIN, TRIPLE GRATE,

SCALE 1" = 4'

REFERENCE COA DWGS 2201, 2202, 2205, 2207

PROJECT NAME LADERA WEST SHEET 1 OF 2

PROJECT NO. DETAILS BY DATE

SUBJECT CH'D DATE

AVILA Engineering Inc

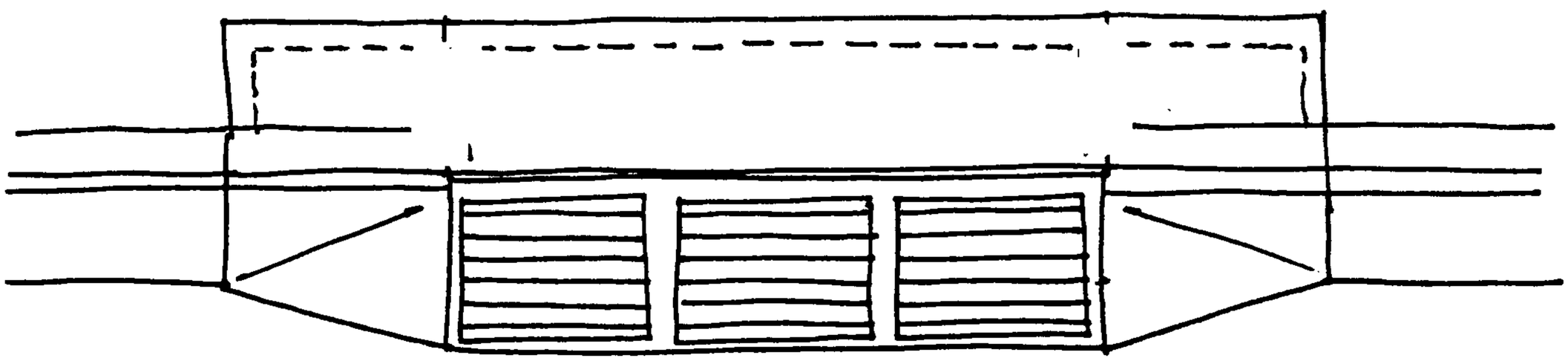

Plan View

PROJECT NAME _____ SHEET 2 OF 2

PROJECT NO. _____ BY _____ DATE _____

SUBJECT _____ CH'D _____ DATE

AVID ENGINEERING, INC.

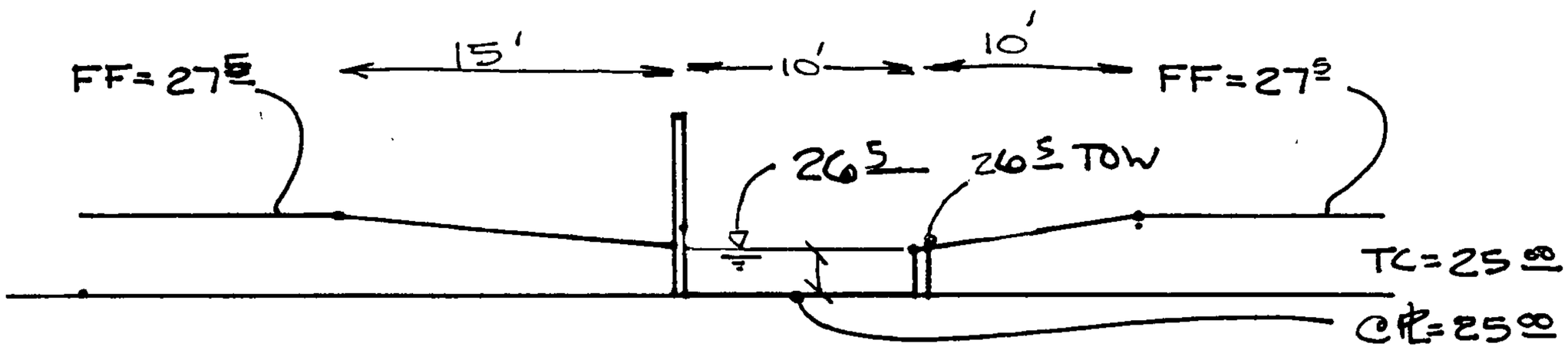

Compute Capacity Of Overflow Channel

- Assume 100% of Design Flow In Channel (42" Storm Carries No Flow). These are conservative assumptions.

Weir Analysis

$Q = CLH^{3/2}$ * $H = FF - \text{ELEV.} @ ℄$

$= 27.0 - 25.33 = 1.67'$

Capacity $C = 3.0$ $L = 10'$

$Q = 3.0 \times 10' \times (2.2)^{3/2}$

$= 95$ cfs >> $Q_{100} = 55$ cfs

Depth @ Q = 55 cfs

$55 = 3.0 \times 10' \times (d)^{3/2}$ 0.70' FB

$d = 1.5'$ M.W.S. EL. = 25.33 + 1.5 = 26.83 [ok]

* Handbook of Hydraulics, Brater & King, 6th Edition

Channel Analysis

$Q = 55$ cfs $N = .030$ $S = 2.83\%$ by Mannings

$\Rightarrow d = 0.83'$ $V = 6.64$ fps

PROJECT NAME	LADERA WEST	SHEET	1	OF	1
PROJECT NO.	2107.50	BY	RLB	DATE	1/16/93
SUBJECT		CH'D		DATE	

AVIL ENGINEERING

- DETERMINE LOCATION OF TRANSITION FROM STD C&G to ROLL TYPE C&G, TODOS SANTOS.

SOUTH SIDE ANALYSIS

- Q_{100} SOUTH = 60 cfs (See Previous Computations)

MAX. DEPTH = 24.93, INLET DESIGN, 0.6 ft
MAX. DEPTH = 0.35', Channel Design, normal depth
Note: 0.35' ~ Mountable Curb depth, Inlet Design controls.

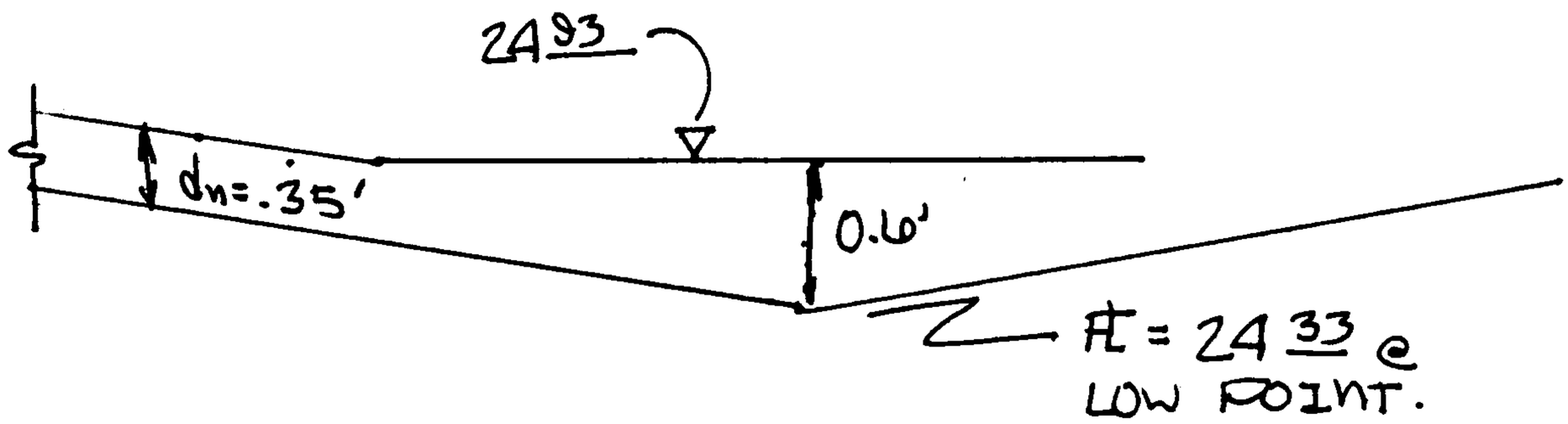

- ALL TC above Elevation 24.93, on South Todos Santos and with Flowlines above 24.6 can be Roll Type Curb.
- Transition At LOT 140/141 LOT LINE.

NORTH SIDE ANALYSIS

- Q_{100} = 37 cfs Solve for Slope where dn ≤ 0.33 ft. From PLATE 22.3, D-1 S = 2.6%
- ALL AREAS where C&G exceeds 2.6%.

USE Std C&G throughout North Todos Santos.

PROJECT NAME _____ SHEET 1 OF 1
PROJECT NO _____ BY _____ DATE _____
SUBJECT _____ CH'D _____ DATE _____

AVID ENGINEERING INC

SANTA CATARINA OFFSITE INLET

PROJECT NAME _____ SHEET _____ OF _____

PROJECT NO. _____ BY _____ DATE _____

SUBJECT _____ CH'D _____ DATE _____

AVID ENGINEERING, INC.

SIZE CHANNEL INLET - OFF-SITE FLOW

$Q_{100} = 26.0$ cfs (BASINS A, B, & EL)

MAXIMUM WSEL = 5132.5'
SIZE WEIR TO PASS 125% of 26.0 cfs = 32.5 cfs

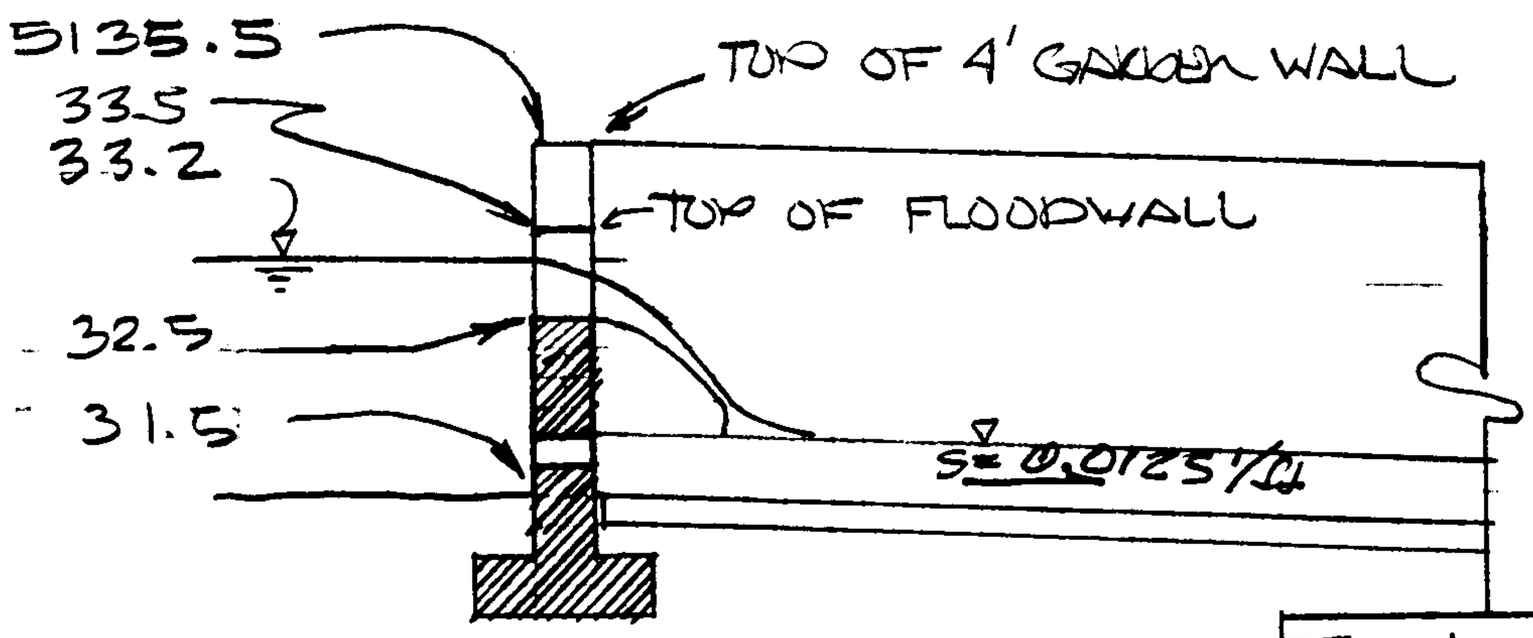

Total Flow for Self Cleaning Slot Orifice, 8-4" ϕ holes and Weir = 37.5 cfs.

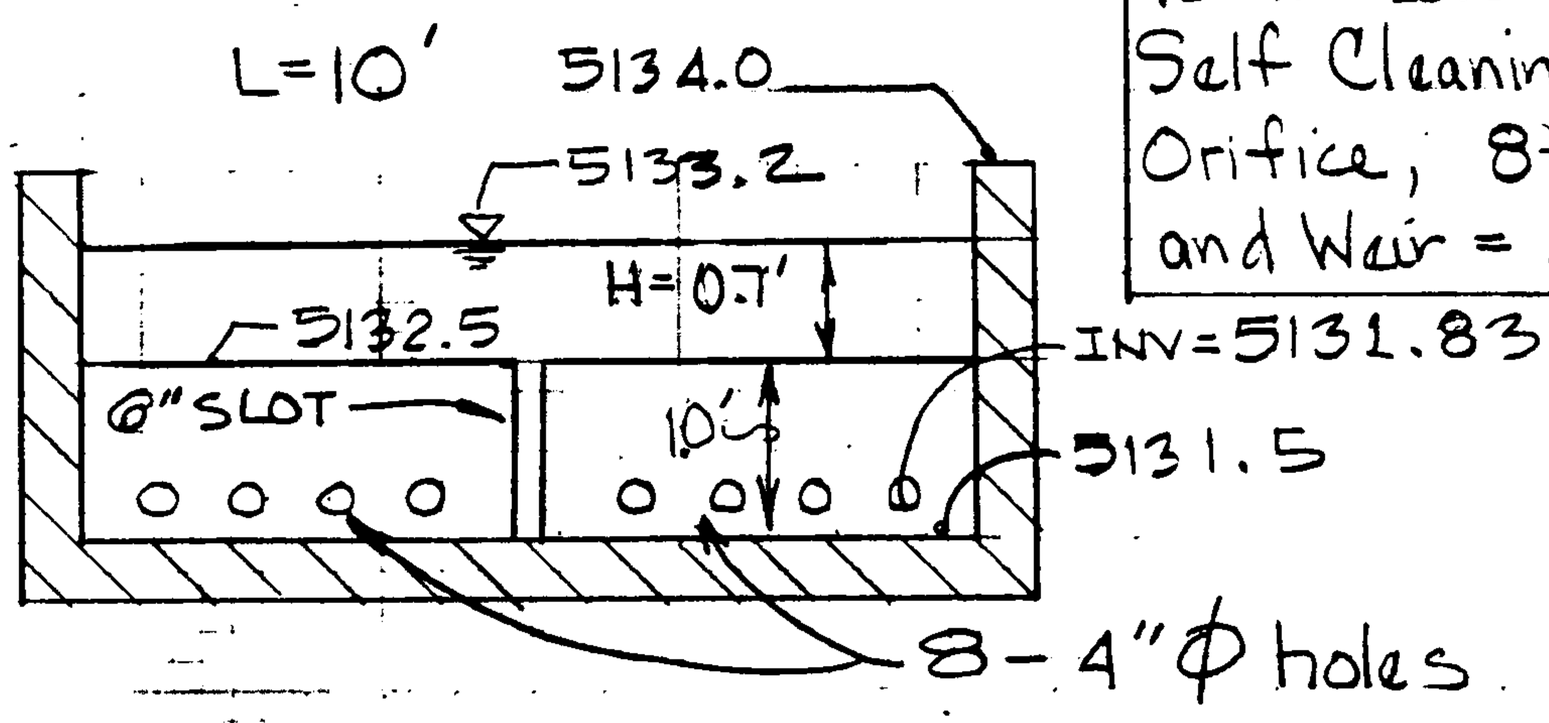

$Q_{WEIR} = 2/3\sqrt{2g}\ L H^{3/2}$

$32.5 = 2/3\sqrt{2 \times 32.2} \times 10' \times H^{3/2}$ $\quad H = 0.72'$

$Q_{ORIFICE} = C_s A \sqrt{2gh}$ $\quad$ 8 holes = 0.6981 ft²

$= 0.6 \times 1.198\sqrt{2 \times g \times 1.7}$ $\quad$ L SLOT = 0.5000 ft²

$= 7.5$ cfs $\quad$ = 1.1981 ft²

PROJECT NAME LADERA WEST SHEET 1 OF 4
PROJECT NO. 2107-50 BY RB DATE REV 2/3/93
SUBJECT CH'D DATE

AVID ENGINEERING, INC

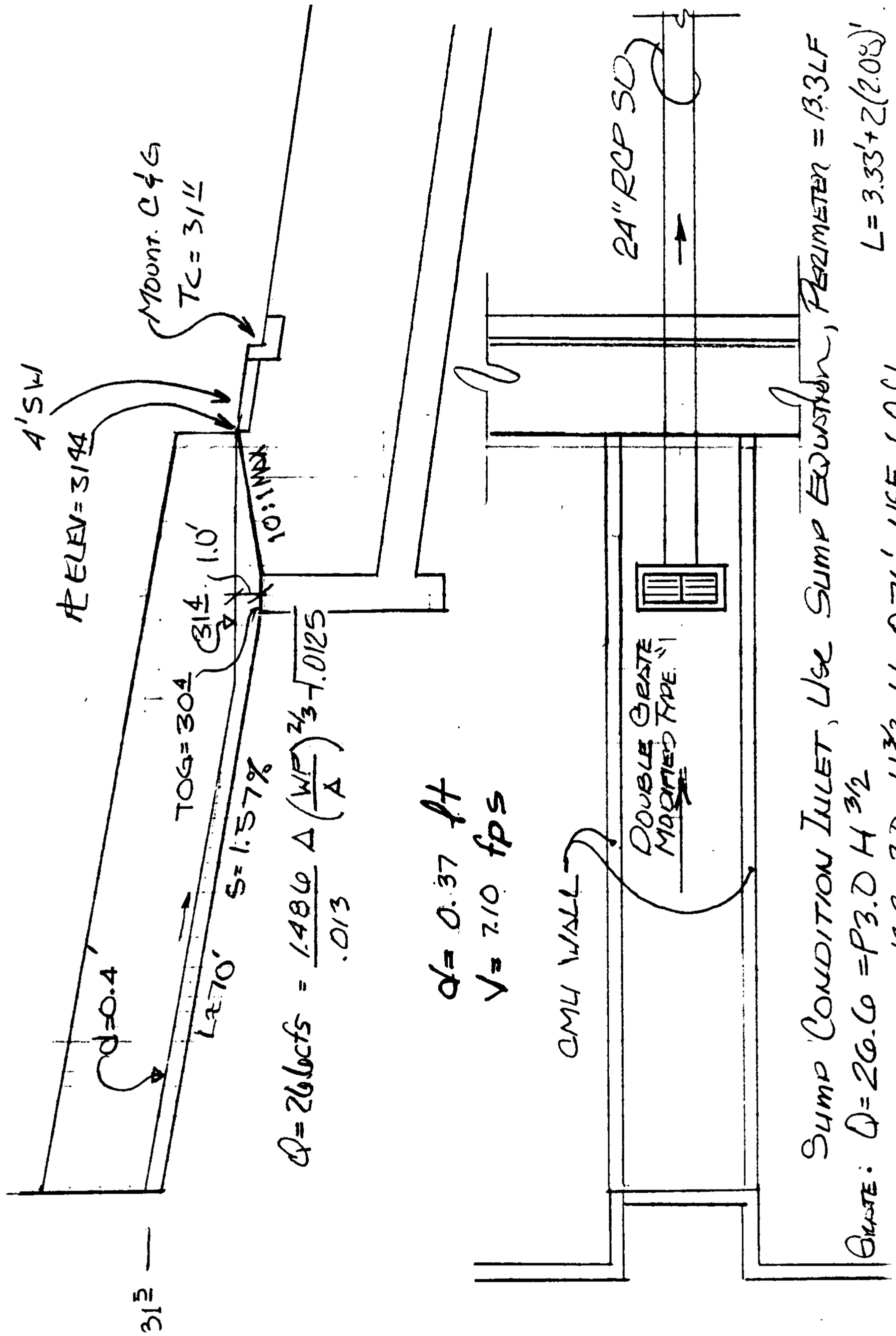

PROJECT NAME _____ SHEET 2 OF 4

PROJECT NO. _____ BY _____ DATE _____

SUBJECT _____ CH'D _____ DATE _____

EQUATION	SGL C	DBL C	TRPL C	QDPL C
1) ORIFICE	$22.0\,h^{0.5}$	$43.9\,h^{0.5}$	$65.9\,h^{0.5}$	$87.8\,h^{0.5}$
2) 3-SIDED WEIR ($h \le 0.83'$)	$19.9\,h^{1.5}$	$29.7\,h^{1.5}$	$39.5\,h^{1.5}$	$49.2\,h^{1.5}$
3) 4-SIDED WEIR ($h > 0.83'$)	ADD TO 2): $11(h-.83)^{1.5}$	ADD TO 2): $22(h-.83)^{1.5}$	ADD TO 2): $33(h-.83)^{1.5}$	ADD TO 2): $44(h-.83)^{1.5}$

1) $Q = 0.6A\sqrt{2gh}$

2) & 3) $Q = 3.3\,P\,h^{1.5}$

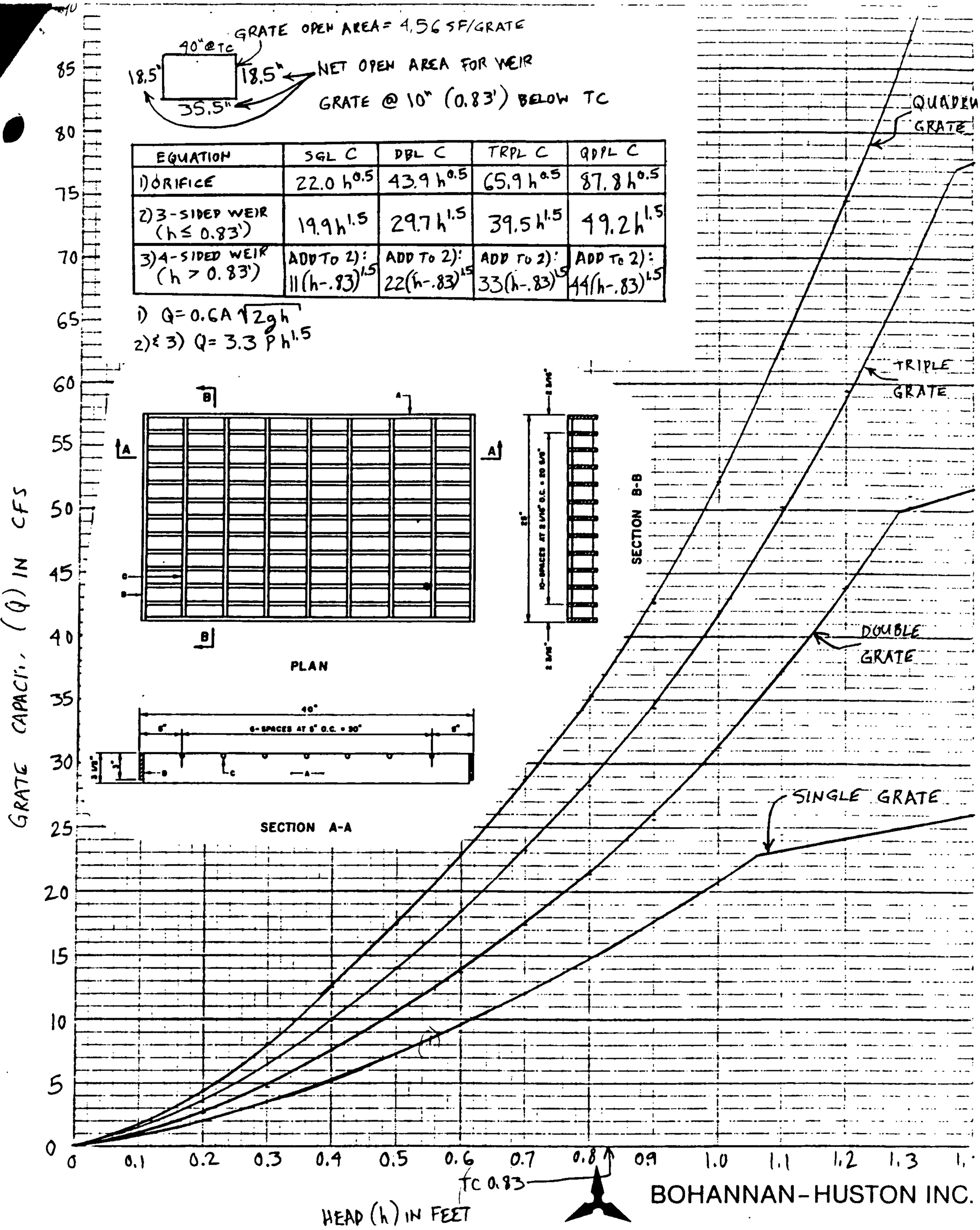

BOHANNAN-HUSTON INC.

PROJECT NAME _____ SHEET 3 OF 4

PROJECT NO. _____ BY RLB DATE _____

SUBJECT RATING CURVE FOR TYPE C INLETS CH'D _____ DATE _____

IN SUMP, NO CLOGGING FACTOR

AVID ENGINEERING, INC.

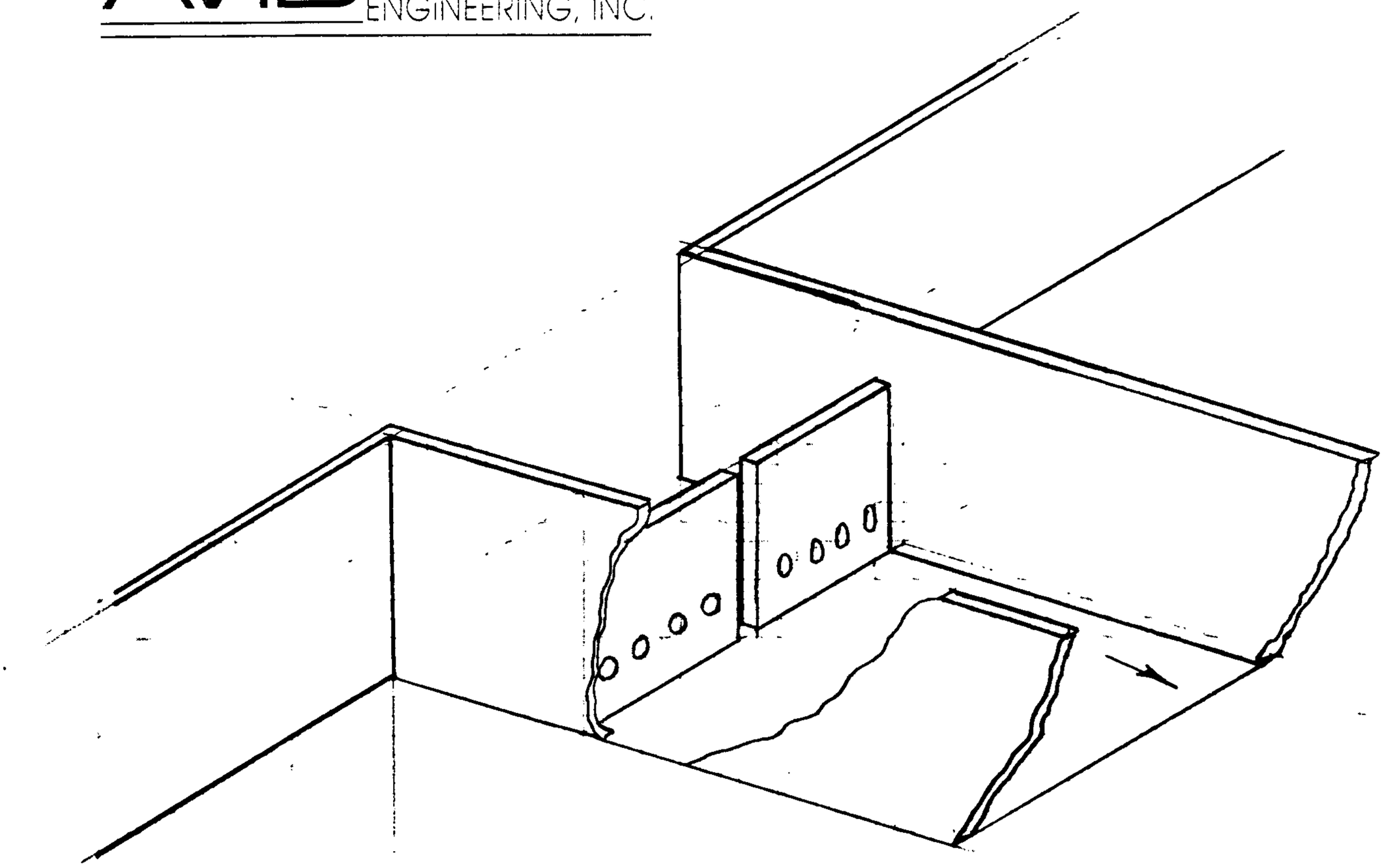

ISOMETRIC OF INLET WEIR

NTS

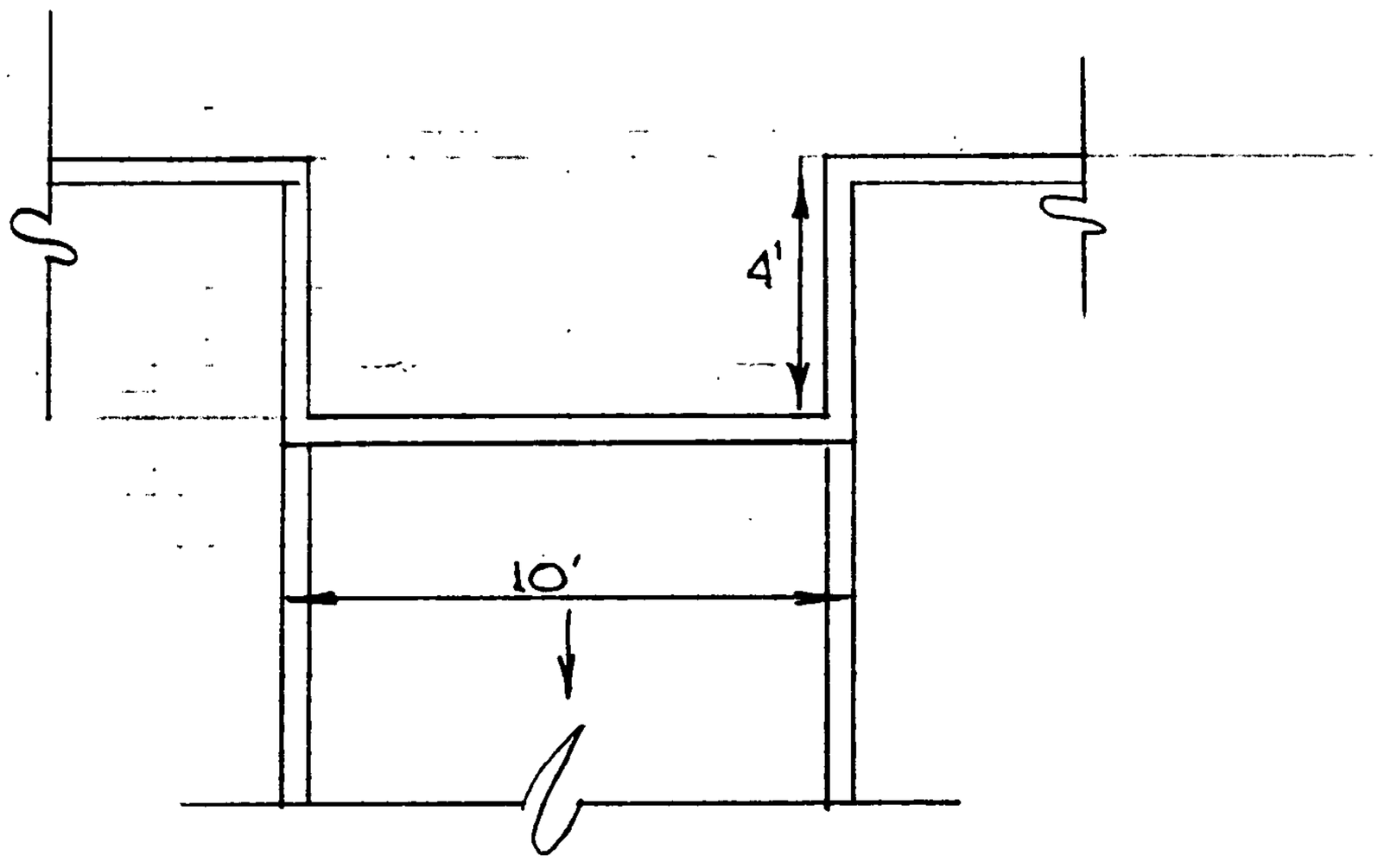

PLAN VIEW

NTS

PROJECT NAME _____ SHEET 4 OF 4

PROJECT NO. _____ BY _____ DATE _____

SUBJECT _____ CH'D _____ DATE _____

AVID ENGINEERING, INC

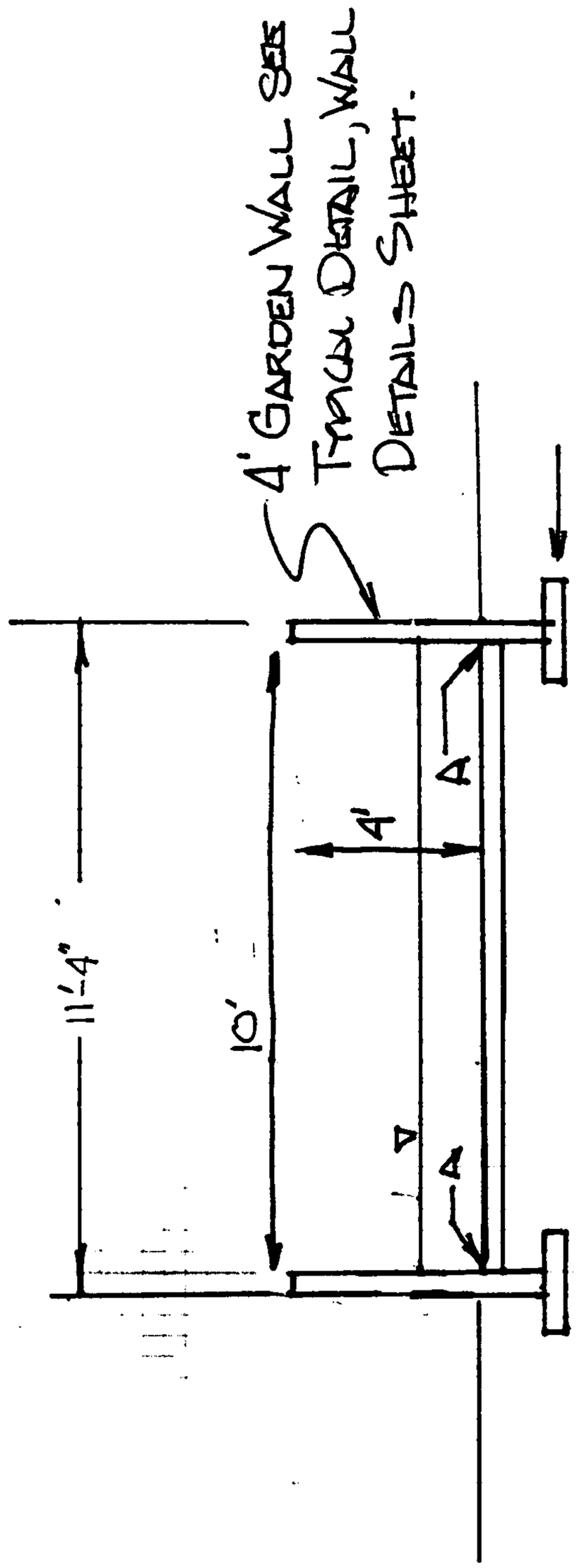

CHANNEL DETAIL

TYPE A, MODIFIED LINING
PER CDA 2200

$Q_{100} = 30 cfs$ $D_n = 0.52'$ $V_n = 6.65 fps$

$Q_{CAPACITY} = 400 cfs$ @ $D = 3.0 ft$

PROJECT NAME _____ SHEET 1 OF 1

PROJECT NO. _____ BY _____ DATE _____

SUBJECT _____ CH'D _____ DATE _____

AVID ENGINEERING, INC

1) $Q_{100} = 26$ cfs
Based on Inlet Control MWSEL = 304
d = 2.4 ft
FF = 1.1 ft.

2) Max. Capacity @ Brink of Berm
$Q_{max} = 37.0$ cfs

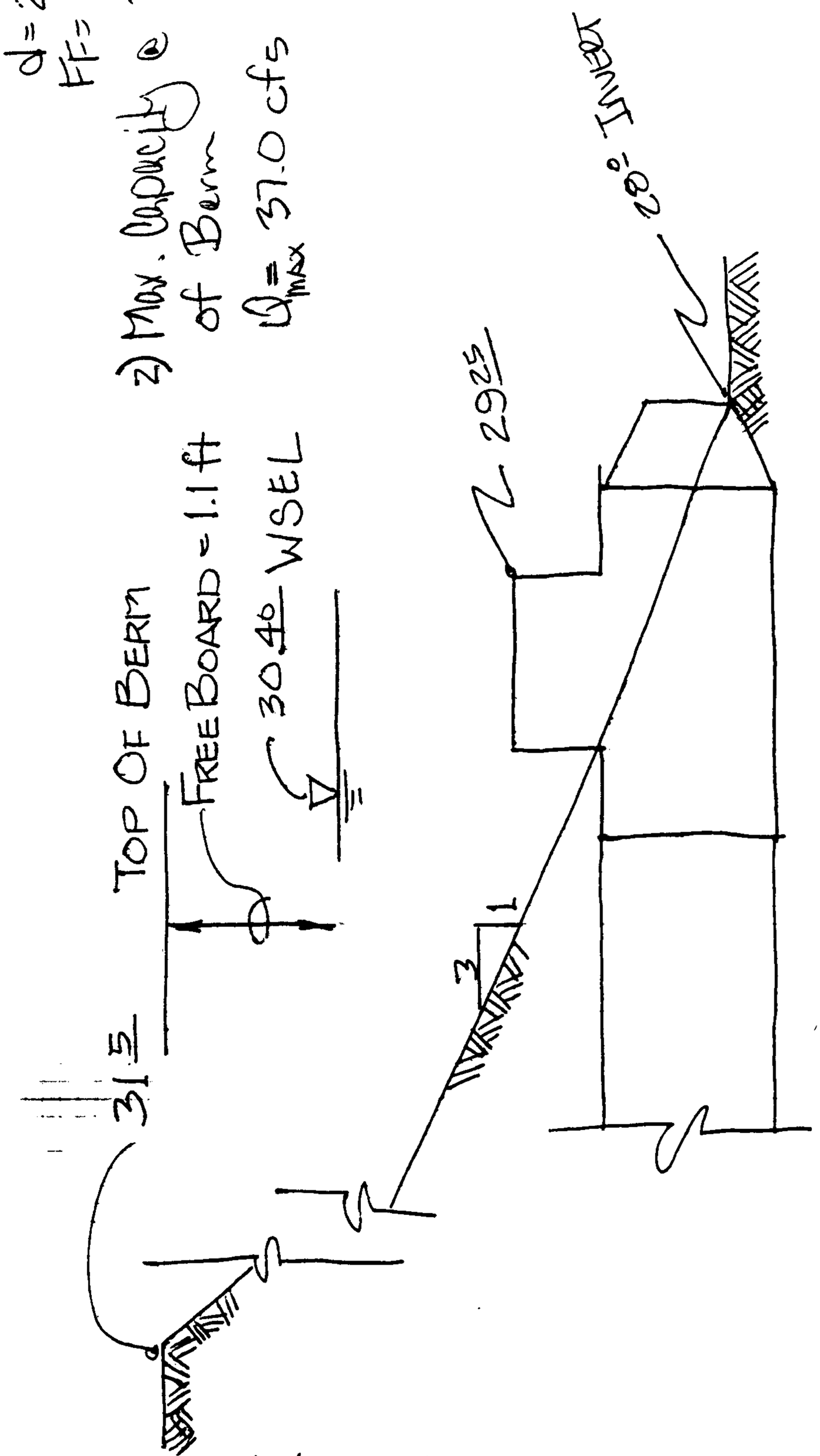

PROJECT NAME LADERA WEST SHEET 1 OF 3
PROJECT NO. 2107.50 BY RLB DATE 1/23/93
SUBJECT Det/Desilt Pond CH'D DATE

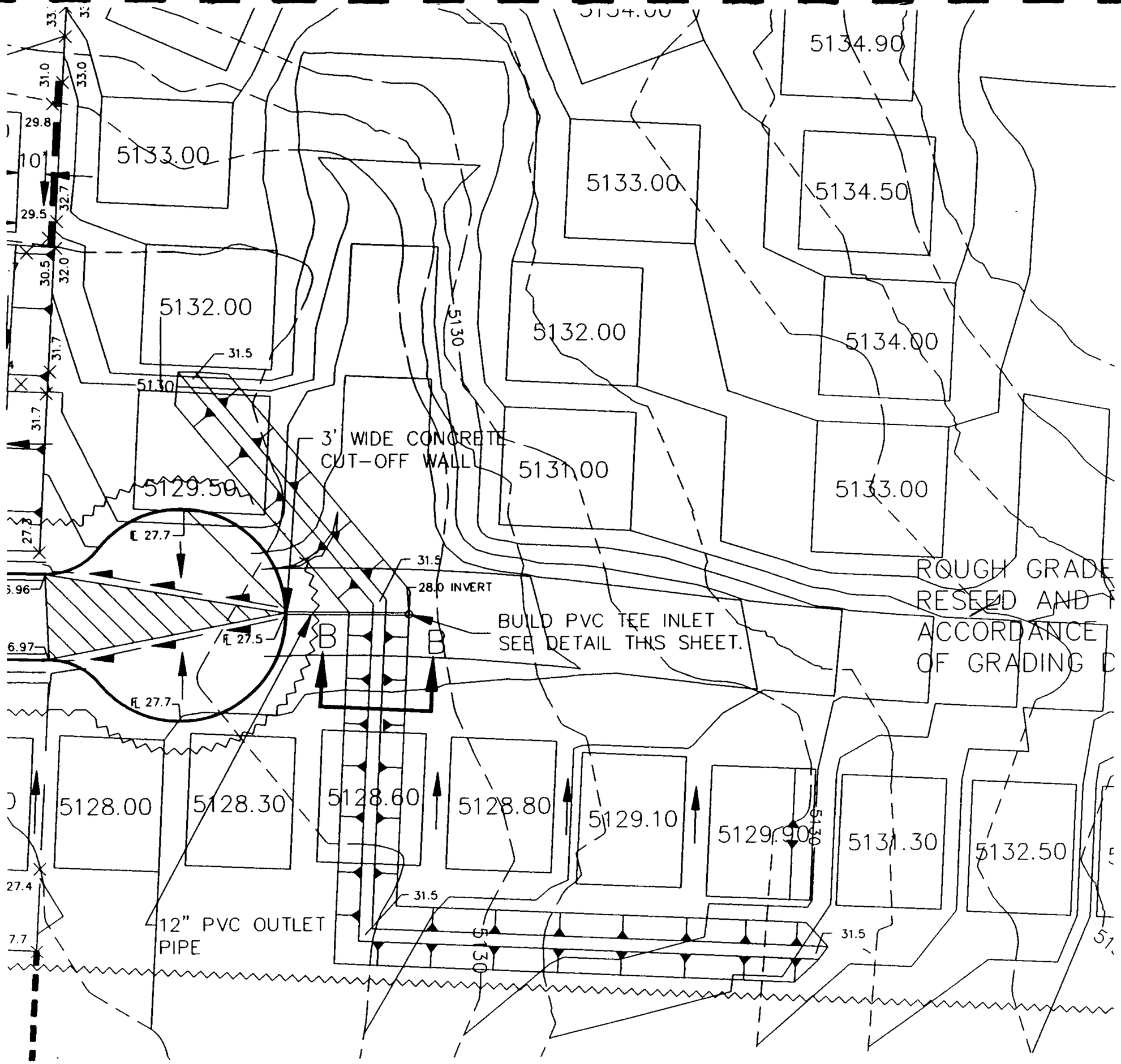
5134.90
5133.00
5133.00
5134.50
5132.00
5132.00
5134.00
5130
31.5
5130
3' WIDE CONCRETE
CUT-OFF WALL
5131.00
5129.50
5133.00
EL 27.7
31.5
28.0 INVERT
BUILD PVC TEE INLET
SEE DETAIL THIS SHEET.
B
B
EL 27.5
EL 27.7
ROUGH GRADE
RESEED AND
ACCORDANCE
OF GRADING
5128.00
5128.30
5128.60
5128.80
5129.10
5129.90
5130
5131.30
5132.50
31.5
31.5
5130
12" PVC OUTLET
PIPE

SHT 2/3

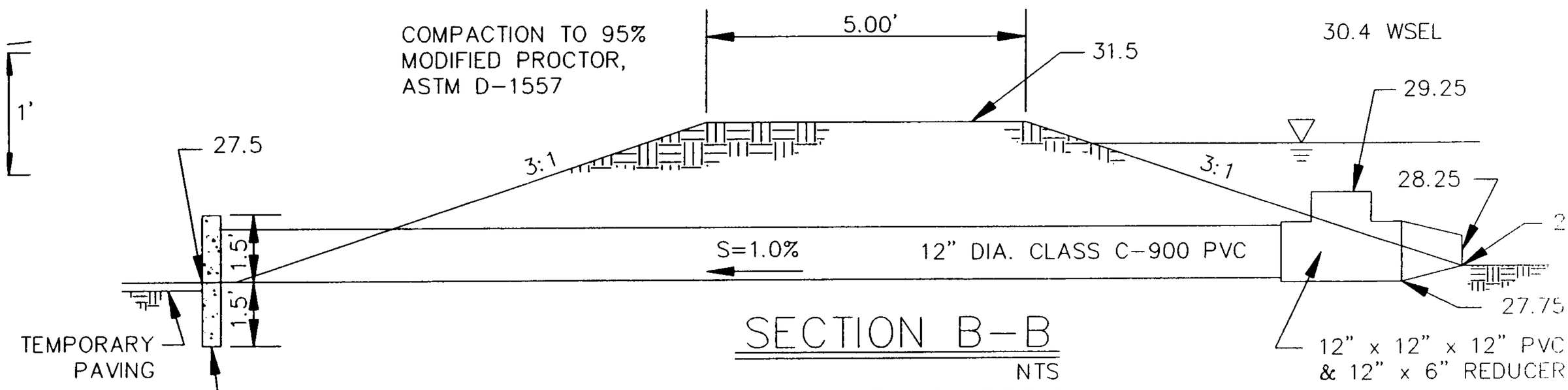

SECTION B-B

NTS

TEMPORARY DIVERSION
DITCH & DIKE

SHT 3/3

Fred

City of Albuquerque

P.O. BOX 1293 ALBUQUERQUE, NEW MEXICO 87103

July 15, 1994

CERTIFICATE OF COMPLETION AND ACCEPTANCE

Bo Johnson
Curb, Inc.
6301 Indian School N.E.
Albuquerque, NM 871104

RE: PROJECT NO. 4450.86, EL RANCHO ATRISCO, PHASE IV , MAP NO. G-10)

Dear Mr. Johnson:

This is to certify that the City of Albuquerque accepts Project No. 4450.86 as being completed according to approved plans and construction specifications. Please be advised this certificate of completion and acceptance shall only become effective upon final plat approval and filing in the office of the Bernalillo County Clerk's Office.

The project is described as follows:

- Installed new water and sanitary sewer lines including services and appurtenances to provide service to developed lots at the subject subdivision.

- Constructed curbs and gutters, wheel chair ramps at curb returns and asphalt pavements as shown on the plans for the subject subdivision.

- Also, built channel rundown and valley gutters to include sidewalk culverts and handrail to San Benito and Todos Santo at the subject subdivision.

RECEIVED
JUL 21 1994
HYDROLOGY DI

The contractor's correction period begins the date of this letter and will be effective for a period of one (1) year.

Sincerely,

Rick Roybal, PE
City Engineer,
Engineering Group
Public Works Department

Sincerely,

Russell B. Givler, PE
Chief Construction Engineer,
Engineering Group
Public Works Department

cc: Community Sciences
New Concepts
Fred Aguirre, Engineering Group, PWD
Lynda Michelle DeVanti, Engineering Group, PWD
Terri Martin, Engineering Group, PWD
Martin Barker, Engineering Group, PWD
Steve Gonzales, Special Assessments, DFM
A.N. Gaume, Operations Group, PWD
Sam Hall, Operations Group, PWD
Jim Fink, Operations Group, PWD
Ray Chavez, Engineering Group, PWD
Stuart Reeder, Water/Wastewater Group, PWD
Dave Parks, Engineering Group, PWD
Dean Wall, Engineering Group, PWD
Josie Gutierrez, New Meter Sales, Finance Group, PWD
Richard Zamora, Engineering Group, PWD
f/Project No. 4450.86
f/Readers
f/Warranty:Contract

CURB, INC.

RECEIVED
OCT 15 1993

6301 INDIAN SCHOOL N.E.
SUITE 680
ALBUQUERQUE, NEW MEXICO 87110

TELEPHONE: 505-881-9190
FAX: 505-888-1831

Mr. Gilbert Aldaz, P.E., L.S.
City County Floodplain Administrator
Hydrology Division
City of Albuquerque
P.O. Box 1293
Albuquerque, New Mexico 87103

RE: Ladera West Unit II

Dear Mr. Aldaz

This is to certify that Curb Inc. will construct the retaining walls shown along the rear property line of lots 33-A and 48-A as shown on the approved construction drawings for the above referenced subdivision.

This construction will be done in 10 working days.

I trust this meets with your approval.

Very truly yours,

CURB INC.

Charles A. Hagelin

CHARLES HAGELIN 10-15-93

srg

City of Albuquerque
P.O. BOX 1293 ALBUQUERQUE, NEW MEXICO 87103

October 15, 1993

Bo Johnson, P.E.
Curb Inc
6301 Indian School Road
Albuquerque, NM 87120

RE: ENGINEER'S CERTIFICATION FOR LADERA WEST UNIT 1 AND UNIT II SUBDIVISION (G10/D8A), ENGINEER'S STAMP DATED SEPTEMBER 28, 1993 AND SEPTEMBER 30, 1993.

Dear Mr. Johnson:

Based on the information provided on the referenced submittals received October 4, 1993, the certification meets the requirements for release of financial guarantees as identified on the infrastructure list.

If you should have any questions, please do not hesitate to contact me at 768-2650.

Cordially,

Gilbert Aldaz, P.E. & P.S.
Civil Engineer/Hydrology

xc: Lynda Michelle DeVanti, DRC
File

wp+3763

11-09-93

To: Steve Crawford
From: Gilbert Aldaz
Re: Drainage Covenant & Easement For Fairway Manor Comments (G-10)

- The Exhibits for Sheets 22 & 23 need to be on legal size for recording purposes

- The easement requires a metes & bounds description

- A maintenance covenant will also be required for the temporary offsite improvements which serve Unit 1 until such time that Unit 2 is developed

PROJECT TITLE: Ladera West Unit II ZONE ATLAS/DRN FILE #: 610 - D8A

DRB #: _____ EPC #: _____ WORK ORDER #: 4450.90

LEGAL DESCRIPTION: El Rancho Atrisco Phase II

CITY ADDRESS: _____

ENGINEERING FIRM: AVIO CONTACT: Mr. Beltrame

ADDRESS: 6100 Seagull ST PHONE: 881 5357

OWNER: Club Inc. CONTACT: Bo Johnson / Mr Charles Klöbelin

DOEONT

ADDRESS: 6301 Indian School PHONE: 899 9656

ARCHITECT: _____ CONTACT: _____

ADDRESS: _____ PHONE: _____

SURVEYOR: Avid / Clausen & Assoc. CONTACT: _____

ADDRESS: _____ PHONE: _____

CONTRACTOR: New Concepts Inc CONTACT: Tom Lakaran

ADDRESS: San Pedro PHONE: 881 9504

TYPE OF SUBMITTAL:

____ DRAINAGE REPORT

____ DRAINAGE PLAN

____ CONCEPTUAL GRADING & DRAINAGE PLAN

____ GRADING PLAN

____ EROSION CONTROL PLAN

X ENGINEER'S CERTIFICATION

____ OTHER

PRE-DESIGN MEETING:

____ YES

____ NO

____ COPY PROVIDED

CHECK TYPE OF APPROVAL SOUGHT:

____ SKETCH PLAT APPROVAL

____ PRELIMINARY PLAT APPROVAL

____ S. DEV. PLAN FOR SUB'D. APPROVAL

____ S. DEV. PLAN FOR BLDG. PERMIT APPROVAL

____ SECTOR PLAN APPROVAL

____ FINAL PLAT APPROVAL

____ FOUNDATION PERMIT APPROVAL

____ BUILDING PERMIT APPROVAL

____ CERTIFICATE OF OCCUPANCY APPROVAL

____ GRADING PERMIT APPROVAL

____ PAVING PERMIT APPROVAL

____ S.A.D. DRAINAGE REPORT

____ DRAINAGE REQUIREMENTS

____ OTHER Final Grading & Drainage Release (SPECIFY)

RECEIVED OCT - 4 1990

DATE SUBMITTED: 9/2

BY: [signature]

A10

TRINITY ENTERPRISES, INC.

Civil Engineering, Home Building, Construction Management

Bo Johnson
President

September 30, 1993

Mr. Gilbert Aldaz, P.E. L.S.
City, County Flood Plain Administer
City of Albuquerque
P.O.Box 1293
Albuquerque,
New Mexico 87103

Re: Ladera West Unit 1 wo. 4450.90 G-10 2

Dear Mr. Aldaz,

Please find enclosed two sets of blueprints for the Drainage and Grading Certification for the above referenced subdivision.

I hope this meets with your approval. Thank you.

Sincerely,

Bo Johnson P.E.

RECEIVED
OCT - 4

8999656

5905 Azuelo Ct. N.W. • Albuquerque, New Mexico 87120 • (505) ~~898-7266~~

A10

TRINITY ENTERPRISES, INC.

Civil Engineering, Home Building, Construction Management

Bo Johnson
President

September 28, 1993

Mr. Gilbert Aldaz P.E. L.S.,
City, County Flood Plain Administer
City of Albuquerque,
P.O. 1293
Albuquerque,
New Mexico 87103

Re: Ladera West Unit 2 (WO4450.90)

Dear Mr. Aldaz,

Please find enclosed two blue prints of the drainage a grading plan for the above referenced subdivision showing my Drainage & Grading Certification as required prior to final acceptance of the public improvements by the City.

I am also cleaning the storm drain system as required. Please note that the City Surveyor performed all staking for this project

I anticipate that this meets with your approval. Thank you for your early attention to this matter.

Sincerely,

Bo Johnson, P.E.

RECEIVED
OCT - 4 1993

8999656

5905 Azuelo Ct. N.W. • Albuquerque, New Mexico 87120 • (505) ~~898-7266~~

CURB, INC.

6301 INDIAN SCHOOL N.E.
SUITE 680
ALBUQUERQUE, NEW MEXICO 87110

TELEPHONE: 505-881-9190
FAX: 505-888-1831

July 2, 1993

Mr. Gilbert Aldaz, P.E.
City of Albuquerque
Post Office Box 1293
Albuquerque, New Mexico 87103

RE: LADERA WEST - UNIT I

Dear Mr. Aldaz:

This letter is to certify that Curb, Inc. will clean the streets and storm drain system on the above referenced subdivision from this date through the month of September 1993 or to the date that the grading certificate is accepted, whichever is earlier. Curb, Inc. will be financially liable for any occurrence to this date due to the storm drainage.

Also, any additional certification required on this subdivision will be done no later than with the certification request for Ladera Unit II.

Very truly yours,

CURB, INC.

Charles A Haegelin

CHARLES A. HAEGELIN, PRESIDENT

/cah

cc: Bo Johnson
Trails Management, Inc.

A:5531.055

City of Albuquerque
P.O. BOX 1293 ALBUQUERQUE, NEW MEXICO 87103

June 28, 1993

Rick Beltramo, P.E.
AVID Engineering
6100 Seagull NE Suite 102
Albuquerque, NM 87109

RE: AMENDED DRAINAGE REPORT FOR LADERA WEST UNIT II SUBDIVISION, (G10/D8A), ENGINEER'S STAMP DATED JUNE 4, 1993, RECEIVED JUNE 7, 1993 FOR CHANGE ORDER APPROVAL

Dear Mr. Beltramo:

Based on the information provided on the referenced submittal the change order revision for the floodwall is acceptable based on your analysis.

Please be advised that prior to release of Financial Guarantees for this subdivision by DRC, an Engineer's Certification must be submitted and approved by this office.

If you should have any questions, please do not hesitate to contact me.

Cordially,

Gilbert Aldaz, P.E. & P.S.
Civil Engineer/Hydrology

xc: Lynda Michelle DeVanti, DRC
File

wp+3763

DRAINAGE INFORMATION SHEET

PROJECT TITLE: LADERA WEST ZONE ATLAS/DRAINAGE FILE # G-10/D8A

LEGAL DESCRIPTION: EL RANCHO ATRISCO DE LOS SANTOS

CITY ADDRESS: TODOS SANTOS STREET, NORTH OF OURAY

ENGINEERING FIRM: AVID ENGINEERING CONTACT: RICK BELTRAMO

ADDRESS: 6100 SEAGULL NE #102 PHONE: 881-5357

OWNER: CURB, INC CONTACT: CHUCK HAEGELIN

ADDRESS: 9806 GREENBRIAR NE PHONE: 821-8718

ARCHITECT: NONE CONTACT:

ADDRESS: PHONE:

SURVEYOR: AVID ENGINEERING CONTACT: RUAN BACIGALUPA

ADDRESS: 6100 SEAGULL NE PHONE: 881-5357

CONTRACTOR: CONTACT:

ADDRESS: PHONE:

PRE-DESIGN MEETING:

X YES

___ NO

___ COPY OF CONFERENCE RECAP SHEET PROVIDED

RECEIVED JUN 7 1993 HYDROLOGY DIV.

DRB NO. DRB-92-0210

EPC NO. Z-92-42

PROJECT NO. 4450.90

TYPE OF SUBMITTAL:

___ DRAINAGE REPORT

___ DRAINAGE PLAN

___ CONCEPTUAL GRADING & DRAIN PLAN

___ GRADING PLAN

___ EROSION CONTROL PLAN

___ ENGINEER'S CERTIFICATION

X DEN. Rpt. Addendum

CHECK TYPE OF APPROVAL SOUGHT:

___ SECTOR PLAN APPROVAL

___ SKETCH PLAT APPROVAL

___ PRELIMINARY PLAT APPROVAL

___ SITE DEVELOPMENT PLAN APPROVAL

___ FINAL PLAT APPROVAL

___ BUILDING PERMIT APPROVAL

___ FOUNDATION PERMIT APPROVAL

___ CERTIFICATE OF OCCUPANCY APPROVAL

___ ROUGH GRADING PERMIT APPROVAL

___ GRADING/PAVING PERMIT APPROVAL

X OTHER Change Order (SPECIFY).

DATE SUBMITTED: 6/4/93

BY: RICK BELTRAMO

REV. 10/85

AVID ENGINEERING, INC.

Civil • Structural • Transportation

June 4, 1993

Gilbert Aldaz, P.E.&P.S.
City Hydrologist
City of Albuquerque
Public Works Department
Albuquerque, NM 87103

Re: LADERA WEST DRAINAGE REPORT AMENDMENT (G10/D8A)

Dear Gilbert:

Pursuant to our meeting on Tuesday, May 27, I am submitting this amendment to the drainage report. The amendment revises the floodwall design and adds a CMU diversion wall as we discussed. Included with this letter are the engineering computations and analysis which support the design changes.

Amendments consist of three subjects; 1) removal of the east floodwall along the existing subdivision, 2) changing portions of the proposed west floodwall to a CMU diversion wall and 3) evaluating the sediment storage capacity and design of the inlet weir.

EAST FLOODWALL

Site inspection revealed that there exists a substantial elevation difference between the invert of the PNM easement (Tract 'C') and the base of the existing subdivision fence. By this observation it was questioned whether the proposed 2' flood wall was necessary. The original plan topography does not show a well defined channel as can be seen in the field.. For this reason, a field survey has been provided showing the actual topography (survey included with this letter). Survey grades show that Tract 'C' is graded as a trapezoidal channel with a 100 ft bottom width, approximately 4' depth and a longitudinal grade of approximately 0.6%. A cross-section is provided along the projection of lots 139/140. This cross-section clearly shows the trapezoidal shape of Tract 'C'.

The original design requirement for the floodwall was based on the event that if the storm drain were to fail and 100% of the runoff passed through the emergency channel located on lot 139, and that the outfall from the emergency channel would be directed at the existing subdivision 200 ft away. This situation may have the potential to damage the existing subdivision. The original grades did not adequately show that this flow would be redirected, and therefore, a conservative measure to install the floodwall was required.

RECEIVED
JUN 7 1993

6100 Seagull St. NE • Suite 102 • Albuquerque, New Mexico 87109 • (505) 881-5357

The analysis provided shows that the flow cannot reach the existing subdivision, therefore, the floodwall is not required. Three analysis methods were looked at to reach this conclusion.

1) Based on total energy flow from the channel does not have sufficient energy to flow across Tract 'C' and up the 3.7' vertical rise. This conclusion does not take into account that the flow exiting the emergency channel would spread out, lose velocity and would be turned to a southerly direction due to the grades of the Tract 'C' channel. This too is a conservative approach.

2) Capacity of the channel has been analyzed to see if flow in the channel reaches depths which could cause damage to the existing subdivision. The manning's depth normal flow computations show that the channel has capacity for approximately 350 cfs, much greater than the approximately 60 cfs required. The Tract 'C' channel and the Quickflow channel weir and drop structure were originally designed to carry much greater flows. The 60" storm drain in Ouray intercepts and diverts most of this runoff downstream of the area of concern leaving additional capacity in the channel.

3) The outfall weir has also been analyzed and it too shows that it has much more capacity than the design flow.

In summary, it is conservative to say there is no need for the 2' floodwall.

CMU DIVERSION WALL

Originally the west floodwall was design to divert off-site flows to the low point at the inlet structure. The floodwall design was based on depths at the inlet. However, these depths only occur at the inlet. The vast majority of the west wall is subject to flow rates less than 17 cfs flowing at depths less than 0.5 ft and velocities less than 4 fps, under the 100-yr/6-hr design storm. Therefore, these portions of the wall are over designed.

Analysis is provided for what is called the CMU diversion wall. The design is based on standing water depths no greater than 1.0' or flow depths of no greater than 0.5'. Areas exceeding this criteria are protected by the existing 2' floodwall design.

A scour analysis was performed on the diversion wall using local scour analysis. This analysis is conservative in that the local scour method assumes sudden changes in flow velocity and direction, such as at piers, etc. The diversion wall is more of a steady state flow regime with little change in direction or velocity. The analysis is also conservative in that little or no area of the wall is subject to the full design storm.

INLET STRUCTURE SEDIMENT ANALYSIS

Analysis is provided to determine the effects of sediment on the proposed inlet weir structure. The original design did not specifically estimate sediment amounts, nor was it intended to store or retain any specified amount of sediment. It was simply designed to capture some sediment in order to reduce maintenance efforts and to pass the 100-yr design storm including sediment based on a 25% bulking factor.

Analysis was performed based on the Modified Uniform Soil Loss Equation (MUSLE) as shown in the 'SEDIMENT AND EROSION DESIGN GUIDE, DRAFT', March 1992. Results of the analysis show that the weir can hold the equivalent of 1 100-year storm event sediment and still pass 125% of the design flow through the weir. Based on this analysis, the design is adequate and no adjustments are necessary.

Submitted for your review and approval are the engineering design and analysis computations and the original Unit 1 plans for change order approval and one set of blueline prints. All infrastructure for Unit I has been constructed and only the floodwall and the CMU diversion wall are left. The contractor is ready to start on these walls as soon as we have your approval. I will call you Monday regarding this submittal. Thank you for your assistance on this issue. Your time and effort is greatly appreciated.

Sincerely,

Rick Beltramo, P.E.
Project Manager

RB/cs
Enclosures
Job No.s 3111 & 2107

FILE:PROJECTS\LADERA\GILBERT.LTR

AVID ENGINEERING, INC.

ANALYZE TRACT 'C' CHANNEL AND WEIR

Compute Total Energy @ Channel outlet

$E = Y + V^2/2g =$

$= 0.83 + 0.68 = 1.51$

$Q_{100} = 55$ cfs

$V = 6.64$ fps

$Y = 0.83$

Total Energy @ Toe of Slope

$E = Y + V^2/2g$

$= 0.62 + \frac{8.84^2}{2 \times 32.2 \text{ ft/sec}^2}$

$= 1.83$

$Q_{100} = 55$ cfs

$Y_n = 0.62'$

$V = 8.84$ fps

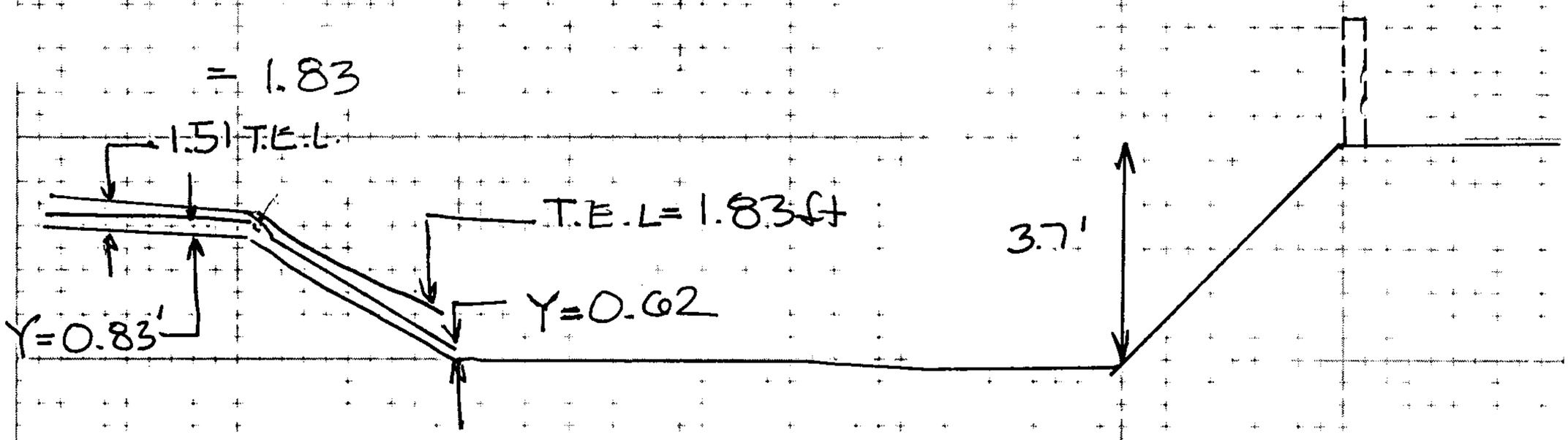

Total Energy = 1.83 << 3.7'

There is insufficient energy available for the 100YR to be physically able to rise above the minimum grade change of 3.7'. Therefor, assuming no other influences such as downstream capacity the flow cannot damage ex. properties.

PROJECT NAME _____ SHEET 1 OF 3

PROJECT NO. LADERA WEST BY _____ DATE 6/2/93

SUBJECT _____ CH'D _____ DATE _____

AVID ENGINEERING, INC.

COMPUTE CHANNEL CAPACITY

Channel Capacity based on Mannings Normal Depth analysis.

S = 0.003 ft/ft
B = 100
SS = 13:1
n = 0.030
Q = 55 cfs + 3 cfs (see Dev. Rpt.) = 58 cfs
d = 0.39 ft << ~4.0 ft available
Qcapacity = 2945 cfs >>> 58 cfs [ok]

COMPUTE WEIR CAPACITY

REFER TO Dev Rpt, copy of analysis attached.

Weir capacity is 1100 cfs >> design flow.

Conclusion

Due to the majority of offsite flows being diverted downstream of the Tract 'C' channel and weir via the 60" Ovray Storm Drain, the emergency overflow channel and Tract 'C' channel and Quickflow channel weir have adequate capacity. Additional floodwalls are not required.

PROJECT NAME _____ SHEET 2 OF 2
PROJECT NO. _____ BY _____ DATE 6/2/93
SUBJECT _____ CHD _____ DATE _____

AVID ENGINEERING, INC.

③ Check capacity of spillways in channel

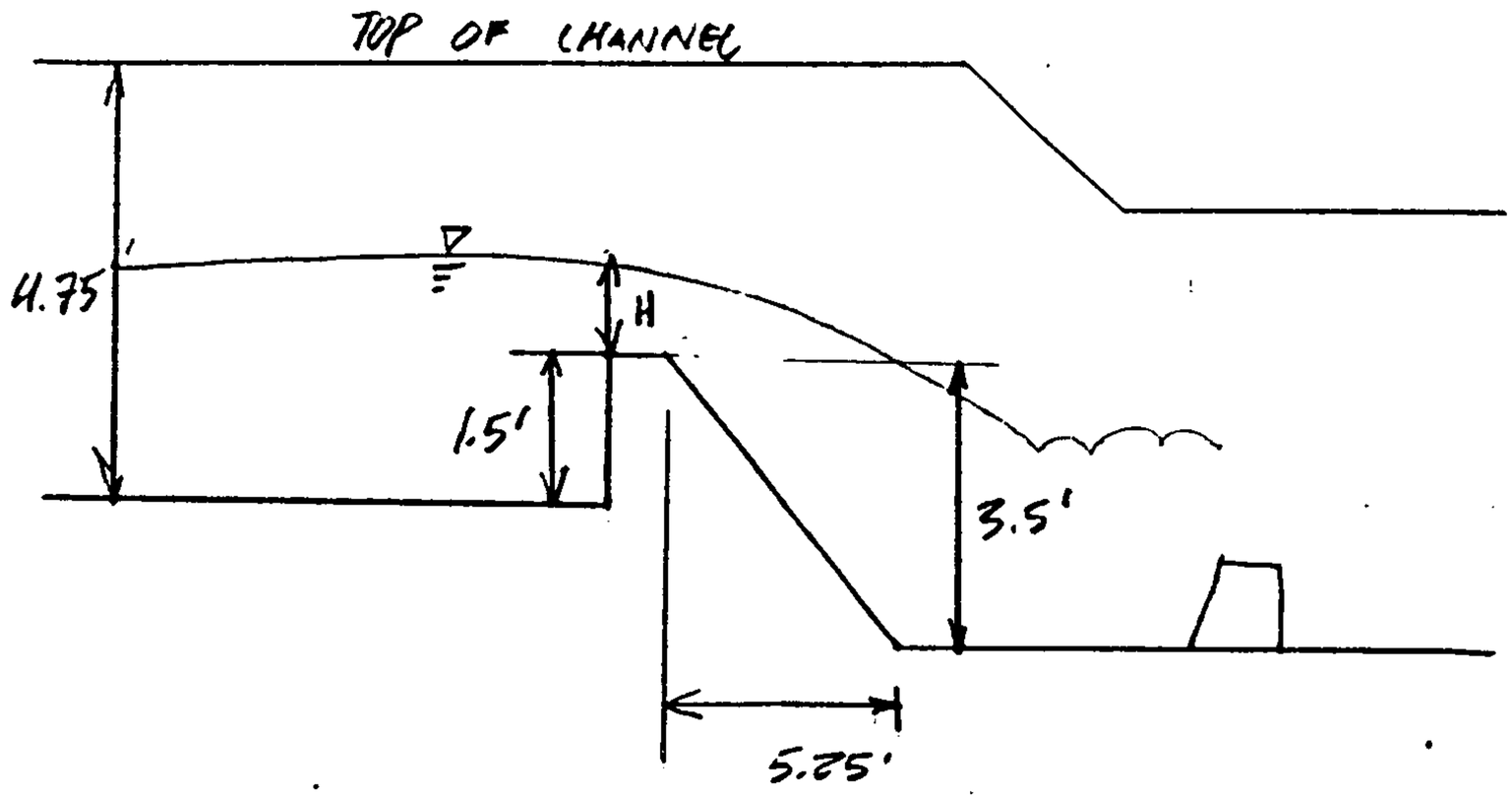

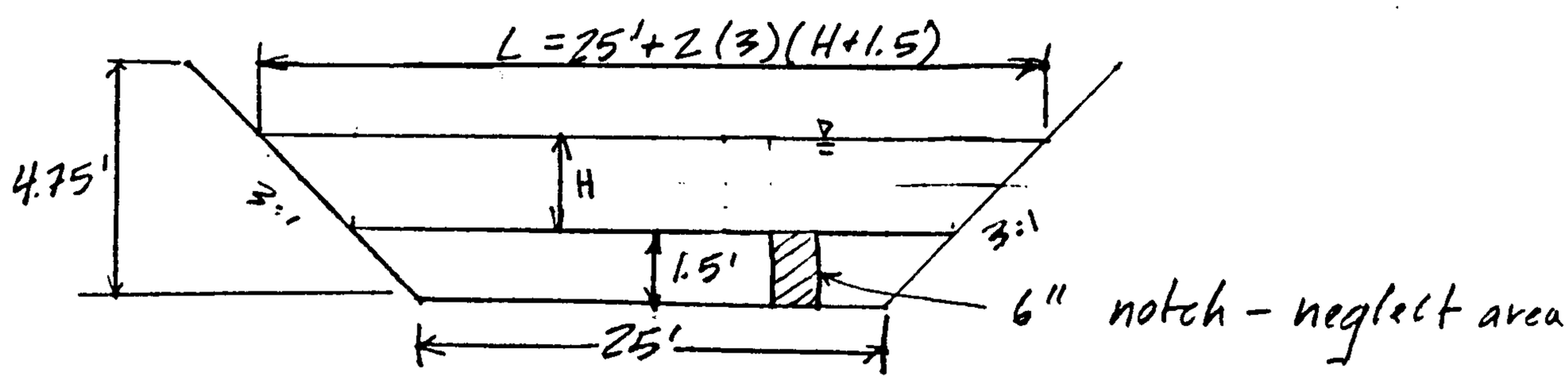

For a trapezoidal weir with 1 inclined face, $Q = CLH^{3/2}$

From King, "Handbook of Hydraulics", 1939, $C \simeq 3.51$ (p.167)

Assume $H = 4.75' - 1.5' = 3.25'$

$L = 25' + 6(3.25' + 1.5') = 53.5'$

$Q = 3.51(53.5')(3.25')^{3/2} = 1{,}100.2$ cfs

PROJECT NAME LADERA WEST SHEET ____ OF ____

PROJECT NO. ____ BY JB DATE 7-92

SUBJECT ____ CH'D JD DATE 3/92

LADERA WEST

2107.00 3111.00

NORTH

SCALE: 1" = 20'

AS-BUILT FIELD SURVEY BY CLAUSEN AND ASSOC.

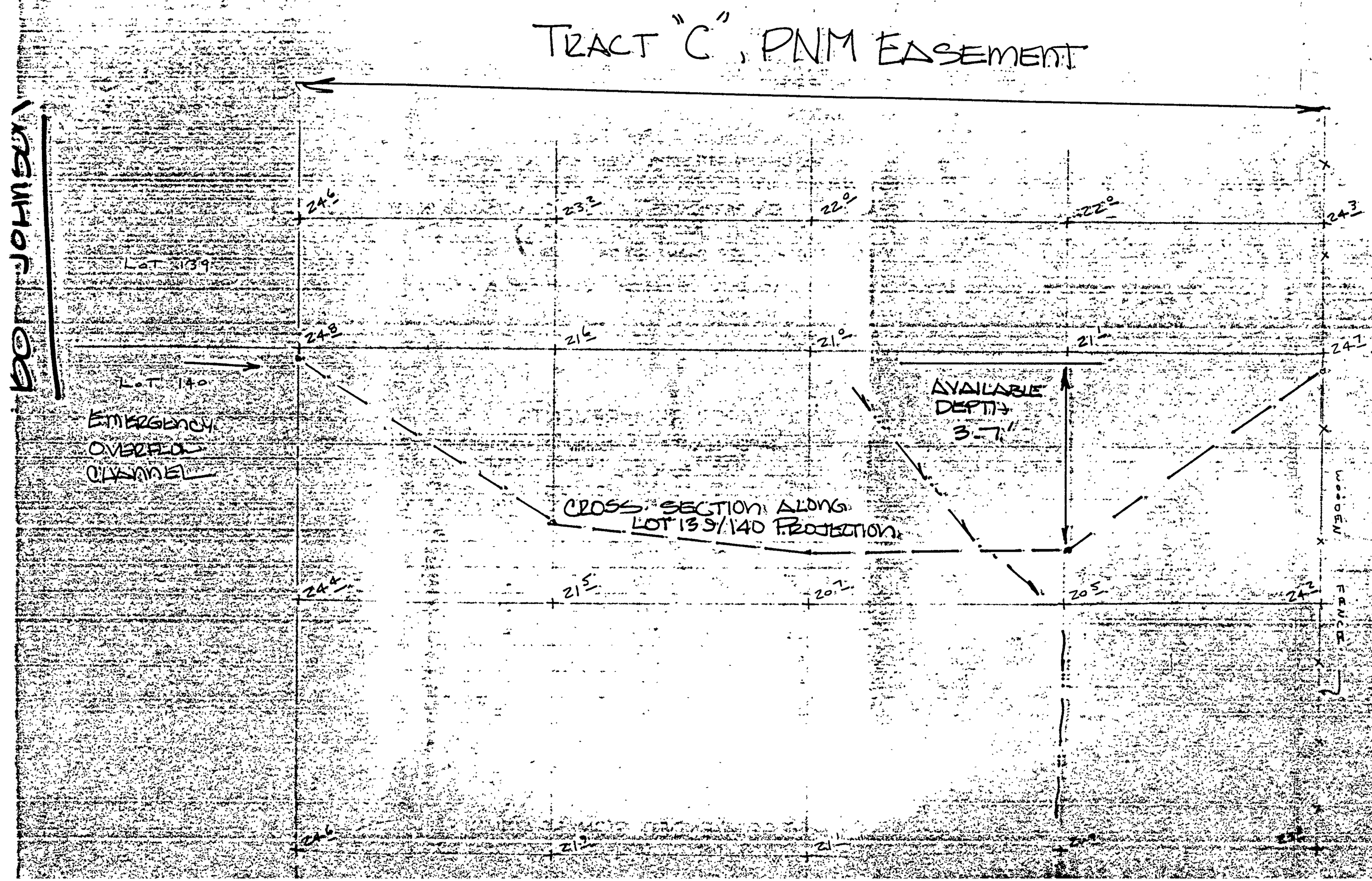

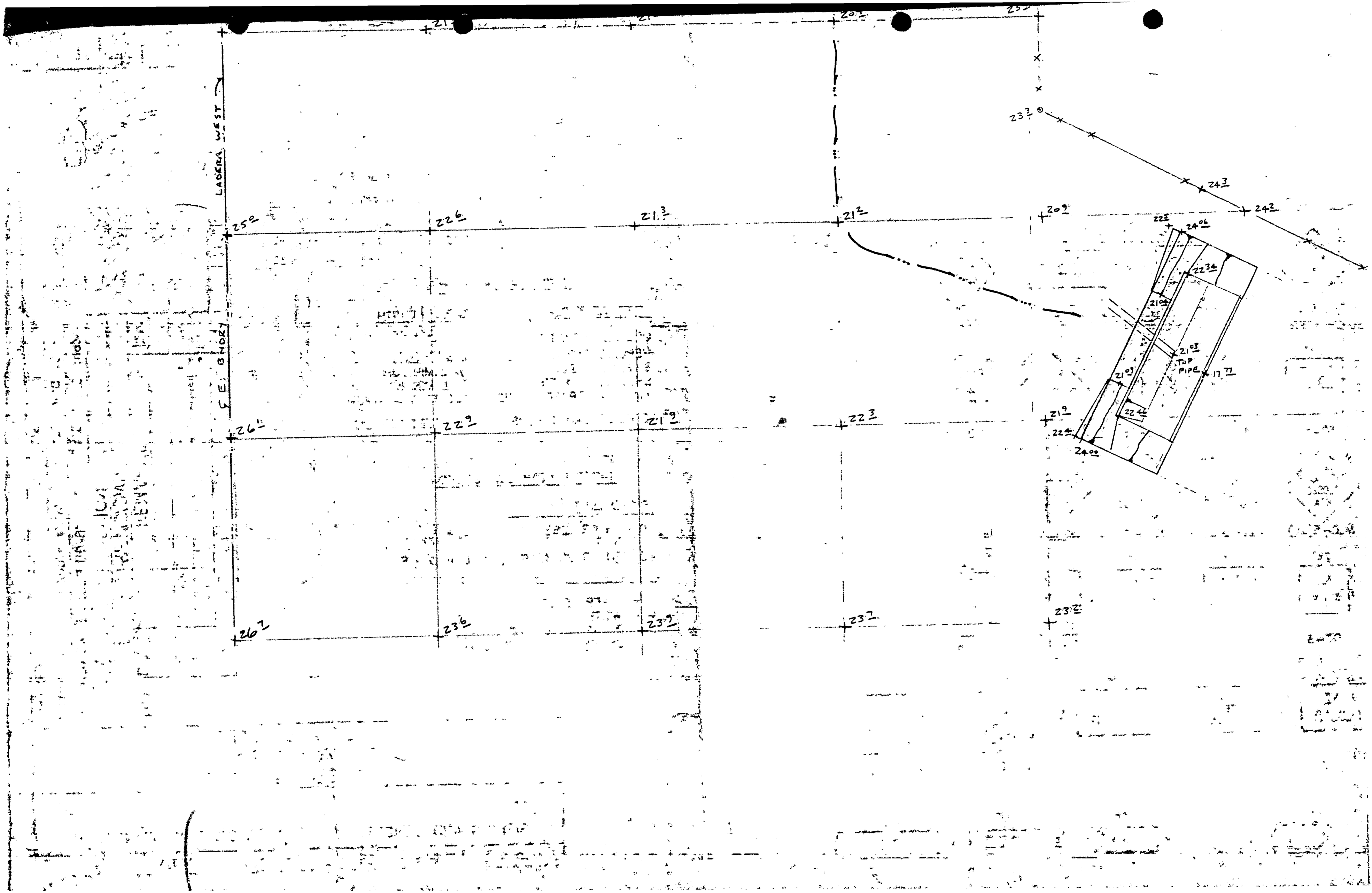
LADERA WEST
S.E. BNDRY
25.0
22.6
21.3
21.2
20.9
23.3
24.3
24.2
22.3
24.06
22.34
21.94
21.03
TOP PIPE
17.77
21.03
22.4
24.00
21.9
22.4
26.1
22.9
21.9
22.3
26.2
23.6
23.9
23.2
23.2

AVID ENGINEERING, INC.

SCOUR ANALYSIS

Analysis of the west wall along Phases 1 and 2, of Ladera West Subdivision is based on local scour analysis methods developed for piers and similar obstructions to flow. This method is considered to be conservative because the method analyzes for sudden dostrictions in flow causing rapid changes in flow direction and velocity. The structure analyzed is a continuous CMU wall ~~with no rapid~~ causing no rapid changes in flow direction or velocity. Therefore the local scour analyse should give greater scour depths than actual.

Normal depth flow analysis is based on mannings equation for a triangular section.

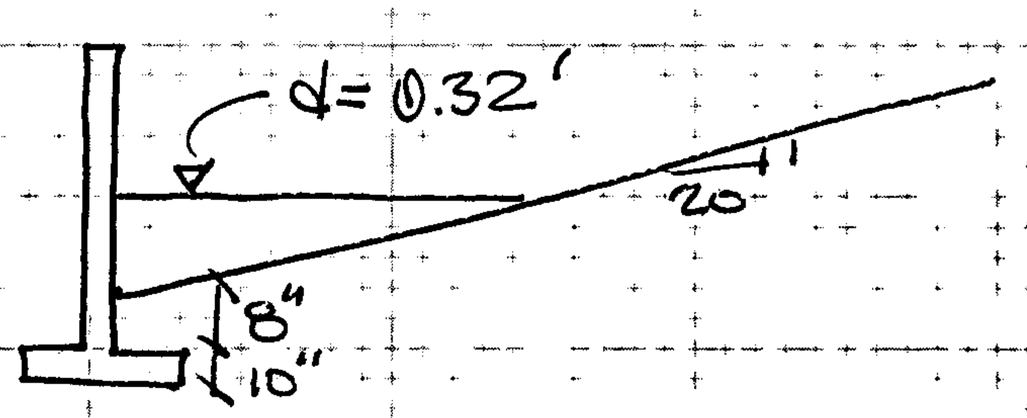

$Q_{100} = 2/3 \cdot 26$ cfs $= 17.3$ cfs (Maximum flow rate along wall)

$n = .030$

Crossslope $= 1/20$

$S = .04$ '/ft

$\Rightarrow d = 0.32$ ft $\quad V = 2.9$ fps

PROJECT NAME Ladera West SHEET 1 OF 2

PROJECT NO. 2107 BY [illegible] DATE 6/1/93

SUBJECT Scour Analysis CH'D _____ DATE _____

AVID ENGINEERING, INC.

SCOUR ANALYSIS ALONG WEST BOUNDARY WALL

From DRAFT "EROSION AND SEDIMENT DESIGN GUIDE", March, 1992.

LOCAL SCOUR ANALYSIS, PG 3-64

(EQU. 3.45) $\frac{Y_s}{Y_1} = 2.0\, K_1 K_2 \left(\frac{a}{Y_1}\right)^{0.65} Fr_1^{0.43}$

Y_s = equilibrium scour depth

Y_1 = flow depth upstream of structure = 0.32' (normal depth)

K_1 = correction for structure shape, Table 3.7 = 0.9

K_2 = correction for angle of attack, Table 3.8 = 1.0

- [redacted], $\theta = 0°$, parallel to wall.

a = width of structure, width of wall is 8" = .67'

Fr_1 = Froude # = $V_1 / (gY_1)^{1/2}$

V_1 = 2.89 fps
g = 32.2 fps/s
Y_1 = 0.32 ft
= .90'

$Y_s = Y_1\, 2.0\, K_1 K_2 \left(\frac{a}{Y_1}\right)^{.65} Fr_1^{0.43}$

$= .32 \times 2.0 \times 0.9 \times 1.0 \left(\frac{.67}{0.32}\right)^{.65} (.90)^{.43}$

$= 0.89$ ft

PROJECT NAME _____ SHEET 2 OF 2

PROJECT NO. _____ BY _____ DATE _____

SUBJECT Scour Analysis CH'D _____ DATE _____

AVID ENGINEERING, INC.

INLET STRUCTURE SEDIMENT ANALYSIS

COMPUTE TOTAL SEDIMENT GENERATED BY 100 YR STORM EVENT

BY MODIFIED UNIVERSAL SOIL LOSS EQUATION (MUSLE)

Where $Y_s = R_w K\ LS\ C\ P$

Where $R_w = 95(V_{100}\, q_{p100})^{.56}$

$= 95(3.87 \cdot 26.6)^{.56}$

$= \underline{1273}$

$V = \frac{2.3\,in}{12} \times 505\,acre \times .4$

$= 3.87\,AC\text{-}FT$

$q_p = 26.6\,CFS$

$\underline{K = 0.30}$ (FIG. B-1)

$LS = \left(\frac{\lambda}{72.6}\right)^N (.065 + .0454\,S + .0065\,S^2)$

$= \left(\frac{1000}{72.6}\right)^{0.5} (.065 + .0454(5) + .0065(5)^2)$

$\Rightarrow 3.711$ $\Rightarrow .4545$

$= 3.711 \times .4545 = \underline{1.68}$

$C = C_I C_{II} C_{III} = 0.7 \times 0.6 \times 0.25 = 0.105$ (TABLES B4, B5 & B6)

$P = 1.0$

$Y_s = 1273 \times 0.30 \times 1.68 \times 0.105 \times 1.0 = 67.36\,TONS$

$Y_s = 67\,\cancel{Tons} \times \frac{2000\,\cancel{lbs}}{\cancel{Ton}} \times \frac{\cancel{ft^3}}{130\,\cancel{lbs}} \times \frac{1\,ac}{43560\,\cancel{ft^2}}$

$= 0.024\ ac\text{-}ft$

$\frac{.024}{3.87} =$

PROJECT NAME LADERA WEST SUBD. SHEET 1 OF 3

PROJECT NO. 2107 BY [illegible] DATE 6/2/93

SUBJECT FLOODWALL ANALYSIS CH'D _____ DATE _____

AVID ENGINEERING, INC.

COMPUTE WEIR STORAGE CAPACITY

ELEVATIONS	AREA	INCREMENTAL VOLUME	CUMMULATIVE VOLUME	
31.5	0		0	0
		150		
32.0	600		150	.003
		800		
32.5	2600		950	.02
		2900		
33.0	9000		3850	.09
		5750		
33.5	14000		9600	.22

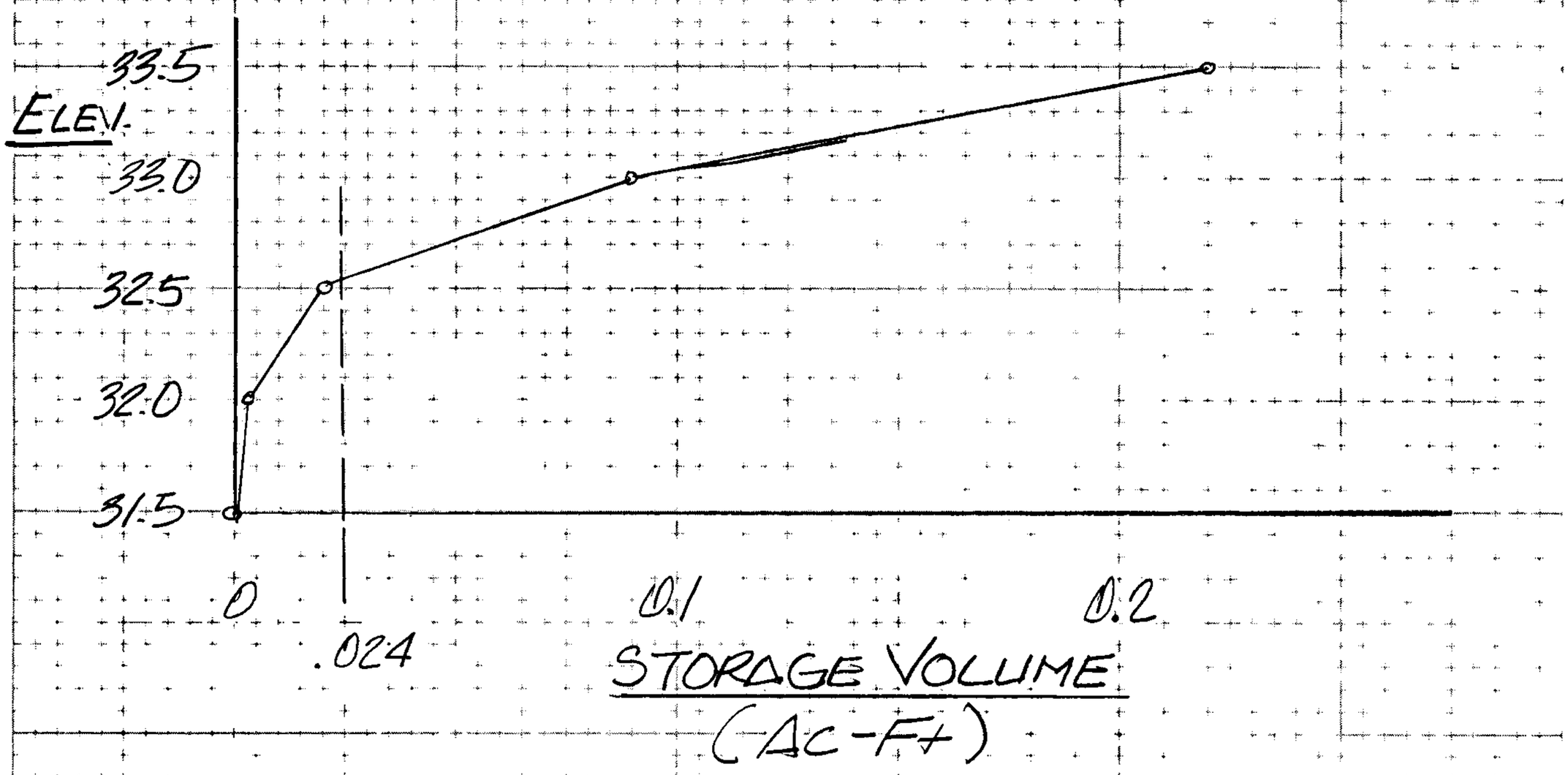

PROJECT NAME LADERA WEST SHEET 2 OF 3

PROJECT NO. 2107 BY [illegible] DATE 6/2/93

SUBJECT FLOODWALL ANALYSIS CH'D _____ DATE _____

AVID ENGINEERING, INC.

CONCLUSION

BASED ON THIS ANALYSIS THE CURRENT DESIGN FOR THE INLET WEIR IS ADEQUATELY SIZED FOR THE DESIGN STORM. ANALYSIS USING THE 'MUSLE' METHOD SHOWS THAT THE SEDIMENT GENERATED BY THE 100YR STORM EVENT IS APPROXIMATELY 0.024 AC-FT (1030 CUBIC-FT). THIS VOLUME PONDED REACHES A DEPTH OF 1.0 FT (ELEVATION 32.5). THE POND HAS CAPACITY FOR 0.22 AC-FT (9 TIMES GREATER).

THE WEIR IS DESIGNED TO PASS 125% OF THE 100YR STORM EVENT IN ADDITION TO THE VOLUME DETAINNED.

PROJECT NAME LADERA WEST SHEET 3 OF 3
PROJECT NO. 2107 BY [illegible] DATE 6/2/13
SUBJECT FLOODWALL ANALYSIS CH'D DATE

AVID ENGINEERING, INC.
Civil • Structural • Transportation
6100 Seagull Lane NE • Suite 102
Albuquerque, NM 87109 • (505) 881-5357

LETTER OF TRANSMITTAL

TO: Gilbert Aldaz, PE & LS	DATE: 6/4/93
Project Engineer	PROJECT:
COA	
3rd Floor, City/County Bldg	PROJECT NO.:
ATTN:	
RE: Ladera West Subdiv.	

WE ARE SENDING:

QTY.	DESCRIPTION	FOR
1	Den Inf. Sheet	
1	Den Rpt Addendum Letter w/ Exhibits	
1	set of Grading Plan Originals (4 sheets)	

REMARKS:

RECEIVED
JUN 7 1993

BY: Rick Delk

RECEIVED: Dolores P. Lopez DATE: 6/4/93

If enclosures are not as noted, kindly notify us at once.

City of Albuquerque
P.O. BOX 1293 ALBUQUERQUE, NEW MEXICO 87103

May 28, 1993

Rick Beltramo, P.E.
AVID Engineering
6100 Seagull NE, Suite 102
Albuquerque, NM 87109

RE: DRAINAGE REPORT FOR LADERA WEST UNIT II SUBDIVISION, (G10/D8A), ENGINEER'S STAMP DATED FEBRUARY 8, 1993, RECEIVED MAY 5, 1993 FOR FIANL PLAT AND ROUGH GRADING APPROVAL

Dear Mr. Beltramo:

Based on the information provided on the referenced submittal the plan is acceptable for Final Plat and Rough Grading Approval.

Prior to work order sign-off it appears that a retaining wall is required along the south boundary of Unit II, since grades are in excess of 18 inches in height.

Prior to sign-off of the final plat by the City Engineer, financial guarantees must be in place with DRC.

If you should have any questions, please do not hesitate to contact me.

Cordially,

Gilbert Aldaz, P.E. & P.S.
Civil Engineer/Hydrology

xc: Alan Martinez, Hydrology
wp+3763 File

DRAINAGE INFORMATION SHEET

PROJECT TITLE: LADERA WEST II ZONE ATLAS/DRAINAGE FILE # G-10 / D 8A

LEGAL DESCRIPTION: EL RANCHO ATRISCO DE LOS SANTOS

CITY ADDRESS: TODOS SANTOS STREET, NORTH OF OURAY

ENGINEERING FIRM: AVID ENGINEERING CONTACT: RICK BELTRAMO

ADDRESS: 6100 SEAGULL NE #102 PHONE: 881-5357

OWNER: CURB, INC CONTACT: CHUCK HAEGELIN

ADDRESS: 9806 GREENBRIAR NE PHONE: 881-9190

ARCHITECT: NONE CONTACT: ____

ADDRESS: ____ PHONE: ____

SURVEYOR: AVID ENGINEERING CONTACT: RUAN BACIGALUPA

ADDRESS: 6100 SEAGULL NE PHONE: 881-5357

CONTRACTOR: ____ CONTACT: ____

ADDRESS: ____ PHONE: ____

PRE-DESIGN MEETING:

___ YES

X NO

___ COPY OF CONFERENCE RECAP SHEET PROVIDED

DRB NO. DRB-92-0210

EPC NO. Z-92-42

PROJECT NO. 4450.91

TYPE OF SUBMITTAL:

___ DRAINAGE REPORT

___ DRAINAGE PLAN

___ CONCEPTUAL GRADING & DRAIN PLAN

X GRADING PLAN

___ EROSION CONTROL PLAN

___ ENGINEER'S CERTIFICATION

CHECK TYPE OF APPROVAL SOUGHT:

___ SECTOR PLAN APPROVAL

___ SKETCH PLAT APPROVAL

___ PRELIMINARY PLAT APPROVAL

___ SITE DEVELOPMENT PLAN APPROVAL

X FINAL PLAT APPROVAL

___ BUILDING PERMIT APPROVAL

___ FOUNDATION PERMIT APPROVAL

___ CERTIFICATE OF OCCUPANCY APPROVAL

X ROUGH GRADING PERMIT APPROVAL

___ GRADING/PAVING PERMIT APPROVAL

___ OTHER ____ (SPECIFY).

RECEIVED
MAY - 5 1993
HYDROLOGY DIVISION

DATE SUBMITTED: 5/4/93

BY: Rick Beltramo

REV. 10/85

AVID ENGINEERING, INC.

Civil • Structural • Transportation

May 4, 1993

Gilbert Aldaz, P.E.
City Hydrologist
City of Albuquerque
Public Works Department
Albuquerque, NM 87103

Re: LADERA WEST, PHASE 2
FINAL GRADING PLAN

Dear Gilbert:

Submitted for your review is the final grading plan for Phase 2. Your comments of April 30, 1993 have been addressed and incorporated into the plans. Please call me if you have any questions or additional comments.

Sincerely,

Rick Beltramo, P.E.
Project Manager

RB/cs
Enclosures
Job No. 3111

FILE:PROJECTS\LADERA\GILBERT.LTR

RECEIVED
MAY - 5 1993
HYDROLOGY

6100 Seagull St. NE • Suite 102 • Albuquerque, New Mexico 87109 • (505) 881-5357

DRAINAGE INFORMATION SHEET

PROJECT TITLE: LADERA WEST, II ZONE ATLAS/DRAINAGE FILE # G-10/D8A

LEGAL DESCRIPTION: EL RANCHO ATRISCO DE LOS SANTOS

CITY ADDRESS: TODOS SANTOS STREET, NORTH OF OURAY

ENGINEERING FIRM: AVID ENGINEERING CONTACT: RICK BELTRAMO

ADDRESS: 6100 SEAGULL NE #102 PHONE: 881-5357

OWNER: CURB, INC CONTACT: CHUCK HAEGELIN

ADDRESS: 9806 GREENBRIAR NE PHONE: 821-8718

ARCHITECT: NONE CONTACT: ____

ADDRESS: ____ PHONE: ____

SURVEYOR: AVID ENGINEERING CONTACT: RUAN BACIGALUPA

ADDRESS: 6100 SEAGULL NE PHONE: 881-5357

CONTRACTOR: ____ CONTACT: ____

ADDRESS: ____ PHONE: ____

PRE-DESIGN MEETING:

___ YES

X NO

___ COPY OF CONFERENCE RECAP SHEET PROVIDED

DRB NO. DRB-92-0210

EPC NO. Z-92-42

PROJECT NO. 4450.90

TYPE OF SUBMITTAL:

___ DRAINAGE REPORT

X DRAINAGE PLAN

___ CONCEPTUAL GRADING & DRAIN PLAN

___ GRADING PLAN

___ EROSION CONTROL PLAN

___ ENGINEER'S CERTIFICATION

CHECK TYPE OF APPROVAL SOUGHT:

___ SECTOR PLAN APPROVAL

___ SKETCH PLAT APPROVAL

X PRELIMINARY PLAT APPROVAL

___ SITE DEVELOPMENT PLAN APPROVAL

X FINAL PLAT APPROVAL

___ BUILDING PERMIT APPROVAL

___ FOUNDATION PERMIT APPROVAL

___ CERTIFICATE OF OCCUPANCY APPROVAL

X ROUGH GRADING PERMIT APPROVAL

___ GRADING/PAVING PERMIT APPROVAL

___ OTHER ____ (SPECIFY).

RECEIVED APR 20 1993

DATE SUBMITTED: 4/19/93

BY: RICK BELTRAMO

REV. 10/85

AVID ENGINEERING, INC.
Civil • Structural • Transportation
6100 Seagull Lane NE • Suite 102
Albuquerque, NM 87109 • (505) 881-5357

LETTER OF TRANSMITTAL

TO: FRED AGUIRRE CITY ENGINEER 3rd Floor City/County Bldg	DATE: 4/19/93 PROJECT: PROJECT NO.: 4450.91
ATTN: GILBERT ALDAZ	
RE: LADERA WEST, UNIT II	

WE ARE SENDING:

QTY.	DESCRIPTION	FOR
1	FINAL DRAINAGE PLAN	REVIEW & COMMENT

REMARKS: Fred, this detailed grading plan ~~sub~~ supplements the already approved drainage report for Ladera West. We are currently working on the construction plans and plat at this time.

BY: [signature]

RECEIVED: Suzanne Sos

DATE: 4-19-93

If enclosures are not as noted, kindly notify us at once.

April 20, 1993

TO: G10/D8A (LADERA WEST, UNIT II)

FROM: GILBERT ALDAZ

DATE: 4-29-92

ON THIS DATE I PROVIDED THE FOLLOWING VERBAL COMMENTS TO RICK BELTRAMO:

- COULD NOT READ EXISTING TOPO
- NEED A RETAINING WALL ALONG THE SOUTH BOUNDARY
- FRONT PROPERTY CORNERS NEED TO ROUNDED OFF TO 1/100th FOR FINAL GRADING APPROVAL

City of Albuquerque
P.O. BOX 1293 ALBUQUERQUE, NEW MEXICO 87103

March 5, 1993

Rick Beltramo, P.E.
AVID Engineering
6100 Seagull NE, Suite 102
Albuquerque, NM 87109

RE: DRAINAGE REPORT FOR LADERA WEST (UNITS 1 AND 11) SUBDIVISION, (G10/D8A), ENGINEER'S STAMP DATED FEBRUARY 8, 1993

Dear Mr. Domenick:

Based on the information provided on the referenced submittal received February 11, 1993, the plan is acceptable for Work Order and Final Plat approval for Phase I.

Please be advised that prior to release of financial guarantees by DRC, an Engineers Certification that the site was graded in substantial compliance with the approved plan must be submitted and approved by this office.

If you should have any questions, please do not hesitate to contact me.

Cordially,

Gilbert Aldaz, P.E. & P.S.
Civil Engineer/Hydrology

xc: Fred Aguirre, City Hydrologist
file

wp+3763

FILE G-10/D8A

City of Albuquerque

P.O. BOX 1293 ALBUQUERQUE, NEW MEXICO 87103

DESIGN REVIEW COMMITTEE MEETING 01/14/93 2:30 P.M.

PROJECT: Ladera West Subdivision Unit 1 Project No. 4450.90

CONSULTANT: AVID Engineering

PRESENT: Billy Goolsby, DRC Chairman
✓Richard Dourte, Transportation
✓Gilbert Aldaz, Hydrology
✓Rick Beltramo, AVID Engineering
Bo Johnson, Gordon & Associates
Stan Strickland, Developer
Eric Stump, AVID Engineering
✓Robert Kane, Utility Development

COMMENTS:

1. DRC Chairman discussed the approved infrastructure list. The drainage requirements need to be modified in accordance with the approved drainage plan. The Consultant will submit a letter of revision to the DRB Chairman for this purpose.

2. The Consultant discussed the required design for Ouray Road with Richard Dourte, Transportation Development, and was given input. Also, the grade for Todos Santos Street was discussed and some changes were agreed to at the intersection with Santa Catarina.

3. Gilbert Aldaz, Hydrology, provided verbal comments and mark-ups. The comments particularly pertained to the rough-grading request approval. Both Units 1 and 2 are to be shown as graded under this phase.

4. Robert Kane, Utility Development, discussed the utilities. The Consultant noted comments and concerns.

The Consultant will incorporate the appropriate comments and submit to the Master Scheduler to schedule a preliminary design review session. The submittal is to include eight (8) sets of plans, the mark-ups and a completed Figure 7 from the DPM.

BG:vgl(WP+125329)

D.R.B. Case No. 92-0210
D.R.C. Project No. _____
Date Submitted 10/2/92
Submitted By: AVID Engineering, Inc.
By: [signature]

Fred

EXHIBIT "D"
to Subdivision Improvements Agreement

DEVELOPMENT REVIEW BOARD (D.R.B.) REQUIRED INFRASTRUCTURE LISTING for EL RANCHO ATRISCO DE LOS SANTOS REPLAT (LADERA WEST) for PRELIMINARY PLAT APPROVAL

OCTOBER 6, 1992

Following is a summary of Public/Private Infrastructure required to be constructed or financially guaranteed to be constructed for the above development. This summary is not necessarily a complete listing. During the design process, if the City determines that appurtenant items have not been included in the summary, those items will be included in the listing and related financial guarantee, if the items normally are Subdivider responsibility. In addition, any unforeseen items which arise during construction which are necessary to complete the project and which normally are the Subdivider's responsibility are the responsibility of the Subdivider and will be included in the financial guarantee provided to the City.

UNIT I

SIZE & TYPE OF IMPROVEMENT	LOCATION	FROM	TO	DESCRIPTION
1. PAVING				
A. 32' ~~wide~~ F.F.R.L. residential pavement; standard curb and gutter, or mountable curb and gutter, 4' sidewalk (both sides).	Todos Santos Street	Ouray	130' South of Santa Maria Court	Approximately 750 L.F.

NOTES:

1). Waterlines include valves, fittings and services.
2). Sanitary Sewer lines include manholes and services.
3). Paving items include street lighting. ~~NOT TO BE ENLARGED~~
4). Grading and retaining walls do not require financial guarantees, but they must be certified prior to the release of financial guarantees for other items.

UNIT I (Continued)

SIZE & TYPE OF IMPROVEMENT	LOCATION	FROM	TO	DESCRIPTION
1. PAVING (Continued)				
B. 28' ~~wide~~ F.F. residential pavement; mountable curb and gutter, 4' sidewalk both sides.	Cul-de-sacs (Santo N Tomas Court, Santa Catarina Court, Santa Maria Court)	Cul-de-sac	Todos Santos Street	Approximately 560 L.F.
C. 66' ~~wide~~ FACE TO FACE arterial pavement; mountable curb and gutter, median curb & gutter, 6' sidewalk. (North half of street only)	Ouray Road	260' West of Todos Santos Street	East approximately 570 feet	Approximately 570 L.F.
D. Residential Street Lighting	Per DPM			
E. Street Trees	Ouray Road (NOT TO BE FINANCIALLY GUARANTEED.)			
2. WATER LINES				
A. 8" waterline, including valves, fittings, services and hydrants.	Todos Santos Street	Ouray	130' South of Santa Isabel Ct.	Approximately 750 L.F.
B. 4" waterline, including valves, fittings, services and hydrants.	Cul de Sacs Santo Tomas Court, Santa Catarina, Santa Maria)	West End	Todos Santos	Approximately 560 L.F.

SIZE & TYPE OF IMPROVEMENT	LOCATION	FROM	TO	DESCRIPTION
3. SANITARY SEWER LINES				
A. 8" SAS including service taps and manholes.	Todos Santos Street	130 feet South of Santa Isabel Court	Ouray	Approximately 750 L.F.
B. 8" SAS including service taps and manholes.	Santa Maria Court	West End	Todos Santos	Approximately 200 L.F.
C. 8" SAS including service taps and manholes.	Santa Catarina Court	West End	Todos Santos	Approximately 160 L.F.
D. 8" SAS including service taps and manholes.	Santo Tomas Court	West End	Todos Santos	Approximately 200 L.F.
4. DRAINAGE				
A. ~~Earthen detention dike and~~ ditch. FLOOD WALL RDB 4/20/93	~~Drainage Easement~~ ~~West of Site~~ WEST PROPERTY LINE 4/20/93	Ouray	Vista Alegre	Approximately 1400 L.F.
B. ~~30"~~ 24" ~~storm~~ drain and inlet, ~~including detention basin.~~ 4/20/93	Drainage Easement West of Site	Ouray	100' North	
C. ~~36"~~ 42" RCP storm drain, including manhole & drop inlets.	Todos Santos	~~Ouray~~ SANTA CATARINA COURT 4/20/93	~~North of Santa Catarina Court~~ S.E. QUICKWATER CHANNEL 4/20/93	Approximately 420 L.F.

UNIT II

SIZE & TYPE OF IMPROVEMENT	LOCATION	FROM	TO	DESCRIPTION
1. PAVING				
A. 32' wide residential pavement; standard curb and gutter, or mountable curb and gutter, 4' sidewalk both sides.	Todos Santos Street	Vista Alegre	130' South of Santa Isabel Court	Approximately 550 L.F.
B. 28' wide residential pavement; mountable curb and gutter, 4' sidewalk both sides.	Cul-de-sacs (San Francisco Court, Santa Isabel Court)	Cul-de-sac	Todos Santos Street	Approximately 560 L.F.
C. 20' wide arterial pavement; mountable curb and gutter,4' sidewalk. (South half of street only).	Vista Alegre	West Property Line	East approximately 720 feet	Approximately 720 L.F.
D. 4' temporary paving	Vista Alegre	West Property Line	East approximately 720 feet	Approximately 720 L.F.
E. Residential street lighting	Per DPM			
2. WATER LINES				
A. 4" waterline, including valves, fittings, services and hydrants.	Cul-de-sacs (San Francisco Court, Santa Isabel Court)	West End	Todos Santos Street	Approximately 450 L.F.
B. 8" waterline, including valves, fittings, services and hydrants.	Todos Santos	130' South of Santa Isabel Court	San Benito	Approximately 1750 L.F.
C. 10" waterline, including valves, fittings, services and hydrants.	Vista Alegre	West Property Line	East Property Line	Approximately 720 L.F.
D. 10" waterline, including valves, fittings, services and hydrants.	San Benito	Todos Santos	PNM Easement	Approximately 750 L.F.
E. 10" waterline, including valves, fittings, services and hydrants.	PNM Easement	San Benito	Rinconada Channel Easement	Approximately 130 L.F.

SIZE & TYPE OF IMPROVEMENT	LOCATION	FROM	TO	DESCRIPTION
2. WATERLINES (CONT'D)				
F. 10" waterline, including valves, fittings, services and hydrants.	Rinconada Channel Easement	PNM Easement	Unser	Approximately 200 L.F.
3. SANITARY SEWER LINES				
A. 8" SAS including service taps and manholes.	Todos Santos Street	130 feet South of Santa Isabel Court	Vista Alegre	Approximately 550 L.F.
B. 8" SAS including service taps and manholes.	Santa Isabel Court	West End	Todos Santos	Approximately 200 L.F.
C. 8" SAS including service taps and manholes.	San Franciscito Court	West End	Todos Santos	Approximately 250 L.F.
D. 8" SAS including service taps and manholes.	Vista Alegre	East End	~~Todos Santos~~ WEST END	Approximately 600 L.F.

D.R.B. Case No. 92-0210
D.R.C. Project No. _____
Date Submitted 10/2/92
Submitted By: AVID Engineering, Inc.
By: James R. Komarek

EXHIBIT "D"
to Subdivision Improvements Agreement

DEVELOPMENT REVIEW BOARD (D.R.B.)
REQUIRED INFRASTRUCTURE LISTING
for EL RANCHO ATRISCO DE LOS SANTOS REPLAT
(LADERA WEST)
for PRELIMINARY PLAT APPROVAL

OCTOBER 6, 1992

Approved on 10-6-92, by the Development Review Board

Jack Cloud Planning Department	JLC 4-20-93 10-6-92 Date RWK 4-20-93
Robert W. Kane Utility Development Division, City Engineer	10-6-92 Date RWK 4-20-93
Michael Daniel Transportation Development Division, Traffic Engineer	10-06-92 Date MS 4/20/93
Andrew M. Stone Parks and Recreation Department	10/6/92 Date JPR 4/20/93
Fred D. Crozier Jr. City Engineer/AMAFCA	10/6/92 Date

DRAINAGE INFORMATION SHEET

PROJECT TITLE: ANDERA WEST ZONE ATLAS/DRAINAGE FILE # G-10/D8A

LEGAL DESCRIPTION: EL RANCHO ATRISCO DE LOS SANTOS

CITY ADDRESS: TODOS SANTOS STREET, NORTH OF OURAY

ENGINEERING FIRM: AVID ENGINEERING CONTACT: RICK BELTRAMO

ADDRESS: 6100 SEAGULL NE #102 PHONE: 881-5357

OWNER: CURB, INC CONTACT: CHUCK HAEGELIN

ADDRESS: 9806 GREENBRIAR NE PHONE: 821-8718

ARCHITECT: NONE CONTACT:

ADDRESS: PHONE:

SURVEYOR: AVID ENGINEERING CONTACT: RUAN BACIGALUPA

ADDRESS: 6100 SEAGULL NE PHONE: 881-5357

CONTRACTOR: CONTACT:

ADDRESS: PHONE:

PRE-DESIGN MEETING:

X YES

___ NO

X COPY OF CONFERENCE RECAP SHEET PROVIDED

DRB NO. DRB-92-0210

EPC NO. Z-92-42

PROJECT NO. 4450.90

RECEIVED FEB 11 1993 HYDROLOGY DIVISION

TYPE OF SUBMITTAL:

X DRAINAGE REPORT

___ DRAINAGE PLAN

___ CONCEPTUAL GRADING & DRAIN PLAN

___ GRADING PLAN

___ EROSION CONTROL PLAN

___ ENGINEER'S CERTIFICATION

CHECK TYPE OF APPROVAL SOUGHT:

___ SECTOR PLAN APPROVAL

___ SKETCH PLAT APPROVAL

___ PRELIMINARY PLAT APPROVAL

___ SITE DEVELOPMENT PLAN APPROVAL

X FINAL PLAT APPROVAL

___ BUILDING PERMIT APPROVAL

___ FOUNDATION PERMIT APPROVAL

___ CERTIFICATE OF OCCUPANCY APPROVAL

N/A ROUGH GRADING PERMIT APPROVAL

___ GRADING/PAVING PERMIT APPROVAL

X OTHER work order (SPECIFY).

DATE SUBMITTED: 2/10/93

BY: RICK BELTRAMO

REV. 10/85

DRAINAGE INFORMATION SHEET

PROJECT TITLE: LADERA WEST ZONE ATLAS/DRAINAGE FILE # G-10/D 8A

LEGAL DESCRIPTION: EL RANCHO ATRISCO DE LOS SANTOS

CITY ADDRESS: TODOS SANTOS STREET, NORTH OF OURAY

ENGINEERING FIRM: AVID ENGINEERING CONTACT: JIM DOMENICK

ADDRESS: 6100 SEAGULL NE #102 PHONE: 881-5357

OWNER: CURB, INC CONTACT: CHUCK HAEGELIN

ADDRESS: 9806 GREENBRIAR NE PHONE: 821-8718

ARCHITECT: NONE CONTACT: _____

ADDRESS: _____ PHONE: _____

SURVEYOR: AVID ENGINEERING CONTACT: RUAN BACIGALUPA

ADDRESS: 6100 SEAGULL NE PHONE: 881-5357

CONTRACTOR: _____ CONTACT: _____

ADDRESS: _____ PHONE: _____

PRE-DESIGN MEETING:

X YES

___ NO

X COPY OF CONFERENCE RECAP SHEET PROVIDED

DRB NO. DRB-92-0210

EPC NO. Z-92-42

PROJECT NO. _____

RECEIVED JAN 26 1993 HYDROLOGY DIVISION

TYPE OF SUBMITTAL:

___ DRAINAGE REPORT

X DRAINAGE PLAN

___ CONCEPTUAL GRADING & DRAIN PLAN

___ GRADING PLAN

___ EROSION CONTROL PLAN

___ ENGINEER'S CERTIFICATION

CHECK TYPE OF APPROVAL SOUGHT:

___ SECTOR PLAN APPROVAL

___ SKETCH PLAT APPROVAL

___ PRELIMINARY PLAT APPROVAL

___ SITE DEVELOPMENT PLAN APPROVAL

___ FINAL PLAT APPROVAL

___ BUILDING PERMIT APPROVAL

___ FOUNDATION PERMIT APPROVAL

___ CERTIFICATE OF OCCUPANCY APPROVAL

X ROUGH GRADING PERMIT APPROVAL

___ GRADING/PAVING PERMIT APPROVAL

___ OTHER _____ (SPECIFY).

DATE SUBMITTED: 1/26/93

BY: RICK BELTRAMO

REV. 10/85

AVID ENGINEERING, INC.
Civil • Structural • Transportation
6100 Seagull Lane NE • Suite 102
Albuquerque, NM 87109 • (505) 881-5357

LETTER OF TRANSMITTAL

TO: Gilbert Aldaz, P.E. - City Hydrologist City of Alb.	DATE: 1/26/93
	PROJECT: Ladera West
	PROJECT NO.: 2107.50
ATTN:	
RE: Rough Grading Approval.	

WE ARE SENDING:

QTY.	DESCRIPTION	FOR
1set	Original Grading and Drainage Plan, Sheets 1 & 2	
1set	Various plan mark-ups,	returned.
2sets	Blueline	For Signature
1	Drainage Information Sheet	

RECEIVED
JAN 26 1993
HYDROLOGY DIVISION

REMARKS: Gilbert, we have addressed your comments and are returning the original and 2 bluelines for signature. Also returned are various comment sheets. We have made copies for inclusion into our work ~~orders~~ order plan submittal.

Please sign and return the signed original and 1 signed blueline.

BY: [signature]

RECEIVED: _____ DATE: _____

If enclosures are not as noted, kindly notify us at once.

AVID ENGINEERING, INC.
Civil • Structural • Transportation
6100 Seagull Lane NE • Suite 102
Albuquerque, NM 87109 • (505) 881-5357

LETTER OF TRANSMITTAL

TO: Gilbert Aldaz, P.E. - City Hydrologist City of Alb.	DATE: 1/26/93
	PROJECT: Landera West
	PROJECT NO.: 2107.50
ATTN:	
RE: Rough Grading Approval.	

WE ARE SENDING:

QTY.	DESCRIPTION	FOR
1set	Original Grading and Drainage Plan, Sheets 1 & 2	
1set	Various plan mark-ups.	returned.
2sets	Bluelines	For Signature
1	Drainage Information Sheet	

REMARKS: Gilbert, we have addressed your comments and are returning the original and 2 bluelines for signature. Also returned are various comment sheets. We have made copies for inclusion into our work ~~orders~~ order plan submittal.

Please sign and return the signed original and 1 signed blueline.

BY: [signature]

RECEIVED: _____ DATE: _____

If enclosures are not as noted, kindly notify us at once.

JAN 14, 1993

TO: G-10 / D 8A LADERA WEST

FROM: GILBERT

RE: ROUGH GRADING SUBMITTAL RECEIVED
DECEMBER 18, 1993

- MET W/ RICK BELTRAMO & BO JOHNSON PROVIDED COMMENTS ON MARK-UPS THAT NEED TO BE ADDRESSED PRIOR TO PERMIT APPROVAL.

- RICK WILL MAKE CHANGES REQUESTED & RESUBMIT IN NEXT COUPLE OF ~~WEEKS~~ DAYS PRIOR TO SIGNING-OFF, HE WILL RETURN MY MARKUPS.

TO: G-10 / DBA

FROM: GILBERT

RE: ROUGH GRADING SUBMITTAL

RECEIVED JANUARY 26, 1993

DATE: FEB. 11, 1993

SIGNED - OFF ON THIS PLAN
01/26/93 FOR ROUGH GRADING
ONLY

DRAINAGE INFORMATION SHEET

PROJECT TITLE: LADERA WEST ZONE ATLAS/DRAINAGE FILE # G-10 / D 84

LEGAL DESCRIPTION: EL RANCHO ATRISCO DE LOS SANTOS

CITY ADDRESS: TODOS SANTOS STREET, NORTH OF OURAY

ENGINEERING FIRM: AVID ENGINEERING CONTACT. RICK BELTRAMO

ADDRESS: 6100 SEAGULL NE #102 PHONE: 881-5357

OWNER: CURB, INC CONTACT: CHUCK HAEGELIN

ADDRESS: 9806 GREENBRIAR NE PHONE: 821-8718

ARCHITECT: NONE CONTACT: ____

ADDRESS: ____ PHONE: ____

SURVEYOR: AVID ENGINEERING CONTACT: RUAN BACIGALUPA

ADDRESS: 6100 SEAGULL NE PHONE: 881-5357

CONTRACTOR: ____ CONTACT: ____

ADDRESS: ____ PHONE: ____

PRE-DESIGN MEETING:

X YES

___ NO

X COPY OF CONFERENCE RECAP SHEET PROVIDED

RECEIVED
DEC 18 1992
HYDROLOGY DIVISION

DRB NO. DRB-92-0210

EPC NO. Z-92-42

PROJECT NO. ____

TYPE OF SUBMITTAL:

___ DRAINAGE REPORT

___ DRAINAGE PLAN

___ CONCEPTUAL GRADING & DRAIN PLAN

X GRADING PLAN

___ EROSION CONTROL PLAN

___ ENGINEER'S CERTIFICATION

CHECK TYPE OF APPROVAL SOUGHT:

___ SECTOR PLAN APPROVAL

___ SKETCH PLAT APPROVAL

___ PRELIMINARY PLAT APPROVAL

___ SITE DEVELOPMENT PLAN APPROVAL

___ FINAL PLAT APPROVAL

___ BUILDING PERMIT APPROVAL

___ FOUNDATION PERMIT APPROVAL

___ CERTIFICATE OF OCCUPANCY APPROVAL

X ROUGH GRADING PERMIT APPROVAL

___ GRADING/PAVING PERMIT APPROVAL

___ OTHER ____ (SPECIFY).

DATE SUBMITTED: 1/4/93

BY: Rick Beltramo

REV. 10/85

AVID ENGINEERING, INC.

Civil • Structural • Transportation

December 31, 1992

Mr. Gilbert Aldaz, P.E.,P.S.
City Hydrologist
Public Works Department
City Of Albuquerque
City/County Building, 3rd Floor

RE: ROUGH GRADING PLAN FOR LADERA SUBDIVISION, UNIT I G-10

Dear Gilbert:

Submitted for your review and approval is the rough grading plan for the first phase of Ladera West subdivision. A drainage plan has been submitted for this project and has been reviewed by your office. Since that time a new outfall has been selected for both the sanitary sewer and the storm drain. The new design allowed for lowering the site grading. The rough grading plan takes into account the design revisions.

On November 16, 1992 James Domenick and I meet with you to discuss the new design and the process for plan submittals, more importantly the rough grading plan requirements. It was determined that a rough grading plan would be accepted by you prior to having the details of the storm drain incorporated into the drainage report. The drainage report will be revised for the new design and resubmitted to you shortly.

Following our meeting I had another meeting with Fred Aguirre, you were unavailable, and presented the new design to Fred for his review and comment. The design was approved in concept by Fred but has yet to have a detail design review. Steve Boberg also reviewed the concept. The new design consists of deleting the connection of the outfall storm drain to the Ouray and instead connecting directly to the Quickflow channel. An overflow concept was also approved by Fred which allows runoff to pass through the subdivision in the event that the storm sewer fails.

The plan submitted shows the plan view of the proposed storm drain. A hydraulic gradeline analysis has been completed which sized the outfall storm drain. The details of the design will be submitted in the revised drainage report and with the DRC construction plans. Should you have any questions regarding this submittal please call anytime.

Sincerely,

Rick Beltramo, P.E.
Project Manager

Attachments

cc: Charles Haegelin
Stan Strickman

File: 2107.50

6100 Seagull St. NE • Suite 102 • Albuquerque, New Mexico 87109 • (505) 881-5357

DRAINAGE INFORMATION SHEET

PROJECT TITLE: LADERA WEST ZONE ATLAS/DRAINAGE FILE # G-10 /8A

LEGAL DESCRIPTION: EL RANCHO ATRISCO DE LOS SANTOS

CITY ADDRESS: TODOS SANTOS STREET, NORTH OF OURAY

ENGINEERING FIRM: AVID ENGINEERING CONTACT: JIM DOMENICK

ADDRESS: 6100 SEAGULL NE #102 PHONE: 881-5357

OWNER: CURB, INC CONTACT: CHUCK HAEGELIN

ADDRESS: 9806 GREENBRIAR NE PHONE: 821-8718

ARCHITECT: NONE CONTACT: _____

ADDRESS: _____ PHONE: _____

SURVEYOR: AVID ENGINEERING CONTACT: RUAN BACIGALUPA

ADDRESS: 6100 SEAGULL NE PHONE: 881-5357

CONTRACTOR: _____ CONTACT: _____

ADDRESS: _____ PHONE: _____

RECEIVED DEC 18 1992 HYDROLOGY DIVISION

PRE-DESIGN MEETING:

X YES

___ NO

___ COPY OF CONFERENCE RECAP SHEET PROVIDED

DRB NO. DRB-92-0210

EPC NO. Z-92-42

PROJECT NO. _____

TYPE OF SUBMITTAL:

___ DRAINAGE REPORT

___ DRAINAGE PLAN

X CONCEPTUAL GRADING & DRAIN PLAN

___ GRADING PLAN

___ EROSION CONTROL PLAN

___ ENGINEER'S CERTIFICATION

CHECK TYPE OF APPROVAL SOUGHT:

___ SECTOR PLAN APPROVAL

___ SKETCH PLAT APPROVAL

___ PRELIMINARY PLAT APPROVAL

___ SITE DEVELOPMENT PLAN APPROVAL

___ FINAL PLAT APPROVAL

___ BUILDING PERMIT APPROVAL

___ FOUNDATION PERMIT APPROVAL

___ CERTIFICATE OF OCCUPANCY APPROVAL

___ ROUGH GRADING PERMIT APPROVAL

___ ~~GRADING/PAVING PERMIT~~ APPROVAL

X OTHER CONCEPT (SPECIFY). DESIGN

DATE SUBMITTED: 12/17/92

BY: [signature]

REV. 10/85

AVID ENGINEERING, INC.
Civil • Structural • Transportation
6100 Seagull Lane NE • Suite 102
Albuquerque, NM 87109 • (505) 881-5357

RECEIVED
DEC 18 1992
HYDROLOGY DIVISION

LETTER OF TRANSMITTAL

TO: Gilbert Aldez	DATE: 12/17/92
COA	PROJECT:
HYDROLOGY DEPT.	
3rd flor, City County Bldg.	PROJECT NO.: 2107.50
ATTN:	
RE: LADERA WEST SUBDIVISION	

WE ARE SENDING:

QTY.	DESCRIPTION	FOR
1	DRAINAGE INFO SHEET	
1 set	Concept Details (2 sheets)	
1 set	Concept DESIGN TO FIRED (4 sheets)	

REMARKS: Gilbert, transmitted are drawings showing our proposed SID DESIGN. Fred has reviewed and approved the basic design concept. The second submittal proposes 1 revision to the plan Fred has seen. We propose a 15' drainage easement as opposed to a 20' easement. This is due to the trench prism only needs 15'

In order to meet the project schedules we need a resolution on the easement and design soon. Please review and comment.

BY: [signature]

RECEIVED: _____ DATE: _____

If enclosures are not as noted, kindly notify us at once.

AVID ENGINEERING, INC.
Civil • Structural • Transportation
6100 Seagull Lane NE • Suite 102
Albuquerque, NM 87109 • (505) 881-5357

LETTER OF TRANSMITTAL

TO: Gilbert Aldez	DATE: 12/17/92
COA	PROJECT:
HYDROLOGY DEPT.	
3rd flor City Count. Bldg	PROJECT NO.: 2107.50
ATTN:	
RE: LADERA WEST SUBDIVISION	

WE ARE SENDING:

QTY.	DESCRIPTION	FOR
1	DRAINAGE INFO SHEET	✓
1 set	Concept Details (2 sheets)	
1 set	Concept DESIGN TO FIRO	(4 sheets)

REMARKS: Gilbert transmitted are drawings showing our proposed SID DESIGN. Fred has reviewed and approved the basic design concept. The second submittal proposes 1 revision to the plan Fred has seen. We propose a 15' drainage easement as opposed to a 20' easement. This is due to the trench prism only needs 15'

In order to meet the project schedules we need a resolution on the easement and design soon. Please review and comment.

BY: [signature]

RECEIVED: _____ DATE: _____

If enclosures are not as noted, kindly notify us at once.

Post-It™ brand fax transmittal memo 7671 | # of pages ▸ 2/2

To Bob Kunz		From Rick Beltrami	
Co.		Co.	
Dept.		Phone #	
Fax #		Fax #	

Post-It™ brand fax transmittal memo 7671 | # of pages ▸ 2/2

To Gilbert Alvarez		From Rick Beltrami	
Co. COA		Co.	
Dept. HYDROLOGY		Phone #	
Fax # 768-3629		Fax #	

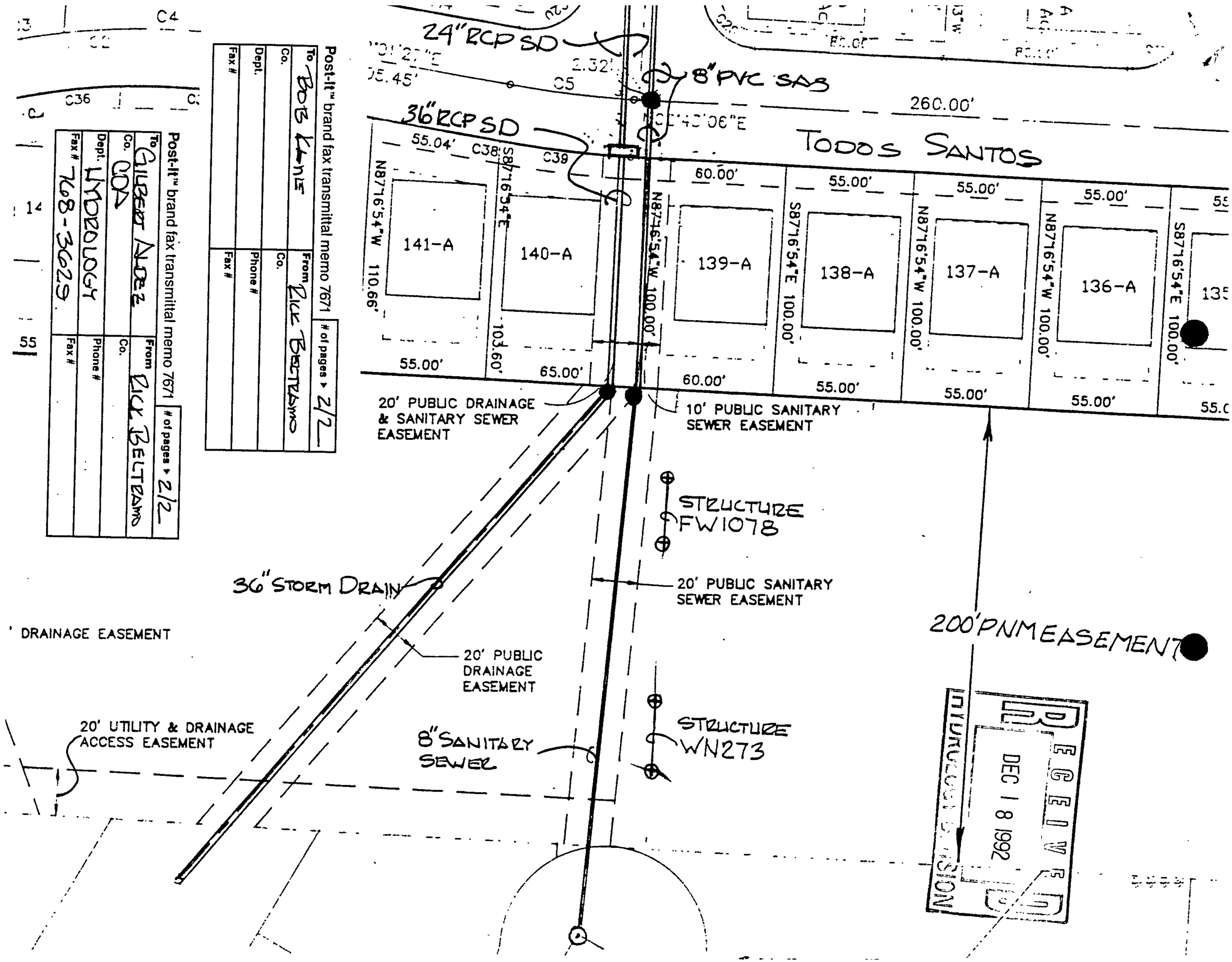

AVID ENGINEERING, INC.

Faxed 12/11/92 RB
Rec Faxed 12/14/92 RB

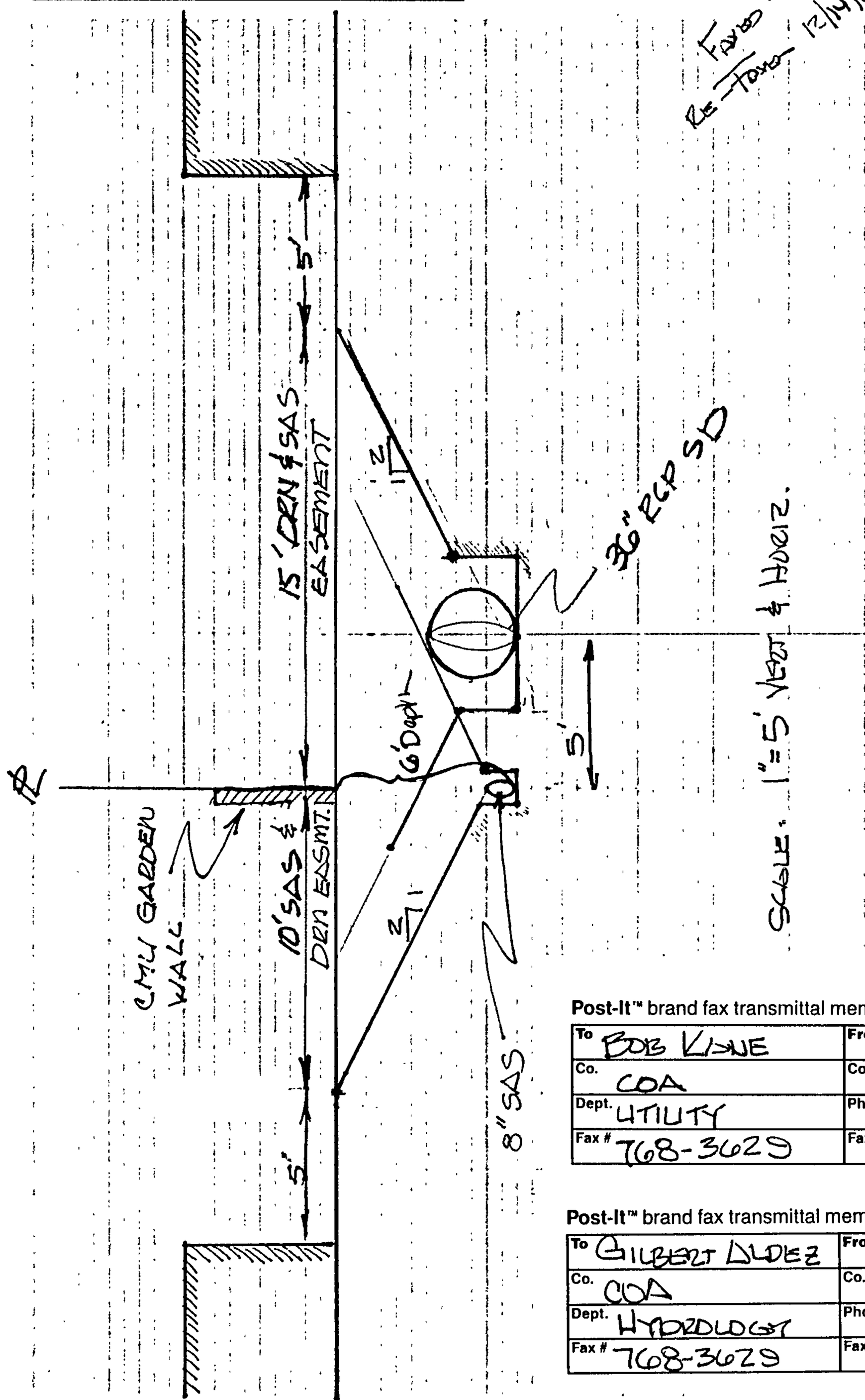

RECEIVED
DEC 18 1992
HYDROLOGY DIVISION

Post-It™ brand fax transmittal memo 7671 | # of pages ▸ 1/2

To BOB KINE	From RICK BELTRAMO
Co. COA	Co. AVID
Dept. UTILITY	Phone # 881-5357
Fax # 768-3629	Fax # 881-7602

Post-It™ brand fax transmittal memo 7671 | # of pages ▸ 1/2

To GILBERT ALDEZ	From RICK BELTRAMO
Co. COA	Co. AVID
Dept. HYDROLOGY	Phone # 881-5357
Fax # 768-3629	Fax #

PROJECT NAME LADERA WEST SHEET 1 OF 1
PROJECT NO. 2107.50 BY RB DATE 12/11/92
SUBJECT UTILITY LAYOUT CH'D DATE

AVID ENGINEERING, INC.

Sent Dec. 7 2:25 pm

Civil • Structural • Transportation

FAX COVER SHEET

DATE: 12/7/92

RE: LADERA WEST SUBDIVISION, FILE G-10

FAX TO:

FAX NUMBER TO: FRED AGUIRRE, 768-3629

NAME:

COMPANY: COA

RECEIVED
DEC 18 1992
HYDROLOGY DIVISION

FAX FROM:

FAX NUMBER FROM: 881-7602

NAME: RICK BELTRAMO

NUMBER OF PAGES (Including Cover Sheet): 4

REMARKS/COMMENTS: FRED, please review these primitive sketches. This is our proposal for the emergency overflow weir. Please call if you have any questions. Your ok on this design will allow us to proceed with the plat, rough grading plan and drainage report.

6100 Seagull St. NE • Suite 102 • Albuquerque, New Mexico 87109 • (505) 881-5357

AVID DESIGN, INC.

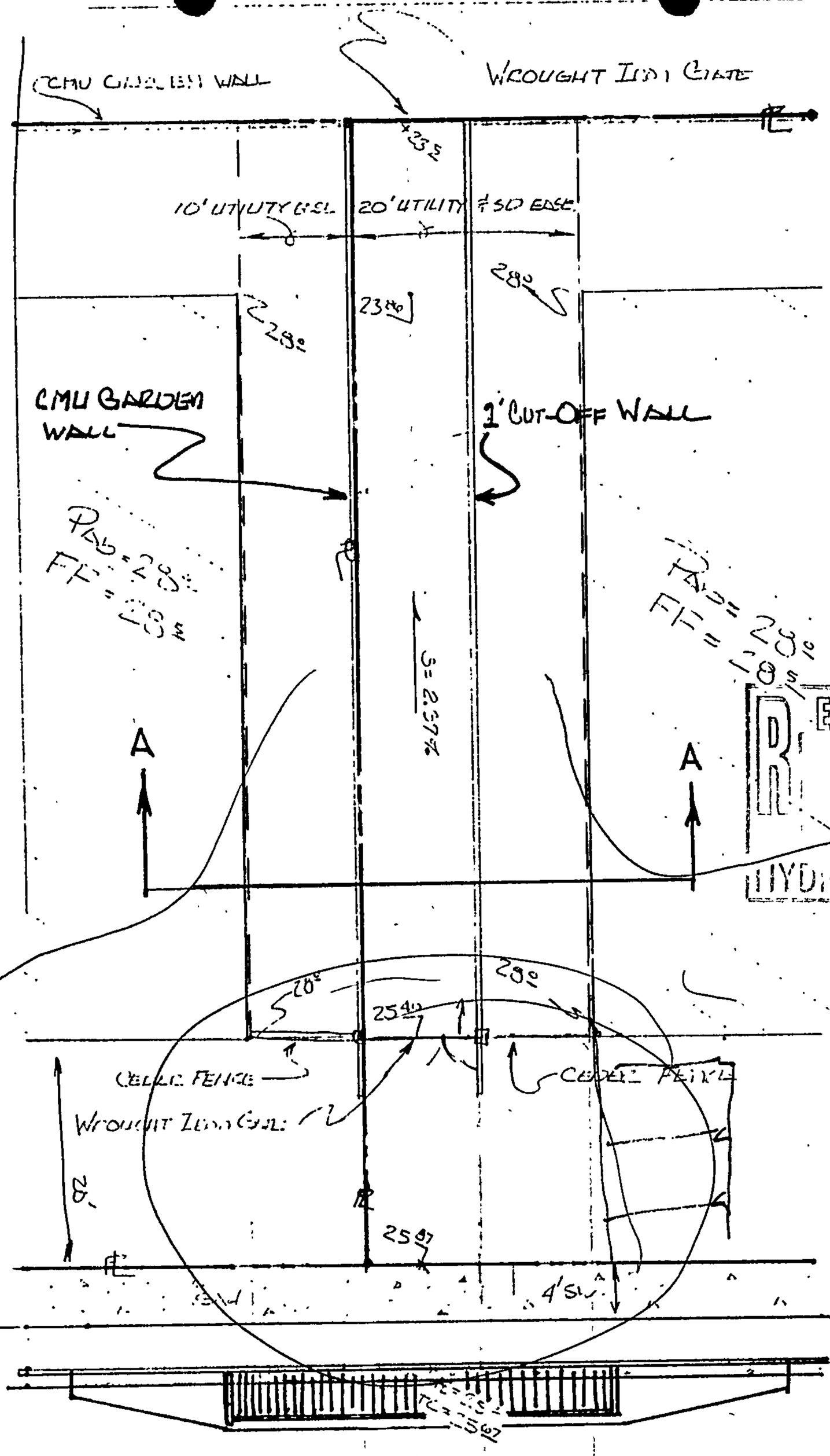

PLAN VIEW NTS

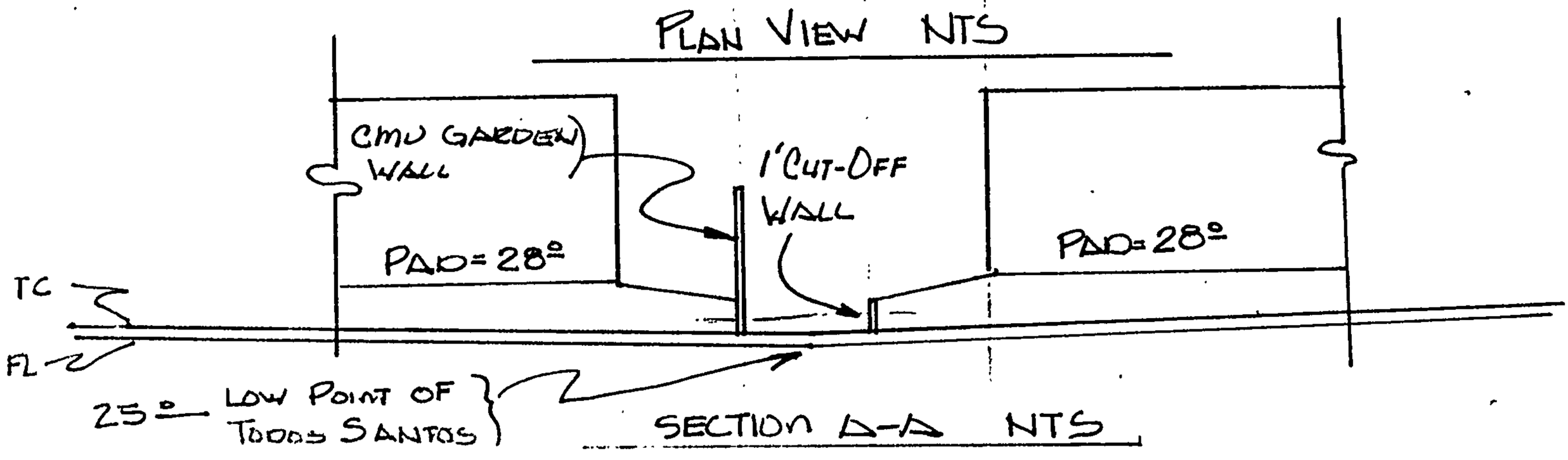

SECTION A-A NTS

RECEIVED
DEC 18 1992
HYDROLOGY

AVID ENGINEERING, INC.

262-3017

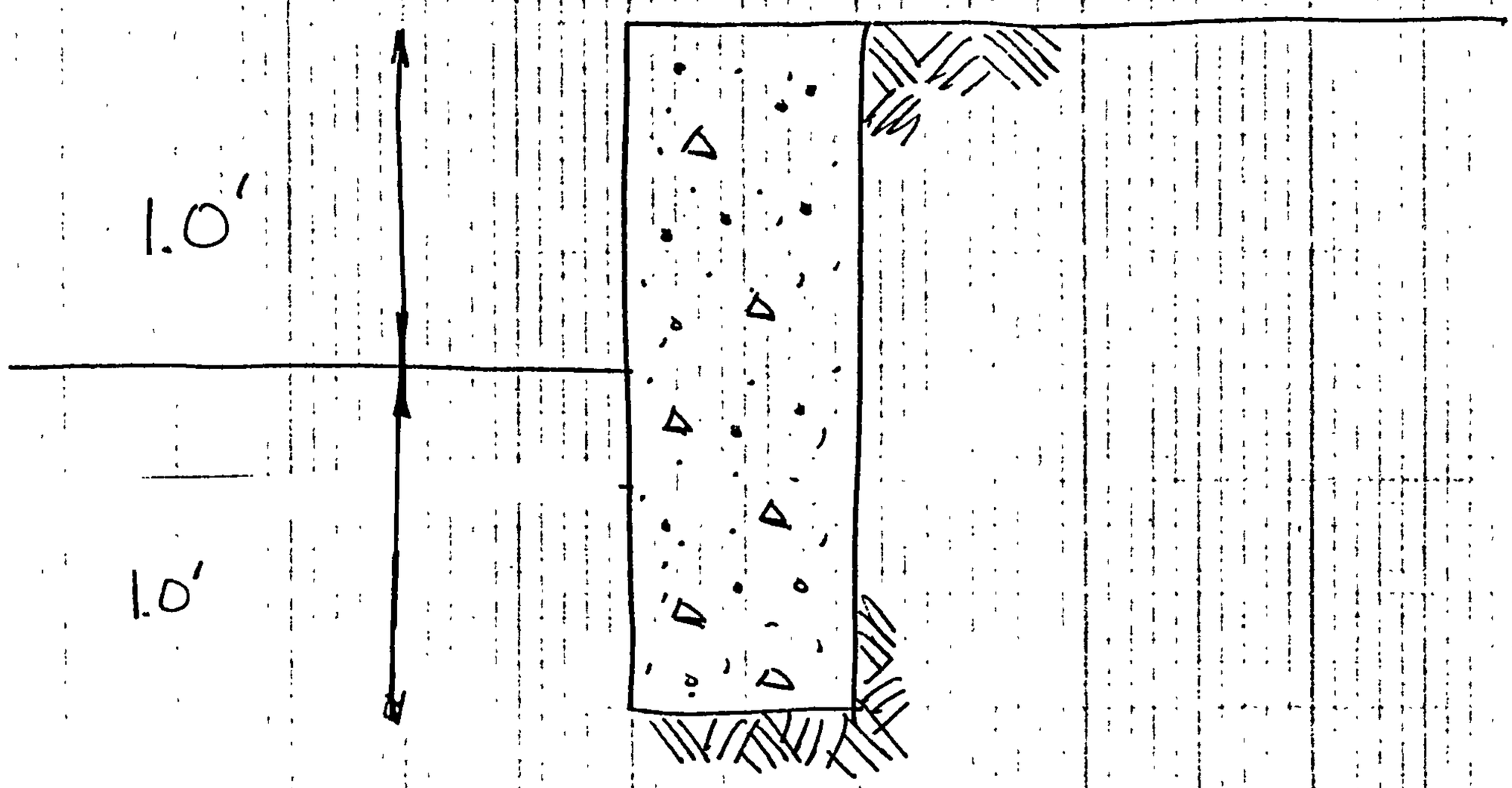

1' CUT-OFF WALL

COA DETAIL 2415

RECEIVED
DEC 18 1992
HYD

PROJECT NAME _____ SHEET _____ OF _____

PROJECT NO. _____ BY _____ DATE _____

SUBJECT _____ CH'D _____ DATE _____

AVID ENGINEERING, INC.

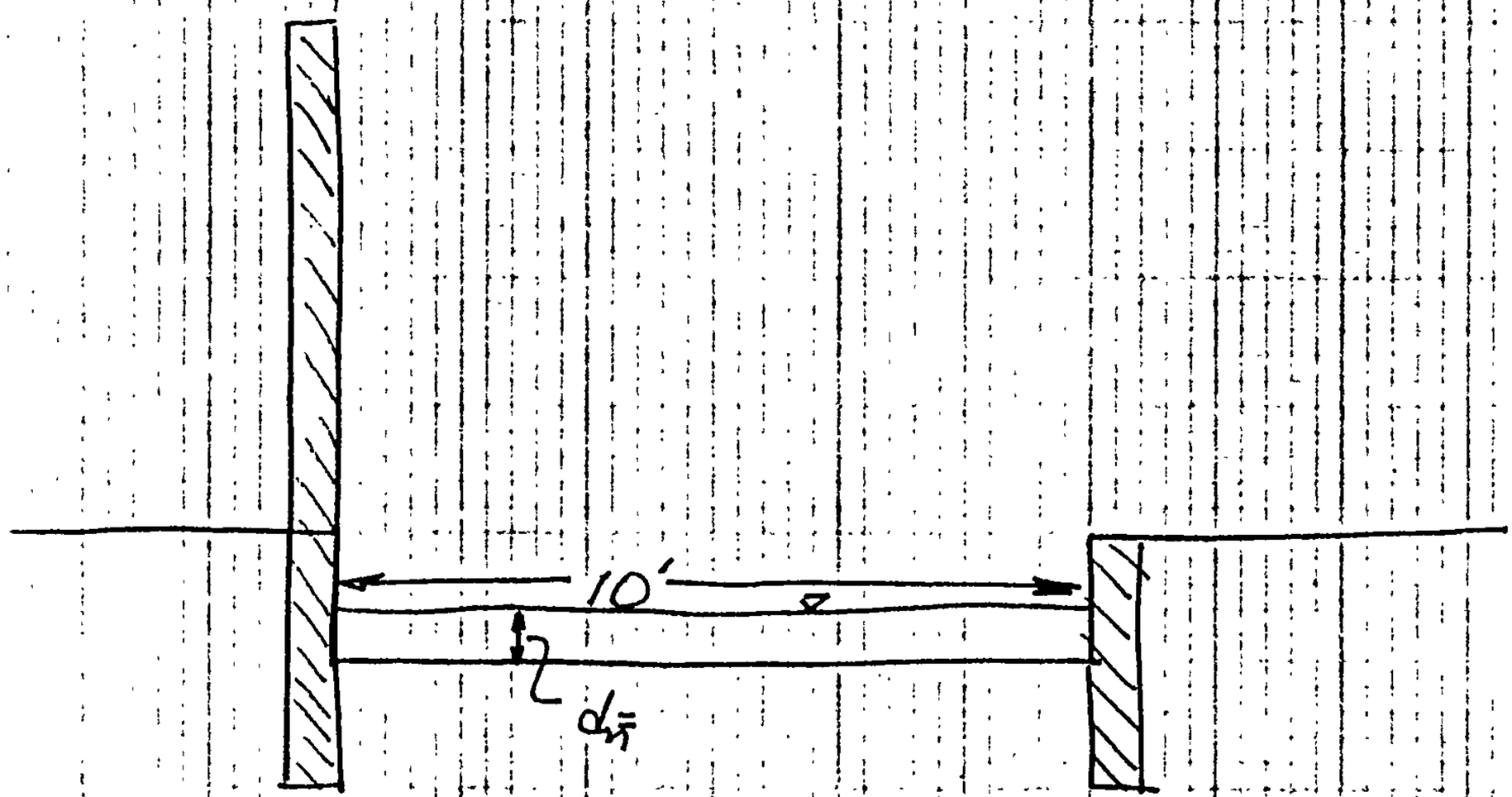

OVERFLOW HYDRAULICS

$Q = 55$ CFS

$n = .030$

$S = 2.37\%$

$d_n = 0.88$ ft < 1.0 ft [ok]

$V_n = 6.22$ ft/sec [ok for emergency overflow]

RECEIVED
DEC 18 1992
HYDROLOGY DIVISION

PROJECT NAME _____ SHEET _____ OF _____

PROJECT NO. _____ BY _____ DATE _____

SUBJECT _____ CH'D _____ DATE _____

City of Albuquerque
P.O. BOX 1293 ALBUQUERQUE, NEW MEXICO 87103

November 9, 1992

Jim Domenick, P.E.
AVID Engineering
6100 Seagull NE, Suite 102
Albuquerque, NM 87109

RE: DRAINAGE REPORT FOR LADERA WEST (UNITS 1 AND 11) SUBDIVISION, (G10/D8A), ENGINEER'S STAMP DATED OCTOBER 29, 1992

Dear Mr. Domenick:

Based on the information provided on the referenced submittals received August 10, 1992 and October 29, 1992 the plan is acceptable for Preliminary Plat with the following comment that should be amended prior to Work Order approval:

1. Since you were unable to obtain an offsite drainage easement along the west boundary, it appears that the floodwall with storm drain may be acceptable if it can be maintained. I would suggest that a minimum 10 foot wide concrete channel be built from the street to the inlet. This channel would serve as an emergency spillway and maintenance access. This concrete channel should then be dedicated as City Right-of-Way on the plat. Be advised that if you are looking to get FHA financing for this subdivision, FHA will be looking for this system to be publicly maintained and would probably prefer this alternative.

The infrastructure list should also be revised to include the floodwall, storm drain pipe and concrete channel. Prior to Final Plat sign-off by the City Engineer, financial guarantees must be in place with DRC. If you should have any questions, please do not hesitate to contact me.

Cordially,

Gilbert Aldaz, P.E. & P.S.
Civil Engineer/Hydrology

xc: Fred Aguirre, City Hydrologist
wp+3763
file

DRAINAGE INFORMATION SHEET

PROJECT TITLE: LADERA WEST ZONE ATLAS/DRAINAGE FILE # G-10

LEGAL DESCRIPTION: EL RANCHO ATRISCO DE LOS SANTOS

CITY ADDRESS: TODOS SANTOS STREET, NORTH OF OURAY

ENGINEERING FIRM: AVID ENGINEERING CONTACT: JIM DOMENICK

ADDRESS: 6100 SEAGULL NE #102 PHONE: 881-5357

OWNER: CURB, INC CONTACT: CHUCK HAEGELIN

ADDRESS: 9806 GREENBRIAR NE PHONE: 821-8718

ARCHITECT: NONE CONTACT: _____

ADDRESS: _____ PHONE: _____

SURVEYOR: AVID ENGINEERING CONTACT: RUAN BACIGALUPA

ADDRESS: 6100 SEAGULL NE PHONE: 881-5357

CONTRACTOR: _____ CONTACT: _____

ADDRESS: _____ PHONE: _____

PRE-DESIGN MEETING:

X YES

___ NO

X COPY OF CONFERENCE RECAP SHEET PROVIDED

DRB NO. DRB-92-0210

EPC NO. Z-92-42

PROJECT NO. _____

TYPE OF SUBMITTAL:

X DRAINAGE REPORT

___ DRAINAGE PLAN

___ CONCEPTUAL GRADING & DRAIN PLAN

___ GRADING PLAN

___ EROSION CONTROL PLAN

___ ENGINEER'S CERTIFICATION

CHECK TYPE OF APPROVAL SOUGHT:

___ SECTOR PLAN APPROVAL

___ SKETCH PLAT APPROVAL

X PRELIMINARY PLAT APPROVAL

___ SITE DEVELOPMENT PLAN APPROVAL

___ FINAL PLAT APPROVAL

___ BUILDING PERMIT APPROVAL

___ FOUNDATION PERMIT APPROVAL

___ CERTIFICATE OF OCCUPANCY APPROVAL

___ ROUGH GRADING PERMIT APPROVAL

___ GRADING/PAVING PERMIT APPROVAL

___ OTHER _____ (SPECIFY)

RECEIVED
OCT 29 1992
HYDROLOGY DIVISION

DATE SUBMITTED: _____

BY: _____

REV. 10/85

AVID ENGINEERING, INC.
Civil • Structural • Transportation
6100 Seagull Lane NE • Suite 102
Albuquerque, NM 87109 • (505) 881-5357

LETTER OF TRANSMITTAL

TO: CITY HYDROLOGY	DATE: 10/29/92
3RD FLOOR	PROJECT: LADERA WEST
OLD CITY HALL	(EL RANCHO ATRISCO)
	PROJECT NO.:
ATTN: GILBERT ALDAZ	
RE:	

WE ARE SENDING:

QTY.	DESCRIPTION	FOR
1	DRAINAGE REPORT	

REMARKS:

RECEIVED
OCT 30
HYDROLOGY DIVISION

RECEIVED
OCT 29
HYDROLOGY DIVISION

BY:

RECEIVED: Dolores P. Lopez

DATE:

If enclosures are not as noted, kindly notify us at once.

Gilbert - This submittal came in on 10/30/92 for P.P., But there's already a P.P. subm. in the computer for 8/10/92. Do you want this stamped on 8/10, or do you want me to log out the old subm. and log this one in on 10/30/92. Let me know.

AL.

AVID ENGINEERING, INC.

Civil • Structural • Transportation

October 28, 1992

Mr. Gilbert Aldaz, P.E. & L.S.
City/County Floodplain Administrator
Public Works Department/Hydrology
City of Albuquerque
P.O. Box 1293
Albuquerque, NM 87103

**Re: EL RANCHO ATRISCO DE LOS SANTOS SUBDIVISION.
REVISED DRAINAGE REPORT AND INFRASTRUCTURE LIST.
DRB 92-0210. ZONE ATLAS MAP G-10.**

Dear Gilbert:

Enclosed is the revised drainage report for the replat of El Rancho Atrisco de Los Santos Subdivision. It reflects the comments made at our October 21, 1992 meeting.

The revised plan includes a storm drain in Todos Santos Street with free discharge into the 60" storm drain in Ouray. The offsite flows coming from the west are directed to a storm drain by a reinforced concrete floodwall along the west boundary of the subdivision. The hydrology largely follows that in the previous RTI study for the site.

Also enclosed is a revised infrastrucure list showing the changes resulting from this plan. If you find it acceptable, we will submit to DRB to ammend the infrastructure list to reflect the revisions.

Thanks again for help in finding a workable plan for this site. If you have questions or need any additional information, please call.

Sincerely,

James V. Domenick, P.E.
Principal

cc: Fred Aguirre
Chuck Haegelin

Enclosures

6100 Seagull St. NE • Suite 102 • Albuquerque, New Mexico 87109 • (505) 881-5357

D.R.B. Case No. 92-0210
D.R.C. Project No. _____
Date Submitted 10/2/92
Submitted By: AVID Engineering, Inc.
By: [signature]

EXHIBIT "D"
to Subdivision Improvements Agreement

DEVELOPMENT REVIEW BOARD (D.R.B.) REQUIRED INFRASTRUCTURE LISTING for EL RANCHO ATRISCO DE LOS SANTOS REPLAT (LADERA WEST) for PRELIMINARY PLAT APPROVAL

OCTOBER 6, 1992

Following is a summary of Public/Private Infrastructure required to be constructed or financially guaranteed to be constructed for the above development. This summary is not necessarily a complete listing. During the design process, if the City determines that appurtenant items have not been included in the summary, those items will be included in the listing and related financial guarantee, if the items normally are Subdivider responsibility. In addition, any unforeseen items which arise during construction which are necessary to complete the project and which normally are the Subdivider's responsibility are the responsibility of the Subdivider and will be included in the financial guarantee provided to the City.

RECEIVED OCT 29 1992

UNIT I

SIZE & TYPE OF IMPROVEMENT	LOCATION	FROM	TO	DESCRIPTION
1. PAVING				
A. 32' ~~wide~~ F.F.R.E. residential pavement; standard curb and gutter, or mountable curb and gutter, 4' sidewalk (both sides).	Todos Santos Street	Ouray	130' South of Santa Maria Court	Approximately 750 L.F.

NOTES:

1). Waterlines include valves, fittings and services.
2). Sanitary Sewer lines include manholes and services.
3). Paving items include street lighting. ~~NOT TO BE ENCUMBERED~~
4). Grading and retaining walls do not require financial guarantees, but they must be certified prior to the release of financial guarantees for other items.

SIZE & TYPE OF IMPROVEMENT	LOCATION	FROM	TO	DESCRIPTION
1. PAVING (Continued)				
B. 28' ~~wide~~ F.F. residential pavement; mountable curb and gutter, 4' sidewalk both sides.	Cul-de-sacs (Santo N Tomas Court, Santa Catarina Court, Santa Maria Court)	Cul-de-sac	Todos Santos Street	Approximately 560 L.F.
C. 66' ~~wide~~ FACE TO FACE arterial pavement; mountable curb and gutter, median curb & gutter, 6' sidewalk. (North half of street only)	Ouray Road	260' West of Todos Santos Street	East approximately 570 feet	Approximately 570 L.F.
D. Residential Street Lighting	Per DPM			
E. Street Trees	Ouray Road (NOT TO BE FINANCIALLY GUARANTEED.)			
2. WATER LINES				
A. 8" waterline, including valves, fittings, services and hydrants.	Todos Santos Street	Ouray	130' South of Santa Isabel Ct.	Approximately 750 L.F.
B. 4" waterline, including valves, fittings, services and hydrants.	Cul de Sacs Santo Tomas Court, Santa Catarina, Santa Maria)	West End	Todos Santos	Approximately 560 L.F.

SIZE & TYPE OF IMPROVEMENT	LOCATION	FROM	TO	DESCRIPTION
3. SANITARY SEWER LINES				
A. 8" SAS including service taps and manholes.	Todos Santos Street	130 feet South of Santa Isabel Court	Ouray	Approximately 750 L.F.
B. 8" SAS including service taps and manholes.	Santa Maria Court	West End	Todos Santos	Approximately 200 L.F.
C. 8" SAS including service taps and manholes.	Santa Catarina Court	West End	Todos Santos	Approximately 160 L.F.
D. 8" SAS including service taps and manholes.	Santo Tomas Court	West End	Todos Santos	Approximately 200 L.F.
4. DRAINAGE				
~~A. Earthen detention dike and~~ ditch.	~~Drainage Easement~~ West of Site	~~Ouray~~	~~Vista Alegre~~	~~Approximately 1400 L.F.~~
~~B. 30" storm drain and inlet, including detention basin.~~	~~Drainage Easement West of Site~~	~~Ouray~~	~~100' North~~	
A. ~~B.~~ ~~36"~~ 42" RCP storm drain, including manhole & drop inlets. JJ	Todos Santos	Ouray	North of Santa Catarina Court	Approximately 420 L.F.
B. RCP STORM DRAIN, INCLUDING INLET AND MANHOLES.				
C. REINFORCED CONCRETE OR REINFORCED CONCRETE BLOCK FLOOD WALL	ALONG WEST PROPERTY LINE	150' NORTH OF OURAY	NORTH PROPERTY LINE	

UNIT II

SIZE & TYPE OF IMPROVEMENT	LOCATION	FROM	TO	DESCRIPTION
1. PAVING				
A. 32' wide residential pavement; standard curb and gutter, or mountable curb and gutter, 4' sidewalk both sides.	Todos Santos Street	Vista Alegre	130' South of Santa Isabel Court	Approximately 550 L.F.
B. 28' wide residential pavement; mountable curb and gutter, 4' sidewalk both sides.	Cul-de-sacs (San Francisco Court, Santa Isabel Court)	Cul-de-sac	Todos Santos Street	Approximately 560 L.F.
C. 20' wide arterial pavement; mountable curb and gutter,4' sidewalk. (South half of street only).	Vista Alegre	West Property Line	East approximately 720 feet	Approximately 720 L.F.
D. 4' temporary paving	Vista Alegre	West Property Line	East approximately 720 feet	Approximately 720 L.F.
E. Residential street lighting	Per DPM			
2. WATER LINES				
A. 4" waterline, including valves, fittings, services and hydrants.	Cul-de-sacs (San Francisco Court, Santa Isabel Court)	West End	Todos Santos Street	Approximately 450 L.F.
B. 8" waterline, including valves, fittings, services and hydrants.	Todos Santos	130' South of Santa Isabel Court	San Benito	Approximately 1750 L.F.
C. 10" waterline, including valves, fittings, services and hydrants.	Vista Alegre	West Property Line	East Property Line	Approximately 720 L.F.
D. 10" waterline, including valves, fittings, services and hydrants.	San Benito	Todos Santos	PNM Easement	Approximately 750 L.F.
E. 10" waterline, including valves, fittings, services and hydrants.	PNM Easement	San Benito	Rinconada Channel Easement	Approximately 130 L.F.

SIZE & TYPE OF IMPROVEMENT	LOCATION	FROM	TO	DESCRIPTION
2. WATERLINES (CONT'D)				
F. 10" waterline, including valves, fittings, services and hydrants.	Rinconada Channel Easement	PNM Easement	Unser	Approximately 200 L.F.
3. SANITARY SEWER LINES				
A. 8" SAS including service taps and manholes.	Todos Santos Street	130 feet South of Santa Isabel Court	Vista Alegre	Approximately 550 L.F.
B. 8" SAS including service taps and manholes.	Santa Isabel Court	West End	Todos Santos	Approximately 200 L.F.
C. 8" SAS including service taps and manholes.	San Franciscito Court	West End	Todos Santos	Approximately 250 L.F.
D. 8" SAS including service taps and manholes.	Vista Alegre	East End	~~Todos Santos~~ WEST END	Approximately 600 L.F.
4. DRAINAGE				
A. REINFORCED CONCRETE OR REINFORCED CONCRETE BLOCK FLOOD WALL	ALONG WEST PROPERTY LINE	SOUTH PROPERTY LINE	VISTA ALEGRE	

D.R.B. Case No. 92-0210
D.R.C. Project No. _____
Date Submitted 10/2/92
Submitted By: AVID Engineering, Inc.
By: _____

EXHIBIT "D"
to Subdivision Improvements Agreement

DEVELOPMENT REVIEW BOARD (D.R.B.) REQUIRED INFRASTRUCTURE LISTING for EL RANCHO ATRISCO DE LOS SANTOS REPLAT (LADERA WEST) for PRELIMINARY PLAT APPROVAL

OCTOBER 6, 1992

Approved on 10-6-92, by the Development Review Board

Planning Department	Date 10-6-92
Utility Development Division, City Engineer	Date 10-6-92
Transportation Development Division, Traffic Engineer	Date 10-06-92
Parks and Recreation Department	Date 10/6/92
City Engineer/AMAFCA	Date 10/6/92

DRAINAGE INFORMATION SHEET

PROJECT TITLE: LADERA WEST ZONE ATLAS/DRAINAGE FILE # G-10/D8a

LEGAL DESCRIPTION: EL RANCHO ATRISCO DE LOS SANTOS

CITY ADDRESS: TODOS SANTOS STREET, NORTH OF OURAY

ENGINEERING FIRM: AVID ENGINEERING CONTACT: JIM DOMENICK

ADDRESS: 6100 SEAGULL NE #102 PHONE: 881-5357

OWNER: CURB, INC CONTACT: CHUCK HAEGELIN

ADDRESS: 9806 GREENBRIAR NE PHONE: 821-8718

ARCHITECT: NONE CONTACT:

ADDRESS: PHONE:

SURVEYOR: AVID ENGINEERING CONTACT: RUAN BACIGALUPA

ADDRESS: 6100 SEAGULL NE PHONE: 881-5357

CONTRACTOR: CONTACT:

ADDRESS: PHONE:

RECEIVED AUG 10 1992 HYDROLOGY DIVISION

PRE-DESIGN MEETING:

X YES

___ NO

X COPY OF CONFERENCE RECAP SHEET PROVIDED

DRB NO. DRB-92-0210

EPC NO. Z-92-42

PROJECT NO.

TYPE OF SUBMITTAL:

X DRAINAGE REPORT

___ DRAINAGE PLAN

___ CONCEPTUAL GRADING & DRAIN PLAN

___ GRADING PLAN

___ EROSION CONTROL PLAN

___ ENGINEER'S CERTIFICATION

CHECK TYPE OF APPROVAL SOUGHT:

___ SECTOR PLAN APPROVAL

___ SKETCH PLAT APPROVAL

X PRELIMINARY PLAT APPROVAL

___ SITE DEVELOPMENT PLAN APPROVAL

___ FINAL PLAT APPROVAL

___ BUILDING PERMIT APPROVAL

___ FOUNDATION PERMIT APPROVAL

___ CERTIFICATE OF OCCUPANCY APPROVAL

___ ROUGH GRADING PERMIT APPROVAL

___ GRADING/PAVING PERMIT APPROVAL

___ OTHER _____ (SPECIFY).

DATE SUBMITTED: 8/10/92

BY: Jim Domenick

REV. 10/85

AVID ENGINEERING, INC.

Civil • Structural • Transportation

August 10, 1992

Mr. Gilbert Aldaz, PELS
Public Works Department
City of Albuquerque
P.O. Box 1293
Albuquerque, NM 87103

RECEIVED
AUG 10 1992
HYDROLOGY DIVISION

RE: LADERA WEST (UNITS I AND II) SUBDIVISION. TRANSMITTAL OF DRAINAGE REPORT.

Dear Mr. Aldaz:

Enclosed is the drainage report for Ladera West Subdivision. The report describes the proposed drainage plan for the development of the subdivision, and identifies the drainage infrastructure required.

This subdivision is scheduled for review of the preliminary plat by DRB on September 1, 1992. Also included with this submittal is a copy of the preliminary plat and infrastructure list submitted for review.

Please review the report at your earliest convenience. Do not hesitate to call me if you have questions about the report or if you need any additional information.

Sincerely,

James V. Domenick, P.E.
Principal

Enclosure

cc: Fred Aguirre
Stan Strickman

6100 Seagull St. NE • Suite 102 • Albuquerque, New Mexico 87109 • (505) 881-5357