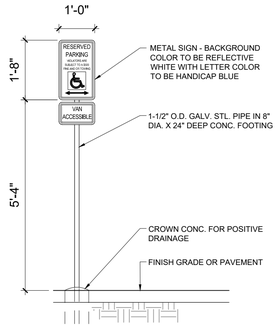

HC SIGN

SCALE: NTS

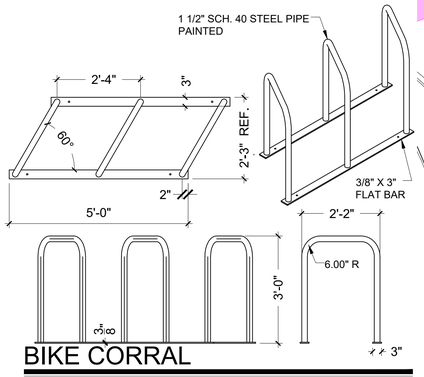

BIKE CORRAL

SCALE: 1/2" = 1'-0"

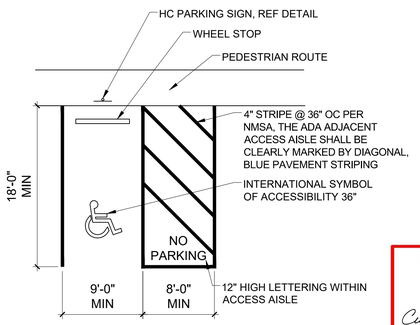

ADA PARKING

SCALE: $\frac{1}{8}$" = 1'-0"

SITE PLAN

SCALE: 1" = 20'-0"

TRAFFIC CIRCULATION LAYOUT APPROVED

Curtis A Cherne — Signed

4-30-24 — Date

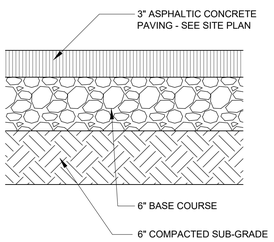

PAVING SECTION

SCALE: NTS

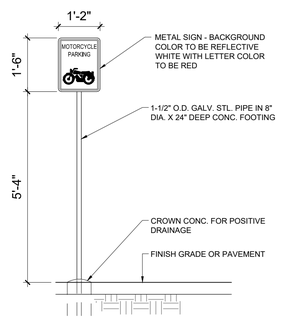

MOTORCYCLE SIGN

SCALE: 1/2" = 1'-0"

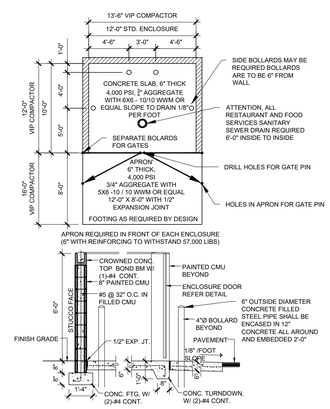

RECYCLING ENCLOSURE

SCALE: 1/8" = 1'-0"

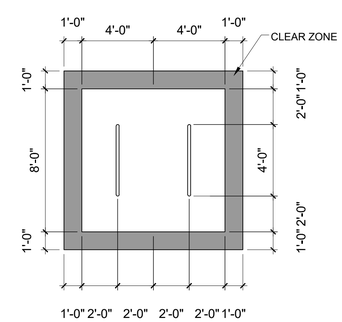

BIKE PARKING

SCALE: 1/4" = 1'-0"

NOTE:

LANDSCAPING, FENCING AND SIGNING WILL NOT INTERFERE WITH CLEAR SIGHT REQUIREMENTS. THEREFORE, SIGNS, WALLS, TREES AND SHRUBBERY BETWEEN 3 AND 8 FEET TALL (AS MEASURED FROM THE GUTTER PAN) WILL NOT BE ACCEPTABLE IN THE CLEAR SIGHT TRIANGLE.

ALL PAVING SHALL BE SHALL BE ASPHALT UNLESS NOTED OTHERWISE, REF. DETAIL THIS SHEET.

ALL MECHANICAL EQUIPMENT SHALL BE SCREENED IN ACCORDANCE WITH IDO SECTION 5-5 (G).

ALL OUTDOOR LIGHT FIXTURES SHALL BE LED. FIXTURES 70 WATTS OR GREATER SHALL BE SHIELDED USING FULL CUTOFF LIGHT FIXTURES.

BUILDING MOUNTED SIGNS SHALL BE EXTERNALLY ILLUMINATED AND SHALL NOT EXTEND MORE THAN 2 FEET ABOVE THE EXTERIOR WALLS OF THE BUILDING.

WORK WITHIN THE PUBLIC RIGHT OF WAY REQUIRES A WORK ORDER.

PROVIDE ELECTRIC VEHICLE CHARGER AT EACH BAY OF LEASED GARAGES

SITE LIGHTING WILL BE PROVIDED BY LIGHT BOLLARDS AND WALL MOUNTED FIXTURES AND SHALL COMPLY WITH 5-8 OF THE IDO

BROKEN OR CRACKED SIDEWALK IS TO BE REPLACED WITH NEW SIDEWALK PER COA STD DRAWING 2430

KEYED NOTES

1. NEW DRIVE CUT REF CITY OF ALBUQUERQUE STANDARD DETAIL 2426 FOLLOW PARALLEL RAMP DETAIL, NOTE DETAIL 2446 FOR DETECTABLE WARNING SURFACE.
2. 6 SPACE BIKE RACK, REF DETAIL THIS SHEET
3. MOTORCYCLE PARKING SIGN REF DETAIL THIS SHEET
4. H.C. PARKING SIGN, REF DETAIL ON THIS SHEET
5. EXISTING FIRE HYDRANT
6. NEW 6' SIDEWALK, 2% MAX CROSS SLOPE, 1.5% PREFERRED CROSS SLOPE, REFERENCE CITY OF ALBUQUERQUE STANDARD DETAIL 2430
7. HC PARKING SYMBOL
8. CURB AND GUTTER, REF COA DETAIL
9. EXISTING PROPERTY LINE
10. VEHICULAR GATE
11. EXISTING POWER POLE. NEW POWER POLES WILL BE AGAINST BACK OF CURB.
12. CLEAR SIGHT TRIANGLE. LANDSCAPING, FENCING AND SIGNING WILL NOT INTERFERE WITH CLEAR SIGHT REQUIREMENTS. THEREFORE, SIGNS, WALLS, TREES AND SHRUBBERY BETWEEN 3 AND 8 FT TALL (AS MEASURED FROM THE GUTTER PAN) WILL NOT BE ACCEPTABLE IN THE CLEAR SIGHT TRIANGLE
13. CURB RAMP, REFERENCE CITY OF ALBUQUERQUE STANDARD DETAIL 2441, NOTE DETAIL 2446 FOR DETECTABLE WARNING SURFACE
14. DRAINAGE EASEMENT
15. UTILITY EASEMENT
16. METAL FENCE
17. OVERHEAD UTILITY LINE
18. REFUSE CONTAINER, REF DETAIL THIS SHEET
19. CURB RAMP, REFERENCE CITY OF ALBUQUERQUE STANDARD DETAIL 2442, DRAWING A
20. CURB RAMP, REFERENCE CITY OF ALBUQUERQUE STANDARD DETAIL 2443, DRAWING A
21. IDO SETBACK LINE
22. APSHALT PAVING
23. NATIVE SOIL COMPACT TO 90%
24. FRONT DOOR
25. PARALLEL RAMP, REFERENCE CITY OF ALBUQUERQUE STANDARD DETAIL 2443

NOTE:
PROPERTY OWNER RESPONSIBLE FOR PLACING RECYCLING AT DESIGNATED COLLECTION POINT ON COLLECTION DAY.

PROPERTY OWNER RESPONSIBLE FOR PLACING REFUSE IN ENCLOSURE ON COLLECTION DAY

CABQ SOLID WASTE DEPARTMENT SHALL HAVE 24HR ACCESS TO THE SITE AND BE PROVIDED WITH KEYPAD GATE CONTROL TO ENTER THE SITE

PARKING:
LIGHT MANUFACTURING: 6,000 SF X 0.001 = 6 SPACES
8 PROVIDED

UPC: 101006016307631101
LEGAL: LOT 1 VOLCANO BUSINESS PARK PHASE I
ZONING: NR-BP
ZONE ATLAS PAGE: G-10
AREA: 1.2749 ACRES

No	Revision Item	Date

SCOTT C. ANDERSON
& associates architects
2818 4th St NW, Suite C Albuquerque NM 87107
scott@sciarchitects.com
505.401.7575

WAREHOUSE
3050 TODOS SANTOS ST NW
ALBUQUERQUE, NM 87120

DRAWING TITLE
SITE PLAN

SEAL: STATE OF NEW MEXICO — SCOTT C. ANDERSON — No. 4341 — 02/08/2024 — REGISTERED ARCHITECT

DESIGNED	PROJECT NO
DRAWN	SCALE
CHECKED	DRAWING NO
REVIEWED	A-100
DATE 02/28/2024	___ OF ___