Global Storage – Coors Blvd. / Sequoia Rd.

(Albuquerque, New Mexico)

Traffic Impact Study

September 15, 2023
FINAL

HT# G11D056
Received 9/15/2023

Terry O. Brown, P.E.
5571 Midway Park Pl. NE
Albuquerque, NM 87109
(505) 883-8807

Ronald R. Bohannan, P.E.
5571 Midway Park Pl. NE
Albuquerque, NM 87109
(505) 883-8807

Presented to:
Matt Grush, P.E.
City of Albuquerque Traffic

Margaret Haynes, P.E.
NMDOT D3

Prepared for:
Mr. Sujay Thakur
1501 University Blvd. NE
Albuquerque, NM 87102

Global Storage
NW corner of Coos Blvd. / Sequoia Rd.
Traffic Impact Study

Executive Summary

Tierra West LLC was contracted by Sujay Thakur to prepare a s Traffic Impact Study (TIS) for the Global Storage (Sombremesa redevelopment) located near the intersection of Coors Blvd and Sequoia Road NW. The purpose of this report is reviewing the impacts of the project on the adjacent transportation system and recommend mitigation measures, where necessary. A traffic scoping meeting was held on March 12, 2023 to review the previous Traffic Impact Study (December 2016) and identify the traffic requirement updates to the redevelopment of this Site. This study is prepared in accordance with the requirements of the City of Albuquerque (COA) and NMDOT District 3 and the scoping letter can be found in Appendix pages A-79 through A-82.

A previous report entitled Sequoia / Coors Retail Development, 2016 made some suggestions and evaluations as a condition of approval of that study to comply with NMDOT requirements on the Driveway "A" access. That study and the subsequent NMDOT requirements called for extension of the existing southbound right-turn deceleration lane for Driveway "A" to meet SAMM criteria. The installation of the extended deceleration lane, Sombremesa Brewery, and RV Park was completed in 2020.

Site Location and Study Area

The proposed Global Storage Development is located northwest of the intersection of Coors Blvd and Sequoia Rd. within the Coors and I-40 Center as highlighted below. Coors Blvd. is under the jurisdiction of the NMDOT and Sequoia Rd. is under the City of Albuquerque evaluation. The development is in the City of Albuquerque, NM and the Vicinity Map can be found below.

The approved scoping letter (included in Appendix Pages A-79 through A-82) required the study area include one intersection listed below (Coors & Sequoia) plus the two existing project access points for the Development as shown on the map below:

1. Coors Blvd. / Access entrance @ Coors Blvd. - Driveway “A” (Unsignalized)
2. Coors Blvd. / Sequoia Rd. (Signalized – fully actuated / coordinated)
3. Coors Blvd. / Access entrance @ Coors Blvd. - Driveway “B” (Unsignalized)

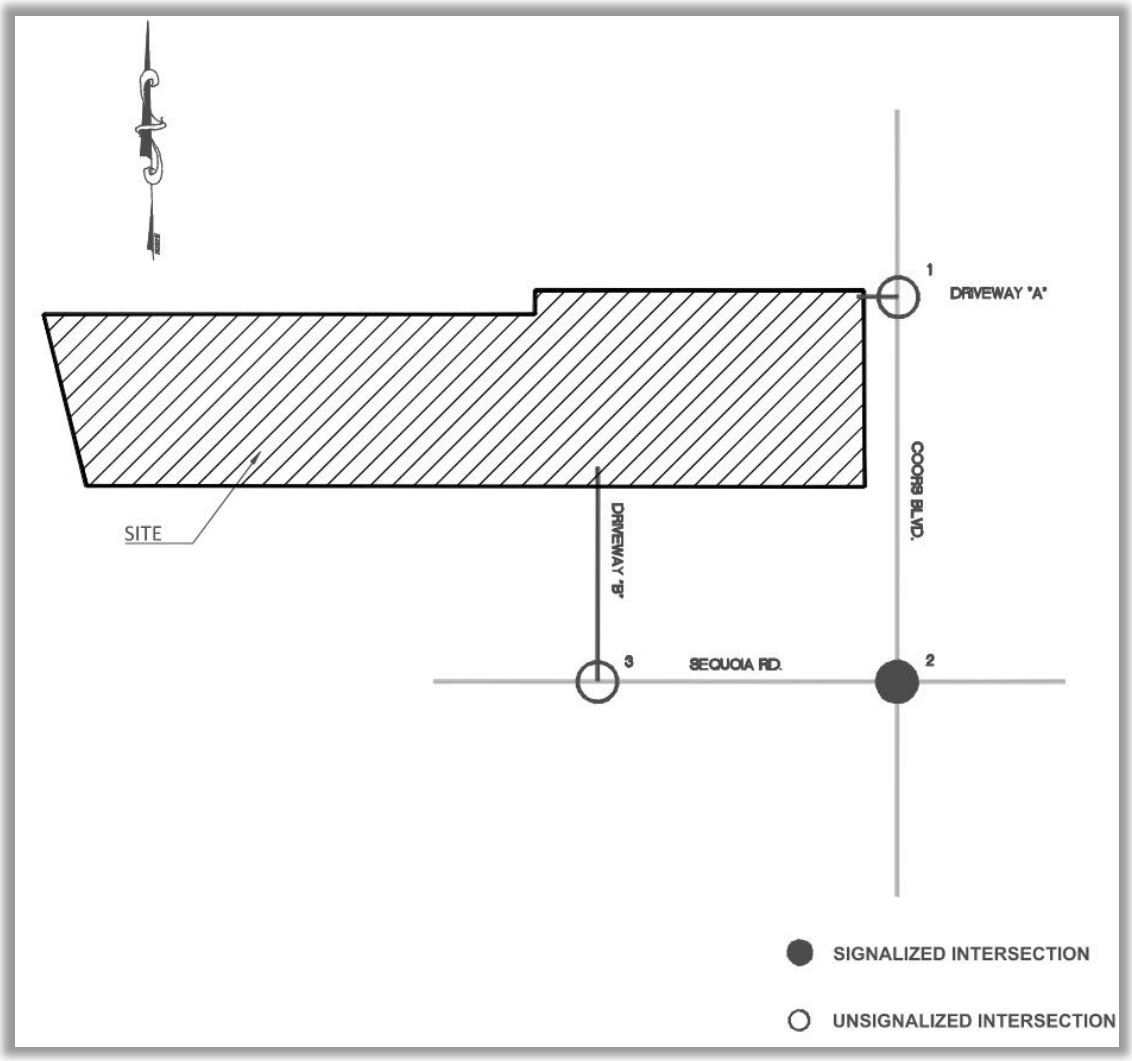

Development Description

The Global Storage Development is a total of 4.04-acres that is to be redeveloped for the proposed 2024 Implementation Year and 2034 for the Horizon Year. The site will generate additional commercial traffic for the existing property. The existing site is currently a Restaurant and RV Park and will be redeveloped into the following:

- 9,900 SF Restaurant (Existing to remain)
- 3,800 SF Brewery Tap Room
- 150 Mini Warehousing for Storage Units

(See the following conceptual site development plan.)

GENERAL NOTES

1. ROOF-TOP MECHANICAL EQUIPMENT SHALL BE SCREENED.
2. THE MECHANICAL SYSTEMS (HEATING & COOLING) AND BUILDING ENVELOPE (WALLS, ROOF, AND WINDOWS) SHALL BE DESIGNED AND MAINTAINED TO PROMOTE THE EFFICIENT USE OF ENERGY
3. RAINWATER HARVESTING MEASURES, SUCH AS CURB CUTS, SHALL BE PROVIDED.
4. PNM COORDINATION: DEVELOPMENT SHALL ABIDE BY ALL CONDITIONS OR TERMS OF UTILITY EASEMENTS PRIOR TO DEVELOPMENT, CONTACT SHALL BE MADE TP PNM'S NEW SERVICE DELIVERY DEPARTMENT TO COORDINATE ELECTRIC SERVICE AND OPTIONS FOR THE LOCATION OF ELECTRIC SERVICE CONNECTION.
5. SCREENING WILL BE DESIGNED TO ALLOW FOR ACCESS TO ELECTRIC UTILITIES. IT IS NECESSARY TO PROVIDE ADEQUATE CLEARANCE OF TEN FEET IN FRONT, AND AT LEAST FIVE FEET ON THE REMAINING THREE SIDES SURROUNDING ALL GROUND-MOUNTED EQUIPMENT FOR SAFE OPERATION, MAINTENANCE AND REPAIR PURPOSED.
6. LANDSCAPING AND SIGNAGE WILL NOT INTERFERE WITH CLEAR SIGHT REQUIREMENTS. THEREFORE, SIGNS, WALLS, TREES, AND SHRUBBERY BETWEEN 3 AND 8 FEET TALL (AS MEASURED FROM THE GUTTER PAN) WILL NOT BE ACCEPTABLE IN THE AREA.
7. ALL SIDEWALKS, RAMPS, (INCLUDING REQUIRED TRUNCATED DOMES), CURB CUTS, AND CURB AND GUTTER LOCATED WITHIN CITY RIGHT-OF-WAY SHALL BE BUILT PER C.O.A. STANDARD DRAWINGS; SIDEWALK (2430), RAMPS (2440), CURB CUTS (2426), BUS SHELTER (2535/02), CURB AND GUTTER (2415A).
8. ALL IMPROVEMENTS LOCATED IN THE RIGHT-OF-WAY MUST BE INCLUDED ON A PUBLIC WORK ORDER.
9. THE PROPOSED AMENDMENTS TO THE SITE PLAN SHALL MEET THE APPLICABLE DEVELOPMENT REQUIREMENTS SET FORTH IN THE INTEGRATED DEVELOPMENT ORDINANCE (IDO), INCLUDING THOSE OF THE COORS BOULEVARD CHARACTER PROTECTION OVERLAY ZONE (CPO-2), IN LIEU OF THE CITY OF ALBUQUERQUE COMPREHENSIVE ZONING CODE, UNDER WHICH THE APPROVED SITE PLAN WAS DEVELOPED.
10. SETBACKS (14-16-3-4(C)(3), LANDSCAPING (14-16-3-4(C)(5)(c), LIGHTING (14-16-3-4(C)(5)(d), BUILDING DESIGN (14-16-3-4(C)(5)(e), PARKING (14-16-5-5 (C)(2), AND SIGNAGE (14-16-3-4(C)(5)(f) SHALL BE GOVERNED BY THE REQUIREMENTS OF THE INTEGRATED DEVELOPMENT ORDINANCE (IDO) AND THE COORS BOULEVARD CHARACTER PROTECTION OVERLAY ZONE (CPO-2)
11. PROPOSED SELF-STORAGE FACILITY SHALL COMPLY WITH APPLICABLE SUBSECTIONS OF IDO SECTION 4-3(D)(29)(A) SELF-STORAGE USE SPECIFIC STANDARD AS FOLLOWS: ALL STORAGE USE SHALL BE WITHIN THE FULLY ENCLOSED PORTION OF THE BUILDING. SECURITY FENCING SHALL NOT INCLUDE RAZOR WIRE OR BARBED WIRE. PUBLIC ACCESS TO THE STORAGE UNITS IS PROHIBITED BETWEEN 10:00 P.M. AND 7:00 A.M. ANY INTERNAL LIGHTING THAT IS VISIBLE FROM THE PROPERTY LINE SHALL BE DIMMED BY 50% OF THE MAXIMUM FOOT LAMBERTS ALLOWED BETWEEN 10:00 P.M. AND 7:00 A.M. ACCESS TO INDIVIDUAL STORAGE UNITS SHALL BE THROUGH INTERIOR CORRIDORS.
12. BUILDING MATERIALS AND DESIGN OF PROPOSED CONSTRUCTION SHALL COMPLY WITH THE APPLICABLE SUBSECTIONS OF CPO-2 - 14-16-3-4(C)(5)(e). MATERIALS CONTRASTING WITH PREDOMINANT COLOR OF THE BUILDING ARE LIMITED TO <10% OF EACH FACADE AREA. REFER TO ELEVATION DRAWINGS.
13. ROOFTOP MECHANICAL EQUIPMENT SHALL BE SCREENED FROM VIEW, PER REQUIREMENTS OF CPO-2.
14. ANY LIGHTING WILL BE PLACED SO AS TO DIRECT LIGHT AWAY FROM RESIDENTIAL DISTRICTS AND WILL BE FULLY SHIELDED TO COMPLY WITH THE NM NIGHT SKY PROTECTION ACT, IDO SECTION 14-16-5-8 OUTDOOR LIGHTING, AND COORS BOULEVARD CPO-2 SECTION 3-4(C)(5)(D) OUTDOOR LIGHTING, WHICH STIPULATES THE MOUNTING HEIGHT OF LIGHT FIXTURES IN OFF-STREET PARKING, OTHER VEHICULAR USE AREAS, AND/OR OUTDOOR STORAGE AREAS SHALL BE NO HIGHER THAN 20 FEET ABOVE FINISHED GRADE.
15. ON-PREMISES SIGNS SHALL COMPLY WITH COORS BOULEVARD CPO-2 SECTION 3-4(C)(5)(F) SIGNS. THE HEIGHT OF BUILDING-MOUNTED SIGNS SHALL COMPLY WITH THE SIGN STANDARDS IN TABLE 5-12-2, BUT NOT EXCEED THE HEIGHT OF THE BUILDING. PER THE NR-C ZONE & CPO-2, THE MAXIMUM SIGN AREA FOR BUILDING MOUNTED SIGNS SHALL NOT EXCEED 15% OF THE FAÇADE AREA OR 75SF, INCLUSIVE OF DOOR AND WINDOW OPENINGS. REFER TO ELEVATION DRAWINGS.
16. SIDEWALK SLOPES SHALL NOT EXCEED 5%, CROSS SLOPES NOT TO EXCEED 2%. SHOULD SLOPES EXCEED 5%, WALK WILL BE CONSIDERED A RAMP AND BE REQUIRED TO HAVE HANDRAILS ON EACH SIDE AS WELL AS LEVEL LANDINGS AT THE TOP AND BOTTOM OF RAMP FOR A DISTANCE OF 60' BEYOND THE EXTENT OF THE RAMP.
17. ALL SERVICE AREAS SHALL BE SCREENED TO CONCEAL TRASH CONTAINERS, GAS METERS, TRANSFORMERS, BACKFLOW PREVENTERS AND OTHER MECHANICAL OR ELECTRICAL EQUIPMENT FROM EYE LEVEL ADJACENT TO ALL PUBLIC STREETS
18. OWNER IS TO PROVIDE 8YD. WASTE RECEPTACLE AT EXISTING WASTE ENCLOSURE TO HANDLE ADDITIONAL WASTE STREAMS OF PHASE 2 - INDOOR STORAGE FACILITY AND PHASE 3 - BREWERY EXPANSION IF SO REQUIRED BY SOLID WASTE DEPARTMENT.
19. FREE AND CLEAR ACCESS TO WASTE ENCLOSURE TO BE MAINTAINED AT ALL TIMES. PROPOSED SCOPE OF PHASE 2 & PHASE 3 CONSTRUCTION SHALL NOT INTERFERE OR MATERIALLY ALTER ACCESS TO EXISTING ENCLOSURE, PER SOLID WASTE DEPARTMENT.
20. MAJOR AMENDMENT (3/20/2023): REPLACE RV STORAGE AREA AND THE 40,000SF INDOOR STORAGE FACILITY WITH A 150,000SF INDOOR STORAGE FACILITY (PHASE 2) AND A 3,800SF EXPANSION TO EXISTING BREWERY (PHASE 3). EGRESS TO ATRISCO RD. NW MOVED NORTH AND IS MODIFIED FOR EXIT ONLY.

SYMBOL LEGEND

- PARKING BAY COUNT
- ACCESSIBLE PARKING SPACE
- ELECTRICAL TRANSFORMER
- FDC CONNECTION POINT
- FIRE HYDRANT
- POLE MOUNTED EXTERIOR LIGHTING
- CONCRETE PAVING
- PAINTED STRIPING
- EASEMENT LINE
- SETBACK LINE
- PROPERTY LINE
- FENCE LINE
- CONCRETE CONTROL JOINT
- FIRE LANE MARKINGS
- EXISTING CONSTRUCTION
- CLEAR SIGHT TRIANGLE

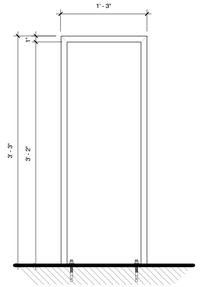

BIKE RACK — BASIS OF DESIGN, MADRAX METRO, ANCHOR MOUNTED INSTALLATION.

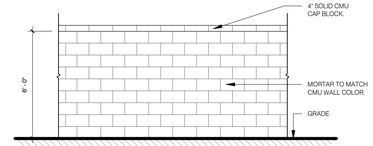

6' CMU BLOCK PERIMETER WALL — 8" X 8" X 16" SPLIT FACE, RUNNING BOND, CMU PERIMETER WALL. MATCH EXISTING.

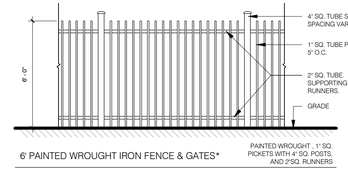

6' PAINTED WROUGHT IRON FENCE & GATES* — PAINTED WROUGHT , 1" SQ. PICKETS WITH 4" SQ. POSTS, AND 2"SQ. RUNNERS

*FENCING TYP. INTERNAL TO PROPERTY AND AT VEHICLE EXIT GATE

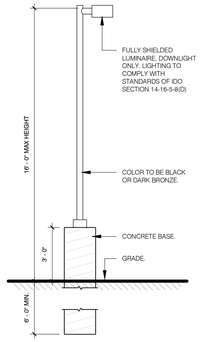

POLE MOUNTED LIGHT FIXTURE

PERMIT REVIEW APPROVALS

SHEET NOTES:

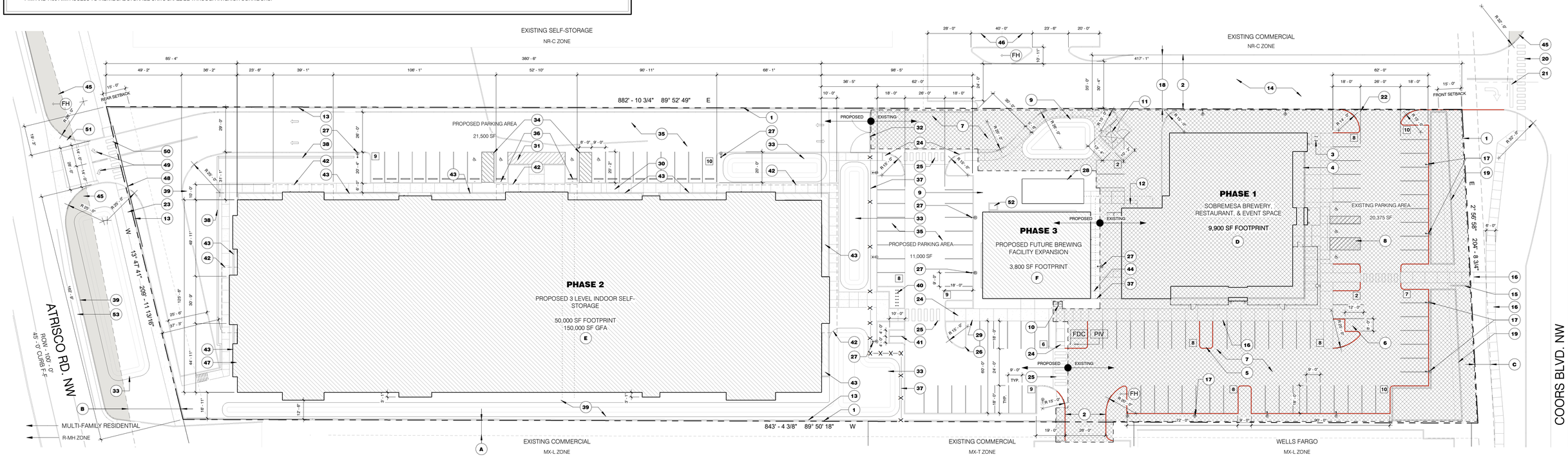

1 / AS.1 SITE PLAN - MAJOR AMENDMENT
1" = 30'-0"

0 15' 30' 60' 120'

PROPERTY INFORMATION

3421 COORS BLVD. NW - ALBUQUERQUE, NM 87120

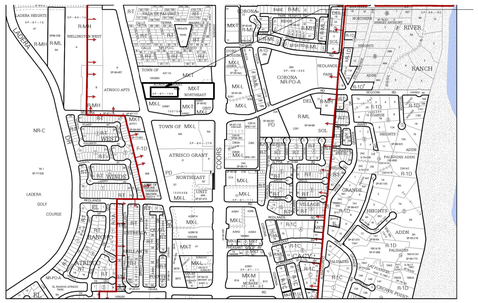

LOCATION MAP — ZONE ATLAS PAGE G-11-Z (MAY 2018)

0 250 500 1000

PROPOSED PROJECT LOCATION

LEGAL DESCRIPTION	TR A-36-A - TOWN OF ATRISCO GRANT - NE UNIT
LOT SIZE	SITE AREA: 4.04 ACRES (176,180 SF)
PROPERTY ADDRESS	3421 COORS BLVD. NW ALBUQUERQUE, NM 87120
ZONING	NR-C - NON-RESIDENTIAL COMMERCIAL ZONE
LAND USE	INDOOR STORAGE FACILITY, RV STORAGE, MULTI-TENANT OFFICE / COMMERCIAL BUILDING CONDITIONAL USES FOR RESTAURANT, TAPROOM, AND BREWERY, APPROVED BY THE CITY ZONING HEARING EXAMINER ON MARCH 19, 2019 (VA-2018-00228; VA-2018-009125) ALL PROPOSED USES COMPLY WITH ABOVE APPROVALS AND LAND USE DESIGNATIONS
UPC #	10110619520231002
TRANSIT	SITE EXISTS WITHIN THE COORS / I40 ACTIVITY CENTER AND ALONG A MAJOR TRANSIT CORRIDOR.
BUS ROUTES	96 (CROSSTOWN COMMUTER), 155 (COORS) , AND 790 (BLUE LINE RAPID RIDE). SOUTHBOUND BUS STOPS FOR ROUTES 96, 155, AND 790 ARE LOCATED APPROXIMATELY 450' TO THE SOUTH OF THE SITE. NORTHBOUND BUS STOPS FOR ROUTES 96 AND 155 ARE LOCATED ACROSS COORS BLVD APPROXIMATELY 590' TO THE NORTH OF THE SITE.
LIGHTING	LIGHTING SHALL BE FULLY SHIELDED AND CONSISTENT WITH THE COORS CORRIDOR PLAN LIGHTING REGULATIONS. THE HEIGHT OF POLE MOUNTED LIGHTS WILL NOT EXCEED 20'-0" FROM THE GRADE OF PARKING LOT.

PARKING REQUIREMENTS

PROPOSED, PER IDO 14-16-5-5-1

PARKING REQUIREMENTS

- CLUB OR EVENT FACILITY: 1 SPACE/4 SEATS IN MAIN ASSEMBLY AREA = **38 SPACES**
- RESTAURANT/TAPROOM: 8 SPACES/1,000 SF GFA = **48 SPACES**
- ARTISAN MANUFACTURING: 1 SPACE/1,000 SF GFA = **5 SPACES**
- SELF STORAGE: 1 SPACE/3,000 SF GFA = **50 SPACES**
- MINIMUM TOTAL PARKING REQUIRED = **141 SPACES**
- 20% ACTIVITY CENTER PARKING REDUCTION = **28 SPACES**
- 10% REDUCTION FOR BEING WITHIN 330 FEET OF A TRANSIT STOP = **14 SPACES**
- MINIMUM TOTAL PARKING REQUIRED WITH REDUCTIONS APPLIED: **99 SPACES**
- PARKING SPACES PROVIDED: **114 SPACES**
- ADA/HC PARKING SPACES REQUIRED/PROVIDED: **5/7**
- MOTORCYCLE PARKING REQUIRED/PROVIDED: **4/4**
- B/CYCLE SPACES REQUIRED/PROVIDED: **10/14**

KEY NOTES

1. PROPERTY BOUNDARY
2. EXISTING CURB AND GUTTER TO REMAIN.
3. EXISTING BIKE RACKS
4. LINE OF EXISTING ROOF OVERHANG ABOVE
5. EXISTING FIRE LANE MARKINGS
6. EXISTING MOTORCYCLE PARKING
7. EXISTING ASPHALT PAVED DRIVE AISLE AND VEHICLE PARKING
8. EXISTING VAN ACCESSIBLE ADA PARKING
9. EXISTING GRAVEL GROUND COVER
10. EXISTING ELECTRICAL TRANSFORMER.
11. EXISTING TRASH ENCLOSURE USED BY EXISTING BREWERY & RESTAURANT,AND TO BE USED BY PHASE 2 STORAGE FACILITY, AND PHASE 3 BREWERY EXPANSION
12. EXISTING ELECTRICAL PANELS AND BOLLARD.
13. EXISTING 6'-0"H SPLIT FACE CMU PERIMETER WALL. 60' PORTION ALONG WEST ELEVATION TO BE DEMOLISHED AND ADDITIONAL 60' PORTION TO BE FILLED IN DURING PHASE 2 WORK.
14. EXISTING 35'-0" W SHARED ACCESS R.O.W.
15. EXISTING MONUMENT SIGN
16. EXISTING 6'-0" CONCRETE SIDEWALK
17. EXISTING 16'-0"H POLE MOUNTED LIGHTING
18. EXISTING SHARED SITE ACCESS LANE
19. EXISTING FENCED CONCRETE RETENTION BASINS
20. EXISTING CROSSWALK STRIPING.
21. EXISTING TRAFFIC MARKINGS.
22. HATCHED AREA INDICATES EXTENTS OF PHASE 1, EXISTING 9,900SF BREWERY & RESTAURANT DEVELOPMENT
23. EXISTING 6'W CONCRETE SIDEWALK, WITH NEW PORTION OF SIDEWALK AT LOCATION OF DEMOLISHED PHASE I DRIVE AISLE.
24. NEW ADA RAMP WITH TACTILE WARNING STRIP AT LOW SIDE
25. NEW ACCESSIBLE PEDESTRIAN CROSSING. CROSSWALK MARKINGS TO MEET CABQ STANDARD
26. NEW CONCRETE CURB AND GUTTER. SEE GENERAL NOTES
27. NEW POLE LIGHTING ON CONCRETE BASE. SEE GENERAL NOTES
28. NEW WALK-IN COOLER. APPROX.600SF. REFER TO ELEVATIONS.
29. NEW 8'-6"W CONCRETE SIDEWALK
30. NEW 6'-0"W CONCRETE SIDEWALK
31. NEW STRIPED 5 MIN. LOADING / UNLOADING ZONE
32. NEW 28'-0" W SWINGING VEHICULAR ACCESS GATE WITH FDC ACCESS OVERRIDE

KEY NOTES

33. PROPOSED PONDING AREA. REFER TO CIVIL GRADING AND DRAINAGE PLAN.
34. NEW VAN ACCESSIBLE ADA PARKING
35. NEW ASPHALT PAVED DRIVE AISLE AND VEHICLE PARKING
36. STANDARD ADA SIGNAGE AT ACCESSIBLE PARKING SPACES, TYP.
37. NEW 6'-0"H METAL SECURITY FENCE WITH PEDESTRIAN ACCESS GATES.
38. NEW CMU RETAINING WALL. FINAL HEIGHT BY CIVIL, NOT TO EXCEED 6'-0"H
39. PROPOSED LANDSCAPE BUFFER. SEE LANDSCAPE CALCULATIONS & LANDSCAPE PLAN
40. NEW BIKE RACKS
41. NEW MOTORCYCLE PARKING
42. PROPOSED CANOPY OVERHANG AT BUILDING ENTRANCE AND EGRESS DOORS.
43. RAISED SPLIT FACE CMU PLANTER BED AT STRUCTURE, TO MATCH EXISTING PHASE 1 PERIMETER WALL.
44. NEW 10'-0"W CONCRETE SIDEWALK
45. CLEAR SIGHT TRIANGLE, PER DPM REQUIREMENTS. LANDSCAPE & SIGNAGE WILL NOT INTERFERE WITH CLEAR SIGHT REQUIREMENTS.
46. PARKING AREA AT ADJACENT BUSINESS
47. PROPOSED ILLUMINATED BUSINESS WALL SIGNAGE. TO COMPLY WITH REQUIREMENTS OF IDO TABLE 5-12-2 - SEE SIGNAGE CALCULATIONS, THIS SHEET
48. POWERED 6'H ROLLING GATE W/ FIRE DEPT. EMERGENCY OVERRIDE.
49. LEFT / RIGHT PAINTED DIRECTIONAL TURN ARROWS, PER CABQ STANDARDS. NO ENTRY TO SITE FROM ATRISCO, EXIT ONLY.
50. PROPOSED CROSSWALK STRIPING AT NEW DRIVE AISLE.
51. PROPOSED LOCATION OF RELOCATED, EXIT ONLY DRIVE AISLE.
52. GROUND MOUNTED PACKAGED MECHANICAL UNIT
53. 6'W BIKE LANE, MODIFY STRIPING AT NEW VEHICLE EXIT DRIVE.

A EXISTING 10' UNDERGROUND PNM EASEMENT
B EXISTING 50' PNM EASEMENT
C EXISTING 10' PNM & MOUNTAIN BELL EASEMENT
D PHASE 1 SCOPE - EXISTING 9,900 SF BREWING FACILITY AND RESTAURANT, ASSOCIATED PARKING, SITE INFRASTRUCTURE AND LANDSCAPING
E PHASE 2 SCOPE - PROPOSED 3 LEVEL150,000 SF INDOOR CLIMATE CONTROLLED STORAGE, ASSOCIATED PARKING, SITE INFRASTRUCTURE, LANDSCAPING, AND CONCRETE FLATWORK. SEE ELEVATIONS.
F PHASE 3 SCOPE - PROPOSED 3,800 SF BREWING FACILITY EXPANSION AND ASSOCIATED SITE INFRASTRUCTURE INCLUDING: BREWERY BUILDING & NEW 8'W ACCESS SIDEWALKS - ALL PARKING REQUIREMENTS MET OR EXCEEDED BY PHASE 2 WORK. SEE ELEVATIONS.

SITE PLAN AMENDMENT MAJOR - SIGNATURES:

PROJECT NUMBER: *PR-2018-001192*

APPLICATION CASE NUMBER: *SI-2023-00512*

THIS PLAN IS CONSISTENT WITH THE SPECIFIC SITE DEVELOPMENT PLAN APPROVED BY THE ENVIRONMENTAL PLANNING COMMISSION (EPC), DATED 4/20/2023 AND THE FINDINGS AND CONDITIONS IN THE OFFICIAL NOTIFICATION OF DECISION ARE SATISFIED.

INFRASTRUCTURE LIST REQUIRED: ( ) YES, (**X**) NO

IF YES, THEN A SET OF APPROVED DRC PLANS WITH A WORK ORDER FOR ANY CONSTRUCTION WITHIN PUBLIC RIGHT OF WAY OR FOR CONSTRUCTION OF PUBLIC IMPROVEMENTS.

DFT SITE DEVELOPMENT PLAN APPROVAL:

TRANSPORTATION DIVISION	DATE:
WATER AUTHORITY (ABCWUA)	DATE:
PARKS & RECREATION DEPARTMENT	DATE:
HYDROLOGY	DATE:
CODE ENFORCEMENT	DATE:
**ENVIRONMENTAL HEALTH DEPARTMENT (CONDITIONAL)*	DATE:
SOLID WASTE MANAGEMENT	DATE:
PLANNING DEPARTMENT	DATE:

REVISIONS:

Revision #	Revision Description	Revision Date

STATE OF NEW MEXICO — CHRISTOPHER ERIC BECCONE — No. 5078 — 01 May 2023 — REGISTERED ARCHITECT

GLOBAL STORAGE - COORS
3421 COORS BLVD. NW
Albuquerque, NM 87120

MODULUS DESIGN LLC.
912 Broadway Blvd. NE
Albuquerque, NM 87102

P 505.842.0354
F 505.243.3669

AS.1

SITE PLAN - 3421 COORS - MAJOR AMENDMENT

PHASE: PLANNING & ZONING

The project should be completed and implemented in 2024 with a Horizon Year of 2034. The development consists of storage units, a high turnover sit-down restaurant and a brewery. According to the Institute of Traffic Engineers' trip generation rates for the proposed Global Storage Development, the commercial trips were calculated using data for Mini-Warehousing (ITE Code 151), High Turnover (sit-down) Restaurant (ITE Code 932), and a brewery Tap Room (971). The proposed development for trips was then subtracted from the existing trips generated from the site base on High Turnover (sit-down) Restaurant (ITE Code 932) and RV Park (ITE Code 416). Generated trips for the commercial development can be found below.

Global Storage (Coors / Sequoia)

Trip Generation Data (ITE Trip Generation Manual - 11th Edition)

USE (ITE CODE)		24 HR VOL	A. M. PEAK HR.		P. M. PEAK HR.	
DESCRIPTION		*GROSS*	*ENTER*	*EXIT*	*ENTER*	*EXIT*
Summary Sheet	Units					
Mini-Warehousing (151)	150.00	218	8	6	11	12
High Turnover (Sit-Down) Restaurant (932)	9.90	1,061	52	43	55	35
Brewery Tap Room (971)	3.80	234	2	-	22	15
Subotal - Total Project (Including Existing uses)		1,513	62	49	88	62
Campground / RV Park (416)	2.20	-	-	1	1	1
High Turnover (Sit-Down) Restaurant (932)	9.80	1,051	52	42	54	35
Subtotal - Existing Uses		1,051	52	43	55	36
New Trips		**462**	**10**	**6**	**33**	**26**

Background traffic volumes were calculated by applying historical annual background traffic growth rates to the existing traffic volumes for the implementation year. **Existing traffic Demand Volumes** were collected during early May of 2023 while school was in session. Summarized Volumes can be found in Appendix A-76 through A-78.

The results of the Implementation Year (2024) and Horizon Yeah (2034) AM and PM Peak Hour NO BUILD AND BUILD Conditions are summarized in the following table:

Driveway B is on Sequoia not Coors

Executive Summary Results Table

Global Storage Development - Coors Blvd. / Sequoia Rd., Abq. NM

				2024 Conditions		2034 Conditions	
				Level of Service (LOS) - Delay (s/vehicle)			
	Intersection No. / Name	Signalization	Case	AM Peak	PM Peak	AM Peak	PM Peak
Single Period Analysis Using Synchro 11	1 - Coors Blvd. / Driveway "A"	Unsignalized	NO BUILD	E - 46.8	D - 30.1	F - 58.6	E - 35.4
			BUILD	E - 47.3	D - 30.7	F - 59.4	E - 36.2
	3 - Coors Blvd. / Driveway "B"	Unsignalized	NO BUILD	B - 11.0	B - 11.0	B - 11.3	B - 11.7
			BUILD	B - 10.9	B - 11.5	B - 11.3	B - 11.8
Single Period Analysis HCS7	2 - Coors Blvd. / Sequoia Rd.	Signalized	NO BUILD	B - 18.0	C - 21.0	C - 21.9	C - 25.2
			BUILD	B - 18.5	C - 22.0	C - 23.7	C - 26.6

The intersection of Coors and Sequoia was analyzed with a Single Period Analysis. The analysis did not result in any turning movement with a Volume to Capacity (V/C) Ratio greater than 0.99. Therefore, a Multi-Period Analysis is not required.

A Single Period Analysis evaluates the Peak Hour Volume whereas a Multi-Period Analysis evaluates the Peak Period in 15min increments.

A summary of the impacts and recommendations based on the results of Traffic Impact Study can be found on the following page.

Summary of Impacts and Recommendations

The project will not have impacts which raises to providing mitigations. The signalized intersection of Coors and Sequoia Rd. analyzed using HCS for a single period analysis identified that all movements at this intersection had Volume to Capacity Rations (V/C's) less than 1 which did not require a multi-period analysis. A single period analysis was conducted on the remaining unsignalized Driveways ("A" and "B") using Synchro 11 (Build 11.1.2.9) modeling software. See Appendix pages A-57 through A-59 for detailed results of the analysis.

In general, the operations of the intersection and driveways analyzed for Global Storage identified no areas of concern that are caused by the redevelopment of Sombremesa. The overall intersection LOS for the signalized intersection of Sequoia Rd. / Coors Blvd. resulted in a Level-of-Service D or better. The LOS at the two existing driveways is not significantly impacted by the new development and is considered marginally acceptable in urban areas.

Mitigations and Recommendations Summary

Global Storage Development - Coors Blvd. / Sequoia Rd., Albuquerque, NM

Intersection	Mitigation	Intersection Recommendations	Deceleration Lane Warrants
1 - Coors Blvd / Driveway "A"	There are no Mitigations at this Intersection	There are no Recommendations at this Intersection.	There are no Deceleration Warrants at this Intersection.
2 - Coors Blvd / Sequoia Rd.	There are no Mitigations at this Intersection	There are no Recommendations at this Intersection.	There are no Deceleration Warrants at this Intersection.
3 - Coors Blvd / Driveway "B"	There are no Mitigations at this Intersection	There are no Recommendations at this Intersection.	There are no Deceleration Warrants at this Intersection.

In summary, the proposed Global Storage Development will have a no significant adverse impact on the adjacent transportation system. There are no recommendations in this report to improve the overall network and the access is acceptable to and from the proposed Development.

Global Storage
NW corner of Coos Blvd. / Sequoia Rd.
Traffic Impact Study

Table of Contents

Executive Summary 1
Site Location and Study Area 1
Development Description 2
Summary of Impacts and Recommendations 6
Introduction 1
Description of Proposed Development 1
Land use and Intensity 1
Development Phasing and Timing 2
Existing and Planned Zoning 2
Site Access 2
Study Area Conditions 3
Study Area Definition 3
Existing Land Use 4
Other Planned or Approved Development and Transportation Improvements 4
Existing Roadway System 4
Analysis of Existing Conditions 6
Existing Traffic Volumes 7
Existing Signal Phasing 7
Level of Service (LOS) 7
Analysis of Implementation Year Conditions 8
Traffic Projections 8
Background Traffic 8
Trip Generation 8
Trip Distribution and Trip Assignments 9
NO BUILD and BUILD Traffic Volumes 14
Traffic Analysis 18
#1 – Coors Blvd. / Driveway “A” – Unsignalized 20
#2 – Coors Blvd. / Sequoia Rd. – Signalized 22
#3 – Coors Blvd. / Driveway “B” – Unsignalized 24
Determination of Warrants for Deceleration Lanes 25
Summary of Impacts 26
Summary of Recommendations 27

APPENDICES.....28

Global Storage
NW corner of Coos Blvd. / Sequoia Rd.
Traffic Impact Study

Introduction

The purpose of this Traffic Impact Study (TIS) is to evaluate the transportation conditions before and after implementation of the Global Storage (Sombremesa redevelopment) to determine the impact of the site on the adjacent transportation system and recommend mitigation measures where necessary. This study is prepared in accordance with the requirements of the City of Albuquerque (COA) and NMDOT District 3. The Site address is 3421 Coors Blvd. NW, Albuquerque, NM 87120. The City of Albuquerque scoping letter for this TIS is in Appendix pages A-79 through A-82.

Description of Proposed Development

The proposed Global Storage Development is located northwest of the intersection of Coors Blvd. and Sequoia Rd. within the Coors and I-40 Center. See Albuquerque's GIS Map below:

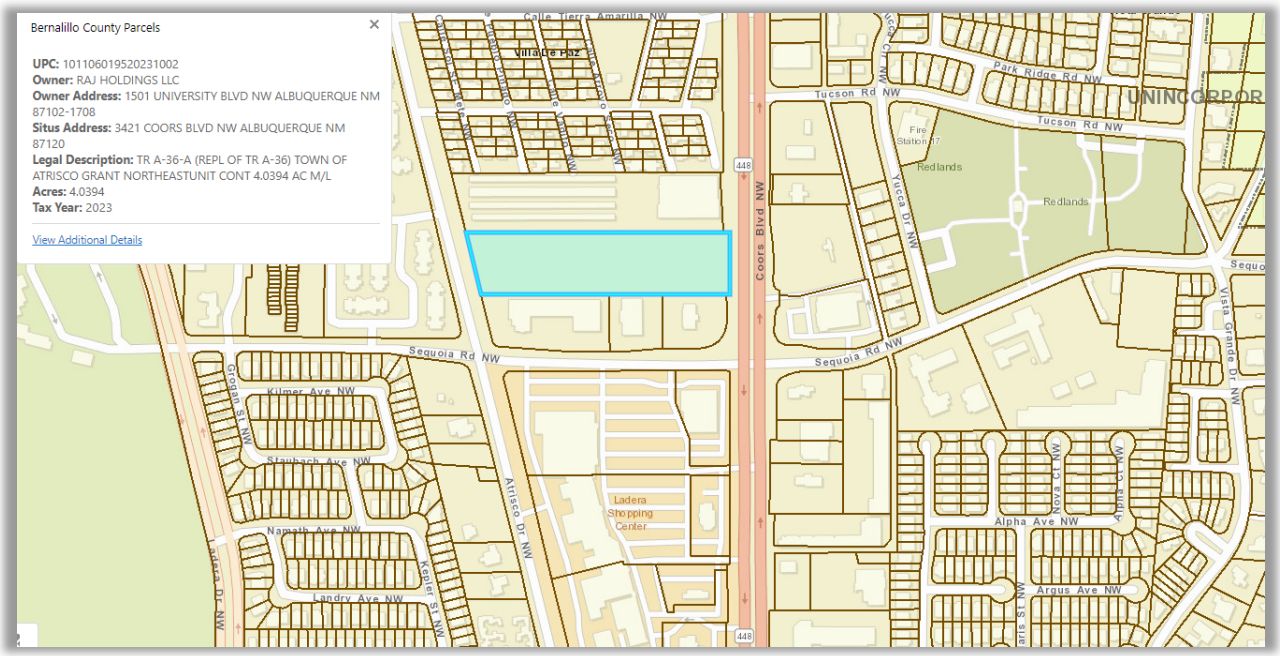

Land use and Intensity

The proposed redevelopment is located at 3421 Coors Blvd. NW, comprised of 4.04 acres in total. The legal description is Tract A-36-A which was a replat of Tract A-36. The existing land for the project was initially developed as a restaurant and RV Park that fronts the Coors Blvd., an Arterial Roadway. A Traffic Impact Study was prepared, reviewed by the City of Albuquerque and the NM DOT, and approved in 2016. The approval is more than 5 years old, so a new study is required for this redevelopment. The west portion of the site is to be redeveloped as an indoor self-storage and the center portion as an additional Tap Room.

Development Phasing and Timing

The proposed Global Storage Development will be constructed in two phases. Phase one was initially going to be the expanded Restaurant, but with the updated site plan, the existing restaurant building is to remain as is. Phase two (which is technically now Phase one of the proposed redevelopment) consists of the 3,800 s.f. Tap Room Facility. Phase three (which is now phase two of the proposed development since phase one has been eliminated) consists of the three-story indoor, self-storage building consisting of 150,000 GFA. The timing of the phases will be constructed concurrently with each other. Therefore, this study will consider the development of the entire project as one phase.

Existing and Planned Zoning

The identified zoning for the existing and proposed Global Storage, as stated in the Planning and Zoning Code for the City of Albuquerque (COA), is NX-C. The Integrated Development Ordinances (IDO) references Global Storage on the COA GIS database as Non-Residential. The IDO categorizes permissive uses of a Restaurant, Tap Room, and Self-Storage according to Table 4-2-1: Allowable Uses. You can view the COA GIS map for zoning below:

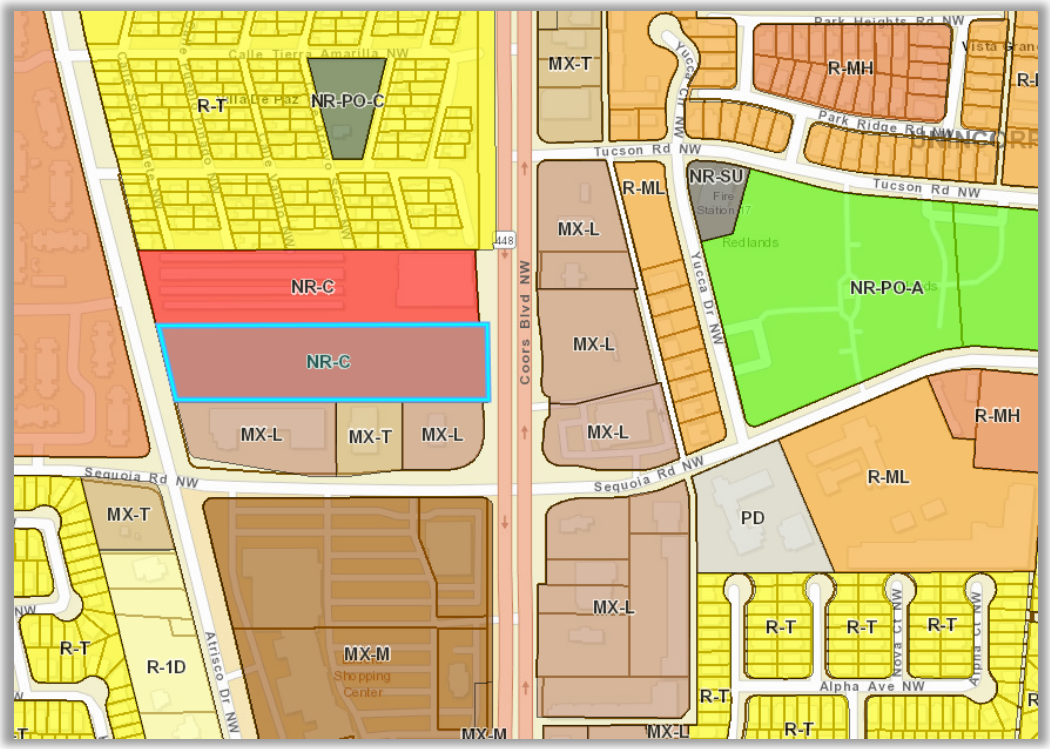

Site Access

Two existing access Driveways (Driveway “A” and Driveway “B”) are currently functioning access driveways for the existing and proposed development. Driveway “A” is currently a right-in/right-out access point located 450-feet north of Coors Blvd. and Sequoia Rd. (centerline to centerline). Driveway “B” is currently a full-access Driveway and is located 350-feet west of Coors Blvd. and Sequoia Rd. (centerline to centerline). See the existing site access driveways on the following page 3.

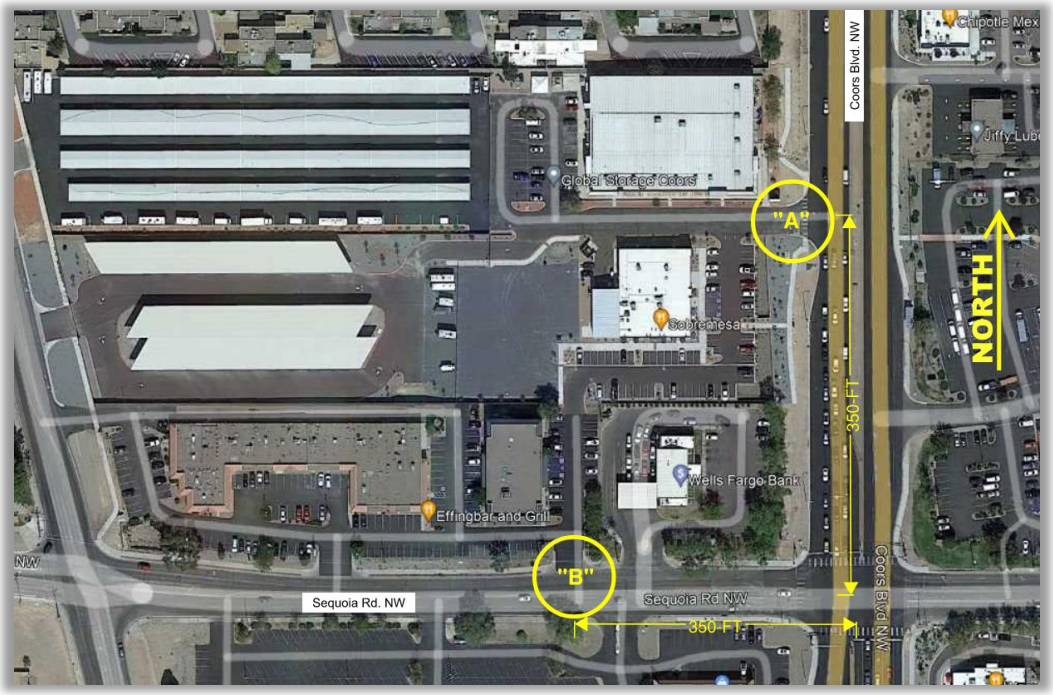

Study Area Conditions

Study Area Definition

A traffic scoping meeting was held on March 12, 2023. The attendees included Margret Haynes P.E., Matt Grush P.E. (COA), Ronald R. Bohannan, P.E., Terry Brown P.E., Amanda Herrera, P.E., and Derek Bohannon (Tierra West LLC.). At the Scoping Meeting, it was determined that a new Traffic Impact Study would be required since the previous Traffic Impact Study for this project is more than 5 years old, and that the study area for the TIS would include the one intersection listed below plus the project access points (2) for the Development and shown on the following Map, next page:

1. Coors Blvd. / Access entrance @ Coors Blvd. - Driveway “A” (Unsignalized)
2. Coors Blvd. / Sequoia Rd. (Signalized – fully actuated coordinated)
3. Coors Blvd. / Access entrance @ Coors Blvd. - Driveway “B” (Unsignalized)

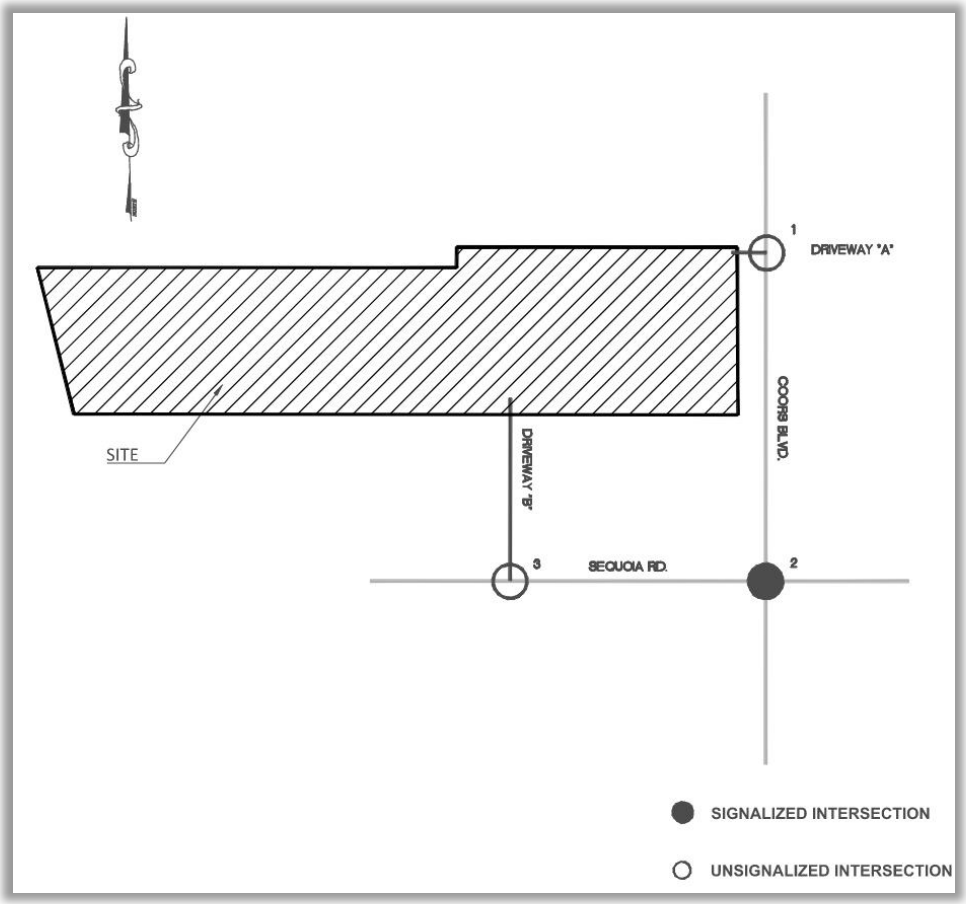

Existing Land Use

The land is currently developed with a Restaurant and RV Storage, and the study area is mostly developed with landscaping.

Other Planned or Approved Development and Transportation Improvements

There are two previous transportation projects in the area that were included in the Global Storage Development TIS. The first proposed project is the Coors Pavilion Development located at the NW corner of Coors Blvd. and St Joseph's Dr. The second project to be included in the study is the Proposed Oxbow Development (also called Coors Pavilion South) located at the SW corner of Coors Blvd and St Joseph's Dr.

Existing Roadway System

Coors Blvd. is classified as a Regional Principal Arterial Roadway on the Futures 2040 Long Range Roadway System Map. It is a constructed six-lane divided roadway with a 20-ft raised median and a posted speed limit of 45-MPH. The signals along Coors Blvd. are part of an actuated-coordinated signal system that stretches north and south along the corridor. There are existing sidewalks that run north and south on both east and west sides of Coors Blvd. See Portion of Futures 2040 Long Range Roadway System Map on Page 5.

Sequoia Rd. is classified as a Major Collector on the on the Futures 2040 Long Range Roadway System Map. It is a constructed four-lane undivided roadway and has a posted speed limit of 30-MPH. There are existing sidewalks that run east and west on the north and south sides of Sequoia Rd.

Alternative Travel Modes

There are no Primary Transit Routes in the area of analysis along Coors Blvd. or Sequoia Rd. ABQ Rapid Ride does have the following Bus Stops in the very near vicinity of the proposed development. They include Rapid Ride 96, 155, and 790.

Coors Blvd. and Sequoia Rd are currently equipped with bicycle facilities. Coors Blvd. is currently a planned Protected Bike Lane for future bicycle facilities according to the Futures 2040 Long Range Bikeway System Map. See MRCOG Bike Map on page 6.

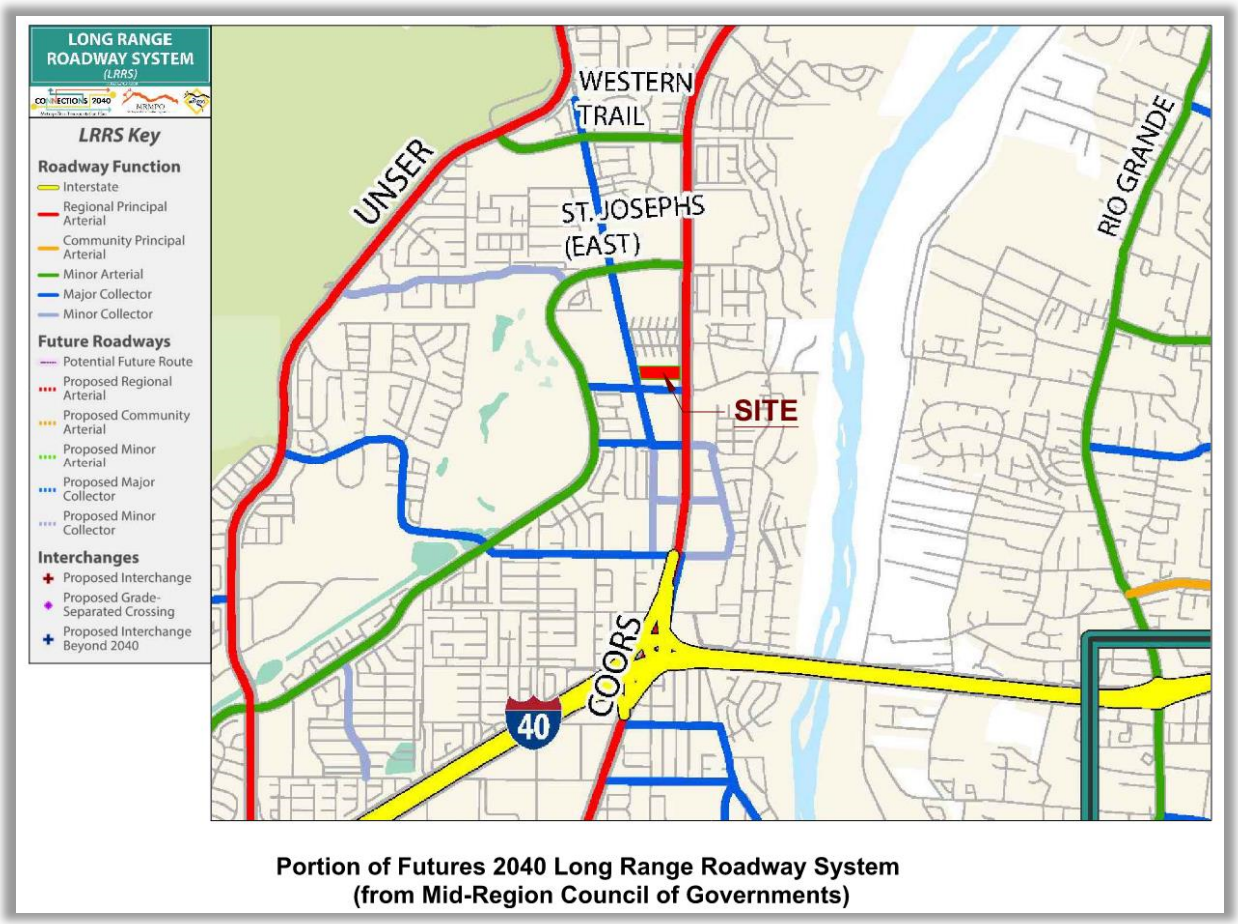

Portion of Futures 2040 Long Range Roadway System (from Mid-Region Council of Governments)

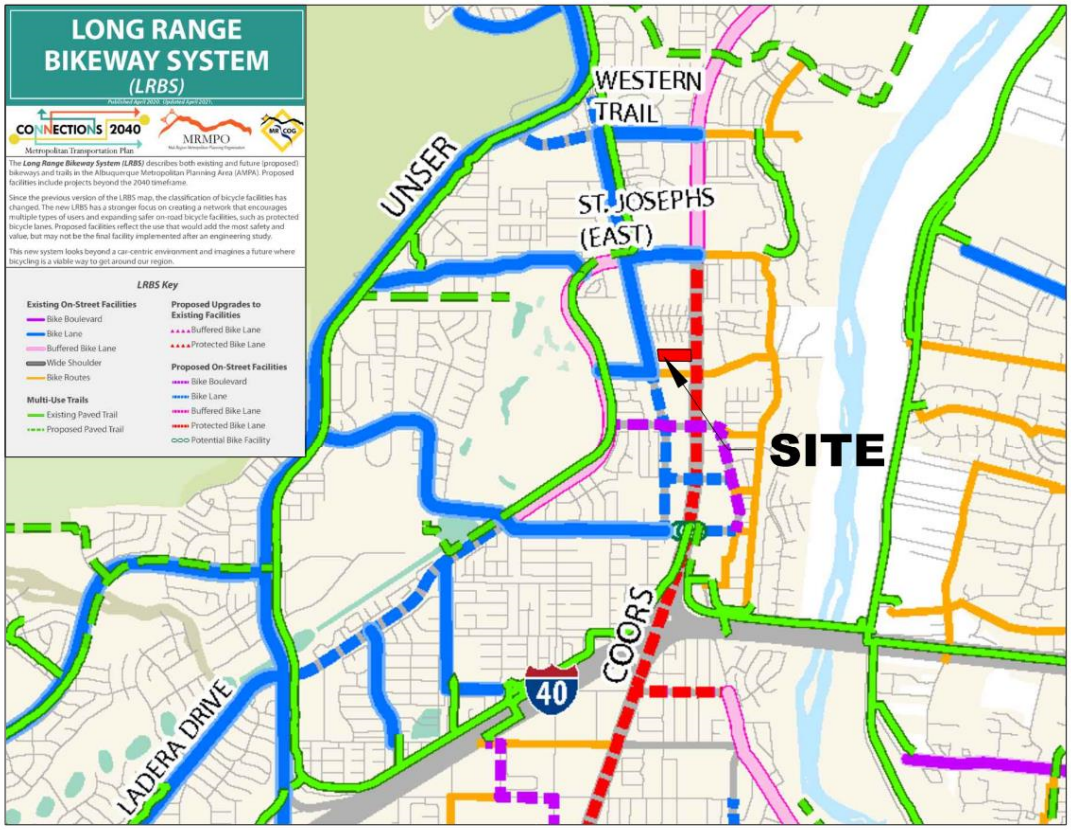

Portion of Futures 2040 Long Range Bikeway System (from Mid-Region Council of Governments)

Analysis of Existing Conditions

Base traffic volumes were projected from the historical annual background traffic growth rates on the 2019 Traffic Flow Map and demonstrated on this Page below. Existing volumes were not analyzed since 2024 “No Build” analysis and will approximate existing conditions analysis. The 2019 Traffic Flow Map can be found on Page 7.

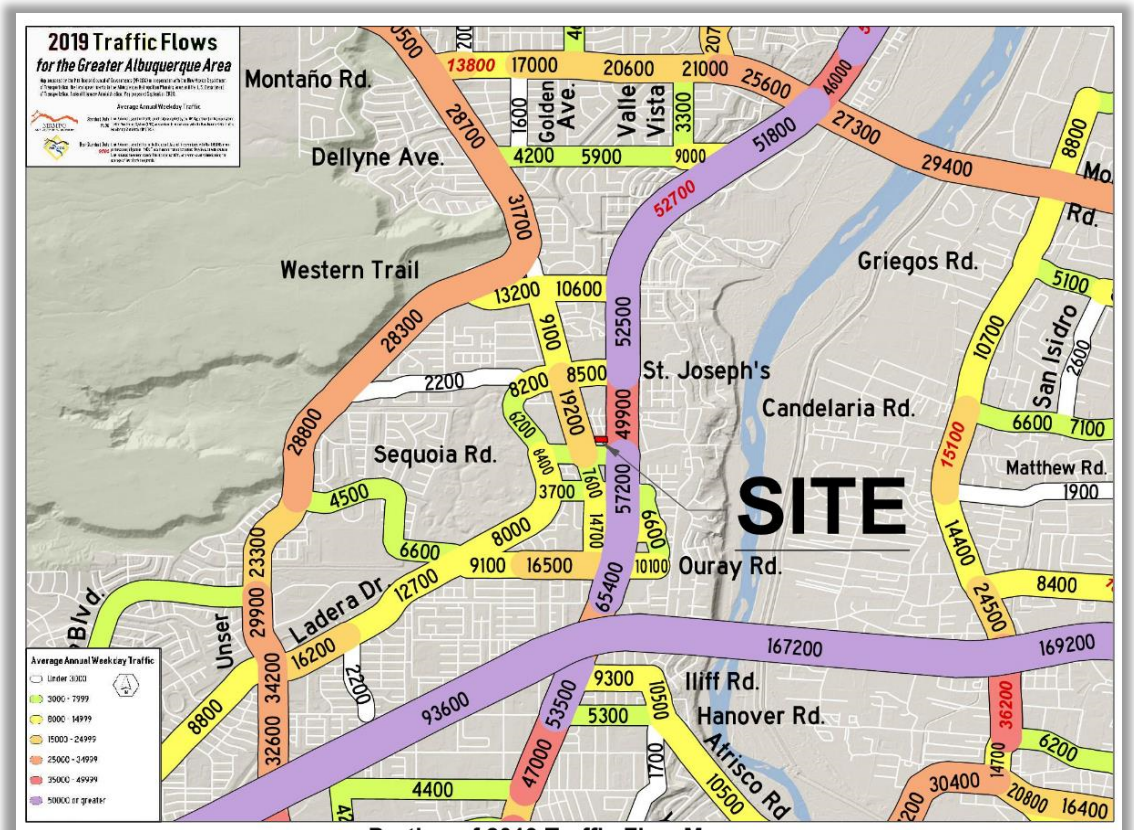

Portion of 2019 Traffic Flow Map
(from Mid-Region Council of Governments)

Existing Traffic Volumes

Analysis of existing conditions was not performed for this Study since the Implementation Year (2024) NO BUILD Conditions results should closely approximate the existing conditions analyses. Traffic count data for the study area as defined in the Scoping Meeting was collected in May 2023 while school was in session. Summarized Volumes can be found in Appendix A-76 through A-78.

Existing Signal Phasing

The signal analyzed for the Global Storage Traffic Impact Study includes Coors Blvd. (N-S) and Sequoia Rd. (E-W) with a cycle length of 150 seconds in the AM and PM. The north and southbound movements include protected-permitted signal phasing, and the east and westbound approaches are permissive phasing. The signal timing was updated per COA in 2019. Note that the adjacent traffic signals to the north and to the south on Coors Blvd. were not included in the Study Area. Therefore, no specific progression factors were included in the HCS analysis. Therefore, the analysis assumed a Type III Arrival Factor for all approaches.

Level of Service (LOS)

According to the NMDOT State Highway Access Management Requirements, LOS standards are defined by Access Category on page 51. Table 15.C-1 identifies the minimum acceptable LOS standards by access category and facility type as shown below. Level of service (LOS) F shall not generally be acceptable for individual movements.

Table 15.C-1
Minimum Acceptable Level of Service Standards

Facility Type [1]	Access Categories (see Sub-Section 10.D)							
	UINT	UPA	UMA	UCOL	RINT	RPA	RMA	RCOL
Freeway Sections	D	-	-	-	C	-	-	-
Ramp Junctions	D	- [2]	- [2]	- [2]	C	- [2]	- [2]	- [2]
Weaving Areas	D	- [2]	- [2]	- [2]	C	- [2]	- [2]	- [2]
Multi-lane Highways	-	D	D	C	-	C	C	B
Two-Lane Highways	-	D	D	C	-	C	C	B
Signalized Intersections	-	D	D	D	-	C	C	C
Unsignalized Intersections	-	D	D	D	-	D	D	C

Notes: 1. The Facility Types are per the Highway Capacity Manual.
2. Evaluate safety and operational concerns using the best available technique.

As shown in Table 15.C-1, all Urban Roadways or intersections that are classified within this study should have a LOS D or better or mitigated to maintain the LOS (No Build) condition levels. The intersection of Coors Blvd. and Sequoia Rd. demonstrates a LOS C or better for the No Build and Build conditions. Therefore, it was not necessary to consider mitigations at this intersection.

The existing Driveway “A” located off Coors Blvd. results in a LOS “F” for the 2034 NO BUILD and BUILD conditions. The site does not have any significant adverse impact on the adjacent transportation system. Therefore, no recommendation is made.

The existing Driveway “B” located off Sequoia Rd. results in a LOS “B” or better for the NO BUILD and BUILD conditions. Therefore, no mitigation is required for this driveway.

Analysis of Implementation Year Conditions

Traffic Projections

The implementation year for this project is 2024 and the Horizon Year is 2034. The MRCOG Regional Transportation Model data from 2010 to 2021 (with the exclusion of year 2020-2021) was used to determine the historical growth rates. The calculated overall **growth rate** at the intersections is 1.0% for the Implementation Year and Horizon Year. See Appendix A-09 through A-10 for the Historic Growth Rate Data Table.

Background Traffic

Background traffic volumes were calculated by applying historical annual background traffic growth rates to the existing traffic volumes, and then by adding the proposed Coors Pavilion and Oxbow Development traffic volumes for the Implementation Year (2024) No Build volumes.

Trip Generation

The Implementation Year for this project is 2024 and the Horizon Year is 2034. According to the Institute of Traffic Engineers’ trip generation rates for the proposed Global Storage Development, the commercial trips were calculated using data for Mini-Warehousing (ITE Code 151), High Turnover (sit-down) Restaurant (ITE Code 932), and a brewery Tap Room (971). The existing development for trips was then subtracted from the proposed trips generated from the site High Turnover (sit-down) Restaurant (ITE Code 932) and RV Park (ITE Code 416). Generated trips for the commercial development can be found below.

Global Storage (Coors / Sequoia)

Trip Generation Data **(ITE Trip Generation Manual - 11th Edition)**

USE (ITE CODE)		24 HR VOL	A. M. PEAK HR.		P. M. PEAK HR.	
DESCRIPTION		*GROSS*	*ENTER*	*EXIT*	*ENTER*	*EXIT*
Summary Sheet	Units					
Mini-Warehousing (151)	150.00	218	8	6	11	12
High Turnover (Sit-Down) Restaurant (932)	9.90	1,061	52	43	55	35
Brewery Tap Room (971)	3.80	234	2	-	22	15
Subotal - Total Project (Including Existing uses)		1,513	62	49	88	62
Campground / RV Park (416)	2.20	-	-	1	1	1
High Turnover (Sit-Down) Restaurant (932)	9.80	1,051	52	42	54	35
Subtotal - Existing Uses		1,051	52	43	55	36
New Trips		**462**	**10**	**6**	**33**	**26**

Trip Distribution and Trip Assignments

Trip assignments percentages for new trips entering and exiting are derived from data established in the trip distribution determination process and logical routing. Retail commercial trips were distributed based on Mid-Region Council of Governments' Socio-economic data (2016-2040 data set).

The retail commercial trips were distributed proportionally and assigned based on population distribution within a two-mile radius of the project. The population data was collected from the MRCOG 2040 Socioeconomic Forecasts. The MRCOG DASZ Map below provides a visual of the data analysis subzones for commercial trips that will be entering and exiting the site. The Data Table and Maps used to calculate the Commercial Trip Distribution percentages can be found in Appendix Pages A-11 through A-16 and the map is shown below.

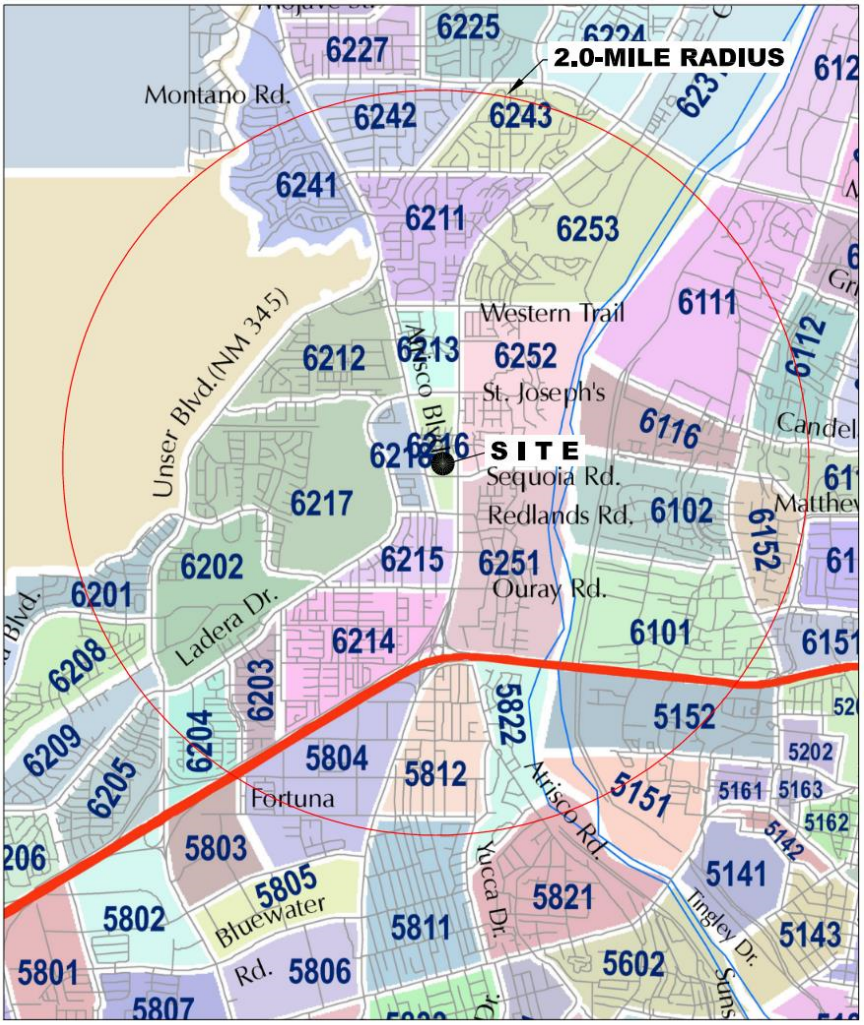

DATA ANALYSIS SUBZONE (DASZ) MAP

Global Storage (Coors & Sequoia)

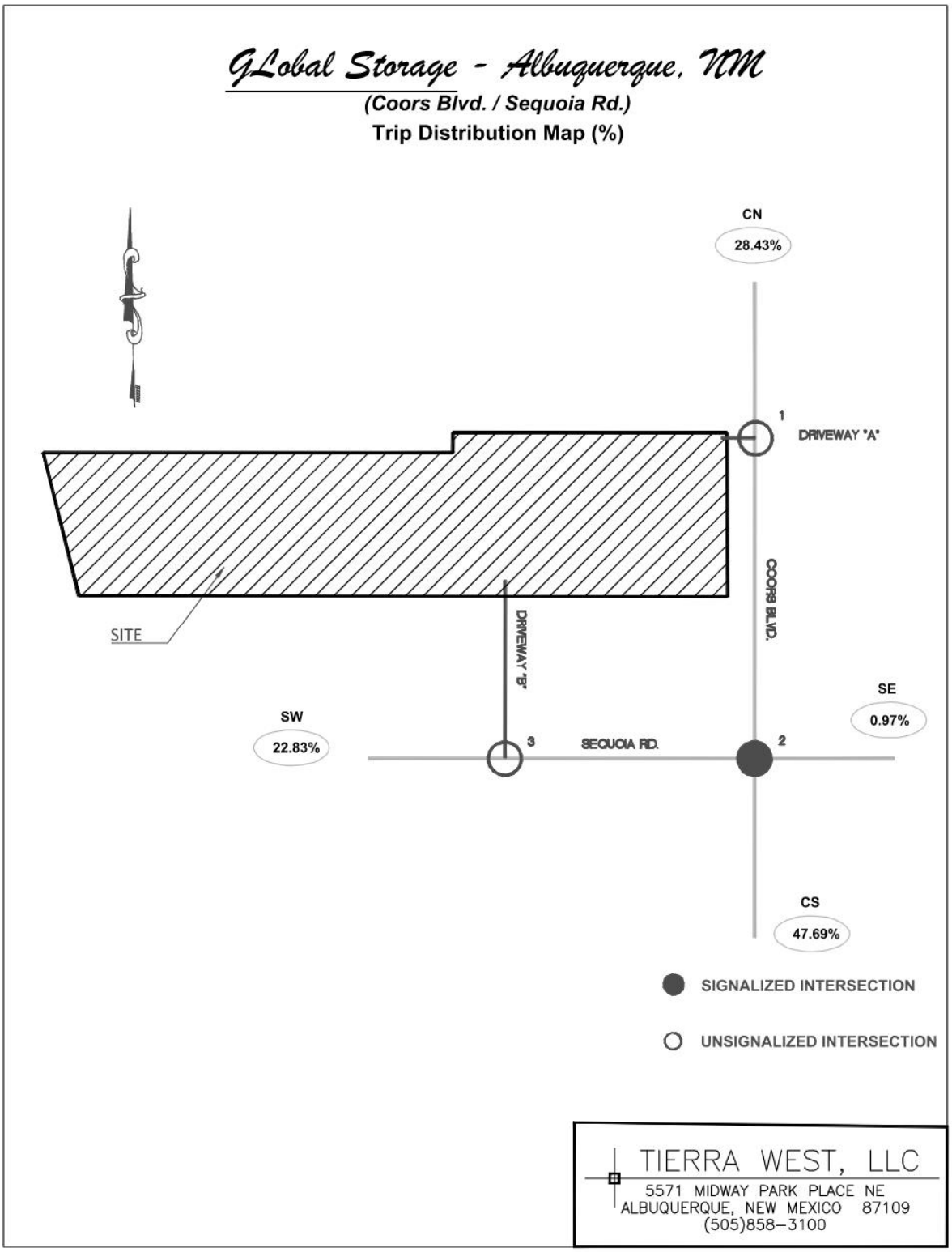
GLobal Storage - Albuquerque, NM
(Coors Blvd. / Sequoia Rd.)
Trip Distribution Map (%)
CN
28.43%
1
DRIVEWAY "A"
COORS BLVD.
SITE
DRIVEWAY "B"
SE
0.97%
SW
22.83%
3
SEQUOIA RD.
2
CS
47.69%
SIGNALIZED INTERSECTION
UNSIGNALIZED INTERSECTION
TIERRA WEST, LLC
5571 MIDWAY PARK PLACE NE
ALBUQUERQUE, NEW MEXICO 87109
(505)858-3100

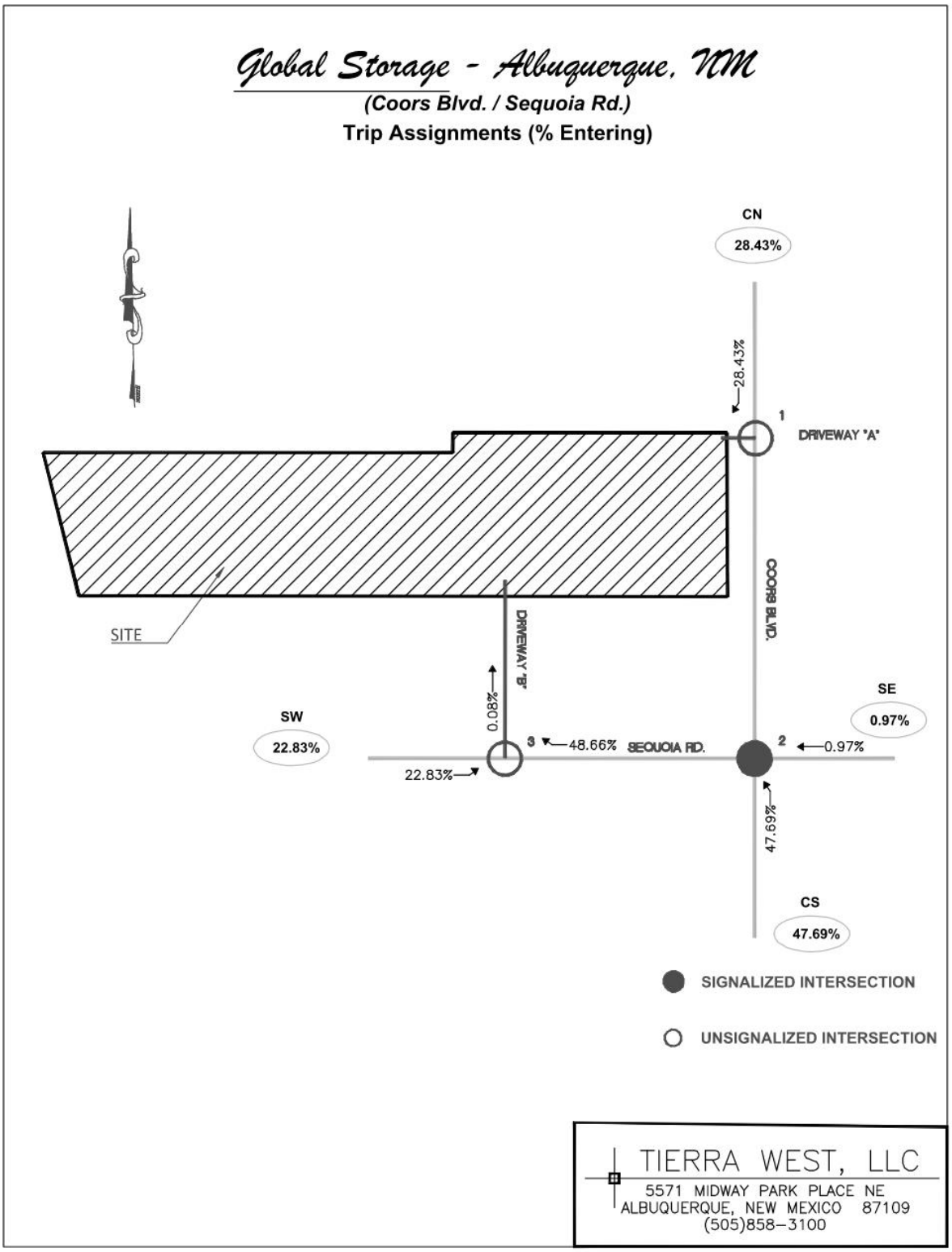
Global Storage - Albuquerque, NM
(Coors Blvd. / Sequoia Rd.)
Trip Assignments (% Entering)
CN
28.43%
28.43%
1
DRIVEWAY "A"
COORS BLVD.
SITE
DRIVEWAY "B"
0.08%
SW
22.83%
3
48.66%
SEQUOIA RD.
22.83%
2
0.97%
SE
0.97%
47.69%
CS
47.69%
SIGNALIZED INTERSECTION
UNSIGNALIZED INTERSECTION
TIERRA WEST, LLC
5571 MIDWAY PARK PLACE NE
ALBUQUERQUE, NEW MEXICO 87109
(505)858-3100

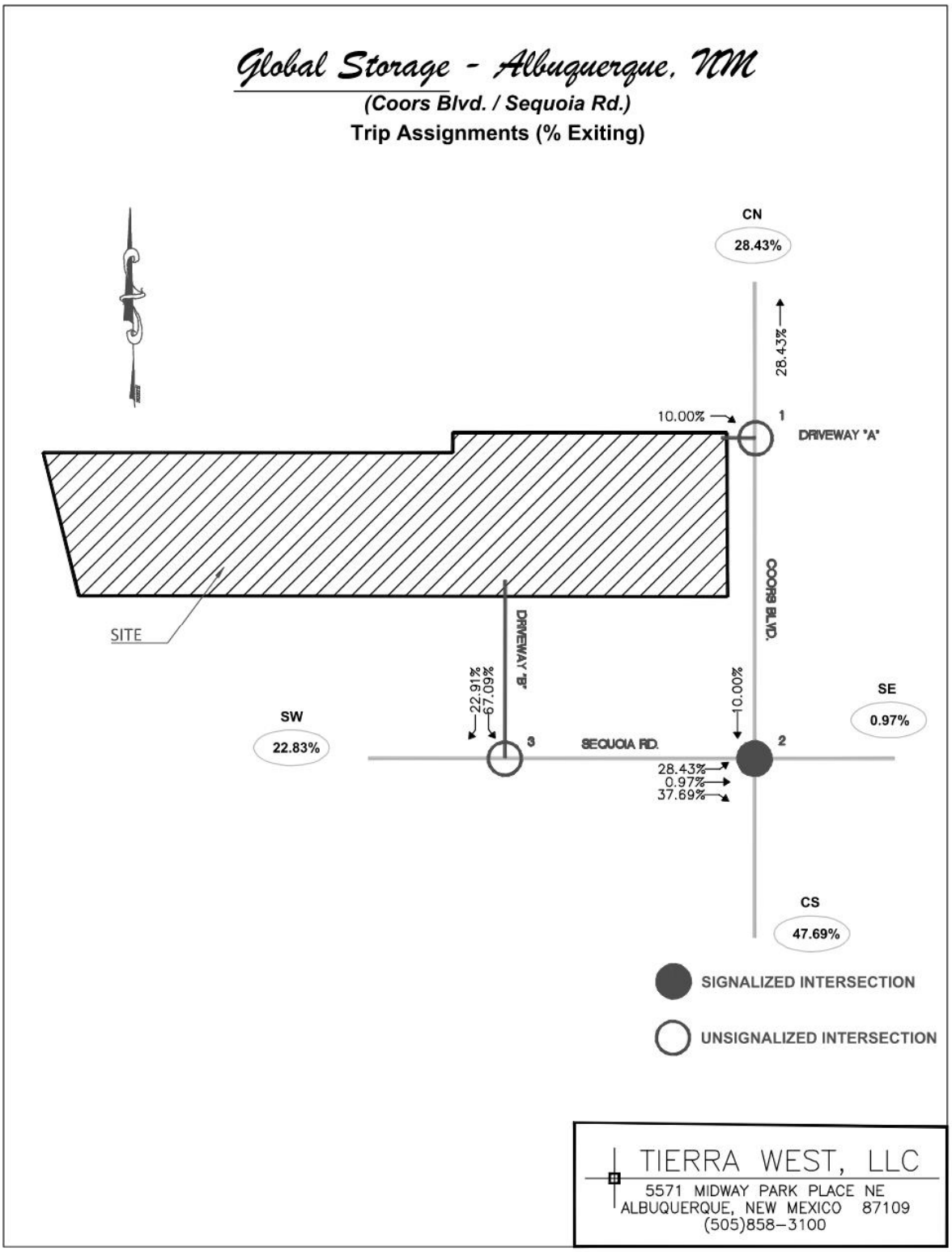
Global Storage - Albuquerque, NM
(Coors Blvd. / Sequoia Rd.)
Trip Assignments (% Exiting)
CN
28.43%
28.43%
10.00%
1
DRIVEWAY "A"
COORS BLVD.
SITE
DRIVEWAY "B"
22.91%
67.09%
10.00%
SE
0.97%
SW
22.83%
3
SEQUOIA RD.
2
28.43%
0.97%
37.69%
CS
47.69%
SIGNALIZED INTERSECTION
UNSIGNALIZED INTERSECTION
TIERRA WEST, LLC
5571 MIDWAY PARK PLACE NE
ALBUQUERQUE, NEW MEXICO 87109
(505)858-3100

NO BUILD and BUILD Traffic Volumes

NO BUILD volumes were generated by growing the existing volumes at the annual background traffic growth rate. BUILD volumes were calculated by adding the NO BUILD volumes to the trips generated by the project. The trip assignment percentages were used to distribute the trips generated to the individual traffic movements at each intersection. The turning movement counts for the **2024 and 2034 AM and PM Peak Hour, NO BUILD, and BUILD** conditions for each movement in each intersection the study area are provided below:

2024 AM No Build Volumes

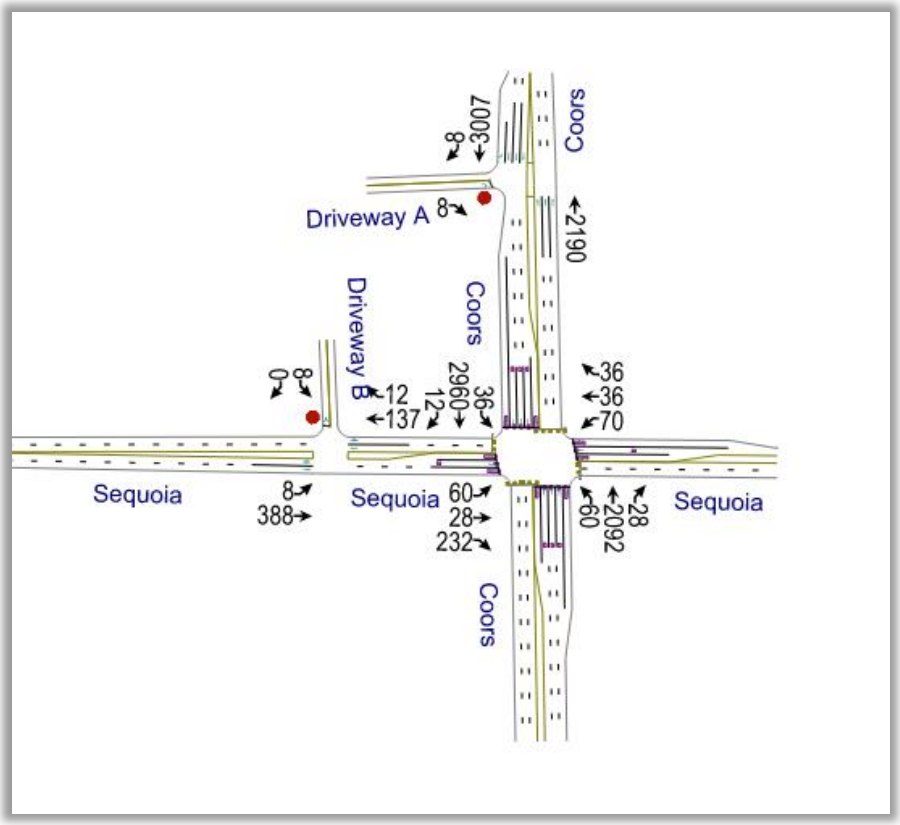

2024 AM Build Volumes

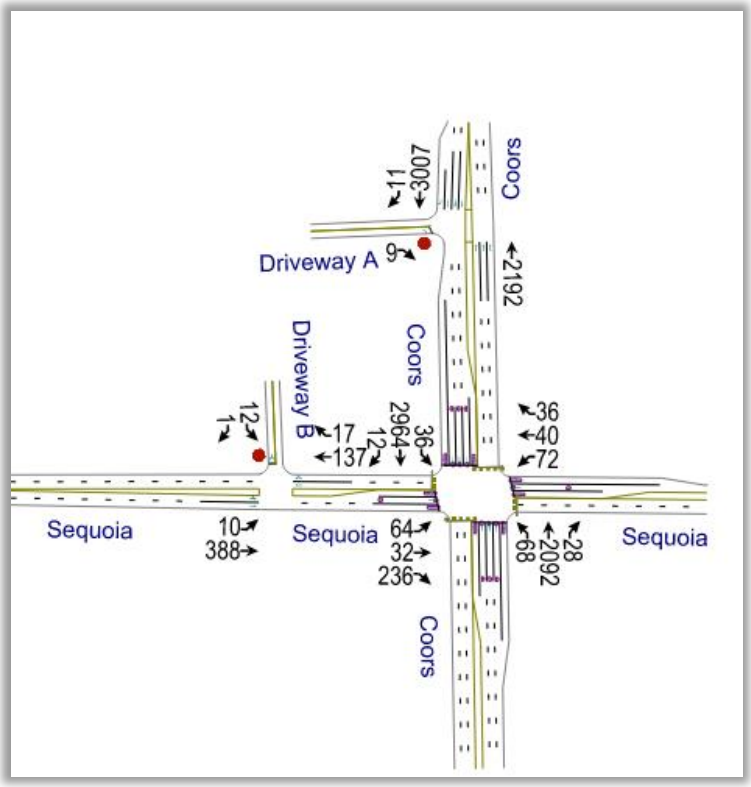

2024 PM No Build Volumes

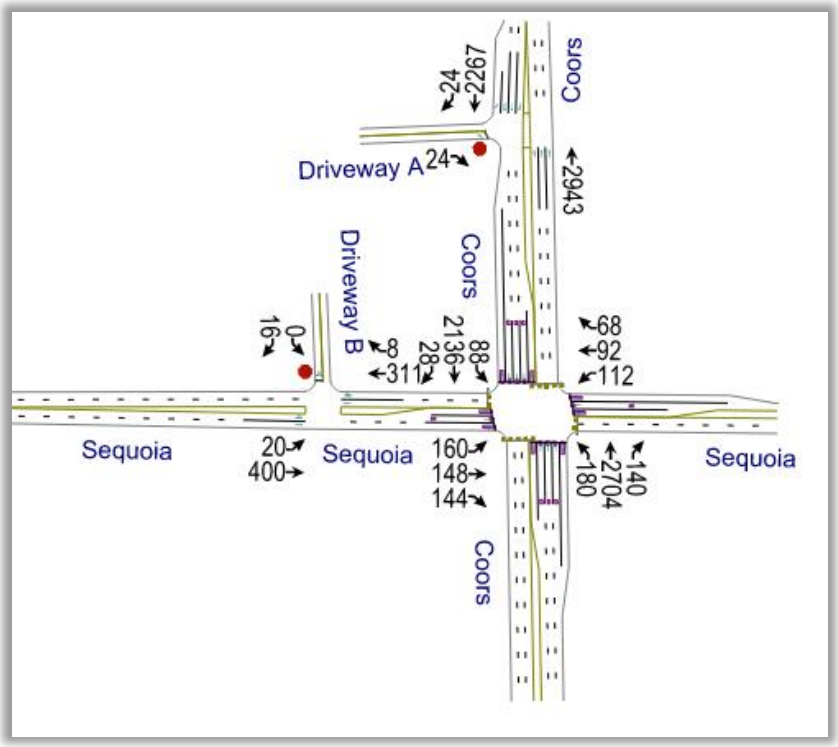

2024 PM Build Volumes

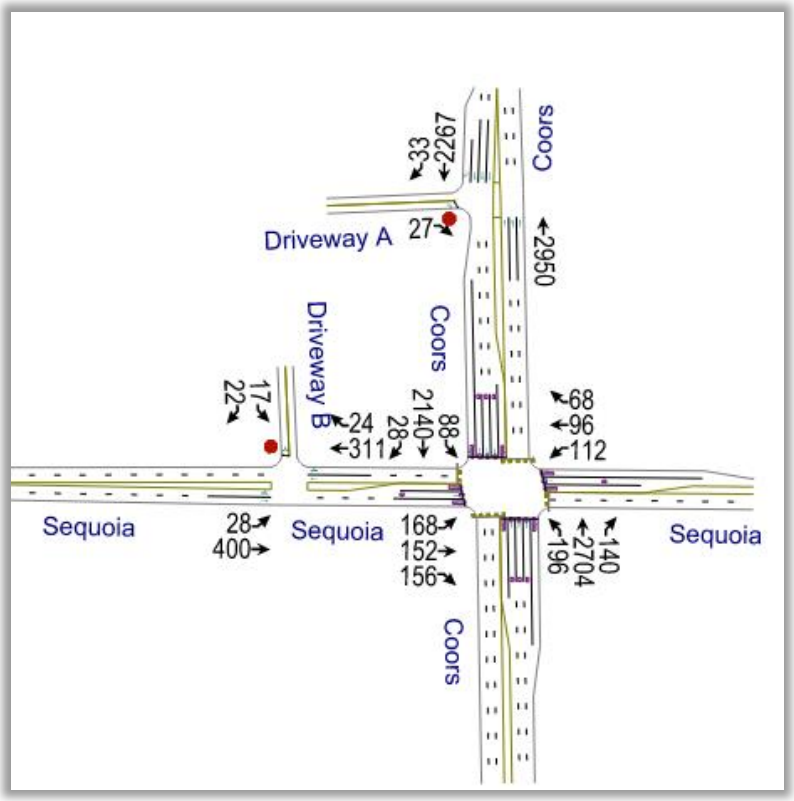

2034 AM No Build Volumes

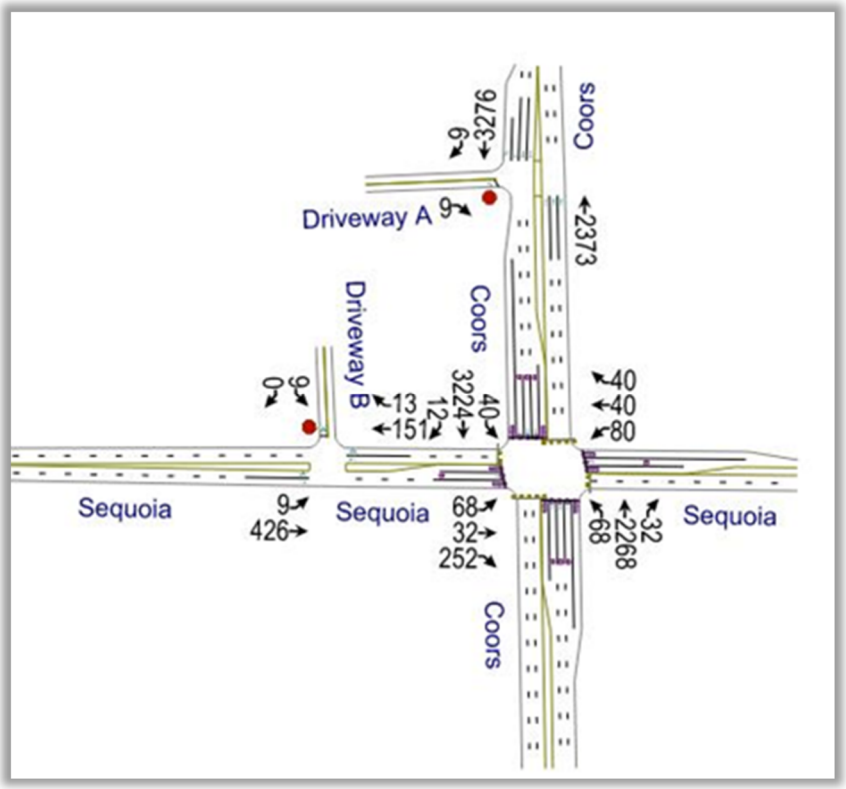

2034 AM Build Volumes

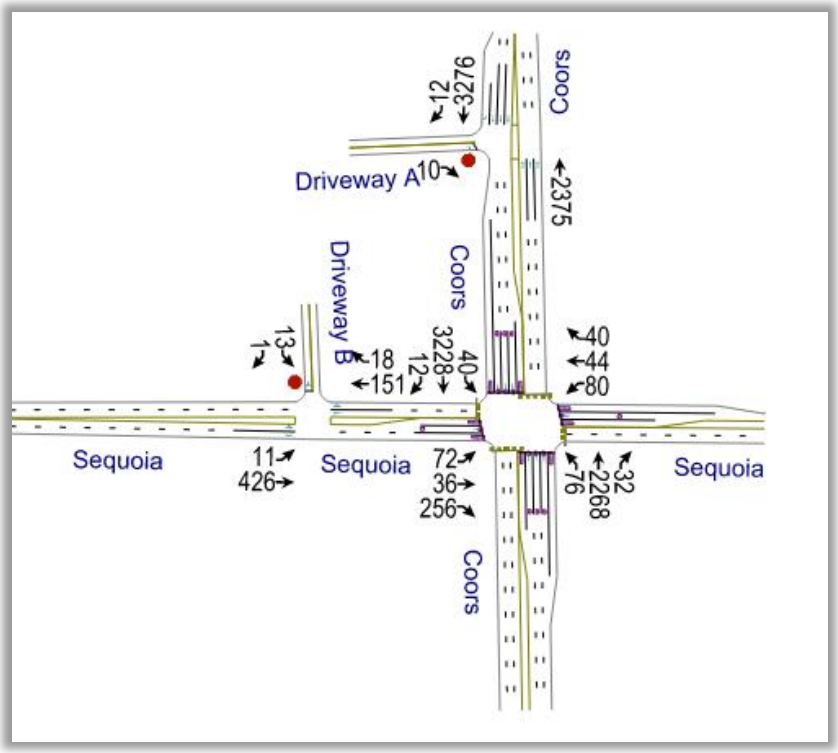

2034 PM No Build Volumes

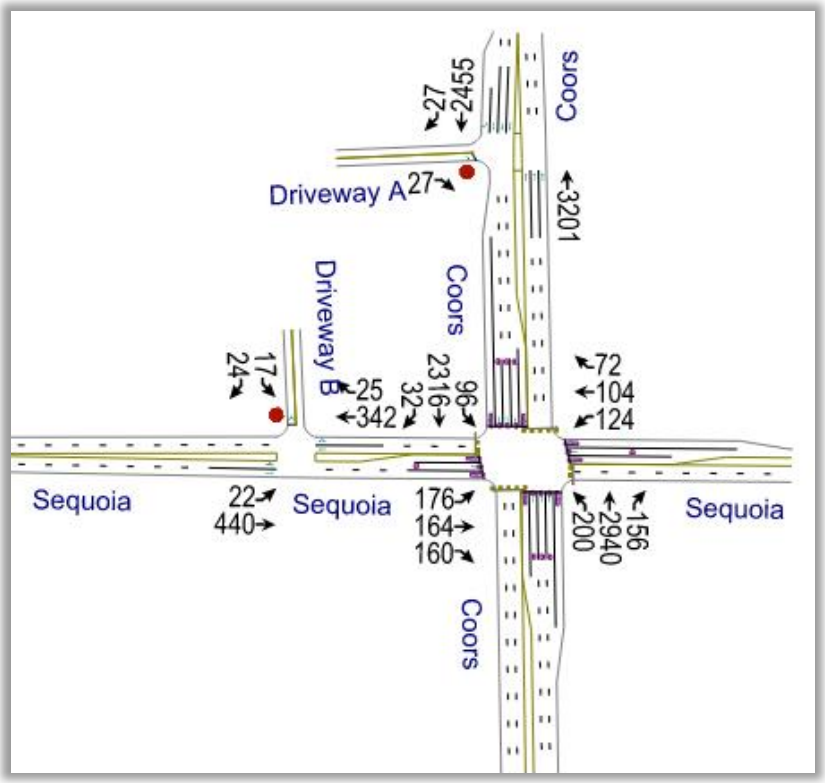

2034 PM Build Volumes

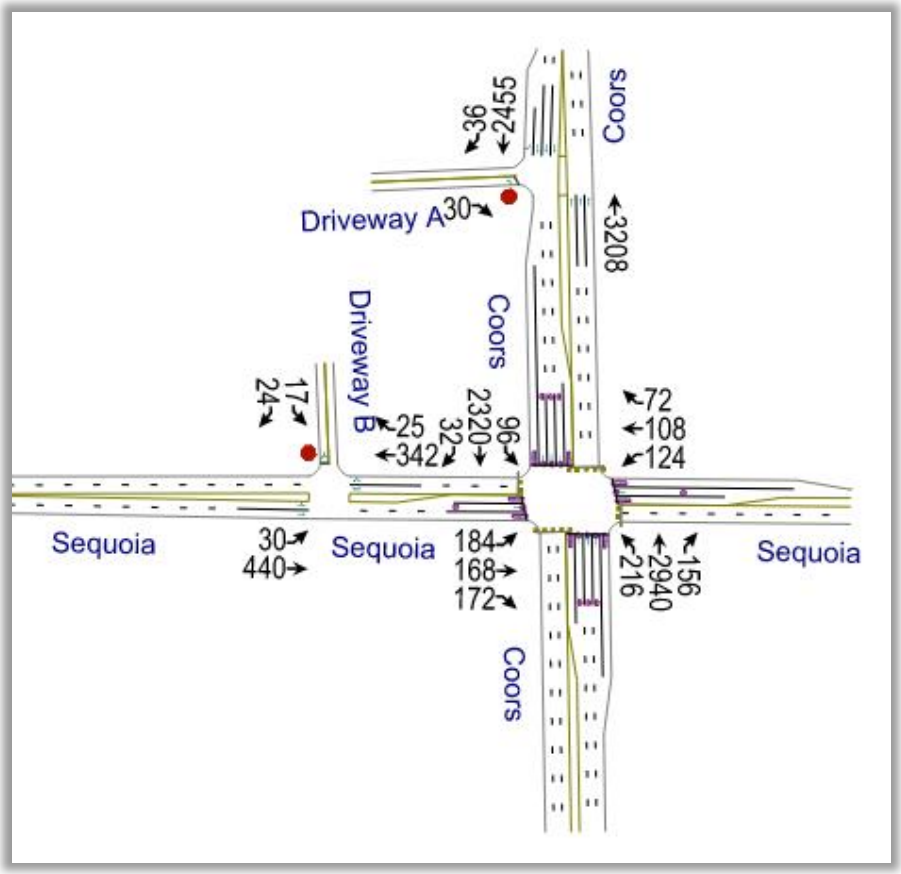

Traffic Analysis

The capacity analysis was conducted for the following No Build and Build scenarios:

- Implementation Year 2024
- Horizon Year 2034

The Highway Capacity Manual establishes a criterion for the determinations of signalized and unsignalized levels-of-service. These levels determine if an intersection operation will be adequate to accommodate the projected volumes from the new development without excessive delays or congestion. The average control delay is calculated for each intersection and for each lane group of each leg of the intersection. The analysis of the calculated control delay determines the level-of-service for each lane group. However, if the v/c ratio is 1.0 or greater, then the v/c ratio overrides the calculated delay and qualifies the lane group to be LOS “F”. The control delay generally determines the level-of-service based on the following tables, next page:

LEVEL-OF-SERVICE CRITERIA FOR SIGNALIZED INTERSECTIONS

Average Delay (secs)	Level-of-Service
≤ 10	A
> 10 and ≤ 20	B
> 20 and ≤ 35	C
> 35 and ≤ 55	D
> 55 and ≤ 80	E
> 80	F

LEVEL-OF-SERVICE CRITERIA FOR UNSIGNALIZED INTERSECTIONS

Average Delay (secs)	Level-of-Service
≤ 10	A
> 10 and ≤ 15	B
> 15 and ≤ 25	C
> 25 and ≤ 35	D
> 35 and ≤ 50	E
> 50	F

A Level-of-Service D or better is considered acceptable in urban areas. A capacity analysis was conducted in accordance with the Highway Capacity Manual (HCM7) for the signalized and unsignalized intersections using Synchro 11 and McTrans HCS 2023 Street Version 8.2 modeling software.

The signalized intersection of Coors Blvd. and Sequoia Rd. was analyzed in HCS for a single period analysis. HCS identified that no movements at this intersection had a Volume to Capacity Rations (V/C) greater than 1, which does not require a multi-period analysis at the signalized intersection. Analysis was conducted on the remaining two Driveways using Synchro 11 (Build 11.1.2.9) modeling software. See Appendix pages A-57 through A-59 for detailed results of the analysis.

The following pages contain the Lanes and Volumes Analysis Tables for this study. The Tables summarize numerically how Global Storage impacts the adjacent intersection system, and how the project driveways are expected to perform. Also, shown graphically are the intersection geometries. Further detail is found in the individual Intersection analysis summary tables for each intersection in the next section of the report.

#1 – Coors Blvd. / Driveway “A” – Unsignalized

The results of the 2024 (Implementation Year) and 2034 (Horizon Year) analysis of the signalized intersection of Coors Blvd. and Driveway “A”. are summarized in the following tables below and on Pages A-31 and A-57:

Unsignalized

Coors Blvd. / Driveway "A" 2024_Conditions	EB (Driveway "A")			NB (Coors Blvd.)			SB (Coors Blvd.)		
	L	T	R	L	T	R	L	T	R
Existing Lane Geometry			1		3			3	1
AM Peak Hour									
NO BUILD Volumes			8		2,190			3,007	8
V/C Ratio			0.09						
Level-of-Service			E						
Control Delay (Seconds)			46.8						
Intersection LOS					**TWSC**				
95th Percentile Queue (veh)			0.3						
BUILD Volumes			9		2,192			3,007	11
V/C Ratio			0.10						
Level-of-Service			E						
Control Delay (Seconds)			47.3						
Intersection LOS					**TWSC**				
95th Percentile Queue (veh)			0.3						
PM Peak Hour									
NO BUILD Volumes			24		2,943			2,267	24
V/C Ratio			0.14						
Level-of-Service			D						
Control Delay (Seconds)			30.1						
Intersection LOS					**TWSC**				
95th Percentile Queue (veh)			0.5						
BUILD Volumes			27		2,950			2,267	33
V/C Ratio			0.16						
Level-of-Service			D						
Control Delay (Seconds)			30.7						
Intersection LOS					**TWSC**				
95th Percentile Queue (veh)			0.6						

Unsignalized

Coors Blvd. / Driveway "A" 2034_Conditions	EB (Driveway "A")			NB (Coors Blvd.)			SB (Coors Blvd.)		
	L	T	R	L	T	R	L	T	R
Existing Lane Geometry			1		3			3	1
AM Peak Hour									
2034 NO BUILD Volumes			9		2,373			3,276	9
V/C Ratio			0.12						
Level-of-Service			F						
Control Delay (Seconds)			58.6						
Intersection LOS					**TWSC**				
95th Percentile Queue (veh)			0.4						
2034 BUILD Volumes			10		2,375			3,276	12
V/C Ratio			0.13						
Level-of-Service			F						
Control Delay (Seconds)			59.4						
Intersection LOS					**TWSC**				
95th Percentile Queue (veh)			0.4						
PM Peak Hour									
2034 NO BUILD Volumes			27		3,201			2,455	27
V/C Ratio			0.19						
Level-of-Service			E						
Control Delay (Seconds)			35.4						
Intersection LOS					**TWSC**				
95th Percentile Queue (veh)			0.7						
2034 BUILD Volumes			30		3,208			2,455	36
V/C Ratio			0.21						
Level-of-Service			E						
Control Delay (Seconds)			36.2						
Intersection LOS					**TWSC**				
95th Percentile Queue (veh)			0.7						

2024 and 2034 LOS Analysis demonstrates that the Global Storage Development will have minimal impact on the LOS and delays for the 2034 AM and PM Build conditions. The LOS remains the same for the NO BUILD and BUILD conditions. The calculated delays increase marginally. The 2034 AM No Build and Build conditions demonstrate a LOS F for the intersection at the EBR movement. These are existing delays from the initial development, so no mitigation is recommended by the redevelopment of Global Storage.

2024 and 2034 Queueing Analysis demonstrates that additional queueing capacity is not required at this driveway. V/C ratios (a measure of congestion) are less than 1 for all movements for the Implementation Year (2024) and Horizon Year (2034). Therefore, no mitigations are recommended.

There are no recommendations at the intersection of Coors Blvd. and Driveway "A."

#2 – Coors Blvd. / Sequoia Rd. – Signalized

The results of the 2024 (Implementation Year) and 2034 (Horizon Year) analysis of the signalized intersection of Coors Blvd. and Sequoia Rd. are summarized in the following tables below and on Pages A-32 and A-58:

Signalized

Coors Blvd. / Sequoia Rd. 2024_Conditions	EB (Sequoia Rd.)			WB (Sequoia Rd.)			NB (Coors Blvd.)			SB (Coors Blvd.)		
	L	T	R	L	T	R	L	T	R	L	T	R
Existing Lane Geometry	1	1	1	1	1	1	1	3	1	1	3	1
AM Peak Hour												
NO BUILD Volumes	60	28	232	70	36	36	60	2,092	28	36	2,960	12
V/C Ratio	0.24	0.09	0.80	0.28	0.12	0.13	0.54	0.57	0.03	0.20	0.81	0.01
Level-of-Service	E	D	E	E	D	D	D	B	A	A	B	A
Control Delay (Seconds)	57.7	53.5	68.0	57.7	53.8	52.0	37.3	10.3	5.8	9.7	16.4	6.0
Intersection LOS	**B - 18.0**											
Queue Storage Ratio	1.1	0.0	0.0	0.8	0.0	0.2	0.6	0.0	0.1	0.1	0.0	0.0
Length of Queue (ft)	96.1			112.4		53.9	78.6		10.9	13.9		4.8
Existing Lane Capacity (ft)	90.0			145.0		245.0	125.0		200.0	115.0		280.0
Additional Queue Length Required (ft)	6.1			0.0		0.0	0.0		0.0	0.0		0.0
BUILD Volumes	64	32	236	72	40	36	68	2,092	28	36	2,964	12
V/C Ratio	0.26	0.10	0.80	0.28	0.13	0.13	0.59	0.57	0.03	0.21	0.82	0.01
Level-of-Service	E	D	E	E	D	D	D	B	A	A	B	A
Control Delay (Seconds)	57.9	53.3	67.3	57.7	53.6	51.7	39.8	10.5	5.9	9.9	17.0	6.2
Intersection LOS	**B - 18.5**											
Queue Storage Ratio	1.1	0.0	0.0	0.8	0.0	0.2	0.7	0.0	0.1	0.1	0.0	0.0
Length of Queue (ft)	102.8			115.9		53.7	89.3		11.1	14.2		4.9
Existing Lane Capacity (ft)	90.0			145.0		245.0	125.0		200.0	115.0		280.0
Additional Queue Length Required (ft)	12.8			0.0		0.0	0.0		0.0	0.0		0.0

PM Peak Hour												
NO BUILD Volumes	160	148	144	112	92	68	180	2,704	140	88	2,136	28
V/C Ratio	0.79	0.49	0.44	0.70	0.30	0.23	0.84	0.75	0.13	0.65	0.61	0.03
Level-of-Service	F	E	D	F	E	D	D	B	A	D	B	A
Control Delay (Seconds)	84.8	58.3	52.8	81.1	55.8	51.7	38.0	14.8	7.0	35.3	12.8	7.1
Intersection LOS	**C - 21.0**											
Queue Storage Ratio	3.3	0.0	0.0	1.5	0.0	0.4	1.9	0.0	0.3	1.0	0.0	0.0
Length of Queue (ft)	297.4			217.7		102.3	235.8		62.8	112.2		12.5
Existing Lane Capacity (ft)	90.0			145.0		245.0	125.0		200.0	115.0		280.0
Additional Queue Length Required (ft)	207.4			72.7		0.0	110.8		0.0	0.0		0.0
BUILD Volumes	168	152	156	112	96	68	196	2,704	140	88	2,140	28
V/C Ratio	0.84	0.50	0.47	0.72	0.32	0.23	0.89	0.75	0.13	0.65	0.61	0.03
Level-of-Service	F	E	D	F	E	D	D	B	A	C	B	A
Control Delay (Seconds)	93.2	58.5	52.7	82.9	56.0	51.7	47.9	14.8	7.0	35.0	13.2	7.3
Intersection LOS	**C - 22.0**											
Queue Storage Ratio	3.6	0.0	0.0	1.5	0.0	0.4	2.1	0.0	0.3	1.0	0.0	0.1
Length of Queue (ft)	322.5			220.1		102.3	266.2		62.8	111.3		12.8
Existing Lane Capacity (ft)	90.0			145.0		245.0	125.0		200.0	115.0		280.0
Additional Queue Length Required (ft)	232.5			75.1		0.0	141.2		0.0	0.0		0.0

Signalized

Coors Blvd. / Sequoia Rd. 2034_Conditions	EB (Sequoia Rd.)			WB (Sequoia Rd.)			NB (Coors Blvd.)			SB (Coors Blvd.)		
	L	T	R	L	T	R	L	T	R	L	T	R
Existing Lane Geometry	1	1	1	1	1	1	1	3	1	1	3	1
AM Peak Hour												
2034 NO BUILD Volumes	68	32	252	80	40	40	68	2,268	32	40	3,224	12
V/C Ratio	0.26	0.10	0.81	0.30	0.12	0.13	0.67	0.63	0.03	0.26	0.91	0.01
Level-of-Service	E	D	E	E	D	D	D	B	A	B	C	A
Control Delay (Seconds)	56.7	52.1	68.1	56.8	52.4	50.6	48.1	12.1	6.4	12.6	22.3	6.6
Intersection LOS	**C - 21.9**											
Queue Storage Ratio	1.2	0.0	0.0	0.9	0.0	0.2	0.7	0.0	0.1	0.2	0.0	0.0
Length of Queue (ft)	108.2			127.8		59.0	90.5		13.4	17.5		5.1
Existing Lane Capacity (ft)	90.0			145.0		245.0	125.0		200.0	115.0		280.0
Additional Queue Length Required (ft)	18.2			0.0		0.0	0.0		0.0	0.0		0.0
2034 BUILD Volumes	72	36	256	80	44	40	76	2,268	32	40	3,228	12
V/C Ratio	0.28	0.11	0.81	0.30	0.13	0.13	0.73	0.63	0.03	0.26	0.91	0.01
Level-of-Service	E	D	E	E	D	D	D	B	A	B	C	A
Control Delay (Seconds)	56.9	52.0	67.5	56.8	52.3	50.3	50.4	12.3	6.5	12.7	23.2	6.8
Intersection LOS	**C - 23.7**											
Queue Storage Ratio	1.3	0.0	0.0	0.9	0.0	0.2	0.8	0.0	0.1	0.2	0.0	0.0
Length of Queue (ft)	114.9			127.9		58.8	102.5		13.5	17.5		5.2
Existing Lane Capacity (ft)	90.0			145.0		245.0	125.0		200.0	115.0		280.0
Additional Queue Length Required (ft)	24.9			0.0		0.0	0.0		0.0	0.0		0.0

PM Peak Hour												
2034 NO BUILD Volumes	176	164	160	124	104	72	200	2,940	156	96	2,316	32
V/C Ratio	0.91	0.54	0.45	0.84	0.34	0.24	0.89	0.82	0.14	0.76	0.68	0.03
Level-of-Service	F	E	D	F	E	D	E	B	A	D	B	A
Control Delay (Seconds)	108.3	59.5	50.7	102.9	56.3	51.5	61.6	17.3	7.3	50.5	15.6	8.1
Intersection LOS	**C - 25.2**											
Queue Storage Ratio	4.0	0.0	0.0	1.8	0.0	0.4	2.8	0.0	0.4	1.2	0.0	0.1
Length of Queue (ft)	356.1			261.8		108.4	353.9		71.6	133.1		15.7
Existing Lane Capacity (ft)	90.0			145.0		245.0	125.0		200.0	115.0		280.0
Additional Queue Length Required (ft)	266.1			116.8		0.0	228.9		0.0	18.1		0.0
2034 BUILD Volumes	184	168	172	124	108	72	216	2,940	156	96	2,320	32
V/C Ratio	0.97	0.55	0.46	0.86	0.36	0.24	0.90	0.82	0.14	0.76	0.69	0.03
Level-of-Service	F	E	D	F	E	D	E	B	A	D	B	A
Control Delay (Seconds)	123.9	59.9	49.8	107.2	56.5	51.5	67.8	17.4	7.3	49.5	16.7	8.6
Intersection LOS	**C - 26.6**											
Queue Storage Ratio	4.3	0.0	0.0	1.8	0.0	0.4	3.1	0.0	0.4	1.1	0.0	0.1
Length of Queue (ft)	390.8			266.3		108.3	383.8		71.6	130.6		16.3
Existing Lane Capacity (ft)	90.0			145.0		245.0	125.0		200.0	115.0		280.0
Additional Queue Length Required (ft)	300.8			121.3		0.0	258.8		0.0	15.6		0.0

2024 and 2034 LOS Analysis demonstrates that the project will have very minimal impact on the LOS and delays for the 2024 AM and PM BUILD conditions. The LOS remains remotely the same for the NO BUILD and BUILD conditions. The 2024 and 2034 PM NO BUILD and BUILD conditions demonstrate a LOS F for the intersection at the EBL and WBL movements. The development does not contribute to the WBL movement and very minimally to the EBL. These are existing delays from the initial development, so no mitigation is recommended by the redevelopment of Global Storage. In the case of the 2024 analysis, the LOS F for the eastbound and westbound left turn movements is not significantly over the 80 second threshold for LOS F.

2024 and 2034 Queueing Analysis has identified that there are four movements, additional queueing capacity is required at this intersection. V/C ratios (a measure of congestion) are less than 1 for all movements for the Implementation Year (2024) and Horizon Year (2034). The four identified queue length requirements include the EBL, WBL, NBL, and SBL. Global Storage does not contribute to the SBL and WBL movements, therefore no mitigations are recommended. The NBL cannot be extended due to it being in conjunction with another SBL turn bay; and the EBL movements cannot be extended due to the Well Fargo access entrance along Sequoia Rd.

There are no recommendations at the intersection of Coors Blvd. and Sequoia Rd.

#3 – Coors Blvd. / Driveway “B” – Unsignalized

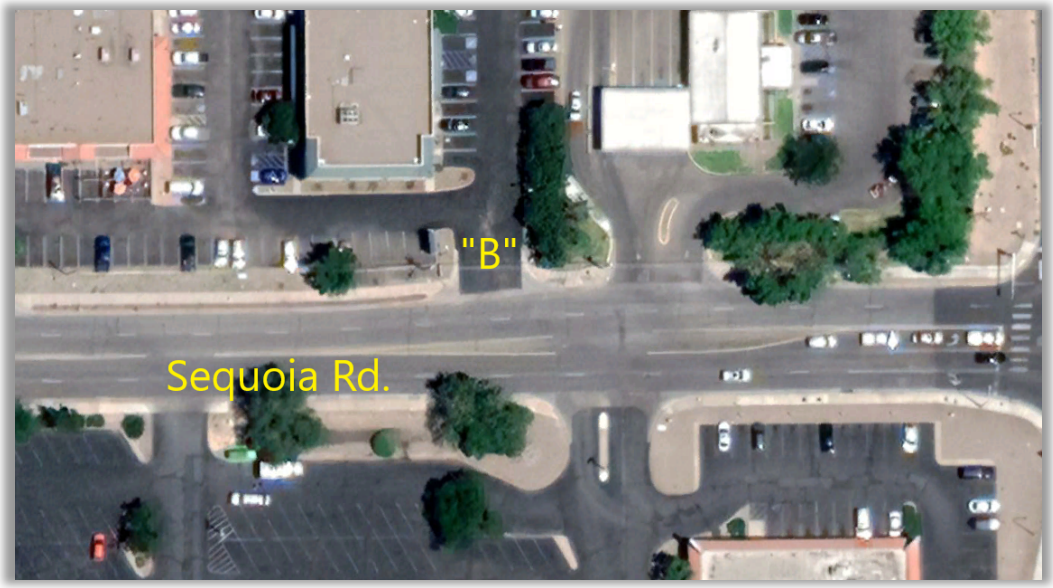

The results of the 2024 (Implementation Year) and 2034 (Horizon Year) analysis of the signalized intersection of Coors Blvd. and Driveway “B”. are summarized in the following tables below and on Pages A-33 and A-59:

Unsignalized

Coors Blvd. / Driveway "B" 2024_Conditions	EB (Driveway "B")			WB (Driveway "B")			SB (Coors Blvd.)		
	L	T	R	L	T	R	L	T	R
Existing Lane Geometry	0	<2			2>	0	1>		0
AM Peak Hour									
NO BUILD Volumes	8	388			137	12	8		0
V/C Ratio	0.01						0.01		
Level-of-Service	A	A					B		
Control Delay (Seconds)	7.5	0.0					11.0		
Intersection LOS	**TWSC**								
95th Percentile Queue (veh)	0.0						0.0		
BUILD Volumes	10	388			137	17	12		1
V/C Ratio	0.01						0.02		
Level-of-Service	A	A					B		
Control Delay (Seconds)	7.6	0.0					10.9		
Intersection LOS	**TWSC**								
95th Percentile Queue (veh)	0.0						0.1		

PM Peak Hour

NO BUILD Volumes	8	388			137	12	8		0
V/C Ratio	0.01						0.01		
Level-of-Service	A	A					B		
Control Delay (Seconds)	7.5	0.0					11.0		
Intersection LOS	**TWSC**								
95th Percentile Queue (veh)	0.0						0.0		
BUILD Volumes	28	400			311	24	17		22
V/C Ratio	0.02						0.07		
Level-of-Service	A	A					B		
Control Delay (Seconds)	8.0	0.1					11.5		
Intersection LOS	**TWSC**								
95th Percentile Queue (veh)	0.1						0.2		

Unsignalized

Coors Blvd. / Driveway "B" 2034_Conditions	EB (Driveway "B")			WB (Driveway "B")			SB (Coors Blvd.)		
	L	T	R	L	T	R	L	T	R
Existing Lane Geometry	0	<2			2>	0	1>		0
AM Peak Hour									
2034 NO BUILD Volumes	9	426			151	13	9		0
V/C Ratio	0.01						0.02		
Level-of-Service	A	A					B		
Control Delay (Seconds)	7.6	0.0					11.3		
Intersection LOS	**TWSC**								
95th Percentile Queue (veh)	0.0						0.0		
2034 BUILD Volumes	11	426			151	18	13		1
V/C Ratio	0.01						0.02		
Level-of-Service	A	A					B		
Control Delay (Seconds)	7.6	0.0					11.3		
Intersection LOS	**TWSC**								
95th Percentile Queue (veh)	0.0						0.1		
PM Peak Hour									
2034 NO BUILD Volumes	22	440			342	25	17		24
V/C Ratio	0.02						0.07		
Level-of-Service	A	A					B		
Control Delay (Seconds)	8.1	0.1					11.7		
Intersection LOS	**TWSC**								
95th Percentile Queue (veh)	0.1						0.2		
2034 BUILD Volumes	30	440			342	25	17		24
V/C Ratio	0.03						0.07		
Level-of-Service	A	A					B		
Control Delay (Seconds)	8.1	0.1					11.8		
Intersection LOS	**TWSC**								
95th Percentile Queue (veh)	0.1						0.2		

Both Implementation Year and the Horizon Year analysis in the above tables show that the unsignalized intersection of Sequoia Rd. and Driveway “B” is operating at an acceptable level of service for all conditions evaluated in this study. The new trips generated by the Global Storage present no significant adverse impact to this unsignalized intersection.

There are no recommendations at the intersection of Sequoia Rd. and Driveway “B.”

Determination of Warrants for Deceleration Lanes

Determination of Warrants for Deceleration Lanes were conducted for Driveway “A” in accordance with the NMDOT Auxiliary Lane Warrant Analysis. Table 17.B-1 identified the criteria for Urban, Two-Lane Highways. See appendix pages A-72 through A-75 for the detailed summary results.

Table 17.B-2
Criteria For Deceleration Lanes On
URBAN MULTI-LANE HIGHWAYS

Turning Volume[1] (vph)	LEFT-TURN DECELERATION LANE			RIGHT-TURN DECELERATION LANE		
	Minimum Directional Volume in the Through Lane (vphpl)[2]			Minimum Directional Volume in the Through Lane (vphpl)[2]		
	≤30 mph	35 to 40 mph	45 to 55 mph	≤30 mph	35 to 40 mph	45 to 55 mph
<5	Not Required	Not Required	Not Required	Not Required	Not Required	Not Required
5	Not Required	490	420	1,200	730	450
10	420	370	300	820	490	320
15	360	290	220	600	350	240
20	310	230	160	460	260	180
25	270	190	130	360	230	150
30	240	160	110	290	200	130
35	210	130	100	260	180	120
40	180	120	Required	240	170	110
45	160	110	Required	220	160	Required
50	140	Required	Required	200	Required	Required
55	120	Required	Required	190	Required	Required
≥56	Required	Required	Required	Required	Required	Required
	Left-turn Decelerataion Lanes are Required on Urban Multi-lane Highways for the following Left-turn Volumes: • ≤30 mph : 56 vph or more • 35 to 40 mph : 46 vph or more • 45 to 55 mph : 36 vph or more			*Right-turn Decelerataion Lanes are Required on Urban Multi-lane Highways for the following Right-turn Volumes:* • ≤30 mph : 56 vph or more • 35 to 40 mph : 46 vph or more • 45 to 55 mph : 41 vph or more		

Notes:
1. *Use linear interpolation for turning volumes between 5 and 55 vph.*
2. *The volume in the adjacent through lane includes through vehicles and turning vehicles.*

There is an existing right-turn deceleration lane that was extended to the minimum criteria of 370-FT (including transition) that was constructed in 2020. Therefore, no mitigation is recommended.

Summary of Impacts

The results of the Implementation Year (2024) and Horizon Yeah (2034) AM and PM Peak Hour NO BUILD AND BUILD Conditions are summarized in the following table:

Driveway B is on Sequoia not Coors

Executive Summary Results Table
Global Storage Development - Coors Blvd. / Sequoia Rd., Abq. NM

				2024 Conditions		2034 Conditions	
				Level of Service (LOS) - Delay (s/vehicle)			
	Intersection No. / Name	Signalization	Case	AM Peak	PM Peak	AM Peak	PM Peak
Single Period Analysis Using Synchro 11	1 - Coors Blvd. / Driveway "A"	Unsignalized	NO BUILD	E - 46.8	D - 30.1	F - 58.6	E - 35.4
			BUILD	E - 47.3	D - 30.7	F - 59.4	E - 36.2
	3 - Coors Blvd. / Driveway "B"	Unsignalized	NO BUILD	B - 11.0	B - 11.0	B - 11.3	B - 11.7
			BUILD	B - 10.9	B - 11.5	B - 11.3	B - 11.8
Single Period Analysis HCS7	2 - Coors Blvd. / Sequoia Rd.	Signalized	NO BUILD	B - 18.0	C - 21.0	C - 21.9	C - 25.2
			BUILD	B - 18.5	C - 22.0	C - 23.7	C - 26.6

A summary of the impacts and recommendations based on the results of Traffic Impact Study can be found below.

Summary of Recommendations

The project will not have impacts which raises to providing mitigations. The signalized intersection of Coors and Sequoia Rd. analyzed using HCS for a single period analysis identified that all movements at this intersection had Volume to Capacity Rations (V/C's) less than 1 which did not require a multi-period analysis. A single period analysis was conducted on the remaining unsignalized Driveways ("A" and "B") using Synchro 11 (Build 11.1.2.9) modeling software. See Appendix pages A-57 through A-59 for detailed results of the analysis.

In general, the operations of the intersection and driveways analyzed for Global Storage identified no areas of concern that are caused by the redevelopment of Sombremesa. The overall intersection LOS for the signalized intersection of Sequoia Rd. / Coors Blvd. resulted in a Level-of-Service D or better. The LOS at the two existing driveways is not significantly impacted by the new development and is considered y acceptable in urban areas.

Driveway B is on Sequoia not Coors

Mitigations and Recommendations Summary

Global Storage Development - Coors Blvd. / Sequoia Rd., Albuquerque, NM

Intersection	Mitigation	Intersection Recommendations	Deceleration Lane Warrants
1 - Coors Blvd / Driveway "A"	There are no Mitigations at this Intersection	There are no Recommendations at this Intersection.	There are no Deceleration Warrants at this Intersection.
2 - Coors Blvd / Sequoia Rd.	There are no Mitigations at this Intersection	There are no Recommendations at this Intersection.	There are no Deceleration Warrants at this Intersection.
3 - Coors Blvd / Driveway "B"	There are no Mitigations at this Intersection	There are no Recommendations at this Intersection.	There are no Deceleration Warrants at this Intersection.

In summary, the proposed Global Storage Development will have a no significant adverse impact on the adjacent transportation system. There are no recommendations in this report to improve the overall network and the access is acceptable to and from the proposed Development.

APPENDICES

Site Information	
Vicinity Map - Google Earth	*A-01*
Vicinity Map - Zone Atlas	*A-02*
Site Plan	*A-03*
Trip Generation	
Trip Generation Summary & Worksheets	*A-04 thru A-08*
Background Growth	
Background Growth Worksheet	*A-09 thru A-10*
Historic Background Growth Graphs	
Trip Distribution and Trip Assignments	
Trip Distribution Subarea Map (DASZ)	*A-11 to A-19*
Trip Distribution Worksheets	
Commercial Trip Distribution Map	
Commercial Trip Assignments Map (% Entering)	
Commercial Trip Assignments Map (% Exiting)	
2024 Turning Movement Counts	
Turning Movement Volumes Summary Sheet	*A-20*
Intersection 1 - Coors Blvd. / Driveway "A"	*A-21 to A-22*
Intersection 3 - Coors Blvd. / Driveway "B"	*A-23 to A-24*
2024 Demand Volumes Summary	
Intersection 2 - Coors Blvd. / Sequoia Rd.	*A-25 to A-29*
2024 LVAM Summary	
2024 Conditions - LVAM Maps	*A-30 to A-33*
2024 Conditions - LVAM Excel Tables	
Implementation Year 2024 - Synchro Analysis	*A-34 to A-41*
Intersection 1 - Coors Blvd. / Driveway "A"	
Intersection 3 - Coors Blvd. / Driveway "B"	
2024 HCM 6 Analysis - Single Period Analysis	*A-43 to A-45*
2024 HCS Intersection Summary Sheets	
2024 AM Peak NO BUILD Conditions	
2024 PM Peak NO BUILD Conditions	
2024 AM Peak BUILD Conditions	
2024 PM Peak BUILD Conditions	
2034 Turning Movement Counts	
Turning Movement Volumes Summary Sheet	*A-46*
Intersection 1 - Coors Blvd. / Driveway "A"	*A-47 to A-48*
Intersection 3 - Coors Blvd. / Driveway "B"	*A-49 to A-50*
2034 Demand Volumes Summary	
Intersection 2 - Coors Blvd. / Sequoia Rd.	*A-51 to A-55*
2034 LVAM Summary	
2034 Conditions - LVAM Maps	*A-56 to A-59*
2034 Conditions - LVAM Excel Tables	
Implementation Year 2034 - Synchro Analysis	*A-60 to A-67*
Intersection 1 - Coors Blvd. / Driveway "A"	
Intersection 3 - Coors Blvd. / Driveway "B"	
Determination of Warrants	
Deceleration Lane Warrant Analysis	*A-72 to A-75*
Traffic Data	
Traffic Count Data Sheets	*A-76 to A-78*
Traffic Impact Study Scope	*A-79 to A-82*

Global Storage - (3421 Coors Blvd. NW)
Vicinity Map / Study Area

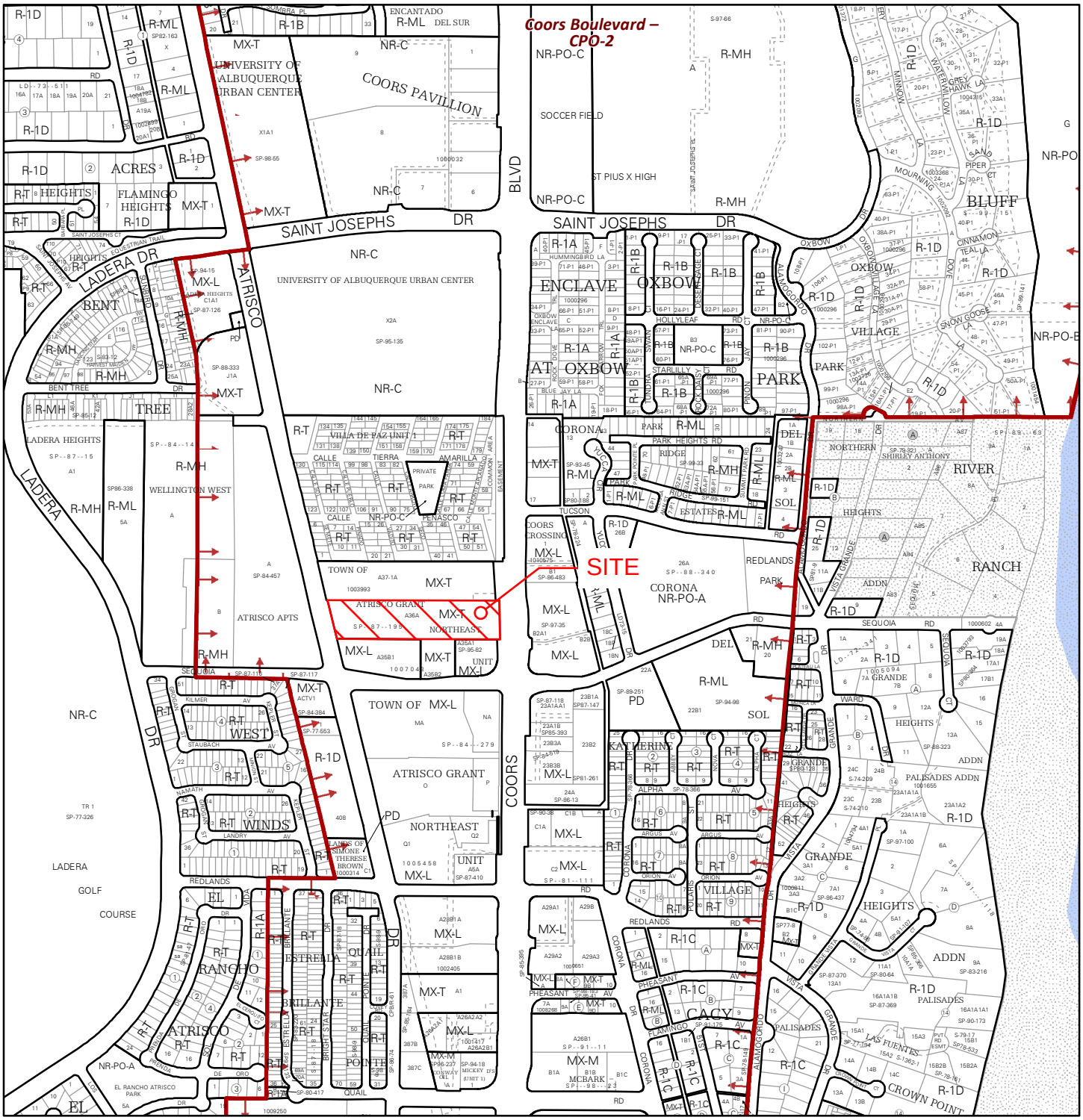

For more details about the Integrated Development Ordinance visit: http://www.cabq.gov/planning/codes-policies-regulations/integrated-development-ordinance

IDO Zone Atlas
May 2018

Albuquerque Geographic Information System

IDO Zoning information as of May 17, 2018

The Zone Districts and Overlay Zones are established by the Integrated Development Ordinance (IDO).

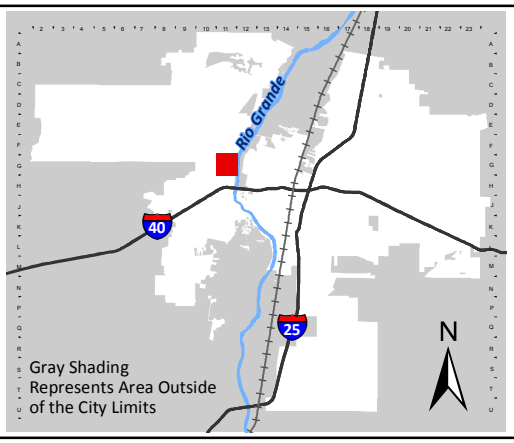

Zone Atlas Page:

G-11-Z

- Easement
- Escarpment
- Petroglyph National Monument
- Areas Outside of City Limits
- Airport Protection Overlay (APO) Zone
- Character Protection Overlay (CPO) Zone
- Historic Protection Overlay (HPO) Zone
- View Protection Overlay (VPO) Zone

Feet: 0 250 500 1000

GENERAL NOTES

1. ROOF-TOP MECHANICAL EQUIPMENT SHALL BE SCREENED.
2. THE MECHANICAL SYSTEMS (HEATING & COOLING) AND BUILDING ENVELOPE (WALLS, ROOF, AND WINDOWS) SHALL BE DESIGNED AND MAINTAINED TO PROMOTE THE EFFICIENT USE OF ENERGY
3. RAINWATER HARVESTING MEASURES, SUCH AS CURB CUTS, SHALL BE PROVIDED.
4. PNM COORDINATION: DEVELOPMENT SHALL ABIDE BY ALL CONDITIONS OR TERMS OF UTILITY EASEMENTS PRIOR TO DEVELOPMENT, CONTACT SHALL BE MADE TP PNM'S NEW SERVICE DELIVERY DEPARTMENT TO COORDINATE ELECTRIC SERVICE AND OPTIONS FOR THE LOCATION OF ELECTRIC SERVICE CONNECTION.
5. SCREENING WILL BE DESIGNED TO ALLOW FOR ACCESS TO ELECTRIC UTILITIES. IT IS NECESSARY TO PROVIDE ADEQUATE CLEARANCE OF TEN FEET IN FRONT, AND AT LEAST FIVE FEET ON THE REMAINING THREE SIDES SURROUNDING ALL GROUND-MOUNTED EQUIPMENT FOR SAFE OPERATION, MAINTENANCE AND REPAIR PURPOSED.
6. LANDSCAPING AND SIGNAGE WILL NOT INTERFERE WITH CLEAR SIGHT REQUIREMENTS. THEREFORE, SIGNS, WALLS, TREES, AND SHRUBBERY BETWEEN 3 AND 8 FEET TALL (AS MEASURED FROM THE GUTTER PAN) WILL NOT BE ACCEPTABLE IN THE AREA.
7. ALL SIDEWALKS, RAMPS, (INCLUDING REQUIRED TRUNCATED DOMES), CURB CUTS, AND CURB AND GUTTER LOCATED WITHIN CITY RIGHT-OF-WAY SHALL BE BUILT PER C.O.A. STANDARD DRAWINGS; SIDEWALK (2430), RAMPS (2440), CURB CUTS (2426), BUS SHELTER (2535/02), CURB AND GUTTER (2415A).
8. ALL IMPROVEMENTS LOCATED IN THE RIGHT-OF-WAY MUST BE INCLUDED ON A PUBLIC WORK ORDER.
9. THE PROPOSED AMENDMENTS TO THE SITE PLAN SHALL MEET THE APPLICABLE DEVELOPMENT REQUIREMENTS SET FORTH IN THE INTEGRATED DEVELOPMENT ORDINANCE (IDO), INCLUDING THOSE OF THE COORS BOULEVARD CHARACTER PROTECTION OVERLAY ZONE (CPO-2), IN LIEU OF THE CITY OF ALBUQUERQUE COMPREHENSIVE ZONING CODE, UNDER WHICH THE APPROVED SITE PLAN WAS DEVELOPED.
10. SETBACKS (14-16-3-4(C)(3), LANDSCAPING (14-16-3-4(C)(5)(c), LIGHTING (14-16-3-4(C)(5)(d), BUILDING DESIGN (14-16-3-4(C)(5)(e), PARKING (14-16-5-5 (C)(2), AND SIGNAGE (14-16-3-4(C)(5)(f) SHALL BE GOVERNED BY THE REQUIREMENTS OF THE INTEGRATED DEVELOPMENT ORDINANCE (IDO) AND THE COORS BOULEVARD CHARACTER PROTECTION OVERLAY ZONE (CPO-2)
11. PROPOSED SELF-STORAGE FACILITY SHALL COMPLY WITH APPLICABLE SUBSECTIONS OF IDO SECTION 4-3(D)(29)(A) SELF-STORAGE USE SPECIFIC STANDARD AS FOLLOWS: ALL STORAGE USE SHALL BE WITHIN THE FULLY ENCLOSED PORTION OF THE BUILDING. SECURITY FENCING SHALL NOT INCLUDE RAZOR WIRE OR BARBED WIRE. PUBLIC ACCESS TO THE STORAGE UNITS IS PROHIBITED BETWEEN 10:00 P.M. AND 7:00 A.M. ANY INTERNAL LIGHTING THAT IS VISIBLE FROM THE PROPERTY LINE SHALL BE DIMMED BY 50% OF THE MAXIMUM FOOT LAMBERTS ALLOWED BETWEEN 10:00 P.M. AND 7:00 A.M. ACCESS TO INDIVIDUAL STORAGE UNITS SHALL BE THROUGH INTERIOR CORRIDORS.
12. BUILDING MATERIALS AND DESIGN OF PROPOSED CONSTRUCTION SHALL COMPLY WITH THE APPLICABLE SUBSECTIONS OF CPO-2 - 14-16-3-4(C)(5)(e). MATERIALS CONTRASTING WITH PREDOMINANT COLOR OF THE BUILDING ARE LIMITED TO <10% OF EACH FACADE AREA. REFER TO ELEVATION DRAWINGS.
13. ROOFTOP MECHANICAL EQUIPMENT SHALL BE SCREENED FROM VIEW, PER REQUIREMENTS OF CPO-2.
14. ANY LIGHTING WILL BE PLACED SO AS TO DIRECT LIGHT AWAY FROM RESIDENTIAL DISTRICTS AND WILL BE FULLY SHIELDED TO COMPLY WITH THE NM NIGHT SKY PROTECTION ACT, IDO SECTION 14-16-5-8 OUTDOOR LIGHTING, AND COORS BOULEVARD CPO-2 SECTION 3-4(C)(5)(D) OUTDOOR LIGHTING, WHICH STIPULATES THE MOUNTING HEIGHT OF LIGHT FIXTURES IN OFF-STREET PARKING, OTHER VEHICULAR USE AREAS, AND/OR OUTDOOR STORAGE AREAS SHALL BE NO HIGHER THAN 20 FEET ABOVE FINISHED GRADE.
15. ON-PREMISES SIGNS SHALL COMPLY WITH COORS BOULEVARD CPO-2 SECTION 3-4(C)(5)(F) SIGNS. THE HEIGHT OF BUILDING-MOUNTED SIGNS SHALL COMPLY WITH THE SIGN STANDARDS IN TABLE 5-12-2, BUT NOT EXCEED THE HEIGHT OF THE BUILDING. PER THE NR-C ZONE & CPO-2, THE MAXIMUM SIGN AREA FOR BUILDING MOUNTED SIGNS SHALL NOT EXCEED 15% OF THE FAÇADE AREA OR 75SF, INCLUSIVE OF DOOR AND WINDOW OPENINGS. REFER TO ELEVATION DRAWINGS.
16. SIDEWALK SLOPES SHALL NOT EXCEED 5%, CROSS SLOPES NOT TO EXCEED 2%. SHOULD SLOPES EXCEED 5%, WALK WILL BE CONSIDERED A RAMP AND BE REQUIRED TO HAVE HANDRAILS ON EACH SIDE AS WELL AS LEVEL LANDINGS AT THE TOP AND BOTTOM OF RAMP FOR A DISTANCE OF 60' BEYOND THE EXTENT OF THE RAMP.
17. ALL SERVICE AREAS SHALL BE SCREENED TO CONCEAL TRASH CONTAINERS, GAS METERS, TRANSFORMERS, BACKFLOW PREVENTERS AND OTHER MECHANICAL OR ELECTRICAL EQUIPMENT FROM EYE LEVEL ADJACENT TO ALL PUBLIC STREETS
18. OWNER IS TO PROVIDE 8YD. WASTE RECEPTACLE AT EXISTING WASTE ENCLOSURE TO HANDLE ADDITIONAL WASTE STREAMS OF PHASE 2 - INDOOR STORAGE FACILITY AND PHASE 3 - BREWERY EXPANSION IF SO REQUIRED BY SOLID WASTE DEPARTMENT.
19. FREE AND CLEAR ACCESS TO WASTE ENCLOSURE TO BE MAINTAINED AT ALL TIMES. PROPOSED SCOPE OF PHASE 2 & PHASE 3 CONSTRUCTION SHALL NOT INTERFERE OR MATERIALLY ALTER ACCESS TO EXISTING ENCLOSURE, PER SOLID WASTE DEPARTMENT.
20. MAJOR AMENDMENT (3/20/2023): REPLACE RV STORAGE AREA AND THE 40,000SF INDOOR STORAGE FACILITY WITH A 150,000SF INDOOR STORAGE FACILITY (PHASE 2) AND A 3,800SF EXPANSION TO EXISTING BREWERY (PHASE 3). EGRESS TO ATRISCO RD. NW MOVED NORTH AND IS MODIFIED FOR EXIT ONLY.

SYMBOL LEGEND

- PARKING BAY COUNT
- ACCESSIBLE PARKING SPACE
- ELECTRICAL TRANSFORMER
- FDC CONNECTION POINT
- FIRE HYDRANT
- POLE MOUNTED EXTERIOR LIGHTING
- CONCRETE PAVING
- PAINTED STRIPING
- EASEMENT LINE
- SETBACK LINE
- PROPERTY LINE
- FENCE LINE
- CONCRETE CONTROL JOINT
- FIRE LANE MARKINGS
- EXISTING CONSTRUCTION
- CLEAR SIGHT TRIANGLE

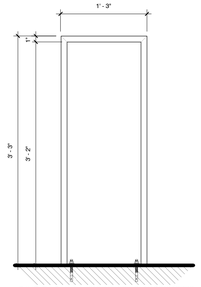

BIKE RACK — BASIS OF DESIGN, MADRAX METRO, ANCHOR MOUNTED INSTALLATION.

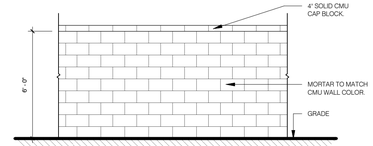

6' CMU BLOCK PERIMETER WALL — 8" X 8" X 16" SPLIT FACE, RUNNING BOND, CMU PERIMETER WALL. MATCH EXISTING.

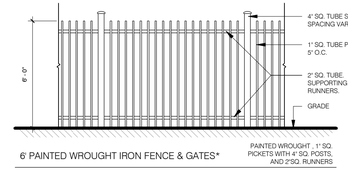

6' PAINTED WROUGHT IRON FENCE & GATES* — PAINTED WROUGHT , 1" SQ. PICKETS WITH 4" SQ. POSTS, AND 2"SQ. RUNNERS

*FENCING TYP. INTERNAL TO PROPERTY AND AT VEHICLE EXIT GATE

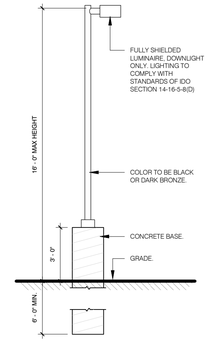

POLE MOUNTED LIGHT FIXTURE

PERMIT REVIEW APPROVALS

SHEET NOTES:

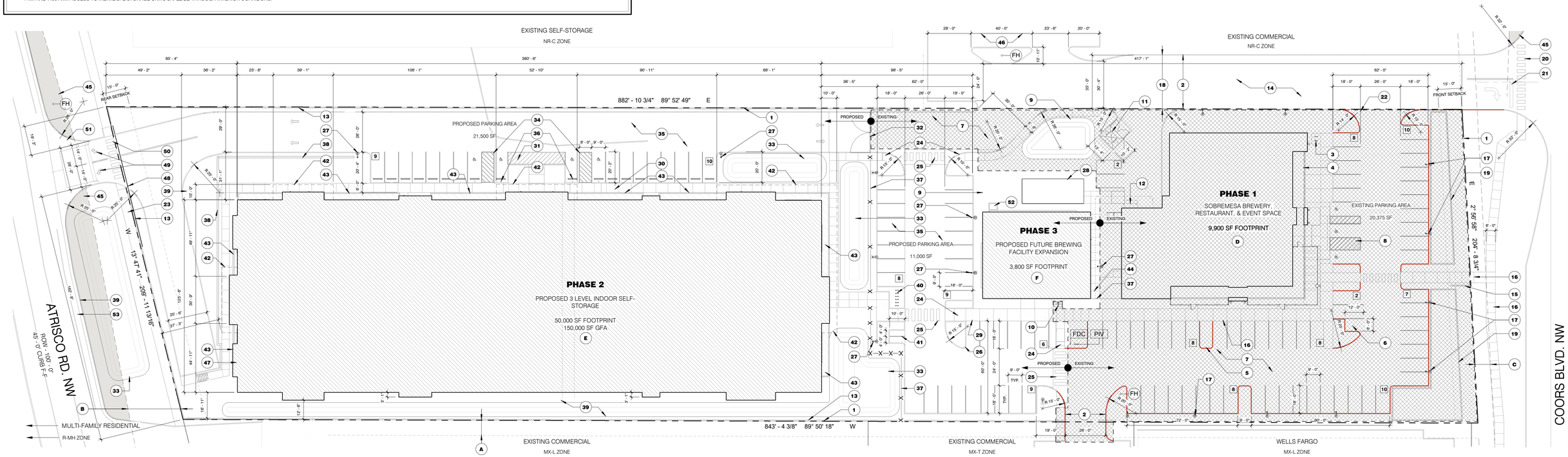

1 AS.1 SITE PLAN - MAJOR AMENDMENT
1" = 30'-0"

0' 15' 30' 60' 120'

PROPERTY INFORMATION — 3421 COORS BLVD. NW - ALBUQUERQUE, NM 87120

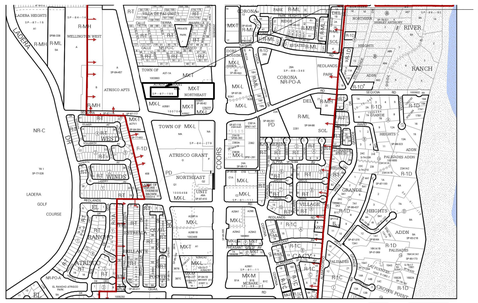

LOCATION MAP — ZONE ATLAS PAGE G-11-Z (MAY 2018)

0 250 500 1000

	PROPOSED PROJECT LOCATION
LEGAL DESCRIPTION	TR A-36-A - TOWN OF ATRISCO GRANT - NE UNIT
LOT SIZE	SITE AREA: 4.04 ACRES (176,180 SF)
PROPERTY ADDRESS	3421 COORS BLVD. NW ALBUQUERQUE, NM 87120
ZONING	NR-C - NON-RESIDENTIAL COMMERCIAL ZONE
LAND USE	INDOOR STORAGE FACILITY, RV STORAGE, MULTI-TENANT OFFICE / COMMERCIAL BUILDING CONDITIONAL USES FOR RESTAURANT, TAPROOM, AND BREWERY, APPROVED BY THE CITY ZONING HEARING EXAMINER ON MARCH 19, 2019 (VA-2018-00228; VA-2018-009125) ALL PROPOSED USES COMPLY WITH ABOVE APPROVALS AND LAND USE DESIGNATIONS
UPC #	10110619520231002
TRANSIT	SITE EXISTS WITHIN THE COORS / I40 ACTIVITY CENTER AND ALONG A MAJOR TRANSIT CORRIDOR.
BUS ROUTES	96 (CROSSTOWN COMMUTER), 155 (COORS) , AND 790 (BLUE LINE RAPID RIDE). SOUTHBOUND BUS STOPS FOR ROUTES 96, 155, AND 790 ARE LOCATED APPROXIMATELY 450' TO THE SOUTH OF THE SITE. NORTHBOUND BUS STOPS FOR ROUTES 96 AND 155 ARE LOCATED ACROSS COORS BLVD APPROXIMATELY 590' TO THE NORTH OF THE SITE.
LIGHTING	LIGHTING SHALL BE FULLY SHIELDED AND CONSISTENT WITH THE COORS CORRIDOR PLAN LIGHTING REGULATIONS. THE HEIGHT OF POLE MOUNTED LIGHTS WILL NOT EXCEED 20'-0" FROM THE GRADE OF PARKING LOT.

PARKING REQUIREMENTS

PROPOSED, PER IDO 14-16-5-5-1

PARKING REQUIREMENTS

- CLUB OR EVENT FACILITY: 1 SPACE/4 SEATS IN MAIN ASSEMBLY AREA = **38 SPACES**
- RESTAURANT/TAPROOM: 8 SPACES/1,000 SF GFA = **48 SPACES**
- ARTISAN MANUFACTURING: 1 SPACE/1,000 SF GFA = **5 SPACES**
- SELF STORAGE: 1 SPACE/3,000 SF GFA = **50 SPACES**
- MINIMUM TOTAL PARKING REQUIRED = **141 SPACES**
- 20% ACTIVITY CENTER PARKING REDUCTION = **28 SPACES**
- 10% REDUCTION FOR BEING WITHIN 330 FEET OF A TRANSIT STOP = **14 SPACES**
- MINIMUM TOTAL PARKING REQUIRED WITH REDUCTIONS APPLIED: **99 SPACES**
- PARKING SPACES PROVIDED: **114 SPACES**
- ADA/HC PARKING SPACES REQUIRED/PROVIDED: **5/7**
- MOTORCYCLE PARKING REQUIRED/PROVIDED: **4/4**
- B/CYCLE SPACES REQUIRED/PROVIDED: **10/14**

KEY NOTES

1. PROPERTY BOUNDARY
2. EXISTING CURB AND GUTTER TO REMAIN.
3. EXISTING BIKE RACKS
4. LINE OF EXISTING ROOF OVERHANG ABOVE
5. EXISTING FIRE LANE MARKINGS
6. EXISTING MOTORCYCLE PARKING
7. EXISTING ASPHALT PAVED DRIVE AISLE AND VEHICLE PARKING
8. EXISTING VAN ACCESSIBLE ADA PARKING
9. EXISTING GRAVEL GROUND COVER
10. EXISTING ELECTRICAL TRANSFORMER.
11. EXISTING TRASH ENCLOSURE USED BY EXISTING BREWERY & RESTAURANT,AND TO BE USED BY PHASE 2 STORAGE FACILITY, AND PHASE 3 BREWERY EXPANSION
12. EXISTING ELECTRICAL PANELS AND BOLLARD.
13. EXISTING 6'-0"H SPLIT FACE CMU PERIMETER WALL. 60' PORTION ALONG WEST ELEVATION TO BE DEMOLISHED AND ADDITIONAL 60' PORTION TO BE FILLED IN DURING PHASE 2 WORK.
14. EXISTING 35'-0" W SHARED ACCESS R.O.W.
15. EXISTING MONUMENT SIGN
16. EXISTING 6'-0" CONCRETE SIDEWALK
17. EXISTING 16'-0"H POLE MOUNTED LIGHTING
18. EXISTING SHARED SITE ACCESS LANE
19. EXISTING FENCED CONCRETE RETENTION BASINS
20. EXISTING CROSSWALK STRIPING.
21. EXISTING TRAFFIC MARKINGS.
22. HATCHED AREA INDICATES EXTENTS OF PHASE 1, EXISTING 9,900SF BREWERY & RESTAURANT DEVELOPMENT
23. EXISTING 6'W CONCRETE SIDEWALK, WITH NEW PORTION OF SIDEWALK AT LOCATION OF DEMOLISHED PHASE I DRIVE AISLE.
24. NEW ADA RAMP WITH TACTILE WARNING STRIP AT LOW SIDE
25. NEW ACCESSIBLE PEDESTRIAN CROSSING. CROSSWALK MARKINGS TO MEET CABQ STANDARD
26. NEW CONCRETE CURB AND GUTTER. SEE GENERAL NOTES
27. NEW POLE LIGHTING ON CONCRETE BASE. SEE GENERAL NOTES
28. NEW WALK-IN COOLER. APPROX.600SF. REFER TO ELEVATIONS.
29. NEW 8'-6"W CONCRETE SIDEWALK
30. NEW 6'-0"W CONCRETE SIDEWALK
31. NEW STRIPED 5 MIN. LOADING / UNLOADING ZONE
32. NEW 28'-0" W SWINGING VEHICULAR ACCESS GATE WITH FDC ACCESS OVERRIDE

KEY NOTES

33. PROPOSED PONDING AREA. REFER TO CIVIL GRADING AND DRAINAGE PLAN.
34. NEW VAN ACCESSIBLE ADA PARKING
35. NEW ASPHALT PAVED DRIVE AISLE AND VEHICLE PARKING
36. STANDARD ADA SIGNAGE AT ACCESSIBLE PARKING SPACES, TYP.
37. NEW 6'-0"H METAL SECURITY FENCE WITH PEDESTRIAN ACCESS GATES.
38. NEW CMU RETAINING WALL. FINAL HEIGHT BY CIVIL, NOT TO EXCEED 6'-0"H
39. PROPOSED LANDSCAPE BUFFER. SEE LANDSCAPE CALCULATIONS & LANDSCAPE PLAN
40. NEW BIKE RACKS
41. NEW MOTORCYCLE PARKING
42. PROPOSED CANOPY OVERHANG AT BUILDING ENTRANCE AND EGRESS DOORS.
43. RAISED SPLIT FACE CMU PLANTER BED AT STRUCTURE, TO MATCH EXISTING PHASE 1 PERIMETER WALL.
44. NEW 10'-0"W CONCRETE SIDEWALK
45. CLEAR SIGHT TRIANGLE, PER DPM REQUIREMENTS. LANDSCAPE & SIGNAGE WILL NOT INTERFERE WITH CLEAR SIGHT REQUIREMENTS.
46. PARKING AREA AT ADJACENT BUSINESS
47. PROPOSED ILLUMINATED BUSINESS WALL SIGNAGE. TO COMPLY WITH REQUIREMENTS OF IDO TABLE 5-12-2 - SEE SIGNAGE CALCULATIONS, THIS SHEET
48. POWERED 6'H ROLLING GATE W/ FIRE DEPT. EMERGENCY OVERRIDE.
49. LEFT / RIGHT PAINTED DIRECTIONAL TURN ARROWS, PER CABQ STANDARDS. NO ENTRY TO SITE FROM ATRISCO, EXIT ONLY.
50. PROPOSED CROSSWALK STRIPING AT NEW DRIVE AISLE.
51. PROPOSED LOCATION OF RELOCATED, EXIT ONLY DRIVE AISLE.
52. GROUND MOUNTED PACKAGED MECHANICAL UNIT
53. 6'W BIKE LANE, MODIFY STRIPING AT NEW VEHICLE EXIT DRIVE.

A EXISTING 10' UNDERGROUND PNM EASEMENT
B EXISTING 50' PNM EASEMENT
C EXISTING 10' PNM & MOUNTAIN BELL EASEMENT
D PHASE 1 SCOPE - EXISTING 9,900 SF BREWING FACILITY AND RESTAURANT, ASSOCIATED PARKING, SITE INFRASTRUCTURE AND LANDSCAPING
E PHASE 2 SCOPE - PROPOSED 3 LEVEL150,000 SF INDOOR CLIMATE CONTROLLED STORAGE, ASSOCIATED PARKING, SITE INFRASTRUCTURE, LANDSCAPING, AND CONCRETE FLATWORK. SEE ELEVATIONS.
F PHASE 3 SCOPE - PROPOSED 3,800 SF BREWING FACILITY EXPANSION AND ASSOCIATED SITE INFRASTRUCTURE INCLUDING: BREWERY BUILDING & NEW 8'W ACCESS SIDEWALKS - ALL PARKING REQUIREMENTS MET OR EXCEEDED BY PHASE 2 WORK. SEE ELEVATIONS.

SITE PLAN AMENDMENT MAJOR - SIGNATURES:

PROJECT NUMBER: *PR-2018-001192*

APPLICATION CASE NUMBER: *SI-2023-00512*

THIS PLAN IS CONSISTENT WITH THE SPECIFIC SITE DEVELOPMENT PLAN APPROVED BY THE ENVIRONMENTAL PLANNING COMMISSION (EPC), DATED 4/20/2023 AND THE FINDINGS AND CONDITIONS IN THE OFFICIAL NOTIFICATION OF DECISION ARE SATISFIED.

INFRASTRUCTURE LIST REQUIRED: ( ) YES, (**X**) NO

IF YES, THEN A SET OF APPROVED DRC PLANS WITH A WORK ORDER FOR ANY CONSTRUCTION WITHIN PUBLIC RIGHT OF WAY OR FOR CONSTRUCTION OF PUBLIC IMPROVEMENTS.

DFT SITE DEVELOPMENT PLAN APPROVAL:

TRANSPORTATION DIVISION	DATE:
WATER AUTHORITY (ABCWUA)	DATE:
PARKS & RECREATION DEPARTMENT	DATE:
HYDROLOGY	DATE:
CODE ENFORCEMENT	DATE:
**ENVIRONMENTAL HEALTH DEPARTMENT (CONDITIONAL)*	DATE:
SOLID WASTE MANAGEMENT	DATE:
PLANNING DEPARTMENT	DATE:

REVISIONS:

Revision #	Revision Description	Revision Date

STATE OF NEW MEXICO — CHRISTOPHER ERIC BECCONE — No. 5078 — 01 May 2023 — REGISTERED ARCHITECT

GLOBAL STORAGE - COORS
3421 COORS BLVD. NW
Albuquerque, NM 87120

MODULUS DESIGN LLC.
912 Broadway Blvd. NE
Albuquerque, NM 87102

P 505.842.0354
F 505.243.3669

AS.1

SITE PLAN - 3421 COORS - MAJOR AMENDMENT

PHASE: PLANNING & ZONING

Global Storage (Coors / Sequoia)

Trip Generation Data (ITE Trip Generation Manual - 11th Edition)

USE (ITE CODE)		24 HR VOL	A. M. PEAK HR.		P. M. PEAK HR.		
DESCRIPTION		*GROSS*	*ENTER*	*EXIT*	*ENTER*	*EXIT*	
Summary Sheet	Units						
Mini-Warehousing (151)	150.00	218	8	6	11	12	1
High Turnover (Sit-Down) Restaurant (932)	9.90	1,061	52	43	55	35	2
Brewery Tap Room (971)	3.80	234	2	-	22	15	3
Subotal - Total Project (Including Existing uses)		1,513	62	49	88	62	
Campground / RV Park (416)	2.20	-	-	1	1	1	4
High Turnover (Sit-Down) Restaurant (932)	9.80	1,051	52	42	54	35	5
Subtotal - Existing Uses		1,051	52	43	55	36	
New Trips		**462**	**10**	**6**	**33**	**26**	

Land Use: 151
Mini-Warehouse

Description

A mini-warehouse is a building in which a number of storage units or vaults are rented for the storage of goods. They are typically referred to as “self-storage” facilities. Each unit is physically separated from other units, and access is usually provided through an overhead door or other common access point.

Additional Data

The technical appendices provide supporting information on time-of-day distributions for this land use. The appendices can be accessed through either the ITETripGen web app or the trip generation resource page on the ITE website (https://www.ite.org/technical-resources/topics/trip-and-parking-generation/).

The sites were surveyed in the 1980s, the 1990s, the 2000s, and the 2010s in California, Colorado, Massachusetts, Minnesota, Nevada, New Jersey, Texas, and Utah.

Source Numbers

212, 403, 551, 568, 642, 708, 724, 850, 868, 876, 1024, 1035

Land Use: 932
High-Turnover (Sit-Down) Restaurant

Description

This land use consists of sit-down, full-service eating establishments with a typical duration of stay of 60 minutes or less. This type of restaurant is usually moderately priced, frequently belongs to a restaurant chain, and is commonly referred to as casual dining. Generally, these restaurants serve lunch and dinner; they may also be open for breakfast and are sometimes open 24 hours a day. These restaurants typically do not accept reservations. A patron commonly waits to be seated, is served by wait staff, orders from a menu, and pays after the meal.

Some facilities offer carry-out for a small proportion of its customers. Some facilities within this land use may also contain a bar area for serving food and alcoholic drinks.

Fast casual restaurant (Land Use 930), fine dining restaurant (Land Use 931), fast-food restaurant without drive-through window (Land Use 933), and fast-food restaurant with drive-through window (Land Use 934) are related uses.

Additional Data

Users should exercise caution when applying statistics during the AM peak periods, as the sites contained in the database for this land use may or may not be open for breakfast. In cases where it was confirmed that the sites were not open for breakfast, data for the AM peak hour of the adjacent street traffic were removed from the database.

If the restaurant has outdoor seating, its area is not included in the overall gross floor area. For a restaurant that has significant outdoor seating, the number of seats may be more reliable than GFA as an independent variable on which to establish a trip generation rate.

The technical appendices provide supporting information on time-of-day distributions for this land use. The appendices can be accessed through either the ITETripGen web app or the trip generation resource page on the ITE website (https://www.ite.org/technical-resources/topics/trip-and-parking-generation/).

The sites were surveyed in the 1980s, the 1990s, the 2000s, and the 2010s in Alberta (CAN), California, Florida, Georgia, Indiana, Kentucky, Massachusetts, Minnesota, New Hampshire, New Jersey, New York, Ohio, Oklahoma, Oregon, Pennsylvania, South Carolina, South Dakota, Texas, Vermont, and Wisconsin.

Source Numbers

126, 269, 275, 280, 300, 301, 305, 338, 340, 341, 358, 384, 424, 432, 437, 438, 444, 507, 555, 577, 589, 617, 618, 728, 868, 884, 885, 903, 927, 939, 944, 961, 962, 977, 1048

Land Use: 971
Brewery Tap Room

Description

A brewery tap room is a designated area found in conjunction with a brewery in which customers can try samples of a brewery's products. These rooms are typically located on-site and can be used as a way to sell beer or related products directly to the customer. Depending on its size, a tap room can also be used to house social gatherings. A brewery tap room may also be used to facilitate complimentary tours of the brewery.

Additional Data

For the purposes of this land use, the independent variable "1,000 sq. foot gross floor area" refers to the square footage of the building that houses the tap room.

The technical appendices provide supporting information on time-of-day distributions for this land use. The appendices can be accessed through either the ITETripGen web app or the trip generation resource page on the ITE website (https://www.ite.org/technical-resources/topics/trip-and-parking-generation/).

The sites were surveyed in the 2010s in Florida and Minnesota.

Source Numbers

1047, 1053

Land Use: 416
Campground/Recreational Vehicle Park

Description

A campground/recreational vehicle park is a recreational site that accommodates campers, trailers, tents, and recreational vehicles on a transient basis. They are found in a variety of locations and provide a variety of facilities, often including restrooms with showers and recreational facilities, such as a swimming pool, convenience store, and laundromat.

Additional Data

The sites were surveyed in the 1990s, the 2000s, and the 2010s in Rhode Island, Vermont, and Washington.

Source Numbers

401, 559, 728

Historic Growth Data Table

Global Storage

(Coors / Sequoia)

Traffic Flows (AWDT) from Mid-Region Council of Governments

COG ID	Location	Coors and Sequoia												
Intersection #1:	**SEQUOIA / COORS**													
	Street:	**From:**	**2010**	**2011**	**2012**	**2013**	**2014**	**2015**	**2016**	**2017**	**2018**	**2019**	**2020**	**2021**
22100	SEQUOIA	EAST OF ATRISCO - WEST OF COORS	7,916	7,781	7,246	7,188	7,217	7,663	7,793	7,968	7,163	7,376	5,876	6,912
21912	COORS	NORTH OF SEQUOIA - SOUTH OF ST. JOSEPHS	43,528	42,788	49,302	50,652	50,855	51,669	46,561	47,606	48,408	49,888	39,812	47,272
22243	COORS	NORTH OF REDLANDS - SOUTH OF SEQUOIA	55,247	52,731	52,204	51,786	58,945	59,888	60,906	55,070	55,998	57,659	45,933	53,005
	Total Intersection Traffic Flows		**106,691**	**103,300**	**108,752**	**109,626**	**117,017**	**119,220**	**115,260**	**110,644**	**111,569**	**114,923**	**91,621**	**107,189**

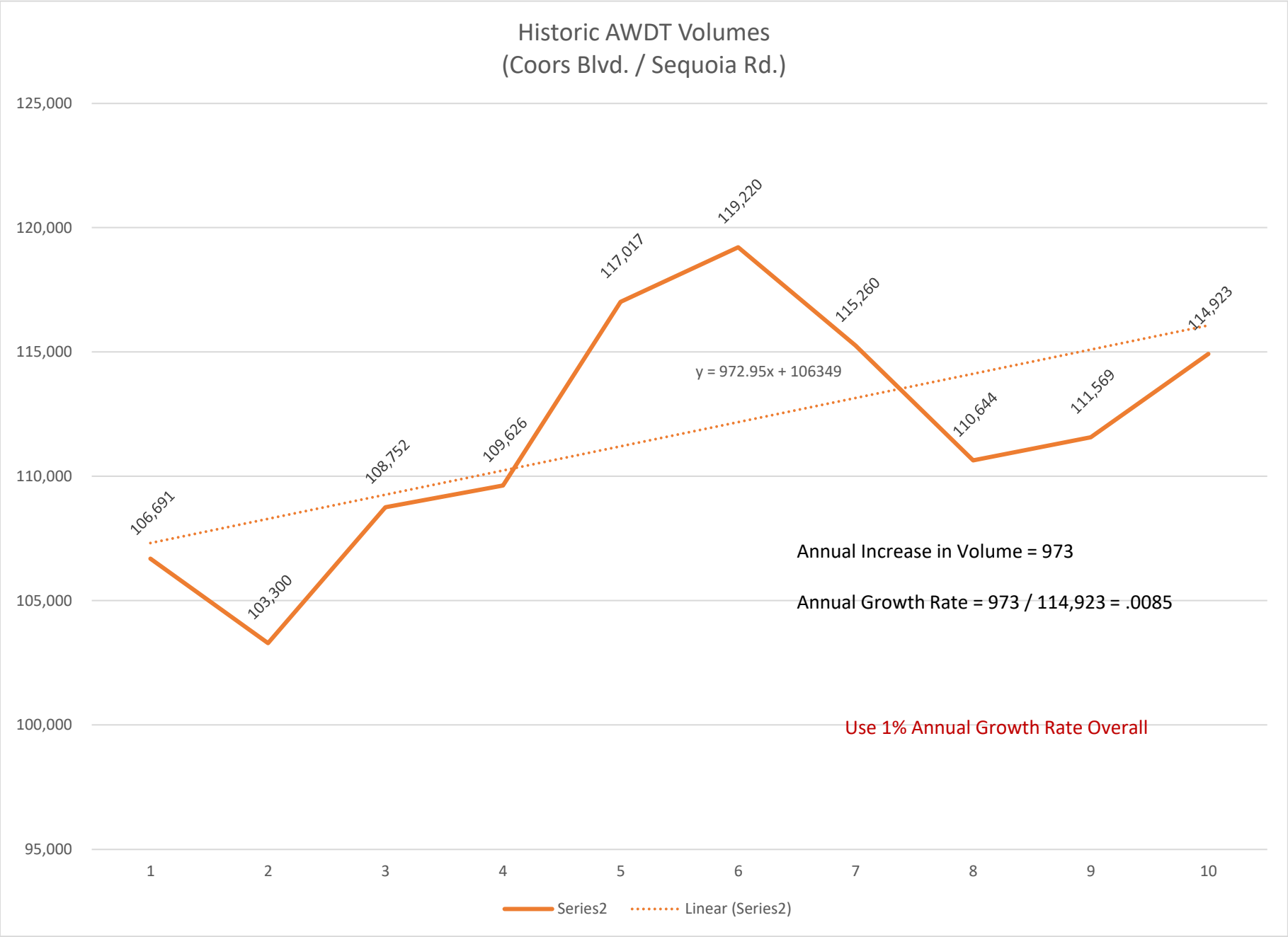
Historic AWDT Volumes
(Coors Blvd. / Sequoia Rd.)
125,000
120,000
115,000
110,000
105,000
100,000
95,000
1
2
3
4
5
6
7
8
9
10
106,691
103,300
108,752
109,626
117,017
119,220
115,260
110,644
111,569
114,923
y = 972.95x + 106349
Annual Increase in Volume = 973
Annual Growth Rate = 973 / 114,923 = .0085
Use 1% Annual Growth Rate Overall
Series2
Linear (Series2)

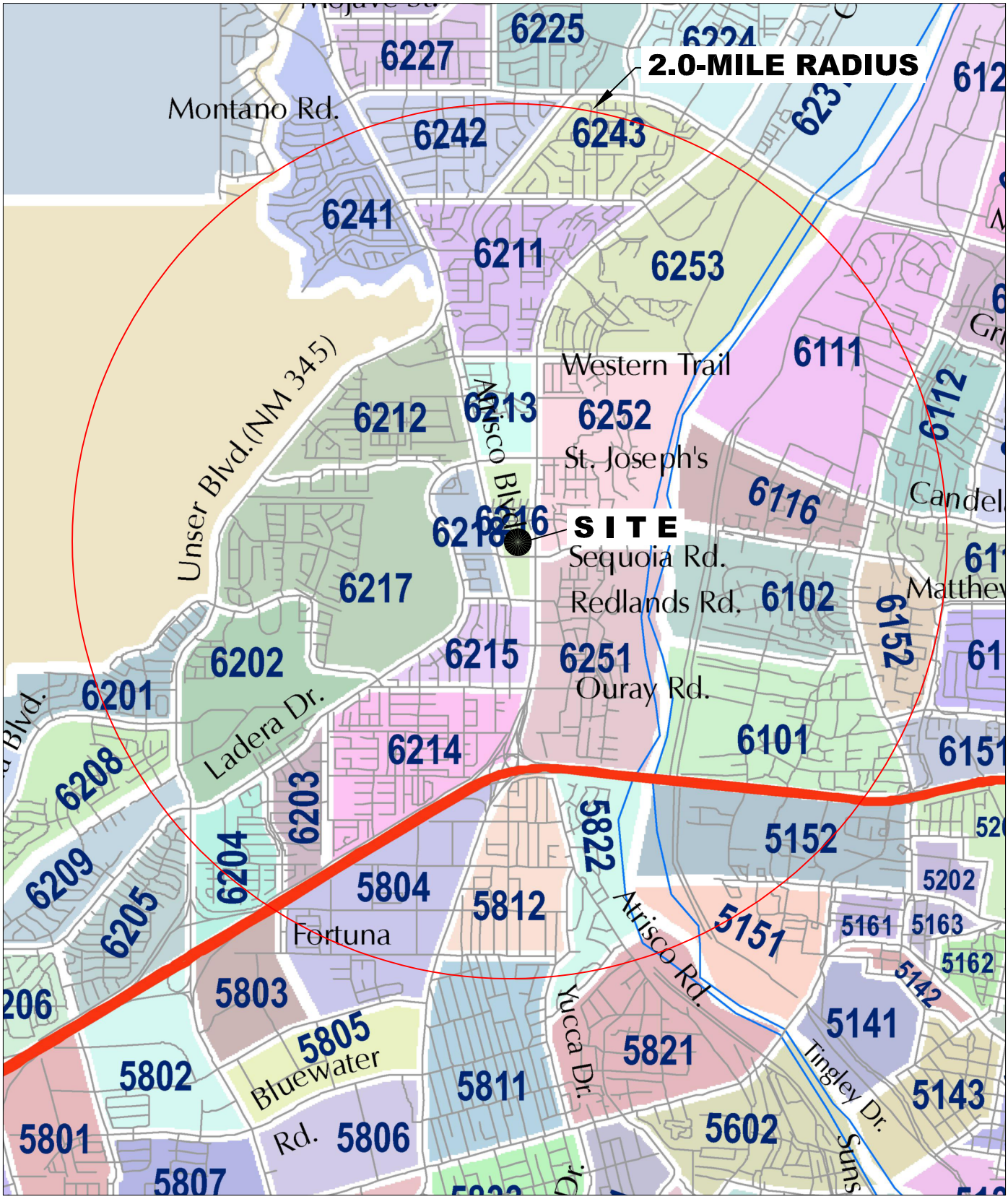

DATA ANALYSIS SUBZONE (DASZ) MAP

Global Storage (Coors & Sequoia)

Trip Distribution Table

Global Storage (Coors & Sequoia)

Data Analysis Subzone Population Data for determination of Local Trip Distribution for Proposed **Retail Commercial Trips**

2016 and 2040 Data Taken from Mid-Region Council of Governments'
2040 Socioeconomic Forecasts by Data Analysis Subzones for the Mid-Region of New Mexico

							(CN) Coors Blvd. North			(SE) Sequoia Rd. East			Co
DASZ #	% Sub Area in Study	2016 Population	2040 Population	Interpolated Population for the Year	**Population in Study**	**Percent Population**	% Utilizing	% Population Utilizing	Population	% Utilizing	% Population Utilizing	Population	% Utilizing
		2016	**2040**	**2024**									
Boundary Specified on DASZ Map													
6241	65%	2409	2303	2,374	1,543	**3.40%**	**90%**	3.06%	1,389	0%	0.00%	0	0%
6242	85%	1829	1927	1,862	1,583	**3.49%**	**90%**	3.14%	1,425	0%	0.00%	0	0%
6243	80%	2144	2198	2,162	1,730	**3.82%**	**100%**	3.82%	1,730	0%	0.00%	0	0%
6211	100%	2611	2655	2,626	2,626	**5.79%**	**100%**	5.79%	2,626	0%	0.00%	0	0%
6253	95%	1167	1979	1,438	1,366	**3.01%**	**100%**	3.01%	1,366	0%	0.00%	0	0%
6314	20%	0	1	0	0	**0.00%**	0%	0.00%	0	0%	0.00%	0	0%
6212	100%	2252	2371	2,292	2,292	**5.06%**	**10%**	0.51%	229	0%	0.00%	0	0%
6213	100%	551	589	564	564	**1.24%**	**90%**	1.12%	508	0%	0.00%	0	0%
6252	100%	1433	1534	1,467	1,467	**3.24%**	**70%**	2.27%	1,027	**30%**	0.97%	440	0%
6111	80%	1154	1408	1,239	991	**2.19%**	**100%**	2.19%	991	0%	0.00%	0	0%
6116	100%	695	959	783	783	**1.73%**	**100%**	1.73%	783	0%	0.00%	0	0%
6112	40%	980	1364	1,108	443	**0.98%**	**100%**	0.98%	443	0%	0.00%	0	0%
6115	30%	1087	1512	1,229	369	**0.81%**	**100%**	0.81%	369	0%	0.00%	0	0%
6217	100%	2576	2630	2,594	2,594	**5.72%**	0%	0.00%	0	0%	0.00%	0	**70%**
6218	100%	2103	2491	2,232	2,232	**4.92%**	0%	0.00%	0	0%	0.00%	0	0%
6215	100%	1780	1744	1,768	1,768	**3.90%**	0%	0.00%	0	0%	0.00%	0	**50%**
6216	100%	316	424	352	352	**0.78%**	0%	0.00%	0	0%	0.00%	0	0%
6251	100%	1881	2484	2,082	2,082	**4.59%**	0%	0.00%	0	0%	0.00%	0	**100%**
6102	100%	1374	1759	1,502	1,502	**3.31%**	0%	0.00%	0	0%	0.00%	0	**100%**
6101	90%	2169	2906	2,415	2,174	**4.80%**	0%	0.00%	0	0%	0.00%	0	**100%**
6152	100%	822	1191	945	945	**2.08%**	0%	0.00%	0	0%	0.00%	0	**100%**
6151	5%	1535	1955	1,675	84	**0.19%**	0%	0.00%	0	0%	0.00%	0	**100%**
6201	50%	1382	1914	1,559	780	**1.72%**	0%	0.00%	0	0%	0.00%	0	0%
6208	15%	2499	3258	2,752	413	**0.91%**	0%	0.00%	0	0%	0.00%	0	0%
6209	10%	1641	1441	1,574	157	**0.35%**	0%	0.00%	0	0%	0.00%	0	0%
6205	5%	2227	1913	2,122	106	**0.23%**	0%	0.00%	0	0%	0.00%	0	0%
6204	65%	1827	1645	1,766	1,148	**2.53%**	0%	0.00%	0	0%	0.00%	0	**85%**
6203	100%	861	1047	923	923	**2.04%**	0%	0.00%	0	0%	0.00%	0	**85%**
6202	100%	1388	1446	1,407	1,407	**3.10%**	0%	0.00%	0	0%	0.00%	0	0%
6214	100%	3560	3480	3,533	3,533	**7.79%**	0%	0.00%	0	0%	0.00%	0	**85%**
5804	80%	2853	3047	2,918	2,334	**5.15%**	0%	0.00%	0	0%	0.00%	0	**100%**
5151	30%	834	761	810	243	**0.54%**	0%	0.00%	0	0%	0.00%	0	**100%**
5152	75%	1052	1821	1,308	981	**2.16%**	0%	0.00%	0	0%	0.00%	0	**100%**
5821	5%	1953	2055	1,987	99	**0.22%**	0%	0.00%	0	0%	0.00%	0	**100%**
5822	95%	1046	1412	1,168	1,110	**2.45%**	0%	0.00%	0	0%	0.00%	0	**100%**
5812	100%	2217	2102	2,179	2,179	**4.81%**	0%	0.00%	0	0%	0.00%	0	**100%**
5811	10%	4234	4170	4,213	421	**0.93%**	0%	0.00%	0	0%	0.00%	0	**100%**
				64,928	45,324	100.00%			**12,885**			**440**	
									28.43%			0.97%	

Trip Distribution Table

Global Storage (Coors & Sequoia)

Data Analysis Subzone Population Data for determination of Local Trip Distribution for Proposed **Retail Commercial**

2016 and 2040 Data Taken from Mid-Region Council of Governments'
2040 Socioeconomic Forecasts by Data Analysis Subzones for the Mid-Region of New Mexico

							(CS) ors Blvd. South	
DASZ #	% Sub Area in Study	2016 Population	2040 Population	Interpolated Population for the Year	**Population in Study**	**Percent Population**	% Population Utilizing	Population
		2016	**2040**	**2024**				
Boundary Specified on DASZ Map								
6241	65%	2409	2303	2,374	1,543	**3.40%**	0.00%	0
6242	85%	1829	1927	1,862	1,583	**3.49%**	0.00%	0
6243	80%	2144	2198	2,162	1,730	**3.82%**	0.00%	0
6211	100%	2611	2655	2,626	2,626	**5.79%**	0.00%	0
6253	95%	1167	1979	1,438	1,366	**3.01%**	0.00%	0
6314	20%	0	1	0	0	**0.00%**	0.00%	0
6212	100%	2252	2371	2,292	2,292	**5.06%**	0.00%	0
6213	100%	551	589	564	564	**1.24%**	0.00%	0
6252	100%	1433	1534	1,467	1,467	**3.24%**	0.00%	0
6111	80%	1154	1408	1,239	991	**2.19%**	0.00%	0
6116	100%	695	959	783	783	**1.73%**	0.00%	0
6112	40%	980	1364	1,108	443	**0.98%**	0.00%	0
6115	30%	1087	1512	1,229	369	**0.81%**	0.00%	0
6217	100%	2576	2630	2,594	2,594	**5.72%**	4.01%	1,816
6218	100%	2103	2491	2,232	2,232	**4.92%**	0.00%	0
6215	100%	1780	1744	1,768	1,768	**3.90%**	1.95%	884
6216	100%	316	424	352	352	**0.78%**	0.00%	0
6251	100%	1881	2484	2,082	2,082	**4.59%**	4.59%	2,082
6102	100%	1374	1759	1,502	1,502	**3.31%**	3.31%	1,502
6101	90%	2169	2906	2,415	2,174	**4.80%**	4.80%	2,174
6152	100%	822	1191	945	945	**2.08%**	2.08%	945
6151	5%	1535	1955	1,675	84	**0.19%**	0.19%	84
6201	50%	1382	1914	1,559	780	**1.72%**	0.00%	0
6208	15%	2499	3258	2,752	413	**0.91%**	0.00%	0
6209	10%	1641	1441	1,574	157	**0.35%**	0.00%	0
6205	5%	2227	1913	2,122	106	**0.23%**	0.00%	0
6204	65%	1827	1645	1,766	1,148	**2.53%**	2.15%	976
6203	100%	861	1047	923	923	**2.04%**	1.73%	785
6202	100%	1388	1446	1,407	1,407	**3.10%**	0.00%	0
6214	100%	3560	3480	3,533	3,533	**7.79%**	6.63%	3,003
5804	80%	2853	3047	2,918	2,334	**5.15%**	5.15%	2,334
5151	30%	834	761	810	243	**0.54%**	0.54%	243
5152	75%	1052	1821	1,308	981	**2.16%**	2.16%	981
5821	5%	1953	2055	1,987	99	**0.22%**	0.22%	99
5822	95%	1046	1412	1,168	1,110	**2.45%**	2.45%	1,110
5812	100%	2217	2102	2,179	2,179	**4.81%**	4.81%	2,179
5811	10%	4234	4170	4,213	421	**0.93%**	0.93%	421
				64,928	45,324	100.00%		**21,617**
								47.69%

Trip Distribution Table

Global Storage (Coors & Sequoia)

Data Analysis Subzone Population Data for determination of Local Trip Distribution for Proposed **Retail Commercial**

2016 and 2040 Data Taken from Mid-Region Council of Governments'
2040 Socioeconomic Forecasts by Data Analysis Subzones for the Mid-Region of New Mexico

							(SW) Sequoia Rd. West			(DA) Driveway "A"			
DASZ #	% Sub Area in Study	2016 Population	2040 Population	Interpolated Population for the Year	**Population in Study**	**Percent Population**	% Utilizing	% Population Utilizing	Population	% Utilizing	% Population Utilizing	Population	% Utilizing
		2016	**2040**	**2024**									
Boundary Specified on DASZ Map													
6241	65%	2409	2303	2,374	1,543	**3.40%**	**10%**	0.34%	154	0%	0.00%	0	0%
6242	85%	1829	1927	1,862	1,583	**3.49%**	**10%**	0.35%	158	0%	0.00%	0	0%
6243	80%	2144	2198	2,162	1,730	**3.82%**	0%	0.00%	0	0%	0.00%	0	0%
6211	100%	2611	2655	2,626	2,626	**5.79%**	0%	0.00%	0	0%	0.00%	0	0%
6253	95%	1167	1979	1,438	1,366	**3.01%**	0%	0.00%	0	0%	0.00%	0	0%
6314	20%	0	1	0	0	**0.00%**	**100%**	0.00%	0	0%	0.00%	0	0%
6212	100%	2252	2371	2,292	2,292	**5.06%**	**90%**	4.55%	2,063	0%	0.00%	0	0%
6213	100%	551	589	564	564	**1.24%**	**10%**	0.12%	56	0%	0.00%	0	0%
6252	100%	1433	1534	1,467	1,467	**3.24%**	0%	0.00%	0	0%	0.00%	0	0%
6111	80%	1154	1408	1,239	991	**2.19%**	0%	0.00%	0	0%	0.00%	0	0%
6116	100%	695	959	783	783	**1.73%**	0%	0.00%	0	0%	0.00%	0	0%
6112	40%	980	1364	1,108	443	**0.98%**	0%	0.00%	0	0%	0.00%	0	0%
6115	30%	1087	1512	1,229	369	**0.81%**	0%	0.00%	0	0%	0.00%	0	0%
6217	100%	2576	2630	2,594	2,594	**5.72%**	**30%**	1.72%	778	0%	0.00%	0	0%
6218	100%	2103	2491	2,232	2,232	**4.92%**	**100%**	4.92%	2,232	0%	0.00%	0	0%
6215	100%	1780	1744	1,768	1,768	**3.90%**	**50%**	1.95%	884	0%	0.00%	0	0%
6216	100%	316	424	352	352	**0.78%**	**90%**	0.70%	317	**5%**	0.04%	18	**5%**
6251	100%	1881	2484	2,082	2,082	**4.59%**	0%	0.00%	0	0%	0.00%	0	0%
6102	100%	1374	1759	1,502	1,502	**3.31%**	0%	0.00%	0	0%	0.00%	0	0%
6101	90%	2169	2906	2,415	2,174	**4.80%**	0%	0.00%	0	0%	0.00%	0	0%
6152	100%	822	1191	945	945	**2.08%**	0%	0.00%	0	0%	0.00%	0	0%
6151	5%	1535	1955	1,675	84	**0.19%**	0%	0.00%	0	0%	0.00%	0	0%
6201	50%	1382	1914	1,559	780	**1.72%**	**100%**	1.72%	780	0%	0.00%	0	0%
6208	15%	2499	3258	2,752	413	**0.91%**	**100%**	0.91%	413	0%	0.00%	0	0%
6209	10%	1641	1441	1,574	157	**0.35%**	**100%**	0.35%	157	0%	0.00%	0	0%
6205	5%	2227	1913	2,122	106	**0.23%**	**100%**	0.23%	106	0%	0.00%	0	0%
6204	65%	1827	1645	1,766	1,148	**2.53%**	**15%**	0.38%	172	0%	0.00%	0	0%
6203	100%	861	1047	923	923	**2.04%**	**15%**	0.31%	138	0%	0.00%	0	0%
6202	100%	1388	1446	1,407	1,407	**3.10%**	**100%**	3.10%	1,407	0%	0.00%	0	0%
6214	100%	3560	3480	3,533	3,533	**7.79%**	**15%**	1.17%	530	0%	0.00%	0	0%
5804	80%	2853	3047	2,918	2,334	**5.15%**	0%	0.00%	0	0%	0.00%	0	0%
5151	30%	834	761	810	243	**0.54%**	0%	0.00%	0	0%	0.00%	0	0%
5152	75%	1052	1821	1,308	981	**2.16%**	0%	0.00%	0	0%	0.00%	0	0%
5821	5%	1953	2055	1,987	99	**0.22%**	0%	0.00%	0	0%	0.00%	0	0%
5822	95%	1046	1412	1,168	1,110	**2.45%**	0%	0.00%	0	0%	0.00%	0	0%
5812	100%	2217	2102	2,179	2,179	**4.81%**	0%	0.00%	0	0%	0.00%	0	0%
5811	10%	4234	4170	4,213	421	**0.93%**	0%	0.00%	0	0%	0.00%	0	0%
				64,928	45,324	100.00%			**10,346**			**18**	
									22.83%			0.04%	

Trip Distribution Table

Global Storage (Coors & Sequoia)

Data Analysis Subzone Population Data for determination of Local Trip Distribution for Proposed **Retail Commercial**

2016 and 2040 Data Taken from Mid-Region Council of Governments'
2040 Socioeconomic Forecasts by Data Analysis Subzones for the Mid-Region of New Mexico

							(DB) Driveway "B"	
DASZ #	% Sub Area in Study	2016 Population	2040 Population	Interpolated Population for the Year	**Population in Study**	**Percent Population**	% Population Utilizing	Population
		2016	**2040**	**2024**				
Boundary Specified on DASZ Map								
6241	65%	2409	2303	2,374	1,543	**3.40%**	0.00%	0
6242	85%	1829	1927	1,862	1,583	**3.49%**	0.00%	0
6243	80%	2144	2198	2,162	1,730	**3.82%**	0.00%	0
6211	100%	2611	2655	2,626	2,626	**5.79%**	0.00%	0
6253	95%	1167	1979	1,438	1,366	**3.01%**	0.00%	0
6314	20%	0	1	0	0	**0.00%**	0.00%	0
6212	100%	2252	2371	2,292	2,292	**5.06%**	0.00%	0
6213	100%	551	589	564	564	**1.24%**	0.00%	0
6252	100%	1433	1534	1,467	1,467	**3.24%**	0.00%	0
6111	80%	1154	1408	1,239	991	**2.19%**	0.00%	0
6116	100%	695	959	783	783	**1.73%**	0.00%	0
6112	40%	980	1364	1,108	443	**0.98%**	0.00%	0
6115	30%	1087	1512	1,229	369	**0.81%**	0.00%	0
6217	100%	2576	2630	2,594	2,594	**5.72%**	0.00%	0
6218	100%	2103	2491	2,232	2,232	**4.92%**	0.00%	0
6215	100%	1780	1744	1,768	1,768	**3.90%**	0.00%	0
6216	100%	316	424	352	352	**0.78%**	0.04%	18
6251	100%	1881	2484	2,082	2,082	**4.59%**	0.00%	0
6102	100%	1374	1759	1,502	1,502	**3.31%**	0.00%	0
6101	90%	2169	2906	2,415	2,174	**4.80%**	0.00%	0
6152	100%	822	1191	945	945	**2.08%**	0.00%	0
6151	5%	1535	1955	1,675	84	**0.19%**	0.00%	0
6201	50%	1382	1914	1,559	780	**1.72%**	0.00%	0
6208	15%	2499	3258	2,752	413	**0.91%**	0.00%	0
6209	10%	1641	1441	1,574	157	**0.35%**	0.00%	0
6205	5%	2227	1913	2,122	106	**0.23%**	0.00%	0
6204	65%	1827	1645	1,766	1,148	**2.53%**	0.00%	0
6203	100%	861	1047	923	923	**2.04%**	0.00%	0
6202	100%	1388	1446	1,407	1,407	**3.10%**	0.00%	0
6214	100%	3560	3480	3,533	3,533	**7.79%**	0.00%	0
5804	80%	2853	3047	2,918	2,334	**5.15%**	0.00%	0
5151	30%	834	761	810	243	**0.54%**	0.00%	0
5152	75%	1052	1821	1,308	981	**2.16%**	0.00%	0
5821	5%	1953	2055	1,987	99	**0.22%**	0.00%	0
5822	95%	1046	1412	1,168	1,110	**2.45%**	0.00%	0
5812	100%	2217	2102	2,179	2,179	**4.81%**	0.00%	0
5811	10%	4234	4170	4,213	421	**0.93%**	0.00%	0
				64,928	45,324	100.00%		**18**
								0.04%

Trip Distribution Table

Global Storage (Coors & Sequoia)

Data Analysis Subzone Population Data for determination of Local Trip Distribution for Proposed **Retail Commercial**

2016 and 2040 Data Taken from Mid-Region Council of Governments'
2040 Socioeconomic Forecasts by Data Analysis Subzones for the Mid-Region of New Mexico

DASZ #	% Sub Area in Study	2016 Population	2040 Population	Interpolated Population for the Year	Population in Study	Percent Population
		2016	**2040**	**2024**		
Boundary Specified on DASZ Map						
6241	65%	2409	2303	2,374	1,543	**3.40%**
6242	85%	1829	1927	1,862	1,583	**3.49%**
6243	80%	2144	2198	2,162	1,730	**3.82%**
6211	100%	2611	2655	2,626	2,626	**5.79%**
6253	95%	1167	1979	1,438	1,366	**3.01%**
6314	20%	0	1	0	0	**0.00%**
6212	100%	2252	2371	2,292	2,292	**5.06%**
6213	100%	551	589	564	564	**1.24%**
6252	100%	1433	1534	1,467	1,467	**3.24%**
6111	80%	1154	1408	1,239	991	**2.19%**
6116	100%	695	959	783	783	**1.73%**
6112	40%	980	1364	1,108	443	**0.98%**
6115	30%	1087	1512	1,229	369	**0.81%**
6217	100%	2576	2630	2,594	2,594	**5.72%**
6218	100%	2103	2491	2,232	2,232	**4.92%**
6215	100%	1780	1744	1,768	1,768	**3.90%**
6216	100%	316	424	352	352	**0.78%**
6251	100%	1881	2484	2,082	2,082	**4.59%**
6102	100%	1374	1759	1,502	1,502	**3.31%**
6101	90%	2169	2906	2,415	2,174	**4.80%**
6152	100%	822	1191	945	945	**2.08%**
6151	5%	1535	1955	1,675	84	**0.19%**
6201	50%	1382	1914	1,559	780	**1.72%**
6208	15%	2499	3258	2,752	413	**0.91%**
6209	10%	1641	1441	1,574	157	**0.35%**
6205	5%	2227	1913	2,122	106	**0.23%**
6204	65%	1827	1645	1,766	1,148	**2.53%**
6203	100%	861	1047	923	923	**2.04%**
6202	100%	1388	1446	1,407	1,407	**3.10%**
6214	100%	3560	3480	3,533	3,533	**7.79%**
5804	80%	2853	3047	2,918	2,334	**5.15%**
5151	30%	834	761	810	243	**0.54%**
5152	75%	1052	1821	1,308	981	**2.16%**
5821	5%	1953	2055	1,987	99	**0.22%**
5822	95%	1046	1412	1,168	1,110	**2.45%**
5812	100%	2217	2102	2,179	2,179	**4.81%**
5811	10%	4234	4170	4,213	421	**0.93%**
				64,928	45,324	100.00%

GLobal Storage - Albuquerque, NM

(Coors Blvd. / Sequoia Rd.)

Trip Distribution Map (%)

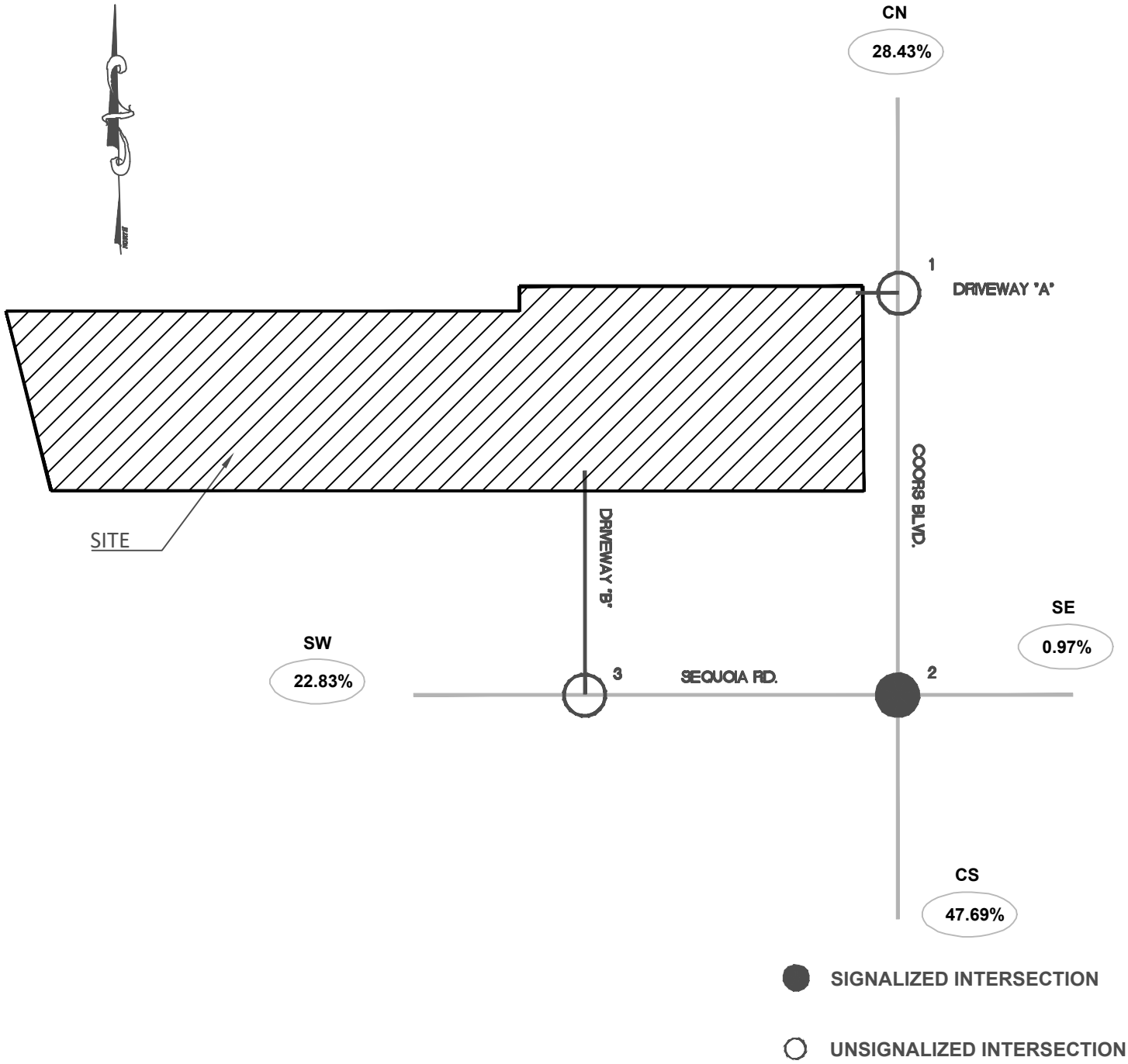

TIERRA WEST, LLC
5571 MIDWAY PARK PLACE NE
ALBUQUERQUE, NEW MEXICO 87109
(505)858-3100

Global Storage - Albuquerque, NM

(Coors Blvd. / Sequoia Rd.)

Trip Assignments (% Entering)

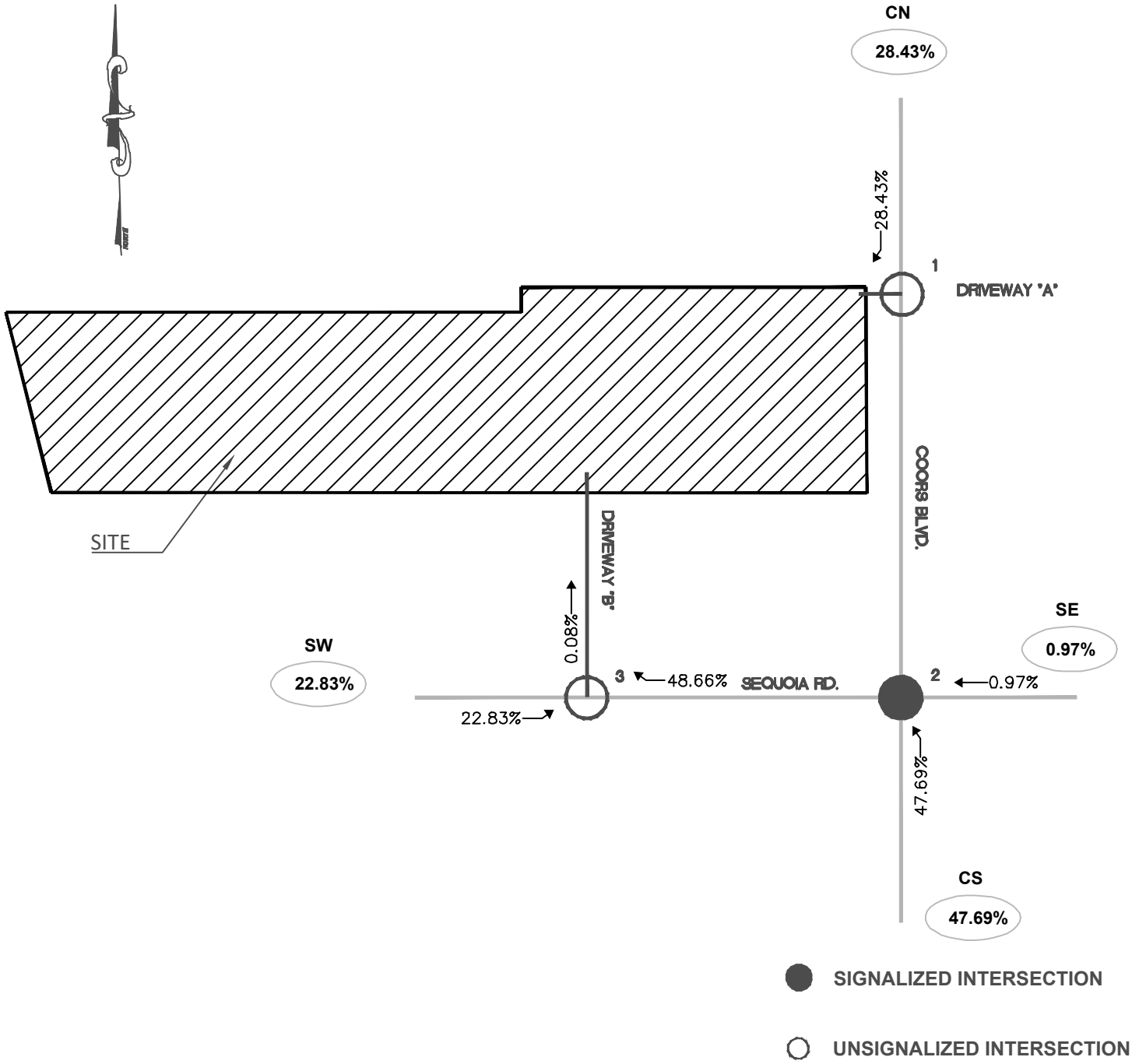

TIERRA WEST, LLC
5571 MIDWAY PARK PLACE NE
ALBUQUERQUE, NEW MEXICO 87109
(505)858-3100

Global Storage - Albuquerque, NM

(Coors Blvd. / Sequoia Rd.)

Trip Assignments (% Exiting)

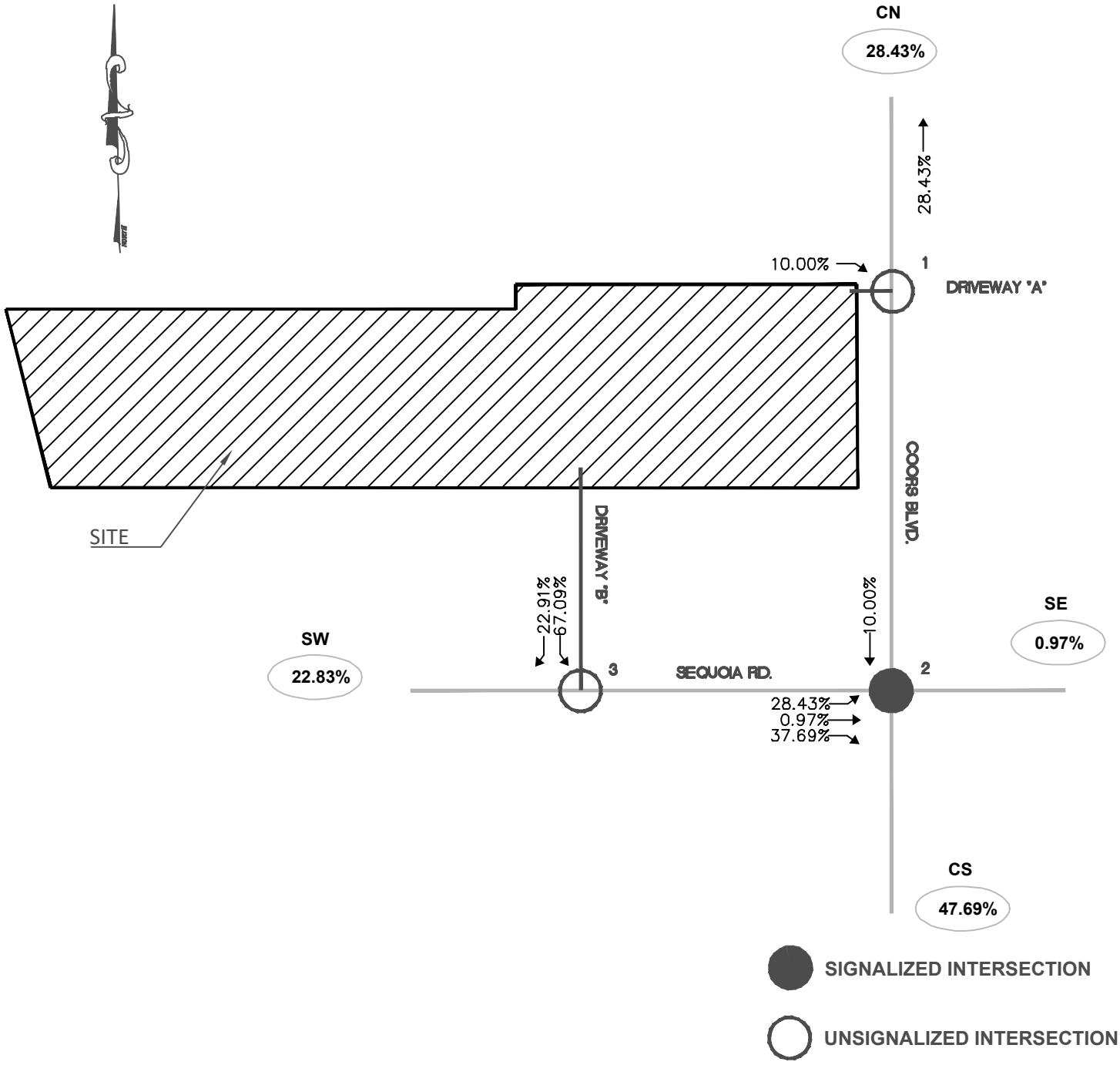

TIERRA WEST, LLC
5571 MIDWAY PARK PLACE NE
ALBUQUERQUE, NEW MEXICO 87109
(505)858-3100

Global Storage (Coors & Sequoia)

Projected Turning Movements SUMMARY

PROPOSED DEVELOPMENT (2024) - 100% Development

INTERSECTION: **Summary**

Driveway "A" / Coors Blvd

(1)

3.0% Truck

	1.00			1.00			1.00			1.00		PHF
	Eastbound (Driveway "A")			Westbound (Driveway "A")			Northbound (Coors Blvd)			Southbound (Coors Blvd)		
	Left	Thru	Right	Left	Thru	Right	Left	Thru	Right	Left	Thru	Right
Existing (2023)	0	0	8	0	0	0	0	1,820	0	0	2,716	8
2024 (NO BUILD - A.M.)	*0*	*0*	*8*	*0*	*0*	*0*	*0*	*2,190*	*0*	*0*	*3,007*	*8*
2024 (BUILD - A.M.)	***0***	***0***	***9***	***0***	***0***	***0***	***0***	***2,192***	***0***	***0***	***3,007***	***11***

	1.00			1.00			1.00			1.00		PHF
	Eastbound (Driveway "A")			Westbound (Driveway "A")			Northbound (Coors Blvd)			Southbound (Coors Blvd)		
	Left	Thru	Right	Left	Thru	Right	Left	Thru	Right	Left	Thru	Right
Existing (2023)	0	0	24	0	0	0	0	2,632	0	0	1,856	24
2024 (NO BUILD - P.M.)	*0*	*0*	*24*	*0*	*0*	*0*	*0*	*2,943*	*0*	*0*	*2,267*	*24*
2024 (BUILD - P.M.)	***0***	***0***	***27***	***0***	***0***	***0***	***0***	***2,950***	***0***	***0***	***2,267***	***33***

Sequoia Rd / Driveway "B"

(3)

3.0% Truck

	1.00			1.00			1.00			1.00		PHF
	Eastbound (Sequoia Rd)			Westbound (Sequoia Rd)			Northbound (Driveway "B")			Southbound (Driveway "B")		
	Left	Thru	Right	Left	Thru	Right	Left	Thru	Right	Left	Thru	Right
Existing (2023)	8	384	0	0	136	12	0	0	0	8	0	0
2024 (NO BUILD - A.M.)	*8*	*388*	*0*	*0*	*137*	*12*	*0*	*0*	*0*	*8*	*0*	*0*
2024 (BUILD - A.M.)	***10***	***388***	***0***	***0***	***137***	***17***	***0***	***0***	***0***	***12***	***0***	***1***

	1.00			1.00			1.00			1.00		PHF
	Eastbound (Sequoia Rd)			Westbound (Sequoia Rd)			Northbound (Driveway "B")			Southbound (Driveway "B")		
	Left	Thru	Right	Left	Thru	Right	Left	Thru	Right	Left	Thru	Right
Existing (2023)	20	396	0	0	308	8	0	0	0	0	0	16
2024 (NO BUILD - P.M.)	*20*	*400*	*0*	*0*	*311*	*8*	*0*	*0*	*0*	*0*	*0*	*16*
2024 (BUILD - P.M.)	***28***	***400***	***0***	***0***	***311***	***24***	***0***	***0***	***0***	***17***	***0***	***22***

Global Storage (Coors & Sequoia)

Projected Turning Movements Worksheet

Driveway "A" / Coors Blvd

INTERSECTION: E-W Street: **Driveway "A"** (1)

N-S Street: **Coors Blvd**

Year of Existing Counts 2023

Horizon Year **2024**

	Eastbound (Driveway "A")			Westbound (Driveway "A")			Northbound (Coors Blvd)			Southbound (Coors Blvd)		
Growth Rates	1.00%			1.00%			1.00%			1.00%		
	Left	Thru	Right	Left	Thru	Right	Left	Thru	Right	Left	Thru	Right
Existing Volumes	0	0	8	0	0	0	0	1,820	0	0	2,716	8
Background Traffic Growth	0	0	0	0	0	0	0	18	0	0	27	0
Subtotal	0	0	8	0	0	0	0	1,838	0	0	2,743	8
Coors Pavilion Trips	0	0	0	0	0	0	0	0	0	0	0	0
South Coors Pavilion (Oxbow) Trips	0	0	0	0	0	0	0	0	0	0	0	0
Subtotal (NO BUILD - A.M.)	***0***	***0***	***8***	***0***	***0***	***0***	***0***	***2,190***	***0***	***0***	***3,007***	***8***
Percent Commercial Trips Generated(Entering)	*0.00%*	*0.00%*	*0.00%*	*0.00%*	*0.00%*	*0.00%*	*0.00%*	*0.00%*	*0.00%*	*0.00%*	*0.00%*	***28.43%***
Percent Commercial Trips Generated(Exiting)	*0.00%*	*0.00%*	***10.00%***	*0.00%*	*0.00%*	*0.00%*	*0.00%*	***28.43%***	*0.00%*	*0.00%*	*0.00%*	*0.00%*
Total Trips Generated	0	0	1	0	0	0	0	2	0	0	0	3
Subtotal AM Pk Hr. BUILD Volumes	**0**	**0**	**9**	**0**	**0**	**0**	**0**	**2,192**	**0**	**0**	**3,007**	**11**
Total AM Peak Hour BUILD Volumes	**0**	**0**	**9**	**0**	**0**	**0**	**0**	**2,192**	**0**	**0**	**3,007**	**11**

	Eastbound (Driveway "A")			Westbound (Driveway "A")			Northbound (Coors Blvd)			Southbound (Coors Blvd)		
	Left	Thru	Right	Left	Thru	Right	Left	Thru	Right	Left	Thru	Right
Existing Volumes	0	0	24	0	0	0	0	2,632	0	0	1,856	24
Background Traffic Growth	0	0	0	0	0	0	0	26	0	0	19	0
Subtotal	0	0	24	0	0	0	0	2,658	0	0	1,875	24
Coors Pavilion Trips	0	0	0	0	0	0	0	0	0	0	0	0
South Coors Pavilion (Oxbow) Trips	0	0	0	0	0	0	0	0	0	0	0	0
Subtotal (NO BUILD - P.M.)	***0***	***0***	***24***	***0***	***0***	***0***	***0***	***2,943***	***0***	***0***	***2,267***	***24***
Percent Residential Trips Generated(Entering)	*0.00%*	*0.00%*	*0.00%*	*0.00%*	*0.00%*	*0.00%*	*0.00%*	*0.00%*	*0.00%*	*0.00%*	*0.00%*	*0.00%*
Percent Residential Trips Generated(Exiting)	*0.00%*	*0.00%*	*0.00%*	*0.00%*	*0.00%*	*0.00%*	*0.00%*	*0.00%*	*0.00%*	*0.00%*	*0.00%*	*0.00%*
Percent Commercial Trips Generated(Entering)	*0.00%*	*0.00%*	*0.00%*	*0.00%*	*0.00%*	*0.00%*	*0.00%*	*0.00%*	*0.00%*	*0.00%*	*0.00%*	***28.43%***
Percent Commercial Trips Generated(Exiting)	*0.00%*	*0.00%*	***10.00%***	*0.00%*	*0.00%*	*0.00%*	*0.00%*	***28.43%***	*0.00%*	*0.00%*	*0.00%*	*0.00%*
Total Trips Generated	0	0	3	0	0	0	0	7	0	0	0	9
Subtotal PM Pk Hr. BUILD Volumes	**0**	**0**	**27**	**0**	**0**	**0**	**0**	**2,950**	**0**	**0**	**2,267**	**33**
Total PM Peak Hour BUILD Volumes	**0**	**0**	**27**	**0**	**0**	**0**	**0**	**2,950**	**0**	**0**	**2,267**	**33**

NOTE: NO BUILD Volumes on Coors Blvd. include Coors Pavilion and Oxbow Trips

	Entering	Exiting		
Number of Commercial Trips Generated	**10**	**6**	A.M.	100% Commercial Development
	33	**26**	P.M.	

2024
NO BUILD

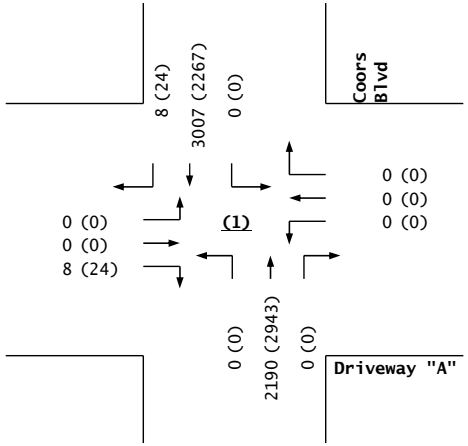

Trips

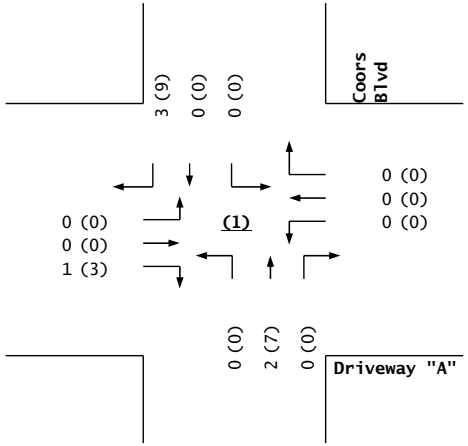

2024
BUILD

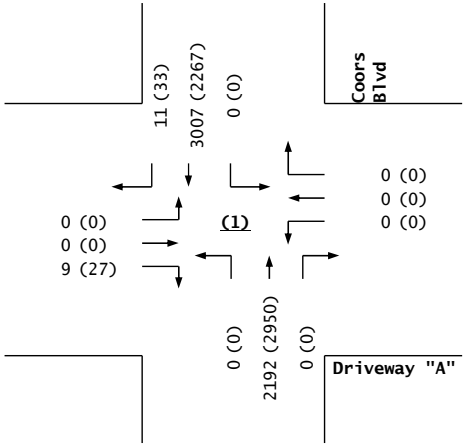

Driveway "A" / Coors Blvd

Global Storage (Coors & Sequoia)

Projected Turning Movements Worksheet

Sequoia Rd / Driveway "B"

INTERSECTION: E-W Street: **Sequoia Rd** (3)

N-S Street: **Driveway "B"**

Year of Existing Counts 2023

Horizon Year **2024**

	Eastbound (Sequoia Rd)			Westbound (Sequoia Rd)			Northbound (Driveway "B")			Southbound (Driveway "B")		
Growth Rates	1.00%			1.00%			1.00%			1.00%		
	Left	Thru	Right	Left	Thru	Right	Left	Thru	Right	Left	Thru	Right
Existing Volumes	8	384	0	0	136	12	0	0	0	8	0	0
Background Traffic Growth	0	4	0	0	1	0	0	0	0	0	0	0
Subtotal	8	388	0	0	137	12	0	0	0	8	0	0
Coors Pavilion Trips	0	0	0	0	0	0	0	0	0	0	0	0
South Coors Pavilion (Oxbow) Trips	0	0	0	0	0	0	0	0	0	0	0	0
Subtotal (NO BUILD - A.M.)	***8***	***388***	***0***	***0***	***137***	***12***	***0***	***0***	***0***	***8***	***0***	***0***
Percent Commercial Trips Generated(Entering)	***22.83%***	*0.00%*	*0.00%*	*0.00%*	*0.00%*	***48.66%***	*0.00%*	***0.08%***	*0.00%*	*0.00%*	*0.00%*	*0.00%*
Percent Commercial Trips Generated(Exiting)	*0.00%*	*0.00%*	*0.00%*	*0.00%*	*0.00%*	*0.00%*	*0.00%*	*0.00%*	*0.00%*	***67.09%***	*0.00%*	***22.91%***
Total Trips Generated	2	0	0	0	0	5	0	0	0	4	0	1
Total AM Peak Hour BUILD Volumes	**10**	**388**	**0**	**0**	**137**	**17**	**0**	**0**	**0**	**12**	**0**	**1**

	Eastbound (Sequoia Rd)			Westbound (Sequoia Rd)			Northbound (Driveway "B")			Southbound (Driveway "B")		
	Left	Thru	Right	Left	Thru	Right	Left	Thru	Right	Left	Thru	Right
Existing Volumes	20	396	0	0	308	8	0	0	0	0	0	16
Background Traffic Growth	0	4	0	0	3	0	0	0	0	0	0	0
Subtotal	20	400	0	0	311	8	0	0	0	0	0	16
Coors Pavilion Trips	0	0	0	0	0	0	0	0	0	0	0	0
South Coors Pavilion (Oxbow) Trips	0	0	0	0	0	0	0	0	0	0	0	0
Subtotal (NO BUILD - P.M.)	***20***	***400***	***0***	***0***	***311***	***8***	***0***	***0***	***0***	***0***	***0***	***16***
Percent Commercial Trips Generated(Entering)	***22.83%***	*0.00%*	*0.00%*	*0.00%*	*0.00%*	***48.66%***	*0.00%*	***0.08%***	*0.00%*	*0.00%*	*0.00%*	*0.00%*
Percent Commercial Trips Generated(Exiting)	*0.00%*	*0.00%*	*0.00%*	*0.00%*	*0.00%*	*0.00%*	*0.00%*	*0.00%*	*0.00%*	***67.09%***	*0.00%*	***22.91%***
Total Trips Generated	8	0	0	0	0	16	0	0	0	17	0	6
Total PM Peak Hour BUILD Volumes	**28**	**400**	**0**	**0**	**311**	**24**	**0**	**0**	**0**	**17**	**0**	**22**

NOTE: NO BUILD Volumes on Coors Blvd. include Coors Pavilion and Oxbow Trips

	Entering	Exiting		
Number of Commercial Trips Generated	**10**	**6**	A.M.	100% Commercial Development
	33	**26**	P.M.	

2024
NO BUILD

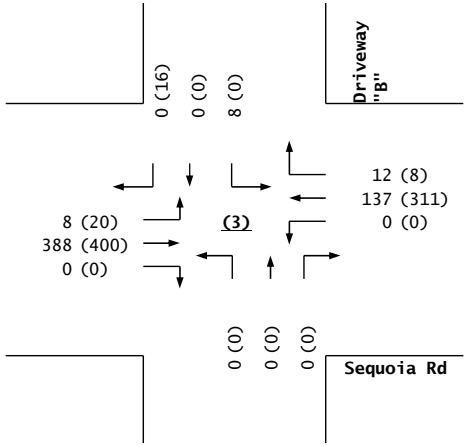

Trips

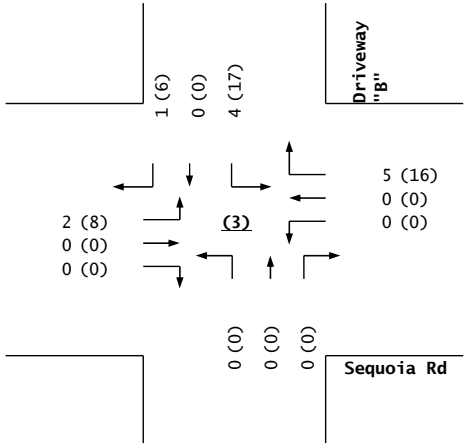

2024
BUILD

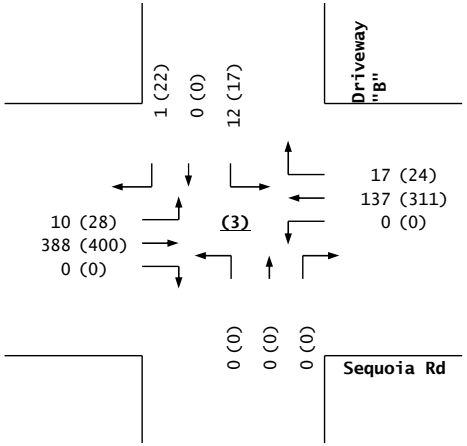

Sequoia Rd / Driveway "B"

Traffic Count Data Sheet (Raw Count)

Global Storage (Coors Blvd. / Sequoia Rd)

Year Counts Taken: **2023**

E-W Street **Sequoia Rd.**
N-S Street: **Coors Blvd.**

Speed Limit (Sequoia Rd.)= **30** MPH
Speed Limit (Coors Blvd.)= **45** MPH
Date of Count: **5/2/23**

Begin Time	End Time	Eastbound (Sequoia Rd.)			Westbound (Sequoia Rd.)			Northbound (Coors Blvd.)			Southbound (Coors Blvd.)		
		L	T	R	L	T	R	L	T	R	L	T	R
7:00 AM	7:15 AM	~~16~~	~~4~~	~~43~~	~~7~~	~~1~~	~~1~~	~~8~~	~~280~~	~~0~~	~~4~~	~~513~~	~~6~~
7:15 AM	7:30 AM	**11**	**4**	**42**	**10**	**5**	**5**	**21**	**335**	**10**	**4**	**601**	**9**
7:30 AM	7:45 AM	**15**	**7**	**58**	**17**	**9**	**5**	**15**	**436**	**7**	**5**	**665**	**3**
7:45 AM	8:00 AM	**22**	**10**	**68**	**10**	**6**	**3**	**25**	**418**	**13**	**9**	**641**	**12**
8:00 AM	8:15 AM	**23**	**3**	**43**	**10**	**3**	**3**	**24**	**387**	**8**	**10**	**538**	**12**
8:15 AM	8:30 AM	~~12~~	~~4~~	~~28~~	~~9~~	~~4~~	~~3~~	~~18~~	~~365~~	~~6~~	~~4~~	~~499~~	~~10~~
8:30 AM	8:45 AM	~~23~~	~~4~~	~~42~~	~~8~~	~~3~~	~~4~~	~~24~~	~~412~~	~~2~~	~~4~~	~~475~~	~~14~~
8:45 AM	9:00 AM	~~21~~	~~10~~	~~36~~	~~20~~	~~5~~	~~3~~	~~22~~	~~384~~	~~9~~	~~6~~	~~448~~	~~7~~
AM Peak Hour Volumes		**71**	**24**	**211**	**47**	**23**	**16**	**85**	**1576**	**38**	**28**	**2445**	**36**
% of Total Traffic		23.2%	7.8%	69.0%	54.7%	26.7%	18.6%	5.0%	92.8%	2.2%	1.1%	97.4%	1.4%
% Directional			6.7%			1.9%			36.9%			54.5%	

Begin Time	End Time	Eastbound (Sequoia Rd.)			Westbound (Sequoia Rd.)			Northbound (Coors Blvd.)			Southbound (Coors Blvd.)		
		L	T	R	L	T	R	L	T	R	L	T	R
4:00 PM	4:15 PM	~~24~~	~~9~~	~~38~~	~~35~~	~~29~~	~~10~~	~~41~~	~~488~~	~~18~~	~~15~~	~~479~~	~~12~~
4:15 PM	4:30 PM	~~19~~	~~20~~	~~38~~	~~37~~	~~19~~	~~9~~	~~41~~	~~568~~	~~22~~	~~12~~	~~440~~	~~17~~
4:30 PM	4:45 PM	**32**	**17**	**47**	**30**	**27**	**8**	**37**	**517**	**31**	**15**	**455**	**16**
4:45 PM	5:00 PM	**27**	**36**	**37**	**41**	**24**	**15**	**29**	**551**	**31**	**18**	**418**	**13**
5:00 PM	5:15 PM	**20**	**35**	**57**	**32**	**42**	**9**	**27**	**574**	**36**	**11**	**441**	**18**
5:15 PM	5:30 PM	**40**	**37**	**36**	**32**	**27**	**14**	**45**	**593**	**35**	**17**	**447**	**7**
5:30 PM	5:45 PM	~~18~~	~~19~~	~~38~~	~~34~~	~~21~~	~~15~~	~~34~~	~~511~~	~~32~~	~~11~~	~~429~~	~~13~~
5:45 PM	6:00 PM	~~24~~	~~14~~	~~34~~	~~34~~	~~24~~	~~7~~	~~35~~	~~497~~	~~29~~	~~14~~	~~402~~	~~14~~
PM Peak Hour Volumes		**119**	**125**	**177**	**135**	**120**	**46**	**138**	**2235**	**133**	**61**	**1761**	**54**
% of Total Traffic		28.3%	29.7%	42.0%	5.5%	89.2%	5.3%	44.9%	39.9%	15.3%	3.3%	93.9%	2.9%
% Directional			8.2%			49.1%			5.9%			36.8%	

Turning Movement Demand Worksheet: AM PEAK HOUR

Laneage:		1	1	1	1	1	1	1	3	1	1	3	1	
Lane Length (Ft.):		93	195	195	140	243	243	125	300	190	110	395	295	
Lane Capacity (veh.)		4	8	8	6	10	10	5	12	8	4	16	12	
% Turns		23.2%	7.8%	69.0%	54.7%	26.7%	18.6%	5.0%	92.8%	2.2%	1.1%	97.4%	1.4%	Video Time
Begin Time	End Time	Eastbound (Sequoia Rd.)			Westbound (Sequoia Rd.)			Northbound (Coors Blvd.)			Southbound (Coors Blvd.)			
		L	T	R	L	T	R	L	T	R	L	T	R	
7:00 AM	7:15 AM	16	4	43	7	1	1	8	280	0	4	513	6	
End of Period Queue			7			2			0			2		N/A
Distributed Queue		2	1	5	1	1	0	0	0	0	0	2	0	
15-Minute Demand		**18**	**5**	**48**	**8**	**2**	**1**	**8**	**280**	**0**	**4**	**515**	**6**	
7:15 AM	7:30 AM	11	4	42	10	5	5	21	335	10	4	601	9	
End of Period Queue			4			0			0			0		N/A
Distributed Queue		1	0	3	0	0	0	0	0	0	0	0	0	
Prev. Queue Credit		-2	-1	-5	-1	-1	0	0	0	0	0	-2	0	
15-Minute Demand		**10**	**3**	**40**	**9**	**4**	**5**	**21**	**335**	**10**	**4**	**599**	**9**	
7:30 AM	7:45 AM	15	7	58	17	9	5	15	436	7	5	665	3	
End of Period Queue			3			1			0			0		N/A
Distributed Queue		1	0	2	1	0	0	0	0	0	0	0	0	
Prev. Queue Credit		-1	0	-3	0	0	0	0	0	0	0	0	0	
15-Minute Demand		**15**	**7**	**57**	**18**	**9**	**5**	**15**	**436**	**7**	**5**	**665**	**3**	
7:45 AM	8:00 AM	22	10	68	10	6	3	25	418	13	9	641	12	
End of Period Queue			1			0			1			0		N/A
Distributed Queue		0	0	1	0	0	0	0	1	0	0	0	0	
Prev. Queue Credit		-1	0	-2	-1	0	0	0	0	0	0	0	0	
15-Minute Demand		**21**	**10**	**67**	**9**	**6**	**3**	**25**	**419**	**13**	**9**	**641**	**12**	
8:00 AM	8:15 AM	23	3	43	10	3	3	24	387	8	10	538	12	
End of Period Queue			3			1			1			0		N/A
Distributed Queue		1	0	2	1	0	0	0	1	0	0	0	0	
Prev. Queue Credit		0	0	-1	0	0	0	0	-1	0	0	0	0	
15-Minute Demand		**24**	**3**	**44**	**11**	**3**	**3**	**24**	**387**	**8**	**10**	**538**	**12**	
8:15 AM	8:30 AM	12	4	28	9	4	3	18	365	6	4	499	10	
End of Period Queue			5			3			0			0		N/A
Distributed Queue		1	0	3	2	1	1	0	0	0	0	0	0	
Prev. Queue Credit		-1	0	-2	-1	0	0	0	-1	0	0	0	0	
15-Minute Demand		**12**	**4**	**29**	**10**	**5**	**4**	**18**	**364**	**6**	**4**	**499**	**10**	
8:30 AM	8:45 AM	23	4	42	8	3	4	24	412	2	4	475	14	
End of Period Queue			1			1			1			0		N/A
Distributed Queue		0	0	1	1	0	0	0	1	0	0	0	0	
Prev. Queue Credit		-1	0	-3	-2	-1	-1	0	0	0	0	0	0	
15-Minute Demand		**22**	**4**	**40**	**7**	**2**	**3**	**24**	**413**	**2**	**4**	**475**	**14**	
8:45 AM	9:00 AM	21	10	36	20	5	3	22	384	9	6	448	7	
End of Period Queue			3			1			3			0		N/A
Distributed Queue		1	0	2	1	0	0	0	3	0	0	0	0	
Prev. Queue Credit		0	0	-1	-1	0	0	0	-1	0	0	0	0	
15-Minute Demand		**22**	**10**	**37**	**20**	**5**	**3**	**22**	**386**	**9**	**6**	**448**	**7**	

Turning Movement Demand Worksheet: PM PEAK HOUR

Laneage:		1	1	1	1	1	1	1	3	1	1	3	1	
Lane Length (Ft.):		93	195	195	140	243	243	125	300	190	110	395	295	
Lane Capacity (veh.)		4	8	8	6	10	10	5	12	8	4	16	12	
% Turns		28.3%	29.7%	42.0%	5.5%	89.2%	5.3%	44.9%	39.9%	15.3%	3.3%	93.9%	2.9%	Video Time
Begin Time	End Time	Eastbound (Sequoia Rd.)			Westbound (Sequoia Rd.)			Northbound (Coors Blvd.)			Southbound (Coors Blvd.)			
		L	T	R	L	T	R	L	T	R	L	T	R	
4:00 PM	4:15 PM	24	9	38	35	29	10	41	488	18	15	479	12	
End of Period Queue			1			6			0			0		N/A
Distributed Queue		0	0	0	3	2	1	0	0	0	0	0	0	
15-Minute Demand		**24**	**9**	**38**	**38**	**31**	**11**	**41**	**488**	**18**	**15**	**479**	**12**	
4:15 PM	4:30 PM	19	20	38	37	19	9	41	568	22	12	440	17	
End of Period Queue			5			4			2			0		N/A
Distributed Queue		1	1	2	2	2	1	0	0	0	0	0	0	
Prev. Queue Credit		0	0	0	-3	-2	-1	0	0	0	0	0	0	
15-Minute Demand		**20**	**21**	**40**	**36**	**19**	**9**	**41**	**568**	**22**	**12**	**440**	**17**	
4:30 PM	4:45 PM	32	17	47	30	27	8	37	517	31	15	455	16	
End of Period Queue			10			11			2			0		N/A
Distributed Queue		3	3	4	5	4	2	0	0	0	0	0	0	
Prev. Queue Credit		-1	-1	-2	-2	-2	-1	0	0	0	0	0	0	
15-Minute Demand		**34**	**19**	**49**	**33**	**29**	**9**	**37**	**517**	**31**	**15**	**455**	**16**	
4:45 PM	5:00 PM	27	36	37	41	24	15	29	551	31	18	418	13	
End of Period Queue			4			8			0			1		N/A
Distributed Queue		1	1	2	4	3	1	0	0	0	0	1	0	
Prev. Queue Credit		-3	-3	-4	-5	-4	-2	0	0	0	0	0	0	
15-Minute Demand		**25**	**34**	**35**	**40**	**23**	**14**	**29**	**551**	**31**	**18**	**419**	**13**	
5:00 PM	5:15 PM	20	35	57	32	42	9	27	574	36	11	441	18	
End of Period Queue			8			10			1			3		N/A
Distributed Queue		2	2	3	4	4	2	0	0	0	0	3	0	
Prev. Queue Credit		-1	-1	-2	-4	-3	-1	0	0	0	0	-1	0	
15-Minute Demand		**21**	**36**	**58**	**32**	**43**	**10**	**27**	**574**	**36**	**11**	**443**	**18**	
5:15 PM	5:30 PM	40	37	36	32	27	14	45	593	35	17	447	7	
End of Period Queue			7			0			0			0		N/A
Distributed Queue		2	2	3	0	0	0	0	0	0	0	0	0	
Prev. Queue Credit		-2	-2	-3	-4	-4	-2	0	0	0	0	-3	0	
15-Minute Demand		**40**	**37**	**36**	**28**	**23**	**12**	**45**	**593**	**35**	**17**	**444**	**7**	
5:30 PM	5:45 PM	18	19	38	34	21	15	34	511	32	11	429	13	
End of Period Queue			3			8			4			2		N/A
Distributed Queue		1	1	1	4	3	1	0	0	0	0	2	0	
Prev. Queue Credit		-2	-2	-3	0	0	0	0	0	0	0	0	0	
15-Minute Demand		**17**	**18**	**36**	**38**	**24**	**16**	**34**	**511**	**32**	**11**	**431**	**13**	
5:45 PM	6:00 PM	24	14	34	34	24	7	35	497	29	14	402	14	
End of Period Queue			7			3			5			0		N/A
Distributed Queue		2	2	3	1	1	0	0	0	0	0	0	0	
Prev. Queue Credit		-1	-1	-1	-4	-3	-1	0	0	0	0	-2	0	
15-Minute Demand		**25**	**15**	**36**	**31**	**22**	**6**	**35**	**497**	**29**	**14**	**400**	**14**	

Traffic Count Data Sheet (Demand Adjusted)

Year Counts Taken: **2023**

E-W Street: **Sequoia Rd.**
N-S Street: **Coors Blvd.**

Signalized

Speed Limit (Sequoia Rd.)= **30** MPH
Speed Limit (Coors Blvd.)= **45** MPH
5/2/23

Begin Time	End Time	Eastbound (Sequoia Rd.)				Westbound (Sequoia Rd.)				Northbound (Coors Blvd.)				Southbound (Coors Blvd.)			
		L	T	R	Peds	L	T	R	Peds	L	T	R	Peds	L	T	R	Peds
7:00 AM	7:15 AM	~~18~~	~~5~~	~~48~~	~~0~~	~~8~~	~~2~~	~~1~~	~~0~~	~~8~~	~~280~~	~~0~~	~~0~~	~~4~~	~~515~~	~~6~~	~~0~~
7:15 AM	7:30 AM	**10**	**3**	**40**	**0**	**9**	**4**	**5**	**0**	**21**	**335**	**10**	**0**	**4**	**599**	**9**	**0**
7:30 AM	7:45 AM	**15**	**7**	**57**	**0**	**18**	**9**	**5**	**0**	**15**	**436**	**7**	**0**	**5**	**665**	**3**	**0**
7:45 AM	8:00 AM	**21**	**10**	**67**	**0**	**9**	**6**	**3**	**0**	**25**	**419**	**13**	**0**	**9**	**641**	**12**	**0**
8:00 AM	8:15 AM	**24**	**3**	**44**	**0**	**11**	**3**	**3**	**0**	**24**	**387**	**8**	**0**	**10**	**538**	**12**	**0**
8:15 AM	8:30 AM	~~12~~	~~4~~	~~29~~	~~0~~	~~10~~	~~5~~	~~4~~	~~0~~	~~18~~	~~364~~	~~6~~	~~0~~	~~4~~	~~499~~	~~10~~	~~1~~
8:30 AM	8:45 AM	~~22~~	~~4~~	~~40~~	~~0~~	~~7~~	~~2~~	~~3~~	~~0~~	~~24~~	~~413~~	~~2~~	~~0~~	~~4~~	~~475~~	~~14~~	~~0~~
8:45 AM	9:00 AM	~~22~~	~~10~~	~~37~~	~~0~~	~~20~~	~~5~~	~~3~~	~~0~~	~~22~~	~~386~~	~~9~~	~~0~~	~~6~~	~~448~~	~~7~~	~~0~~
AM Peak Hour Volumes		**70**	**23**	**208**	~~0~~	**47**	**22**	**16**	~~0~~	**85**	**1577**	**38**	~~0~~	**28**	**2443**	**36**	~~0~~
Percent Approach		23.3%	7.6%	69.1%		55.3%	25.9%	18.8%		5.0%	92.8%	2.2%		1.1%	97.4%	1.4%	

Begin Time	End Time	Eastbound (Sequoia Rd.)				Westbound (Sequoia Rd.)				Northbound (Coors Blvd.)				Southbound (Coors Blvd.)			
		L	T	R	Peds	L	T	R	Peds	L	T	R	Peds	L	T	R	Peds
4:00 PM	4:15 PM	~~24~~	~~9~~	~~38~~	~~0~~	~~38~~	~~31~~	~~11~~	~~0~~	~~41~~	~~488~~	~~18~~	~~0~~	~~15~~	~~479~~	~~12~~	~~0~~
4:15 PM	4:30 PM	~~20~~	~~21~~	~~40~~	~~0~~	~~36~~	~~19~~	~~9~~	~~0~~	~~41~~	~~568~~	~~22~~	~~0~~	~~12~~	~~440~~	~~17~~	~~0~~
4:30 PM	4:45 PM	**34**	**19**	**49**	**0**	**33**	**29**	**9**	**0**	**37**	**517**	**31**	**0**	**15**	**455**	**16**	**0**
4:45 PM	5:00 PM	**25**	**34**	**35**	**0**	**40**	**23**	**14**	**0**	**29**	**551**	**31**	**0**	**18**	**419**	**13**	**0**
5:00 PM	5:15 PM	**21**	**36**	**58**	**0**	**32**	**43**	**10**	**0**	**27**	**574**	**36**	**0**	**11**	**443**	**18**	**0**
5:15 PM	5:30 PM	**40**	**37**	**36**	**0**	**28**	**23**	**12**	**0**	**45**	**593**	**35**	**0**	**17**	**444**	**7**	**0**
5:30 PM	5:45 PM	~~17~~	~~18~~	~~36~~	~~0~~	~~38~~	~~24~~	~~16~~	~~0~~	~~34~~	~~511~~	~~32~~	~~0~~	~~11~~	~~431~~	~~13~~	~~0~~
5:45 PM	6:00 PM	~~25~~	~~15~~	~~36~~	~~0~~	~~31~~	~~22~~	~~6~~	~~0~~	~~35~~	~~497~~	~~29~~	~~0~~	~~14~~	~~400~~	~~14~~	~~0~~
PM Peak Hour Volumes		**120**	**126**	**178**	~~0~~	**133**	**118**	**45**	~~0~~	**138**	**2235**	**133**	~~0~~	**61**	**1761**	**54**	~~0~~
Percent Approach		28.3%	29.7%	42.0%		44.9%	39.9%	15.2%		5.5%	89.2%	5.3%		3.3%	93.9%	2.9%	

AM Peak Hour Raw Count	71	24	211	47	23	16	85	1576	38	28	2445	36
% Change	-1%	-4%	-1%	0%	-4%	0%	0%	0%	0%	0%	0%	0%
PM Peak Hour Raw Count	119	125	177	135	120	46	138	2235	133	61	1761	54
% Change	1%	1%	1%	-1%	-2%	-2%	0%	0%	0%	0%	0%	0%

INPUT DATA IN YELLOW HIGHLIGTED CELLS ONLY

Global Storage (Coors Blvd. / Sequoia Rd)

Projected Turning Movements Worksheet

Sequoia Rd. / Coors Blvd.

MULTIPLE PERIOD ANALYSIS WORKSHEET

INTERSECTION: E-W Street: **Sequoia Rd.** (2)
N-S Street: **Coors Blvd.**

Year of Existing Counts 2023
Implementation Year **2024**

NOTES

1. INPUT Trip Generation Rates

	Entering	Exiting		
Retail/Shopping Center (Hourly)	**10**	**6**	A.M.	100% Retail Development
	33	**26**	P.M.	

2. Calculate Pass-by Trips
3. INPUT Previous Development Volumes and % of Trips Generated

AM Peak		Eastbound (Sequoia Rd.)			Westbound (Sequoia Rd.)			Northbound (Coors Blvd.)			Southbound (Coors Blvd.)		
Growth Rates		1.00%			1.00%			1.00%			1.00%		
(Hourly Demand Volumes - AM Peak)		Left	Thru	Right	Left	Thru	Right	Left	Thru	Right	Left	Thru	Right
Existing Volumes (Demand) - Period 1-	7:00 AM	18	5	48	8	2	1	8	280	0	4	515	6
Existing Volumes (Demand) - Period 2-	7:15 AM	10	3	40	9	4	5	21	335	10	4	599	9
Existing Volumes (Demand) - Period 3-	7:30 AM	15	7	57	18	9	5	15	436	7	5	665	3
Existing Volumes (Demand) - Period 4-	7:45 AM	21	10	67	9	6	3	25	419	13	9	641	12
Existing Volumes (Demand) - Period 5-	8:00 AM	24	3	44	11	3	3	24	387	8	10	538	12
Existing Volumes (Demand) - Period 6-	8:15 AM	12	4	29	10	5	4	18	364	6	4	499	10
Existing Volumes (Demand) - Period 7-	8:30 AM	22	4	40	7	2	3	24	413	2	4	475	14
Existing Volumes (Demand) - Period 8-	8:45 AM	22	10	37	20	5	3	22	386	9	6	448	7
Maximum Existing AM Volumes		**15**	**7**	**57**	**18**	**9**	**5**	**15**	**436**	**7**	**5**	**665**	**3**
Background Traffic Growth		0	0	1	0	0	0	0	4	0	0	7	0
Coors Pavilion Development		0	0	0	0	0	2	0	37	0	2	31	0
South Coors Pavilion (Oxbow) Development		0	0	0	0	0	2	0	46	0	2	37	0
AM Peak NO BUILD Volumes - Preiod 1		**18**	**5**	**49**	**8**	**2**	**5**	**8**	**367**	**0**	**8**	**590**	**6**
AM Peak NO BUILD Volumes - Period 2		**10**	**3**	**41**	**9**	**4**	**9**	**21**	**422**	**10**	**8**	**674**	**9**
AM Peak NO BUILD Volumes - Preiod 3		**15**	**7**	**58**	**18**	**9**	**9**	**15**	**523**	**7**	**9**	**740**	**3**
AM Peak NO BUILD Volumes - Period 4		**21**	**10**	**68**	**9**	**6**	**7**	**25**	**506**	**13**	**13**	**716**	**12**
AM Peak NO BUILD Volumes - Preiod 5		**24**	**3**	**45**	**11**	**3**	**7**	**24**	**474**	**8**	**14**	**613**	**12**
AM Peak NO BUILD Volumes - Period 6		**12**	**4**	**30**	**10**	**5**	**8**	**18**	**451**	**6**	**8**	**574**	**10**
AM Peak NO BUILD Volumes - Preiod 7		**22**	**4**	**41**	**7**	**2**	**7**	**24**	**500**	**2**	**8**	**550**	**14**
AM Peak NO BUILD Volumes - Period 8		**22**	**10**	**38**	**20**	**5**	**7**	**22**	**473**	**9**	**10**	**523**	**7**
Maximum AM NO BUILD Volumes		**15**	**7**	**58**	**18**	**9**	**9**	**15**	**523**	**7**	**9**	**740**	**3**
Percent Commercial Trips Generated(Entering)		*0.00%*	*0.00%*	*0.00%*	*0.00%*	***0.97%***	*0.00%*	***47.69%***	*0.00%*	*0.00%*	*0.00%*	*0.00%*	*0.00%*
Percent Commercial Trips Generated(Exiting)		***28.43%***	***0.97%***	***37.69%***	*0.00%*	*0.00%*	*0.00%*	*0.00%*	*0.00%*	*0.00%*	*0.00%*	***10.00%***	*0.00%*
Total Primary Trips Generated		1	1	1	0	1	0	2	0	0	0	1	0
Pass-by Trip Adjustments		*0*	*0*	*0*	*0*	*0*	*0*	*0*	*0*	*0*	*0*	*0*	*0*
AM Peak BUILD Volumes - Preiod 1		**19**	**6**	**50**	**8**	**3**	**5**	**10**	**367**	**0**	**8**	**591**	**6**
AM Peak BUILD Volumes - Period 2		**11**	**4**	**42**	**9**	**5**	**9**	**23**	**422**	**10**	**8**	**675**	**9**
AM Peak BUILD Volumes - Preiod 3		**16**	**8**	**59**	**18**	**10**	**9**	**17**	**523**	**7**	**9**	**741**	**3**
AM Peak BUILD Volumes - Preiod 4		**22**	**11**	**69**	**9**	**7**	**7**	**27**	**506**	**13**	**13**	**717**	**12**
AM Peak BUILD Volumes - Period 5		**25**	**4**	**46**	**11**	**4**	**7**	**26**	**474**	**8**	**14**	**614**	**12**
AM Peak BUILD Volumes - Preiod 6		**13**	**5**	**31**	**10**	**6**	**8**	**20**	**451**	**6**	**8**	**575**	**10**
AM Peak BUILD Volumes - Preiod 7		**23**	**5**	**42**	**7**	**3**	**7**	**26**	**500**	**2**	**8**	**551**	**14**
AM Peak BUILD Volumes - Period 8		**23**	**11**	**39**	**20**	**6**	**7**	**24**	**473**	**9**	**10**	**524**	**7**
Maximum AM BUILD Volumes (Demand)		**16**	**8**	**59**	**18**	**10**	**9**	**17**	**523**	**7**	**9**	**741**	**3**

PM Peak		Eastbound (Sequoia Rd.)			Westbound (Sequoia Rd.)			Northbound (Coors Blvd.)			Southbound (Coors Blvd.)		
		1.00%			1.00%			1.00%			1.00%		
(Hourly Demand Volumes - PM Peak)		Left	Thru	Right	Left	Thru	Right	Left	Thru	Right	Left	Thru	Right
Existing Volumes (Demand) - Period 1-	4:00 PM	24	9	38	38	31	11	41	488	18	15	479	12
Existing Volumes (Demand) - Period 2-	4:15 PM	20	21	40	36	19	9	41	568	22	12	440	17
Existing Volumes (Demand) - Period 3-	4:30 PM	34	19	49	33	29	9	37	517	31	15	455	16
Existing Volumes (Demand) - Period 4-	4:45 PM	25	34	35	40	23	14	29	551	31	18	419	13
Existing Volumes (Demand) - Period 5-	5:00 PM	21	36	58	32	43	10	27	574	36	11	443	18
Existing Volumes (Demand) - Period 6-	5:15 PM	40	37	36	28	23	12	45	593	35	17	444	7
Existing Volumes (Demand) - Period 7-	5:30 PM	17	18	36	38	24	16	34	511	32	11	431	13
Existing Volumes (Demand) - Period 8-	5:45 PM	25	15	36	31	22	6	35	497	29	14	400	14
Maximum Existing PM Volumes		**40**	**37**	**36**	**28**	**23**	**12**	**45**	**593**	**35**	**17**	**444**	**7**
Background Traffic Growth		0	0	0	0	0	0	0	6	0	0	4	0
Coors Pavilion Development		0	0	0	0	0	2	0	29	0	2	30	0
South Coors Pavilion (Oxbow) Development		0	0	0	0	0	3	0	48	0	3	56	0
PM Peak NO BUILD Volumes - Preiod 1		**24**	**9**	**38**	**38**	**31**	**16**	**41**	**571**	**18**	**20**	**569**	**12**
PM Peak NO BUILD Volumes - Period 2		**20**	**21**	**40**	**36**	**19**	**14**	**41**	**651**	**22**	**17**	**530**	**17**
PM Peak NO BUILD Volumes - Preiod 3		**34**	**19**	**49**	**33**	**29**	**14**	**37**	**600**	**31**	**20**	**545**	**16**
PM Peak NO BUILD Volumes - Period 4		**25**	**34**	**35**	**40**	**23**	**19**	**29**	**634**	**31**	**23**	**509**	**13**
PM Peak NO BUILD Volumes - Preiod 5		**21**	**36**	**58**	**32**	**43**	**15**	**27**	**657**	**36**	**16**	**533**	**18**

INPUT DATA IN YELLOW HIGHLIGTED CELLS ONLY

Global Storage (Coors Blvd. / Sequoia Rd)

Projected Turning Movements Worksheet

Sequoia Rd. / Coors Blvd.

MULTIPLE PERIOD ANALYSIS WORKSHEET

INTERSECTION: E-W Street: **Sequoia Rd.** (2)

N-S Street: **Coors Blvd.**

NOTES

Year of Existing Counts 2023

Implementation Year **2024**

1. INPUT Trip Generation Rates

	Entering	Exiting		
Retail/Shopping Center (Hourly)	**10**	**6**	A.M.	100% Retail Development
	33	**26**	P.M.	

2. Calculate Pass-by Trips

3. INPUT Previous Development Volumes and % of Trips Generated

Growth Rates		**1.00%**			**1.00%**			**1.00%**			**1.00%**	
PM Peak NO BUILD Volumes - Period 6	40	37	36	28	23	17	45	676	35	22	534	7
PM Peak NO BUILD Volumes - Preiod 7	17	18	36	38	24	21	34	594	32	16	521	13
PM Peak NO BUILD Volumes - Period 8	25	15	36	31	22	11	35	580	29	19	490	14
Maximum PM NO BUILD Volumes	40	37	36	28	23	17	45	676	35	22	534	7
Percent Commercial Trips Generated(Entering)	*0.00%*	*0.00%*	*0.00%*	*0.00%*	***0.97%***	*0.00%*	***47.69%***	*0.00%*	*0.00%*	*0.00%*	*0.00%*	*0.00%*
Percent Commercial Trips Generated(Exiting)	***28.43%***	***0.97%***	***37.69%***	*0.00%*	*0.00%*	*0.00%*	*0.00%*	*0.00%*	*0.00%*	*0.00%*	***10.00%***	*0.00%*
Total Primary Trips Generated	2	1	3	0	1	0	4	0	0	0	1	0
Pass-by Trip Adjustments	*0*	*0*	*0*	*0*	*0*	*0*	*0*	*0*	*0*	*0*	*0*	*0*
PM Peak BUILD Volumes - Preiod 1	26	10	41	38	32	16	45	571	18	20	570	12
PM Peak BUILD Volumes - Period 2	22	22	43	36	20	14	45	651	22	17	531	17
PM Peak BUILD Volumes - Preiod 3	36	20	52	33	30	14	41	600	31	20	546	16
PM Peak BUILD Volumes - Preiod 4	27	35	38	40	24	19	33	634	31	23	510	13
PM Peak BUILD Volumes - Period 5	23	37	61	32	44	15	31	657	36	16	534	18
PM Peak BUILD Volumes - Preiod 6	42	38	39	28	24	17	49	676	35	22	535	7
PM Peak BUILD Volumes - Preiod 7	19	19	39	38	25	21	38	594	32	16	522	13
PM Peak BUILD Volumes - Period 8	27	16	39	31	23	11	39	580	29	19	491	14
Maximum PM BUILD Volumes	42	38	39	28	24	17	49	676	35	22	535	7

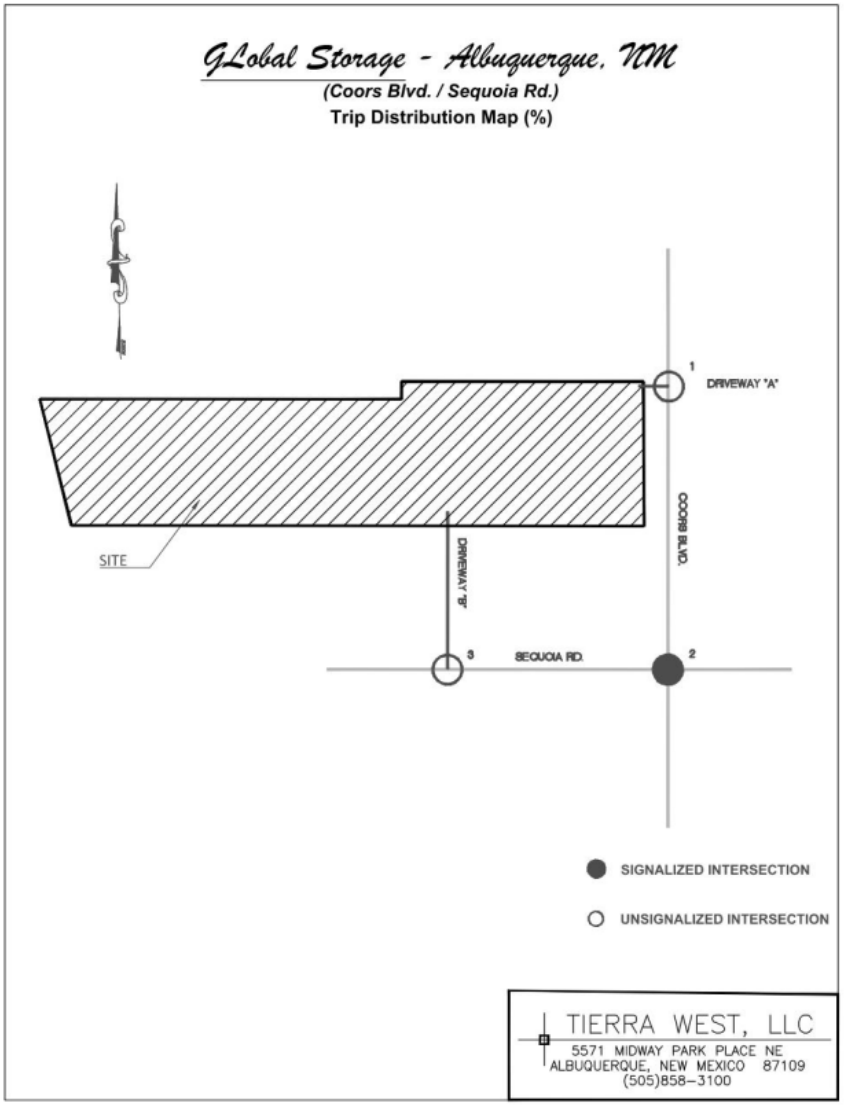

2024 NO BUILD | **2024 BUILD** | **2024 MITIGATED**

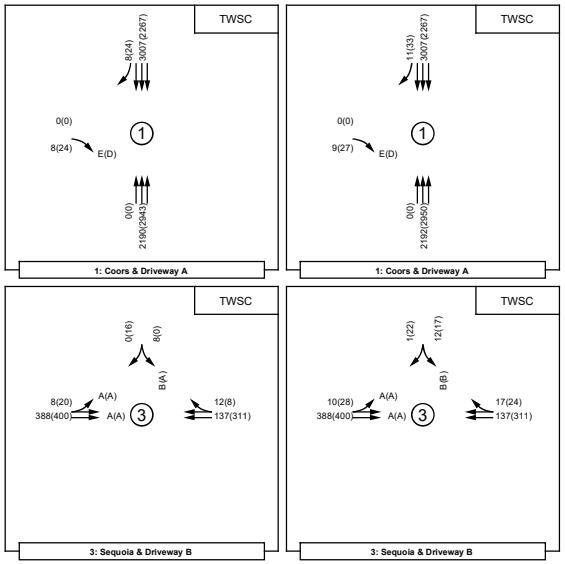

Global Storage Development
(NW Corner of Coors Blvd. / Sequoia Rd.)
LOS / Volume Analysis Map

AM(PM)

Synchro Results Summary Sheet

1: Coors & Driveway A

2024_Conditions

Driveway "A"

Coors Blvd.

Unsignalized

Coors Blvd. / Driveway "A" 2024_Conditions	EB (Driveway "A")			NB (Coors Blvd.)			SB (Coors Blvd.)		
	L	T	R	L	T	R	L	T	R
Existing Lane Geometry			1		3			3	1
AM Peak Hour									
NO BUILD Volumes			8		2,190			3,007	8
V/C Ratio			0.09						
Level-of-Service			E						
Control Delay (Seconds)			46.8						
Intersection LOS	**TWSC**								
95th Percentile Queue (veh)			0.3						
BUILD Volumes			9		2,192			3,007	11
V/C Ratio			0.10						
Level-of-Service			E						
Control Delay (Seconds)			47.3						
Intersection LOS	**TWSC**								
95th Percentile Queue (veh)			0.3						
PM Peak Hour									
NO BUILD Volumes			24		2,943			2,267	24
V/C Ratio			0.14						
Level-of-Service			D						
Control Delay (Seconds)			30.1						
Intersection LOS	**TWSC**								
95th Percentile Queue (veh)			0.5						
BUILD Volumes			27		2,950			2,267	33
V/C Ratio			0.16						
Level-of-Service			D						
Control Delay (Seconds)			30.7						
Intersection LOS	**TWSC**								
95th Percentile Queue (veh)			0.6						

Synchro Results Summary Sheet

2: Coors & Sequoia

2024_Conditions

Sequoia Rd.

Coors Blvd.

Signalized

Coors Blvd. / Sequoia Rd. 2024_Conditions	EB (Sequoia Rd.)			WB (Sequoia Rd.)			NB (Coors Blvd.)			SB (Coors Blvd.)		
	L	T	R	L	T	R	L	T	R	L	T	R
Existing Lane Geometry	1	1	1	1	1	1	1	3	1	1	3	1
AM Peak Hour												
NO BUILD Volumes	60	28	232	70	36	36	60	2,092	28	36	2,960	12
V/C Ratio	0.24	0.09	0.80	0.28	0.12	0.13	0.54	0.57	0.03	0.20	0.81	0.01
Level-of-Service	E	D	E	E	D	D	D	B	A	A	B	A
Control Delay (Seconds)	57.7	53.5	68.0	57.7	53.8	52.0	37.3	10.3	5.8	9.7	16.4	6.0
Intersection LOS	**B - 18.0**											
Queue Storage Ratio	1.1	0.0	0.0	0.8	0.0	0.2	0.6	0.0	0.1	0.1	0.0	0.0
Length of Queue (ft)	96.1			112.4		53.9	78.6		10.9	13.9		4.8
Existing Lane Capacity (ft)	90.0			145.0		245.0	125.0		200.0	115.0		280.0
Additional Queue Length Required (ft)	6.1			0.0		0.0	0.0		0.0	0.0		0.0
BUILD Volumes	64	32	236	72	40	36	68	2,092	28	36	2,964	12
V/C Ratio	0.26	0.10	0.80	0.28	0.13	0.13	0.59	0.57	0.03	0.21	0.82	0.01
Level-of-Service	E	D	E	E	D	D	D	B	A	A	B	A
Control Delay (Seconds)	57.9	53.3	67.3	57.7	53.6	51.7	39.8	10.5	5.9	9.9	17.0	6.2
Intersection LOS	**B - 18.5**											
Queue Storage Ratio	1.1	0.0	0.0	0.8	0.0	0.2	0.7	0.0	0.1	0.1	0.0	0.0
Length of Queue (ft)	102.8			115.9		53.7	89.3		11.1	14.2		4.9
Existing Lane Capacity (ft)	90.0			145.0		245.0	125.0		200.0	115.0		280.0
Additional Queue Length Required (ft)	12.8			0.0		0.0	0.0		0.0	0.0		0.0

PM Peak Hour

NO BUILD Volumes	160	148	144	112	92	68	180	2,704	140	88	2,136	28
V/C Ratio	0.79	0.49	0.44	0.70	0.30	0.23	0.84	0.75	0.13	0.65	0.61	0.03
Level-of-Service	F	E	D	F	E	D	D	B	A	D	B	A
Control Delay (Seconds)	84.8	58.3	52.8	81.1	55.8	51.7	38.0	14.8	7.0	35.3	12.8	7.1
Intersection LOS	**C - 21.0**											
Queue Storage Ratio	3.3	0.0	0.0	1.5	0.0	0.4	1.9	0.0	0.3	1.0	0.0	0.0
Length of Queue (ft)	297.4			217.7		102.3	235.8		62.8	112.2		12.5
Existing Lane Capacity (ft)	90.0			145.0		245.0	125.0		200.0	115.0		280.0
Additional Queue Length Required (ft)	207.4			72.7		0.0	110.8		0.0	0.0		0.0
BUILD Volumes	168	152	156	112	96	68	196	2,704	140	88	2,140	28
V/C Ratio	0.84	0.50	0.47	0.72	0.32	0.23	0.89	0.75	0.13	0.65	0.61	0.03
Level-of-Service	F	E	D	F	E	D	D	B	A	C	B	A
Control Delay (Seconds)	93.2	58.5	52.7	82.9	56.0	51.7	47.9	14.8	7.0	35.0	13.2	7.3
Intersection LOS	**C - 22.0**											
Queue Storage Ratio	3.6	0.0	0.0	1.5	0.0	0.4	2.1	0.0	0.3	1.0	0.0	0.1
Length of Queue (ft)	322.5			220.1		102.3	266.2		62.8	111.3		12.8
Existing Lane Capacity (ft)	90.0			145.0		245.0	125.0		200.0	115.0		280.0
Additional Queue Length Required (ft)	232.5			75.1		0.0	141.2		0.0	0.0		0.0

Synchro Results Summary Sheet

3: Sequoia & Driveway B

2024_Conditions

Driveway "B"

Coors Blvd.

Unsignalized

Coors Blvd. / Driveway "B" 2024_Conditions	EB (Driveway "B")			WB (Driveway "B")			SB (Coors Blvd.)		
	L	T	R	L	T	R	L	T	R
Existing Lane Geometry	0	<2			2>	0	1>		0
AM Peak Hour									
NO BUILD Volumes	8	388			137	12	8		0
V/C Ratio	0.01						0.01		
Level-of-Service	A	A					B		
Control Delay (Seconds)	7.5	0.0					11.0		
Intersection LOS	**TWSC**								
95th Percentile Queue (veh)	0.0						0.0		
BUILD Volumes	10	388			137	17	12		1
V/C Ratio	0.01						0.02		
Level-of-Service	A	A					B		
Control Delay (Seconds)	7.6	0.0					10.9		
Intersection LOS	**TWSC**								
95th Percentile Queue (veh)	0.0						0.1		

PM Peak Hour									
NO BUILD Volumes	8	388			137	12	8		0
V/C Ratio	0.01						0.01		
Level-of-Service	A	A					B		
Control Delay (Seconds)	7.5	0.0					11.0		
Intersection LOS	**TWSC**								
95th Percentile Queue (veh)	0.0						0.0		
BUILD Volumes	28	400			311	24	17		22
V/C Ratio	0.02						0.07		
Level-of-Service	A	A					B		
Control Delay (Seconds)	8.0	0.1					11.5		
Intersection LOS	**TWSC**								
95th Percentile Queue (veh)	0.1						0.2		

Intersection	
Int Delay, s/veh	0.1

Movement	EBL	EBR	NBL	NBT	SBT	SBR
Lane Configurations		↱		↑↑↑	↑↑↑	↱
Traffic Vol, veh/h	0	8	0	2190	3007	8
Future Vol, veh/h	0	8	0	2190	3007	8
Conflicting Peds, #/hr	0	0	0	0	0	0
Sign Control	Stop	Stop	Free	Free	Free	Free
RT Channelized	-	None	-	None	-	None
Storage Length	-	-	-	-	-	120
Veh in Median Storage, #	0	-	-	0	0	-
Grade, %	0	-	-	0	0	-
Peak Hour Factor	100	100	100	100	100	100
Heavy Vehicles, %	3	3	3	3	3	3
Mvmt Flow	0	8	0	2190	3007	8

Major/Minor	Minor2		Major1		Major2	
Conflicting Flow All	-	1504	-	0	-	0
Stage 1	-	-	-	-	-	-
Stage 2	-	-	-	-	-	-
Critical Hdwy	-	7.16	-	-	-	-
Critical Hdwy Stg 1	-	-	-	-	-	-
Critical Hdwy Stg 2	-	-	-	-	-	-
Follow-up Hdwy	-	3.93	-	-	-	-
Pot Cap-1 Maneuver	0	94	0	-	-	-
Stage 1	0	-	0	-	-	-
Stage 2	0	-	0	-	-	-
Platoon blocked, %				-	-	-
Mov Cap-1 Maneuver	-	94	-	-	-	-
Mov Cap-2 Maneuver	-	-	-	-	-	-
Stage 1	-	-	-	-	-	-
Stage 2	-	-	-	-	-	-

Approach	EB	NB	SB
HCM Control Delay, s	46.8	0	0
HCM LOS	E		

Minor Lane/Major Mvmt	NBT	EBLn1	SBT	SBR
Capacity (veh/h)	-	94	-	-
HCM Lane V/C Ratio	-	0.085	-	-
HCM Control Delay (s)	-	46.8	-	-
HCM Lane LOS	-	E	-	-
HCM 95th %tile Q(veh)	-	0.3	-	-

Intersection	
Int Delay, s/veh	0.1

Movement	EBL	EBR	NBL	NBT	SBT	SBR
Lane Configurations		↱		↑↑↑	↑↑↑	↱
Traffic Vol, veh/h	0	9	0	2192	3007	11
Future Vol, veh/h	0	9	0	2192	3007	11
Conflicting Peds, #/hr	0	0	0	0	0	0
Sign Control	Stop	Stop	Free	Free	Free	Free
RT Channelized	-	None	-	None	-	None
Storage Length	-	-	-	-	-	120
Veh in Median Storage, #	0	-	-	0	0	-
Grade, %	0	-	-	0	0	-
Peak Hour Factor	100	100	100	100	100	100
Heavy Vehicles, %	3	3	3	3	3	3
Mvmt Flow	0	9	0	2192	3007	11

Major/Minor	Minor2		Major1		Major2	
Conflicting Flow All	-	1504	-	0	-	0
Stage 1	-	-	-	-	-	-
Stage 2	-	-	-	-	-	-
Critical Hdwy	-	7.16	-	-	-	-
Critical Hdwy Stg 1	-	-	-	-	-	-
Critical Hdwy Stg 2	-	-	-	-	-	-
Follow-up Hdwy	-	3.93	-	-	-	-
Pot Cap-1 Maneuver	0	94	0	-	-	-
Stage 1	0	-	0	-	-	-
Stage 2	0	-	0	-	-	-
Platoon blocked, %				-	-	-
Mov Cap-1 Maneuver	-	94	-	-	-	-
Mov Cap-2 Maneuver	-	-	-	-	-	-
Stage 1	-	-	-	-	-	-
Stage 2	-	-	-	-	-	-

Approach	EB	NB	SB
HCM Control Delay, s	47.3	0	0
HCM LOS	E		

Minor Lane/Major Mvmt	NBT	EBLn1	SBT	SBR
Capacity (veh/h)	-	94	-	-
HCM Lane V/C Ratio	-	0.096	-	-
HCM Control Delay (s)	-	47.3	-	-
HCM Lane LOS	-	E	-	-
HCM 95th %tile Q(veh)	-	0.3	-	-

Intersection	
Int Delay, s/veh	0.1

Movement	EBL	EBR	NBL	NBT	SBT	SBR
Lane Configurations		↱		↑↑↑	↑↑↑	↱
Traffic Vol, veh/h	0	24	0	2943	2267	24
Future Vol, veh/h	0	24	0	2943	2267	24
Conflicting Peds, #/hr	0	0	0	0	0	0
Sign Control	Stop	Stop	Free	Free	Free	Free
RT Channelized	-	None	-	None	-	None
Storage Length	-	-	-	-	-	120
Veh in Median Storage, #	0	-	-	0	0	-
Grade, %	0	-	-	0	0	-
Peak Hour Factor	100	100	100	100	100	100
Heavy Vehicles, %	3	3	3	3	3	3
Mvmt Flow	0	24	0	2943	2267	24

Major/Minor	Minor2		Major1		Major2	
Conflicting Flow All	-	1134	-	0	-	0
Stage 1	-	-	-	-	-	-
Stage 2	-	-	-	-	-	-
Critical Hdwy	-	7.16	-	-	-	-
Critical Hdwy Stg 1	-	-	-	-	-	-
Critical Hdwy Stg 2	-	-	-	-	-	-
Follow-up Hdwy	-	3.93	-	-	-	-
Pot Cap-1 Maneuver	0	167	0	-	-	-
Stage 1	0	-	0	-	-	-
Stage 2	0	-	0	-	-	-
Platoon blocked, %				-	-	-
Mov Cap-1 Maneuver	-	167	-	-	-	-
Mov Cap-2 Maneuver	-	-	-	-	-	-
Stage 1	-	-	-	-	-	-
Stage 2	-	-	-	-	-	-

Approach	EB	NB	SB
HCM Control Delay, s	30.1	0	0
HCM LOS	D		

Minor Lane/Major Mvmt	NBT	EBLn1	SBT	SBR
Capacity (veh/h)	-	167	-	-
HCM Lane V/C Ratio	-	0.144	-	-
HCM Control Delay (s)	-	30.1	-	-
HCM Lane LOS	-	D	-	-
HCM 95th %tile Q(veh)	-	0.5	-	-

Intersection	
Int Delay, s/veh	0.2

Movement	EBL	EBR	NBL	NBT	SBT	SBR
Lane Configurations		↱		↑↑↑	↑↑↑	↱
Traffic Vol, veh/h	0	27	0	2950	2267	33
Future Vol, veh/h	0	27	0	2950	2267	33
Conflicting Peds, #/hr	0	0	0	0	0	0
Sign Control	Stop	Stop	Free	Free	Free	Free
RT Channelized	-	None	-	None	-	None
Storage Length	-	-	-	-	-	120
Veh in Median Storage, #	0	-	-	0	0	-
Grade, %	0	-	-	0	0	-
Peak Hour Factor	100	100	100	100	100	100
Heavy Vehicles, %	3	3	3	3	3	3
Mvmt Flow	0	27	0	2950	2267	33

Major/Minor	Minor2		Major1		Major2	
Conflicting Flow All	-	1134	-	0	-	0
Stage 1	-	-	-	-	-	-
Stage 2	-	-	-	-	-	-
Critical Hdwy	-	7.16	-	-	-	-
Critical Hdwy Stg 1	-	-	-	-	-	-
Critical Hdwy Stg 2	-	-	-	-	-	-
Follow-up Hdwy	-	3.93	-	-	-	-
Pot Cap-1 Maneuver	0	167	0	-	-	-
Stage 1	0	-	0	-	-	-
Stage 2	0	-	0	-	-	-
Platoon blocked, %				-	-	-
Mov Cap-1 Maneuver	-	167	-	-	-	-
Mov Cap-2 Maneuver	-	-	-	-	-	-
Stage 1	-	-	-	-	-	-
Stage 2	-	-	-	-	-	-

Approach	EB	NB	SB
HCM Control Delay, s	30.7	0	0
HCM LOS	D		

Minor Lane/Major Mvmt	NBT	EBLn1	SBT	SBR
Capacity (veh/h)	-	167	-	-
HCM Lane V/C Ratio	-	0.162	-	-
HCM Control Delay (s)	-	30.7	-	-
HCM Lane LOS	-	D	-	-
HCM 95th %tile Q(veh)	-	0.6	-	-

Intersection	
Int Delay, s/veh	0.3

Movement	EBL	EBT	WBT	WBR	SBL	SBR
Lane Configurations						
Traffic Vol, veh/h	8	388	137	12	8	0
Future Vol, veh/h	8	388	137	12	8	0
Conflicting Peds, #/hr	0	0	0	0	0	0
Sign Control	Free	Free	Free	Free	Stop	Stop
RT Channelized	-	None	-	None	-	None
Storage Length	-	-	-	-	0	-
Veh in Median Storage, #	-	0	0	-	0	-
Grade, %	-	0	0	-	0	-
Peak Hour Factor	100	100	100	100	100	100
Heavy Vehicles, %	3	3	3	3	3	3
Mvmt Flow	8	388	137	12	8	0

Major/Minor	Major1		Major2		Minor2	
Conflicting Flow All	149	0	-	0	353	75
Stage 1	-	-	-	-	143	-
Stage 2	-	-	-	-	210	-
Critical Hdwy	4.16	-	-	-	6.86	6.96
Critical Hdwy Stg 1	-	-	-	-	5.86	-
Critical Hdwy Stg 2	-	-	-	-	5.86	-
Follow-up Hdwy	2.23	-	-	-	3.53	3.33
Pot Cap-1 Maneuver	1423	-	-	-	616	968
Stage 1	-	-	-	-	866	-
Stage 2	-	-	-	-	802	-
Platoon blocked, %		-	-	-		
Mov Cap-1 Maneuver	1423	-	-	-	612	968
Mov Cap-2 Maneuver	-	-	-	-	612	-
Stage 1	-	-	-	-	860	-
Stage 2	-	-	-	-	802	-

Approach	EB	WB	SB
HCM Control Delay, s	0.2	0	11
HCM LOS			B

Minor Lane/Major Mvmt	EBL	EBT	WBT	WBR	SBLn1
Capacity (veh/h)	1423	-	-	-	612
HCM Lane V/C Ratio	0.006	-	-	-	0.013
HCM Control Delay (s)	7.5	0	-	-	11
HCM Lane LOS	A	A	-	-	B
HCM 95th %tile Q(veh)	0	-	-	-	0

Intersection	
Int Delay, s/veh	0.4

Movement	EBL	EBT	WBT	WBR	SBL	SBR
Lane Configurations						
Traffic Vol, veh/h	10	388	137	17	12	1
Future Vol, veh/h	10	388	137	17	12	1
Conflicting Peds, #/hr	0	0	0	0	0	0
Sign Control	Free	Free	Free	Free	Stop	Stop
RT Channelized	-	None	-	None	-	None
Storage Length	-	-	-	-	0	-
Veh in Median Storage, #	-	0	0	-	0	-
Grade, %	-	0	0	-	0	-
Peak Hour Factor	100	100	100	100	100	100
Heavy Vehicles, %	3	3	3	3	3	3
Mvmt Flow	10	388	137	17	12	1

Major/Minor	Major1		Major2		Minor2	
Conflicting Flow All	154	0	-	0	360	77
Stage 1	-	-	-	-	146	-
Stage 2	-	-	-	-	214	-
Critical Hdwy	4.16	-	-	-	6.86	6.96
Critical Hdwy Stg 1	-	-	-	-	5.86	-
Critical Hdwy Stg 2	-	-	-	-	5.86	-
Follow-up Hdwy	2.23	-	-	-	3.53	3.33
Pot Cap-1 Maneuver	1417	-	-	-	610	965
Stage 1	-	-	-	-	863	-
Stage 2	-	-	-	-	798	-
Platoon blocked, %		-	-	-		
Mov Cap-1 Maneuver	1417	-	-	-	605	965
Mov Cap-2 Maneuver	-	-	-	-	605	-
Stage 1	-	-	-	-	855	-
Stage 2	-	-	-	-	798	-

Approach	EB	WB	SB
HCM Control Delay, s	0.2	0	10.9
HCM LOS			B

Minor Lane/Major Mvmt	EBL	EBT	WBT	WBR	SBLn1
Capacity (veh/h)	1417	-	-	-	623
HCM Lane V/C Ratio	0.007	-	-	-	0.021
HCM Control Delay (s)	7.6	0	-	-	10.9
HCM Lane LOS	A	A	-	-	B
HCM 95th %tile Q(veh)	0	-	-	-	0.1

Intersection	
Int Delay, s/veh	0.5

Movement	EBL	EBT	WBT	WBR	SBL	SBR
Lane Configurations						
Traffic Vol, veh/h	20	400	311	8	0	16
Future Vol, veh/h	20	400	311	8	0	16
Conflicting Peds, #/hr	0	0	0	0	0	0
Sign Control	Free	Free	Free	Free	Stop	Stop
RT Channelized	-	None	-	None	-	None
Storage Length	-	-	-	-	0	-
Veh in Median Storage, #	-	0	0	-	0	-
Grade, %	-	0	0	-	0	-
Peak Hour Factor	100	100	100	100	100	100
Heavy Vehicles, %	3	3	3	3	3	3
Mvmt Flow	20	400	311	8	0	16

Major/Minor	Major1		Major2		Minor2	
Conflicting Flow All	319	0	-	0	555	160
Stage 1	-	-	-	-	315	-
Stage 2	-	-	-	-	240	-
Critical Hdwy	4.16	-	-	-	6.86	6.96
Critical Hdwy Stg 1	-	-	-	-	5.86	-
Critical Hdwy Stg 2	-	-	-	-	5.86	-
Follow-up Hdwy	2.23	-	-	-	3.53	3.33
Pot Cap-1 Maneuver	1231	-	-	-	459	854
Stage 1	-	-	-	-	710	-
Stage 2	-	-	-	-	774	-
Platoon blocked, %		-	-	-		
Mov Cap-1 Maneuver	1231	-	-	-	449	854
Mov Cap-2 Maneuver	-	-	-	-	449	-
Stage 1	-	-	-	-	695	-
Stage 2	-	-	-	-	774	-

Approach	EB	WB	SB
HCM Control Delay, s	0.5	0	9.3
HCM LOS			A

Minor Lane/Major Mvmt	EBL	EBT	WBT	WBR	SBLn1
Capacity (veh/h)	1231	-	-	-	854
HCM Lane V/C Ratio	0.016	-	-	-	0.019
HCM Control Delay (s)	8	0.1	-	-	9.3
HCM Lane LOS	A	A	-	-	A
HCM 95th %tile Q(veh)	0.1	-	-	-	0.1

Intersection	
Int Delay, s/veh	0.9

Movement	EBL	EBT	WBT	WBR	SBL	SBR
Lane Configurations						
Traffic Vol, veh/h	28	400	311	24	17	22
Future Vol, veh/h	28	400	311	24	17	22
Conflicting Peds, #/hr	0	0	0	0	0	0
Sign Control	Free	Free	Free	Free	Stop	Stop
RT Channelized	-	None	-	None	-	None
Storage Length	-	-	-	-	0	-
Veh in Median Storage, #	-	0	0	-	0	-
Grade, %	-	0	0	-	0	-
Peak Hour Factor	100	100	100	100	100	100
Heavy Vehicles, %	3	3	3	3	3	3
Mvmt Flow	28	400	311	24	17	22

Major/Minor	Major1		Major2		Minor2	
Conflicting Flow All	335	0	-	0	579	168
Stage 1	-	-	-	-	323	-
Stage 2	-	-	-	-	256	-
Critical Hdwy	4.16	-	-	-	6.86	6.96
Critical Hdwy Stg 1	-	-	-	-	5.86	-
Critical Hdwy Stg 2	-	-	-	-	5.86	-
Follow-up Hdwy	2.23	-	-	-	3.53	3.33
Pot Cap-1 Maneuver	1214	-	-	-	443	844
Stage 1	-	-	-	-	703	-
Stage 2	-	-	-	-	760	-
Platoon blocked, %		-	-	-		
Mov Cap-1 Maneuver	1214	-	-	-	430	844
Mov Cap-2 Maneuver	-	-	-	-	430	-
Stage 1	-	-	-	-	682	-
Stage 2	-	-	-	-	760	-

Approach	EB	WB	SB
HCM Control Delay, s	0.6	0	11.5
HCM LOS			B

Minor Lane/Major Mvmt	EBL	EBT	WBT	WBR	SBLn1
Capacity (veh/h)	1214	-	-	-	595
HCM Lane V/C Ratio	0.023	-	-	-	0.066
HCM Control Delay (s)	8	0.1	-	-	11.5
HCM Lane LOS	A	A	-	-	B
HCM 95th %tile Q(veh)	0.1	-	-	-	0.2

HCS Signalized Intersection Results Summary

General Information				Intersection Information	
Agency				Duration, h	0.250
Analyst		Analysis Date		Area Type	Other
Jurisdiction		Time Period		PHF	1.00
Urban Street	Coors	Analysis Year		Analysis Period	1> 7:00
Intersection	Sequoia	File Name	2024_ANX_Exp.xus		
Project Description					

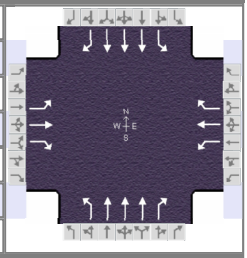

Demand Information	EB			WB			NB			SB		
Approach Movement	L	T	R	L	T	R	L	T	R	L	T	R
Demand (*v*), veh/h	60	28	232	70	36	36	60	2092	28	36	2960	12

Signal Information			
Cycle, s	150.0	Reference Phase	2
Offset, s	86	Reference Point	Begin
Uncoordinated	No	Simult. Gap E/W	On
Force Mode	Fixed	Simult. Gap N/S	On

Green	2.3	0.9	107.9	24.4	0.0	0.0
Yellow	3.0	0.0	4.5	3.5	0.0	0.0
Red	0.5	0.0	1.0	2.0	0.0	0.0

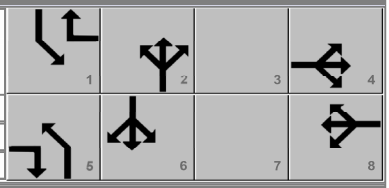

Timer Results	EBL	EBT	WBL	WBT	NBL	NBT	SBL	SBT
Assigned Phase		4		8	5	2	1	6
Case Number		5.0		5.0	1.1	3.0	1.1	3.0
Phase Duration, s		29.9		29.9	6.7	114.2	5.8	113.4
Change Period, ($Y+R_c$), s		5.5		5.5	3.5	5.5	3.5	5.5
Max Allow Headway (*MAH*), s		4.3		4.3	4.0	0.0	4.0	0.0
Queue Clearance Time (g_s), s		23.2		10.8	3.4		2.8	
Green Extension Time (g_e), s		1.2		1.7	0.1	0.0	0.1	0.0
Phase Call Probability		1.00		1.00	0.92		0.78	
Max Out Probability		0.17		0.00	0.00		0.00	

Movement Group Results	EB			WB			NB			SB		
Approach Movement	L	T	R	L	T	R	L	T	R	L	T	R
Assigned Movement	7	4	14	3	8	18	5	2	12	1	6	16
Adjusted Flow Rate (*v*), veh/h	60	28	232	70	36	36	60	2092	28	36	2960	12
Adjusted Saturation Flow Rate (*s*), veh/h/ln	1361	1856	1572	1371	1856	1572	1767	1685	1572	1767	1685	1572
Queue Service Time (g_s), s	5.9	1.9	21.2	6.9	2.5	2.9	1.4	29.1	0.7	0.8	59.5	0.3
Cycle Queue Clearance Time (g_c), s	8.4	1.9	21.2	8.8	2.5	2.9	1.4	29.1	0.7	0.8	59.5	0.3
Green Ratio (*g/C*)	0.16	0.16	0.18	0.16	0.16	0.18	0.74	0.72	0.72	0.73	0.72	0.72
Capacity (*c*), veh/h	247	302	290	254	302	281	112	3664	1140	176	3635	1131
Volume-to-Capacity Ratio (*X*)	0.243	0.093	0.801	0.276	0.119	0.128	0.535	0.571	0.025	0.204	0.814	0.011
Back of Queue (*Q*), ft/ln (95 th percentile)	96.1	42.4	363.5	112.4	54.8	53.9	78.6	377	10.9	13.9	703.3	4.8
Back of Queue (*Q*), veh/ln (95 th percentile)	3.8	1.7	14.2	4.4	2.1	2.1	3.1	14.7	0.4	0.5	27.5	0.2
Queue Storage Ratio (*RQ*) (95 th percentile)	1.07	0.00	0.00	0.77	0.00	0.22	0.63	0.00	0.05	0.12	0.00	0.02
Uniform Delay (d_1), s/veh	57.2	53.4	58.6	57.1	53.6	51.8	33.4	9.7	5.8	9.1	14.3	6.0
Incremental Delay (d_2), s/veh	0.5	0.1	9.5	0.6	0.2	0.2	3.9	0.7	0.0	0.6	2.1	0.0
Initial Queue Delay (d_3), s/veh	0.0	0.0	0.0	0.0	0.0	0.0	0.0	0.0	0.0	0.0	0.0	0.0
Control Delay (*d*), s/veh	57.7	53.5	68.0	57.7	53.8	52.0	37.3	10.3	5.8	9.7	16.4	6.0
Level of Service (LOS)	E	D	E	E	D	D	D	B	A	A	B	A
Approach Delay, s/veh / LOS	64.8	E		55.3	E		11.0	B		16.3	B	
Intersection Delay, s/veh / LOS	18.0						B					

Multimodal Results	EB		WB		NB		SB	
Pedestrian LOS Score / LOS								
Bicycle LOS Score / LOS								

Copyright © 2023 University of Florida, All Rights Reserved.

HCS Signalized Intersection Results Summary

General Information				Intersection Information	
Agency				Duration, h	0.250
Analyst		Analysis Date		Area Type	Other
Jurisdiction		Time Period		PHF	1.00
Urban Street	Coors	Analysis Year		Analysis Period	1> 7:00
Intersection	Sequoia	File Name	2024_ABX_Exp.xus		
Project Description					

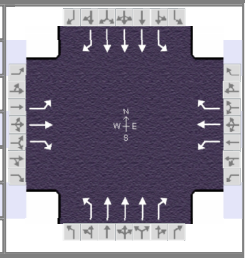

Demand Information	EB			WB			NB			SB		
Approach Movement	L	T	R	L	T	R	L	T	R	L	T	R
Demand (*v*), veh/h	64	32	236	72	40	36	68	2092	28	36	2964	12

Signal Information			
Cycle, s	150.0	Reference Phase	2
Offset, s	86	Reference Point	Begin
Uncoordinated	No	Simult. Gap E/W	On
Force Mode	Fixed	Simult. Gap N/S	On

Green	2.3	1.2	107.2	24.8	0.0	0.0
Yellow	3.0	0.0	4.5	3.5	0.0	0.0
Red	0.5	0.0	1.0	2.0	0.0	0.0

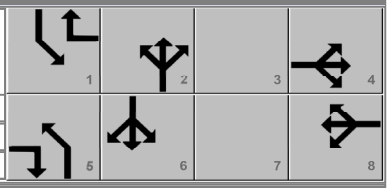

Timer Results	EBL	EBT	WBL	WBT	NBL	NBT	SBL	SBT
Assigned Phase		4		8	5	2	1	6
Case Number		5.0		5.0	1.1	3.0	1.1	3.0
Phase Duration, s		30.3		30.3	7.0	113.9	5.8	112.7
Change Period, ($Y+R_c$), s		5.5		5.5	3.5	5.5	3.5	5.5
Max Allow Headway (*MAH*), s		4.3		4.3	4.0	0.0	4.0	0.0
Queue Clearance Time (g_s), s		23.5		11.3	3.6		2.8	
Green Extension Time (g_e), s		1.3		1.8	0.1	0.0	0.1	0.0
Phase Call Probability		1.00		1.00	0.94		0.78	
Max Out Probability		0.21		0.00	0.00		0.00	

Movement Group Results	EB			WB			NB			SB		
Approach Movement	L	T	R	L	T	R	L	T	R	L	T	R
Assigned Movement	7	4	14	3	8	18	5	2	12	1	6	16
Adjusted Flow Rate (*v*), veh/h	64	32	236	72	40	36	68	2092	28	36	2964	12
Adjusted Saturation Flow Rate (*s*), veh/h/ln	1356	1856	1572	1366	1856	1572	1767	1685	1572	1767	1685	1572
Queue Service Time (g_s), s	6.3	2.2	21.5	7.1	2.8	2.9	1.6	29.4	0.8	0.8	60.6	0.3
Cycle Queue Clearance Time (g_c), s	9.1	2.2	21.5	9.3	2.8	2.9	1.6	29.4	0.8	0.8	60.6	0.3
Green Ratio (*g/C*)	0.17	0.17	0.19	0.17	0.17	0.18	0.74	0.72	0.72	0.73	0.71	0.71
Capacity (*c*), veh/h	247	306	296	254	306	284	114	3653	1136	176	3614	1124
Volume-to-Capacity Ratio (*X*)	0.259	0.104	0.797	0.284	0.131	0.127	0.594	0.573	0.025	0.205	0.820	0.011
Back of Queue (*Q*), ft/ln (95 th percentile)	102.8	48.5	367.5	115.9	60.9	53.7	89.3	381.4	11.1	14.2	718.2	4.9
Back of Queue (*Q*), veh/ln (95 th percentile)	4.0	1.9	14.4	4.5	2.4	2.1	3.5	14.9	0.4	0.6	28.1	0.2
Queue Storage Ratio (*RQ*) (95 th percentile)	1.14	0.00	0.00	0.80	0.00	0.22	0.71	0.00	0.06	0.12	0.00	0.02
Uniform Delay (d_1), s/veh	57.3	53.2	58.1	57.1	53.4	51.5	35.0	9.8	5.9	9.3	14.7	6.1
Incremental Delay (d_2), s/veh	0.5	0.1	9.2	0.6	0.2	0.2	4.8	0.7	0.0	0.6	2.2	0.0
Initial Queue Delay (d_3), s/veh	0.0	0.0	0.0	0.0	0.0	0.0	0.0	0.0	0.0	0.0	0.0	0.0
Control Delay (*d*), s/veh	57.9	53.3	67.3	57.7	53.6	51.7	39.8	10.5	5.9	9.9	17.0	6.2
Level of Service (LOS)	E	D	E	E	D	D	D	B	A	A	B	A
Approach Delay, s/veh / LOS	64.2	E		55.2	E		11.4	B		16.8	B	
Intersection Delay, s/veh / LOS	18.5						B					

Multimodal Results	EB		WB		NB		SB	
Pedestrian LOS Score / LOS								
Bicycle LOS Score / LOS								

Copyright © 2023 University of Florida, All Rights Reserved.

HCS Signalized Intersection Results Summary

General Information				Intersection Information	
Agency				Duration, h	0.250
Analyst		Analysis Date		Area Type	Other
Jurisdiction		Time Period		PHF	1.00
Urban Street	Coors	Analysis Year		Analysis Period	1> 7:00
Intersection	Sequoia	File Name	2024_PNX_Exp.xus		
Project Description					

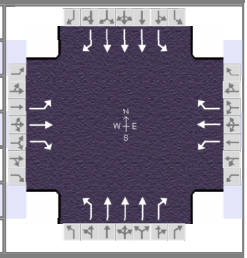

Demand Information	EB			WB			NB			SB		
Approach Movement	L	T	R	L	T	R	L	T	R	L	T	R
Demand (v), veh/h	160	148	144	112	92	68	180	2704	140	88	2136	28

Signal Information			
Cycle, s	150.0	Reference Phase	2
Offset, s	58	Reference Point	Begin
Uncoordinated	No	Simult. Gap E/W	On
Force Mode	Fixed	Simult. Gap N/S	On

Green	4.1	2.5	104.4	24.5	0.0	0.0
Yellow	3.0	0.0	4.5	3.5	0.0	0.0
Red	0.5	0.0	1.0	2.0	0.0	0.0

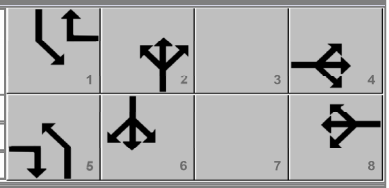

Timer Results	EBL	EBT	WBL	WBT	NBL	NBT	SBL	SBT
Assigned Phase		4		8	5	2	1	6
Case Number		5.0		5.0	1.1	3.0	1.1	3.0
Phase Duration, s		30.0		30.0	10.1	112.4	7.6	109.9
Change Period, ($Y+R_c$), s		5.5		5.5	3.5	5.5	3.5	5.5
Max Allow Headway (MAH), s		4.3		4.3	4.0	0.0	4.0	0.0
Queue Clearance Time (g_s), s		26.5		26.5	6.3		4.2	
Green Extension Time (g_e), s		0.0		0.0	0.3	0.0	0.1	0.0
Phase Call Probability		1.00		1.00	1.00		0.97	
Max Out Probability		1.00		1.00	0.04		1.00	

Movement Group Results	EB			WB			NB			SB		
Approach Movement	L	T	R	L	T	R	L	T	R	L	T	R
Assigned Movement	7	4	14	3	8	18	5	2	12	1	6	16
Adjusted Flow Rate (v), veh/h	160	148	144	112	92	68	180	2704	140	88	2136	28
Adjusted Saturation Flow Rate (s), veh/h/ln	1294	1856	1572	1230	1856	1572	1767	1685	1572	1767	1685	1572
Queue Service Time (g_s), s	18.0	10.9	12.0	13.6	6.5	5.5	4.3	49.6	4.2	2.2	33.4	0.8
Cycle Queue Clearance Time (g_c), s	24.5	10.9	12.0	24.5	6.5	5.5	4.3	49.6	4.2	2.2	33.4	0.8
Green Ratio (g/C)	0.16	0.16	0.21	0.16	0.16	0.19	0.75	0.71	0.71	0.72	0.70	0.70
Capacity (c), veh/h	203	303	326	160	303	300	215	3601	1120	136	3517	1094
Volume-to-Capacity Ratio (X)	0.789	0.488	0.441	0.701	0.304	0.227	0.839	0.751	0.125	0.649	0.607	0.026
Back of Queue (Q), ft/ln (95 th percentile)	297.4	230.3	217	217.7	144.8	102.3	235.8	603.5	62.8	112.2	437.1	12.5
Back of Queue (Q), veh/ln (95 th percentile)	11.6	9.0	8.5	8.5	5.7	4.0	9.2	23.6	2.5	4.4	17.1	0.5
Queue Storage Ratio (RQ) (95 th percentile)	3.30	0.00	0.00	1.50	0.00	0.42	1.89	0.00	0.31	0.98	0.00	0.04
Uniform Delay (d_1), s/veh	66.3	57.1	51.8	68.2	55.2	51.3	24.9	13.3	6.8	30.1	12.0	7.1
Incremental Delay (d_2), s/veh	18.5	1.2	0.9	12.8	0.6	0.4	13.0	1.5	0.2	5.2	0.8	0.0
Initial Queue Delay (d_3), s/veh	0.0	0.0	0.0	0.0	0.0	0.0	0.0	0.0	0.0	0.0	0.0	0.0
Control Delay (d), s/veh	84.8	58.3	52.8	81.1	55.8	51.7	38.0	14.8	7.0	35.3	12.8	7.1
Level of Service (LOS)	F	E	D	F	E	D	D	B	A	D	B	A
Approach Delay, s/veh / LOS	65.9	E		65.2	E		15.8	B		13.6	B	
Intersection Delay, s/veh / LOS	21.0						C					

Multimodal Results	EB		WB		NB		SB	
Pedestrian LOS Score / LOS								
Bicycle LOS Score / LOS								

Copyright © 2023 University of Florida, All Rights Reserved.

HCS Signalized Intersection Results Summary

General Information				Intersection Information	
Agency				Duration, h	0.250
Analyst		Analysis Date		Area Type	Other
Jurisdiction		Time Period		PHF	1.00
Urban Street	Coors	Analysis Year		Analysis Period	1> 7:00
Intersection	Sequoia	File Name	2024_PBX_Exp.xus		
Project Description					

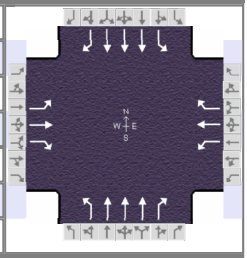

Demand Information	EB			WB			NB			SB		
Approach Movement	L	T	R	L	T	R	L	T	R	L	T	R
Demand (v), veh/h	168	152	156	112	96	68	196	2704	140	88	2140	28

Signal Information			
Cycle, s	150.0	Reference Phase	2
Offset, s	58	Reference Point	Begin
Uncoordinated	No	Simult. Gap E/W	On
Force Mode	Fixed	Simult. Gap N/S	On

Green	4.2	3.2	103.7	24.5	0.0	0.0
Yellow	3.0	0.0	4.5	3.5	0.0	0.0
Red	0.5	0.0	1.0	2.0	0.0	0.0

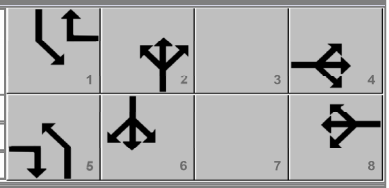

Timer Results	EBL	EBT	WBL	WBT	NBL	NBT	SBL	SBT
Assigned Phase		4		8	5	2	1	6
Case Number		5.0		5.0	1.1	3.0	1.1	3.0
Phase Duration, s		30.0		30.0	10.8	112.3	7.7	109.2
Change Period, ($Y+R_c$), s		5.5		5.5	3.5	5.5	3.5	5.5
Max Allow Headway (MAH), s		4.3		4.3	4.0	0.0	4.0	0.0
Queue Clearance Time (g_s), s		26.5		26.5	7.0		4.2	
Green Extension Time (g_e), s		0.0		0.0	0.3	0.0	0.1	0.0
Phase Call Probability		1.00		1.00	1.00		0.97	
Max Out Probability		1.00		1.00	0.08		1.00	

Movement Group Results	EB			WB			NB			SB		
Approach Movement	L	T	R	L	T	R	L	T	R	L	T	R
Assigned Movement	7	4	14	3	8	18	5	2	12	1	6	16
Adjusted Flow Rate (v), veh/h	168	152	156	112	96	68	196	2704	140	88	2140	28
Adjusted Saturation Flow Rate (s), veh/h/ln	1289	1856	1572	1225	1856	1572	1767	1685	1572	1767	1685	1572
Queue Service Time (g_s), s	17.7	11.2	13.0	13.3	6.8	5.5	5.0	49.6	4.2	2.2	34.0	0.8
Cycle Queue Clearance Time (g_c), s	24.5	11.2	13.0	24.5	6.8	5.5	5.0	49.6	4.2	2.2	34.0	0.8
Green Ratio (g/C)	0.16	0.16	0.21	0.16	0.16	0.19	0.75	0.71	0.71	0.72	0.69	0.69
Capacity (c), veh/h	200	303	334	157	303	300	221	3600	1120	136	3494	1087
Volume-to-Capacity Ratio (X)	0.841	0.502	0.468	0.715	0.317	0.226	0.888	0.751	0.125	0.647	0.613	0.026
Back of Queue (Q), ft/ln (95 th percentile)	322.5	235.8	231.5	220.1	151.4	102.3	266.2	603.6	62.8	111.3	446.1	12.8
Back of Queue (Q), veh/ln (95 th percentile)	12.6	9.2	9.0	8.6	5.9	4.0	10.4	23.6	2.5	4.3	17.4	0.5
Queue Storage Ratio (RQ) (95 th percentile)	3.58	0.00	0.00	1.52	0.00	0.42	2.13	0.00	0.31	0.97	0.00	0.05
Uniform Delay (d_1), s/veh	67.0	57.2	51.7	68.5	55.4	51.3	27.6	13.3	6.8	29.8	12.4	7.3
Incremental Delay (d_2), s/veh	26.2	1.3	1.0	14.3	0.6	0.4	20.3	1.5	0.2	5.1	0.8	0.0
Initial Queue Delay (d_3), s/veh	0.0	0.0	0.0	0.0	0.0	0.0	0.0	0.0	0.0	0.0	0.0	0.0
Control Delay (d), s/veh	93.2	58.5	52.7	82.9	56.0	51.7	47.9	14.8	7.0	35.0	13.2	7.3
Level of Service (LOS)	F	E	D	F	E	D	D	B	A	C	B	A
Approach Delay, s/veh / LOS	68.9	E		65.8	E		16.6	B		14.0	B	
Intersection Delay, s/veh / LOS	22.0						C					

Multimodal Results	EB		WB		NB		SB	
Pedestrian LOS Score / LOS								
Bicycle LOS Score / LOS								

Copyright © 2023 University of Florida, All Rights Reserved.

Global Storage (Coors & Sequoia)

Projected Turning Movements SUMMARY

PROPOSED DEVELOPMENT (2034) - 100% Development

INTERSECTION: **Summary**

Driveway "A" / Coors Blvd

(1)

3.0% Truck

	1.00			1.00			1.00			1.00		PHF
	Eastbound (Driveway "A")			Westbound (Driveway "A")			Northbound (Coors Blvd)			Southbound (Coors Blvd)		
	Left	Thru	Right	Left	Thru	Right	Left	Thru	Right	Left	Thru	Right
Existing (2023)	0	0	8	0	0	0	0	1,820	0	0	2,716	8
2034 (NO BUILD - A.M.)	*0*	*0*	*9*	*0*	*0*	*0*	*0*	*2,373*	*0*	*0*	*3,276*	*9*
2034 (BUILD - A.M.)	***0***	***0***	***10***	***0***	***0***	***0***	***0***	***2,375***	***0***	***0***	***3,276***	***12***

	1.00			1.00			1.00			1.00		PHF
	Eastbound (Driveway "A")			Westbound (Driveway "A")			Northbound (Coors Blvd)			Southbound (Coors Blvd)		
	Left	Thru	Right	Left	Thru	Right	Left	Thru	Right	Left	Thru	Right
Existing (2023)	0	0	24	0	0	0	0	2,632	0	0	1,856	24
2034 (NO BUILD - P.M.)	*0*	*0*	*27*	*0*	*0*	*0*	*0*	*3,201*	*0*	*0*	*2,455*	*27*
2034 (BUILD - P.M.)	***0***	***0***	***30***	***0***	***0***	***0***	***0***	***3,208***	***0***	***0***	***2,455***	***36***

Sequoia Rd / Driveway "B"

(3)

3.0% Truck

	1.00			1.00			1.00			1.00		PHF
	Eastbound (Sequoia Rd)			Westbound (Sequoia Rd)			Northbound (Driveway "B")			Southbound (Driveway "B")		
	Left	Thru	Right	Left	Thru	Right	Left	Thru	Right	Left	Thru	Right
Existing (2023)	8	384	0	0	136	12	0	0	0	8	0	0
2034 (NO BUILD - A.M.)	*9*	*426*	*0*	*0*	*151*	*13*	*0*	*0*	*0*	*9*	*0*	*0*
2034 (BUILD - A.M.)	***11***	***426***	***0***	***0***	***151***	***18***	***0***	***0***	***0***	***13***	***0***	***1***

	1.00			1.00			1.00			1.00		PHF
	Eastbound (Sequoia Rd)			Westbound (Sequoia Rd)			Northbound (Driveway "B")			Southbound (Driveway "B")		
	Left	Thru	Right	Left	Thru	Right	Left	Thru	Right	Left	Thru	Right
Existing (2023)	20	396	0	0	308	8	0	0	0	0	0	16
2034 (NO BUILD - P.M.)	*22*	*440*	*0*	*0*	*342*	*9*	*0*	*0*	*0*	*0*	*0*	*18*
2034 (BUILD - P.M.)	***30***	***440***	***0***	***0***	***342***	***25***	***0***	***0***	***0***	***17***	***0***	***24***

Global Storage (Coors & Sequoia)

Projected Turning Movements Worksheet

Driveway "A" / Coors Blvd

INTERSECTION: E-W Street: **Driveway "A"** (1)

N-S Street: **Coors Blvd**

Year of Existing Counts 2023

Horizon Year **2034**

	Eastbound (Driveway "A")			Westbound (Driveway "A")			Northbound (Coors Blvd)			Southbound (Coors Blvd)		
Growth Rates	1.00%			1.00%			1.00%			1.00%		
	Left	Thru	Right	Left	Thru	Right	Left	Thru	Right	Left	Thru	Right
Existing Volumes	0	0	8	0	0	0	0	1,820	0	0	2,716	8
Background Traffic Growth	0	0	1	0	0	0	0	200	0	0	299	1
Subtotal	0	0	9	0	0	0	0	2,020	0	0	3,015	9
Coors Pavilion Trips	0	0	0	0	0	0	0	0	0	0	0	0
South Coors Pavilion (Oxbow) Trips	0	0	0	0	0	0	0	0	0	0	0	0
Subtotal (NO BUILD - A.M.)	***0***	***0***	***9***	***0***	***0***	***0***	***0***	***2,373***	***0***	***0***	***3,276***	***9***
Percent Commercial Trips Generated(Entering)	*0.00%*	*0.00%*	*0.00%*	*0.00%*	*0.00%*	*0.00%*	*0.00%*	*0.00%*	*0.00%*	*0.00%*	*0.00%*	***28.43%***
Percent Commercial Trips Generated(Exiting)	*0.00%*	*0.00%*	***10.00%***	*0.00%*	*0.00%*	*0.00%*	*0.00%*	***28.43%***	*0.00%*	*0.00%*	*0.00%*	*0.00%*
Total Trips Generated	0	0	1	0	0	0	0	2	0	0	0	3
Subtotal AM Pk Hr. BUILD Volumes	**0**	**0**	**10**	**0**	**0**	**0**	**0**	**2,375**	**0**	**0**	**3,276**	**12**
Total AM Peak Hour BUILD Volumes	**0**	**0**	**10**	**0**	**0**	**0**	**0**	**2,375**	**0**	**0**	**3,276**	**12**

	Eastbound (Driveway "A")			Westbound (Driveway "A")			Northbound (Coors Blvd)			Southbound (Coors Blvd)		
	Left	Thru	Right	Left	Thru	Right	Left	Thru	Right	Left	Thru	Right
Existing Volumes	0	0	24	0	0	0	0	2,632	0	0	1,856	24
Background Traffic Growth	0	0	3	0	0	0	0	290	0	0	204	3
Subtotal	0	0	27	0	0	0	0	2,922	0	0	2,060	27
Coors Pavilion Trips	0	0	0	0	0	0	0	0	0	0	0	0
South Coors Pavilion (Oxbow) Trips	0	0	0	0	0	0	0	0	0	0	0	0
Subtotal (NO BUILD - P.M.)	***0***	***0***	***27***	***0***	***0***	***0***	***0***	***3,201***	***0***	***0***	***2,455***	***27***
Percent Commercial Trips Generated(Entering)	*0.00%*	*0.00%*	*0.00%*	*0.00%*	*0.00%*	*0.00%*	*0.00%*	*0.00%*	*0.00%*	*0.00%*	*0.00%*	***28.43%***
Percent Commercial Trips Generated(Exiting)	*0.00%*	*0.00%*	***10.00%***	*0.00%*	*0.00%*	*0.00%*	*0.00%*	***28.43%***	*0.00%*	*0.00%*	*0.00%*	*0.00%*
Total Trips Generated	0	0	3	0	0	0	0	7	0	0	0	9
Subtotal PM Pk Hr. BUILD Volumes	**0**	**0**	**30**	**0**	**0**	**0**	**0**	**3,208**	**0**	**0**	**2,455**	**36**
Total PM Peak Hour BUILD Volumes	**0**	**0**	**30**	**0**	**0**	**0**	**0**	**3,208**	**0**	**0**	**2,455**	**36**

NOTE: NO BUILD Volumes on Coors Blvd. include Coors Pavilion and Oxbow Trips

	Entering	Exiting		
Number of Commercial Trips Generated	**10**	**6**	A.M.	100% Commercial Development
	33	**26**	P.M.	

2034
NO BUILD

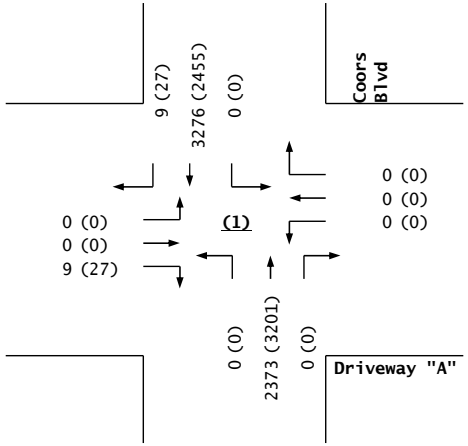

Trips

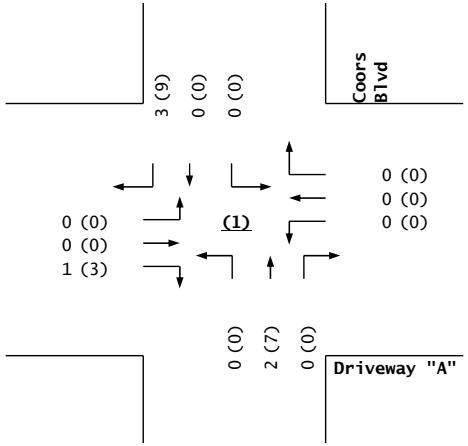

2034
BUILD

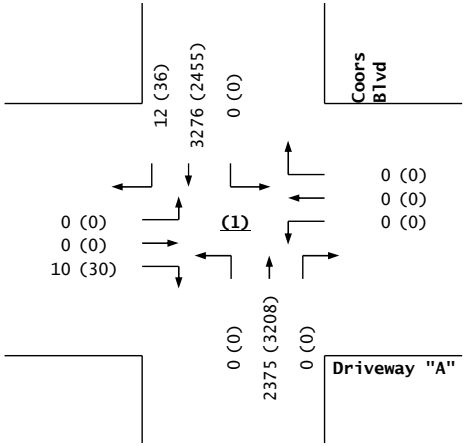

Driveway "A" / Coors Blvd

Global Storage (Coors & Sequoia)

Projected Turning Movements Worksheet

Sequoia Rd / Driveway "B"

INTERSECTION: E-W Street: **Sequoia Rd** (3)

N-S Street: **Driveway "B"**

Year of Existing Counts 2023

Horizon Year **2034**

	Eastbound (Sequoia Rd)			Westbound (Sequoia Rd)			Northbound (Driveway "B")			Southbound (Driveway "B")		
Growth Rates	1.00%			1.00%			1.00%			1.00%		
	Left	Thru	Right	Left	Thru	Right	Left	Thru	Right	Left	Thru	Right
Existing Volumes	8	384	0	0	136	12	0	0	0	8	0	0
Background Traffic Growth	1	42	0	0	15	1	0	0	0	1	0	0
Subtotal	9	426	0	0	151	13	0	0	0	9	0	0
Coors Pavilion Trips	0	0	0	0	0	0	0	0	0	0	0	0
South Coors Pavilion (Oxbow) Trips	0	0	0	0	0	0	0	0	0	0	0	0
Subtotal (NO BUILD - A.M.)	***9***	***426***	***0***	***0***	***151***	***13***	***0***	***0***	***0***	***9***	***0***	***0***
Percent Commercial Trips Generated(Entering)	***22.83%***	*0.00%*	*0.00%*	*0.00%*	*0.00%*	***48.66%***	*0.00%*	***0.08%***	*0.00%*	*0.00%*	*0.00%*	*0.00%*
Percent Commercial Trips Generated(Exiting)	*0.00%*	*0.00%*	*0.00%*	*0.00%*	*0.00%*	*0.00%*	*0.00%*	*0.00%*	*0.00%*	***67.09%***	*0.00%*	***22.91%***
Total Trips Generated	2	0	0	0	0	5	0	0	0	4	0	1
Total AM Peak Hour BUILD Volumes	**11**	**426**	**0**	**0**	**151**	**18**	**0**	**0**	**0**	**13**	**0**	**1**

	Eastbound (Sequoia Rd)			Westbound (Sequoia Rd)			Northbound (Driveway "B")			Southbound (Driveway "B")		
	Left	Thru	Right	Left	Thru	Right	Left	Thru	Right	Left	Thru	Right
Existing Volumes	20	396	0	0	308	8	0	0	0	0	0	16
Background Traffic Growth	2	44	0	0	34	1	0	0	0	0	0	2
Subtotal	22	440	0	0	342	9	0	0	0	0	0	18
Coors Pavilion Trips	0	0	0	0	0	0	0	0	0	0	0	0
South Coors Pavilion (Oxbow) Trips	0	0	0	0	0	0	0	0	0	0	0	0
Subtotal (NO BUILD - P.M.)	***22***	***440***	***0***	***0***	***342***	***9***	***0***	***0***	***0***	***0***	***0***	***18***
Percent Commercial Trips Generated(Entering)	***22.83%***	*0.00%*	*0.00%*	*0.00%*	*0.00%*	***48.66%***	*0.00%*	***0.08%***	*0.00%*	*0.00%*	*0.00%*	*0.00%*
Percent Commercial Trips Generated(Exiting)	*0.00%*	*0.00%*	*0.00%*	*0.00%*	*0.00%*	*0.00%*	*0.00%*	*0.00%*	*0.00%*	***67.09%***	*0.00%*	***22.91%***
Total Trips Generated	8	0	0	0	0	16	0	0	0	17	0	6
Total PM Peak Hour BUILD Volumes	**30**	**440**	**0**	**0**	**342**	**25**	**0**	**0**	**0**	**17**	**0**	**24**

NOTE: NO BUILD Volumes on Coors Blvd. include Coors Pavilion and Oxbow Trips

	Entering	Exiting		
Number of Commercial Trips Generated	**10**	**6**	A.M.	100% Commercial Development
	33	**26**	P.M.	

2034
NO BUILD

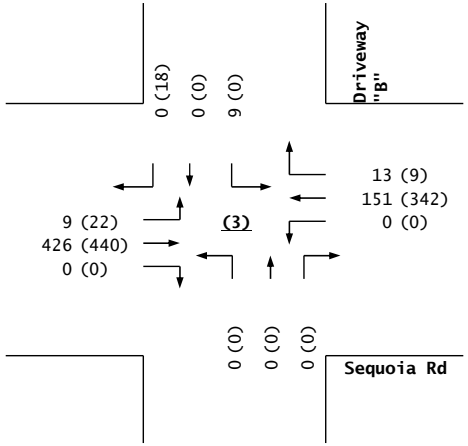

Trips

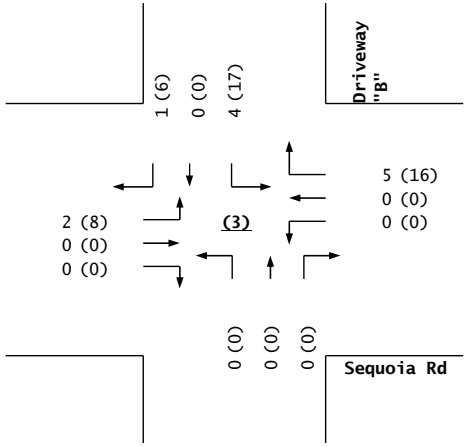

2034
BUILD

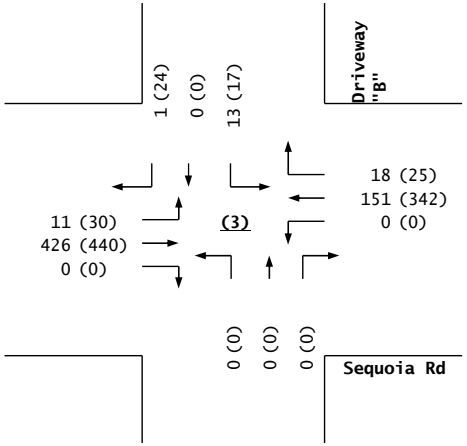

Sequoia Rd / Driveway "B"

Traffic Count Data Sheet (Raw Count)

Global Storage (Coors Blvd. / Sequoia Rd)

Year Counts Taken: **2023**

E-W Street **Sequoia Rd.**
N-S Street: **Coors Blvd.**

Speed Limit (Sequoia Rd.)= **30** MPH
Speed Limit (Coors Blvd.)= **45** MPH
Date of Count: **5/2/23**

Begin Time	End Time	Eastbound (Sequoia Rd.)			Westbound (Sequoia Rd.)			Northbound (Coors Blvd.)			Southbound (Coors Blvd.)		
		L	T	R	L	T	R	L	T	R	L	T	R
7:00 AM	7:15 AM	~~16~~	~~4~~	~~43~~	~~7~~	~~1~~	~~1~~	~~8~~	~~280~~	~~0~~	~~4~~	~~513~~	~~6~~
7:15 AM	7:30 AM	**11**	**4**	**42**	**10**	**5**	**5**	**21**	**335**	**10**	**4**	**601**	**9**
7:30 AM	7:45 AM	**15**	**7**	**58**	**17**	**9**	**5**	**15**	**436**	**7**	**5**	**665**	**3**
7:45 AM	8:00 AM	**22**	**10**	**68**	**10**	**6**	**3**	**25**	**418**	**13**	**9**	**641**	**12**
8:00 AM	8:15 AM	**23**	**3**	**43**	**10**	**3**	**3**	**24**	**387**	**8**	**10**	**538**	**12**
8:15 AM	8:30 AM	~~12~~	~~4~~	~~28~~	~~9~~	~~4~~	~~3~~	~~18~~	~~365~~	~~6~~	~~4~~	~~499~~	~~10~~
8:30 AM	8:45 AM	~~23~~	~~4~~	~~42~~	~~8~~	~~3~~	~~4~~	~~24~~	~~412~~	~~2~~	~~4~~	~~475~~	~~14~~
8:45 AM	9:00 AM	~~21~~	~~10~~	~~36~~	~~20~~	~~5~~	~~3~~	~~22~~	~~384~~	~~9~~	~~6~~	~~448~~	~~7~~
AM Peak Hour Volumes		**71**	**24**	**211**	**47**	**23**	**16**	**85**	**1576**	**38**	**28**	**2445**	**36**
% of Total Traffic		23.2%	7.8%	69.0%	54.7%	26.7%	18.6%	5.0%	92.8%	2.2%	1.1%	97.4%	1.4%
% Directional			6.7%			1.9%			36.9%			54.5%	

Begin Time	End Time	Eastbound (Sequoia Rd.)			Westbound (Sequoia Rd.)			Northbound (Coors Blvd.)			Southbound (Coors Blvd.)		
		L	T	R	L	T	R	L	T	R	L	T	R
4:00 PM	4:15 PM	~~24~~	~~9~~	~~38~~	~~35~~	~~29~~	~~10~~	~~41~~	~~488~~	~~18~~	~~15~~	~~479~~	~~12~~
4:15 PM	4:30 PM	~~19~~	~~20~~	~~38~~	~~37~~	~~19~~	~~9~~	~~41~~	~~568~~	~~22~~	~~12~~	~~440~~	~~17~~
4:30 PM	4:45 PM	**32**	**17**	**47**	**30**	**27**	**8**	**37**	**517**	**31**	**15**	**455**	**16**
4:45 PM	5:00 PM	**27**	**36**	**37**	**41**	**24**	**15**	**29**	**551**	**31**	**18**	**418**	**13**
5:00 PM	5:15 PM	**20**	**35**	**57**	**32**	**42**	**9**	**27**	**574**	**36**	**11**	**441**	**18**
5:15 PM	5:30 PM	**40**	**37**	**36**	**32**	**27**	**14**	**45**	**593**	**35**	**17**	**447**	**7**
5:30 PM	5:45 PM	~~18~~	~~19~~	~~38~~	~~34~~	~~21~~	~~15~~	~~34~~	~~511~~	~~32~~	~~11~~	~~429~~	~~13~~
5:45 PM	6:00 PM	~~24~~	~~14~~	~~34~~	~~34~~	~~24~~	~~7~~	~~35~~	~~497~~	~~29~~	~~14~~	~~402~~	~~14~~
PM Peak Hour Volumes		**119**	**125**	**177**	**135**	**120**	**46**	**138**	**2235**	**133**	**61**	**1761**	**54**
% of Total Traffic		28.3%	29.7%	42.0%	5.5%	89.2%	5.3%	44.9%	39.9%	15.3%	3.3%	93.9%	2.9%
% Directional			8.2%			49.1%			5.9%			36.8%	

Turning Movement Demand Worksheet: AM PEAK HOUR

Laneage:	1	1	1	1	1	1	1	3	1	1	3	1	
Lane Length (Ft.):	93	195	195	140	243	243	125	300	190	110	395	295	
Lane Capacity (veh.)	4	8	8	6	10	10	5	12	8	4	16	12	
% Turns	23.2%	7.8%	69.0%	54.7%	26.7%	18.6%	5.0%	92.8%	2.2%	1.1%	97.4%	1.4%	Video Time
Begin Time / End Time	Eastbound (Sequoia Rd.)			Westbound (Sequoia Rd.)			Northbound (Coors Blvd.)			Southbound (Coors Blvd.)			
	L	T	R	L	T	R	L	T	R	L	T	R	
7:00 AM 7:15 AM	~~16~~	~~4~~	~~43~~	~~7~~	~~1~~	~~1~~	~~8~~	~~280~~	~~0~~	~~4~~	~~513~~	~~6~~	
End of Period Queue		7			2			0			2		N/A
Distributed Queue	2	1	5	1	1	0	0	0	0	0	2	0	
15-Minute Demand	**18**	**5**	**48**	**8**	**2**	**1**	**8**	**280**	**0**	**4**	**515**	**6**	
7:15 AM 7:30 AM	~~11~~	~~4~~	~~42~~	~~10~~	~~5~~	~~5~~	~~21~~	~~335~~	~~10~~	~~4~~	~~601~~	~~9~~	
End of Period Queue		4			0			0			0		N/A
Distributed Queue	1	0	3	0	0	0	0	0	0	0	0	0	
Prev. Queue Credit	-2	-1	-5	-1	-1	0	0	0	0	0	-2	0	
15-Minute Demand	**10**	**3**	**40**	**9**	**4**	**5**	**21**	**335**	**10**	**4**	**599**	**9**	
7:30 AM 7:45 AM	~~15~~	~~7~~	~~58~~	~~17~~	~~9~~	~~5~~	~~15~~	~~436~~	~~7~~	~~5~~	~~665~~	~~3~~	
End of Period Queue		3			1			0			0		N/A
Distributed Queue	1	0	2	1	0	0	0	0	0	0	0	0	
Prev. Queue Credit	-1	0	-3	0	0	0	0	0	0	0	0	0	
15-Minute Demand	**15**	**7**	**57**	**18**	**9**	**5**	**15**	**436**	**7**	**5**	**665**	**3**	
7:45 AM 8:00 AM	~~22~~	~~10~~	~~68~~	~~10~~	~~6~~	~~3~~	~~25~~	~~418~~	~~13~~	~~9~~	~~641~~	~~12~~	
End of Period Queue		1			0			1			0		N/A
Distributed Queue	0	0	1	0	0	0	0	1	0	0	0	0	
Prev. Queue Credit	-1	0	-2	-1	0	0	0	0	0	0	0	0	
15-Minute Demand	**21**	**10**	**67**	**9**	**6**	**3**	**25**	**419**	**13**	**9**	**641**	**12**	
8:00 AM 8:15 AM	~~23~~	~~3~~	~~43~~	~~10~~	~~3~~	~~3~~	~~24~~	~~387~~	~~8~~	~~10~~	~~538~~	~~12~~	
End of Period Queue		3			1			1			0		N/A
Distributed Queue	1	0	2	1	0	0	0	1	0	0	0	0	
Prev. Queue Credit	0	0	-1	0	0	0	0	-1	0	0	0	0	
15-Minute Demand	**24**	**3**	**44**	**11**	**3**	**3**	**24**	**387**	**8**	**10**	**538**	**12**	
8:15 AM 8:30 AM	~~12~~	~~4~~	~~28~~	~~9~~	~~4~~	~~3~~	~~18~~	~~365~~	~~6~~	~~4~~	~~499~~	~~10~~	
End of Period Queue		5			3			0			0		N/A
Distributed Queue	1	0	3	2	1	1	0	0	0	0	0	0	
Prev. Queue Credit	-1	0	-2	-1	0	0	0	-1	0	0	0	0	
15-Minute Demand	**12**	**4**	**29**	**10**	**5**	**4**	**18**	**364**	**6**	**4**	**499**	**10**	
8:30 AM 8:45 AM	~~23~~	~~4~~	~~42~~	~~8~~	~~3~~	~~4~~	~~24~~	~~412~~	~~2~~	~~4~~	~~475~~	~~14~~	
End of Period Queue		1			1			1			0		N/A
Distributed Queue	0	0	1	1	0	0	0	1	0	0	0	0	
Prev. Queue Credit	-1	0	-3	-2	-1	-1	0	0	0	0	0	0	
15-Minute Demand	**22**	**4**	**40**	**7**	**2**	**3**	**24**	**413**	**2**	**4**	**475**	**14**	
8:45 AM 9:00 AM	~~21~~	~~10~~	~~36~~	~~20~~	~~5~~	~~3~~	~~22~~	~~384~~	~~9~~	~~6~~	~~448~~	~~7~~	
End of Period Queue		3			1			3			0		N/A
Distributed Queue	1	0	2	1	0	0	0	3	0	0	0	0	
Prev. Queue Credit	0	0	-1	-1	0	0	0	-1	0	0	0	0	
15-Minute Demand	**22**	**10**	**37**	**20**	**5**	**3**	**22**	**386**	**9**	**6**	**448**	**7**	

Turning Movement Demand Worksheet: PM PEAK HOUR

Laneage:	1	1	1	1	1	1	1	3	1	1	3	1	
Lane Length (Ft.):	93	195	195	140	243	243	125	300	190	110	395	295	
Lane Capacity (veh.)	4	8	8	6	10	10	5	12	8	4	16	12	
% Turns	28.3%	29.7%	42.0%	5.5%	89.2%	5.3%	44.9%	39.9%	15.3%	3.3%	93.9%	2.9%	Video Time
Begin Time / End Time	Eastbound (Sequoia Rd.)			Westbound (Sequoia Rd.)			Northbound (Coors Blvd.)			Southbound (Coors Blvd.)			
	L	T	R	L	T	R	L	T	R	L	T	R	
4:00 PM 4:15 PM	~~24~~	~~9~~	~~38~~	~~35~~	~~29~~	~~10~~	~~41~~	~~488~~	~~18~~	~~15~~	~~479~~	~~12~~	
End of Period Queue		1			6			0			0		N/A
Distributed Queue	0	0	0	3	2	1	0	0	0	0	0	0	
15-Minute Demand	**24**	**9**	**38**	**38**	**31**	**11**	**41**	**488**	**18**	**15**	**479**	**12**	
4:15 PM 4:30 PM	~~19~~	~~20~~	~~38~~	~~37~~	~~19~~	~~9~~	~~41~~	~~568~~	~~22~~	~~12~~	~~440~~	~~17~~	
End of Period Queue		5			4			2			0		N/A
Distributed Queue	1	1	2	2	2	1	0	0	0	0	0	0	
Prev. Queue Credit	0	0	0	-3	-2	-1	0	0	0	0	0	0	
15-Minute Demand	**20**	**21**	**40**	**36**	**19**	**9**	**41**	**568**	**22**	**12**	**440**	**17**	
4:30 PM 4:45 PM	~~32~~	~~17~~	~~47~~	~~30~~	~~27~~	~~8~~	~~37~~	~~517~~	~~31~~	~~15~~	~~455~~	~~16~~	
End of Period Queue		10			11			2			0		N/A
Distributed Queue	3	3	4	5	4	2	0	0	0	0	0	0	
Prev. Queue Credit	-1	-1	-2	-2	-2	-1	0	0	0	0	0	0	
15-Minute Demand	**34**	**19**	**49**	**33**	**29**	**9**	**37**	**517**	**31**	**15**	**455**	**16**	
4:45 PM 5:00 PM	~~27~~	~~36~~	~~37~~	~~41~~	~~24~~	~~15~~	~~29~~	~~551~~	~~31~~	~~18~~	~~418~~	~~13~~	
End of Period Queue		4			8			0			1		N/A
Distributed Queue	1	1	2	4	3	1	0	0	0	0	1	0	
Prev. Queue Credit	-3	-3	-4	-5	-4	-2	0	0	0	0	0	0	
15-Minute Demand	**25**	**34**	**35**	**40**	**23**	**14**	**29**	**551**	**31**	**18**	**419**	**13**	
5:00 PM 5:15 PM	~~20~~	~~35~~	~~57~~	~~32~~	~~42~~	~~9~~	~~27~~	~~574~~	~~36~~	~~11~~	~~441~~	~~18~~	
End of Period Queue		8			10			1			3		N/A
Distributed Queue	2	2	3	4	4	2	0	0	0	0	3	0	
Prev. Queue Credit	-1	-1	-2	-4	-3	-1	0	0	0	0	-1	0	
15-Minute Demand	**21**	**36**	**58**	**32**	**43**	**10**	**27**	**574**	**36**	**11**	**443**	**18**	
5:15 PM 5:30 PM	~~40~~	~~37~~	~~36~~	~~32~~	~~27~~	~~14~~	~~45~~	~~593~~	~~35~~	~~17~~	~~447~~	~~7~~	
End of Period Queue		7			0			0			0		N/A
Distributed Queue	2	2	3	0	0	0	0	0	0	0	0	0	
Prev. Queue Credit	-2	-2	-3	-4	-4	-2	0	0	0	0	-3	0	
15-Minute Demand	**40**	**37**	**36**	**28**	**23**	**12**	**45**	**593**	**35**	**17**	**444**	**7**	
5:30 PM 5:45 PM	~~18~~	~~19~~	~~38~~	~~34~~	~~21~~	~~15~~	~~34~~	~~511~~	~~32~~	~~11~~	~~429~~	~~13~~	
End of Period Queue		3			8			4			2		N/A
Distributed Queue	1	1	1	4	3	1	0	0	0	0	2	0	
Prev. Queue Credit	-2	-2	-3	0	0	0	0	0	0	0	0	0	
15-Minute Demand	**17**	**18**	**36**	**38**	**24**	**16**	**34**	**511**	**32**	**11**	**431**	**13**	
5:45 PM 6:00 PM	~~24~~	~~14~~	~~34~~	~~34~~	~~24~~	~~7~~	~~35~~	~~497~~	~~29~~	~~14~~	~~402~~	~~14~~	
End of Period Queue		7			3			5			0		N/A
Distributed Queue	2	2	3	1	1	0	0	0	0	0	0	0	
Prev. Queue Credit	-1	-1	-1	-4	-3	-1	0	0	0	0	-2	0	
15-Minute Demand	**25**	**15**	**36**	**31**	**22**	**6**	**35**	**497**	**29**	**14**	**400**	**14**	

Traffic Count Data Sheet (Demand Adjusted)

Year Counts Taken: **2023**

E-W Street: **Sequoia Rd.**
N-S Street: **Coors Blvd.**

Signalized

Speed Limit (Sequoia Rd.)= **30** MPH
Speed Limit (Coors Blvd.)= **45** MPH
5/2/23

Begin Time	End Time	Eastbound (Sequoia Rd.)				Westbound (Sequoia Rd.)				Northbound (Coors Blvd.)				Southbound (Coors Blvd.)			
		L	T	R	Peds	L	T	R	Peds	L	T	R	Peds	L	T	R	Peds
7:00 AM	7:15 AM	~~18~~	~~5~~	~~48~~	~~0~~	~~8~~	~~2~~	~~1~~	~~0~~	~~8~~	~~280~~	~~0~~	~~0~~	~~4~~	~~515~~	~~6~~	~~0~~
7:15 AM	7:30 AM	**10**	**3**	**40**	**0**	**9**	**4**	**5**	**0**	**21**	**335**	**10**	**0**	**4**	**599**	**9**	**0**
7:30 AM	7:45 AM	**15**	**7**	**57**	**0**	**18**	**9**	**5**	**0**	**15**	**436**	**7**	**0**	**5**	**665**	**3**	**0**
7:45 AM	8:00 AM	**21**	**10**	**67**	**0**	**9**	**6**	**3**	**0**	**25**	**419**	**13**	**0**	**9**	**641**	**12**	**0**
8:00 AM	8:15 AM	**24**	**3**	**44**	**0**	**11**	**3**	**3**	**0**	**24**	**387**	**8**	**0**	**10**	**538**	**12**	**0**
8:15 AM	8:30 AM	~~12~~	~~4~~	~~29~~	~~0~~	~~10~~	~~5~~	~~4~~	~~0~~	~~18~~	~~364~~	~~6~~	~~0~~	~~4~~	~~499~~	~~10~~	~~1~~
8:30 AM	8:45 AM	~~22~~	~~4~~	~~40~~	~~0~~	~~7~~	~~2~~	~~3~~	~~0~~	~~24~~	~~413~~	~~2~~	~~0~~	~~4~~	~~475~~	~~14~~	~~0~~
8:45 AM	9:00 AM	~~22~~	~~10~~	~~37~~	~~0~~	~~20~~	~~5~~	~~3~~	~~0~~	~~22~~	~~386~~	~~9~~	~~0~~	~~6~~	~~448~~	~~7~~	~~0~~
AM Peak Hour Volumes		**70**	**23**	**208**	0	**47**	**22**	**16**	0	**85**	**1577**	**38**	0	**28**	**2443**	**36**	0
Percent Approach		23.3%	7.6%	69.1%		55.3%	25.9%	18.8%		5.0%	92.8%	2.2%		1.1%	97.4%	1.4%	

Begin Time	End Time	Eastbound (Sequoia Rd.)				Westbound (Sequoia Rd.)				Northbound (Coors Blvd.)				Southbound (Coors Blvd.)			
		L	T	R	Peds	L	T	R	Peds	L	T	R	Peds	L	T	R	Peds
4:00 PM	4:15 PM	~~24~~	~~9~~	~~38~~	~~0~~	~~38~~	~~31~~	~~11~~	~~0~~	~~41~~	~~488~~	~~18~~	~~0~~	~~15~~	~~479~~	~~12~~	~~0~~
4:15 PM	4:30 PM	~~20~~	~~21~~	~~40~~	~~0~~	~~36~~	~~19~~	~~9~~	~~0~~	~~41~~	~~568~~	~~22~~	~~0~~	~~12~~	~~440~~	~~17~~	~~0~~
4:30 PM	4:45 PM	**34**	**19**	**49**	**0**	**33**	**29**	**9**	**0**	**37**	**517**	**31**	**0**	**15**	**455**	**16**	**0**
4:45 PM	5:00 PM	**25**	**34**	**35**	**0**	**40**	**23**	**14**	**0**	**29**	**551**	**31**	**0**	**18**	**419**	**13**	**0**
5:00 PM	5:15 PM	**21**	**36**	**58**	**0**	**32**	**43**	**10**	**0**	**27**	**574**	**36**	**0**	**11**	**443**	**18**	**0**
5:15 PM	5:30 PM	**40**	**37**	**36**	**0**	**28**	**23**	**12**	**0**	**45**	**593**	**35**	**0**	**17**	**444**	**7**	**0**
5:30 PM	5:45 PM	~~17~~	~~18~~	~~36~~	~~0~~	~~38~~	~~24~~	~~16~~	~~0~~	~~34~~	~~511~~	~~32~~	~~0~~	~~11~~	~~431~~	~~13~~	~~0~~
5:45 PM	6:00 PM	~~25~~	~~15~~	~~36~~	~~0~~	~~31~~	~~22~~	~~6~~	~~0~~	~~35~~	~~497~~	~~29~~	~~0~~	~~14~~	~~400~~	~~14~~	~~0~~
PM Peak Hour Volumes		**120**	**126**	**178**	0	**133**	**118**	**45**	0	**138**	**2235**	**133**	0	**61**	**1761**	**54**	0
Percent Approach		28.3%	29.7%	42.0%		44.9%	39.9%	15.2%		5.5%	89.2%	5.3%		3.3%	93.9%	2.9%	

AM Peak Hour Raw Count	71	24	211	47	23	16	85	1576	38	28	2445	36
% Change	-1%	-4%	-1%	0%	-4%	0%	0%	0%	0%	0%	0%	0%
PM Peak Hour Raw Count	119	125	177	135	120	46	138	2235	133	61	1761	54
% Change	1%	1%	1%	-1%	-2%	-2%	0%	0%	0%	0%	0%	0%

INPUT DATA IN YELLOW HIGHLIGTED CELLS ONLY

Global Storage (Coors Blvd. / Sequoia Rd)

Projected Turning Movements Worksheet

Sequoia Rd. / Coors Blvd.

MULTIPLE PERIOD ANALYSIS WORKSHEET

INTERSECTION: E-W Street: **Sequoia Rd.** (2)
N-S Street: **Coors Blvd.**

Year of Existing Counts 2023
Horizon Year **2034**

NOTES

1. INPUT Trip Generation Rates

	Entering	Exiting		
Retail/Shopping Center (Hourly)	**10**	**6**	A.M.	100% Retail Development
	33	**26**	P.M.	

2. Calculate Pass-by Trips
3. INPUT Previous Development Volumes and % of Trips Generated

Growth Rates 1.00% 1.00% 1.00% 1.00%

AM Peak

(Hourly Demand Volumes - AM Peak)

		Eastbound (Sequoia Rd.)			Westbound (Sequoia Rd.)			Northbound (Coors Blvd.)			Southbound (Coors Blvd.)		
		Left	Thru	Right	Left	Thru	Right	Left	Thru	Right	Left	Thru	Right
Existing Volumes (Demand) - Period 1-	7:00 AM	18	5	48	8	2	1	8	280	0	4	515	6
Existing Volumes (Demand) - Period 2-	7:15 AM	10	3	40	9	4	5	21	335	10	4	599	9
Existing Volumes (Demand) - Period 3-	7:30 AM	15	7	57	18	9	5	15	436	7	5	665	3
Existing Volumes (Demand) - Period 4-	7:45 AM	21	10	67	9	6	3	25	419	13	9	641	12
Existing Volumes (Demand) - Period 5-	8:00 AM	24	3	44	11	3	3	24	387	8	10	538	12
Existing Volumes (Demand) - Period 6-	8:15 AM	12	4	29	10	5	4	18	364	6	4	499	10
Existing Volumes (Demand) - Period 7-	8:30 AM	22	4	40	7	2	3	24	413	2	4	475	14
Existing Volumes (Demand) - Period 8-	8:45 AM	22	10	37	20	5	3	22	386	9	6	448	7
Maximum Existing AM Volumes		**15**	**7**	**57**	**18**	**9**	**5**	**15**	**436**	**7**	**5**	**665**	**3**
Background Traffic Growth		2	1	6	2	1	1	2	48	1	1	73	0
Coors Pavilion Development		0	0	0	0	0	2	0	37	0	2	31	0
South Coors Pavilion (Oxbow) Development		0	0	0	0	0	2	0	46	0	2	37	0
AM Peak NO BUILD Volumes - Preiod 1		**20**	**6**	**54**	**10**	**3**	**6**	**10**	**411**	**1**	**9**	**656**	**6**
AM Peak NO BUILD Volumes - Period 2		**12**	**4**	**46**	**11**	**5**	**10**	**23**	**466**	**11**	**9**	**740**	**9**
AM Peak NO BUILD Volumes - Preiod 3		**17**	**8**	**63**	**20**	**10**	**10**	**17**	**567**	**8**	**10**	**806**	**3**
AM Peak NO BUILD Volumes - Period 4		**23**	**11**	**73**	**11**	**7**	**8**	**27**	**550**	**14**	**14**	**782**	**12**
AM Peak NO BUILD Volumes - Preiod 5		**26**	**4**	**50**	**13**	**4**	**8**	**26**	**518**	**9**	**15**	**679**	**12**
AM Peak NO BUILD Volumes - Period 6		**14**	**5**	**35**	**12**	**6**	**9**	**20**	**495**	**7**	**9**	**640**	**10**
AM Peak NO BUILD Volumes - Preiod 7		**24**	**5**	**46**	**9**	**3**	**8**	**26**	**544**	**3**	**9**	**616**	**14**
AM Peak NO BUILD Volumes - Period 8		**24**	**11**	**43**	**22**	**6**	**8**	**24**	**517**	**10**	**11**	**589**	**7**
Maximum AM NO BUILD Volumes		**17**	**8**	**63**	**20**	**10**	**10**	**17**	**567**	**8**	**10**	**806**	**3**
Percent Commercial Trips Generated(Entering)		*0.00%*	*0.00%*	*0.00%*	*0.00%*	***0.97%***	*0.00%*	***47.69%***	*0.00%*	*0.00%*	*0.00%*	*0.00%*	*0.00%*
Percent Commercial Trips Generated(Exiting)		***28.43%***	***0.97%***	***37.69%***	*0.00%*	*0.00%*	*0.00%*	*0.00%*	*0.00%*	*0.00%*	*0.00%*	***10.00%***	*0.00%*
Total Primary Trips Generated		1	1	1	0	1	0	2	0	0	0	1	0
Pass-by Trip Adjustments		*0*	*0*	*0*	*0*	*0*	*0*	*0*	*0*	*0*	*0*	*0*	*0*
AM Peak BUILD Volumes - Preiod 1		**21**	**7**	**55**	**10**	**4**	**6**	**12**	**411**	**1**	**9**	**657**	**6**
AM Peak BUILD Volumes - Period 2		**13**	**5**	**47**	**11**	**6**	**10**	**25**	**466**	**11**	**9**	**741**	**9**
AM Peak BUILD Volumes - Preiod 3		**18**	**9**	**64**	**20**	**11**	**10**	**19**	**567**	**8**	**10**	**807**	**3**
AM Peak BUILD Volumes - Preiod 4		**24**	**12**	**74**	**11**	**8**	**8**	**29**	**550**	**14**	**14**	**783**	**12**
AM Peak BUILD Volumes - Period 5		**27**	**5**	**51**	**13**	**5**	**8**	**28**	**518**	**9**	**15**	**680**	**12**
AM Peak BUILD Volumes - Preiod 6		**15**	**6**	**36**	**12**	**7**	**9**	**22**	**495**	**7**	**9**	**641**	**10**
AM Peak BUILD Volumes - Preiod 7		**25**	**6**	**47**	**9**	**4**	**8**	**28**	**544**	**3**	**9**	**617**	**14**
AM Peak BUILD Volumes - Period 8		**25**	**12**	**44**	**22**	**7**	**8**	**26**	**517**	**10**	**11**	**590**	**7**
Maximum AM BUILD Volumes (Demand)		**18**	**9**	**64**	**20**	**11**	**10**	**19**	**567**	**8**	**10**	**807**	**3**

1.00% 1.00% 1.00% 1.00%

PM Peak

(Hourly Demand Volumes - PM Peak)

		Eastbound (Sequoia Rd.)			Westbound (Sequoia Rd.)			Northbound (Coors Blvd.)			Southbound (Coors Blvd.)		
		Left	Thru	Right	Left	Thru	Right	Left	Thru	Right	Left	Thru	Right
Existing Volumes (Demand) - Period 1-	4:00 PM	24	9	38	38	31	11	41	488	18	15	479	12
Existing Volumes (Demand) - Period 2-	4:15 PM	20	21	40	36	19	9	41	568	22	12	440	17
Existing Volumes (Demand) - Period 3-	4:30 PM	34	19	49	33	29	9	37	517	31	15	455	16
Existing Volumes (Demand) - Period 4-	4:45 PM	25	34	35	40	23	14	29	551	31	18	419	13
Existing Volumes (Demand) - Period 5-	5:00 PM	21	36	58	32	43	10	27	574	36	11	443	18
Existing Volumes (Demand) - Period 6-	5:15 PM	40	37	36	28	23	12	45	593	35	17	444	7
Existing Volumes (Demand) - Period 7-	5:30 PM	17	18	36	38	24	16	34	511	32	11	431	13
Existing Volumes (Demand) - Period 8-	5:45 PM	25	15	36	31	22	6	35	497	29	14	400	14
Maximum Existing PM Volumes		**40**	**37**	**36**	**28**	**23**	**12**	**45**	**593**	**35**	**17**	**444**	**7**
Background Traffic Growth		4	4	4	3	3	1	5	65	4	2	49	1
Coors Pavilion Development		0	0	0	0	0	2	0	29	0	2	30	0
South Coors Pavilion (Oxbow) Development		0	0	0	0	0	3	0	48	0	3	56	0
PM Peak NO BUILD Volumes - Preiod 1		**28**	**13**	**42**	**41**	**34**	**17**	**46**	**630**	**22**	**22**	**614**	**13**
PM Peak NO BUILD Volumes - Period 2		**24**	**25**	**44**	**39**	**22**	**15**	**46**	**710**	**26**	**19**	**575**	**18**
PM Peak NO BUILD Volumes - Preiod 3		**38**	**23**	**53**	**36**	**32**	**15**	**42**	**659**	**35**	**22**	**590**	**17**
PM Peak NO BUILD Volumes - Period 4		**29**	**38**	**39**	**43**	**26**	**20**	**34**	**693**	**35**	**25**	**554**	**14**
PM Peak NO BUILD Volumes - Preiod 5		**25**	**40**	**62**	**35**	**46**	**16**	**32**	**716**	**40**	**18**	**578**	**19**

INPUT DATA IN YELLOW HIGHLIGTED CELLS ONLY

Global Storage (Coors Blvd. / Sequoia Rd)

Projected Turning Movements Worksheet

Sequoia Rd. / Coors Blvd.

MULTIPLE PERIOD ANALYSIS WORKSHEET

INTERSECTION: E-W Street: **Sequoia Rd.** (2)

N-S Street: **Coors Blvd.**

Year of Existing Counts 2023

Horizon Year **2034**

NOTES

1. INPUT Trip Generation Rates

	Entering	Exiting		
Retail/Shopping Center (Hourly)	**10**	**6**	A.M.	100% Retail Development
	33	**26**	P.M.	

2. Calculate Pass-by Trips

3. INPUT Previous Development Volumes and % of Trips Generated

Growth Rates		**1.00%**			**1.00%**			**1.00%**			**1.00%**	
PM Peak NO BUILD Volumes - Period 6	44	41	40	31	26	18	50	735	39	24	579	8
PM Peak NO BUILD Volumes - Preiod 7	21	22	40	41	27	22	39	653	36	18	566	14
PM Peak NO BUILD Volumes - Period 8	29	19	40	34	25	12	40	639	33	21	535	15
Maximum PM NO BUILD Volumes	44	41	40	31	26	18	50	735	39	24	579	8
Percent Commercial Trips Generated(Entering)	*0.00%*	*0.00%*	*0.00%*	*0.00%*	***0.97%***	*0.00%*	***47.69%***	*0.00%*	*0.00%*	*0.00%*	*0.00%*	*0.00%*
Percent Commercial Trips Generated(Exiting)	***28.43%***	***0.97%***	***37.69%***	*0.00%*	*0.00%*	*0.00%*	*0.00%*	*0.00%*	*0.00%*	*0.00%*	***10.00%***	*0.00%*
Total Primary Trips Generated	2	1	3	0	1	0	4	0	0	0	1	0
Pass-by Trip Adjustments	*0*	*0*	*0*	*0*	*0*	*0*	*0*	*0*	*0*	*0*	*0*	*0*
PM Peak BUILD Volumes - Preiod 1	30	14	45	41	35	17	50	630	22	22	615	13
PM Peak BUILD Volumes - Period 2	26	26	47	39	23	15	50	710	26	19	576	18
PM Peak BUILD Volumes - Preiod 3	40	24	56	36	33	15	46	659	35	22	591	17
PM Peak BUILD Volumes - Preiod 4	31	39	42	43	27	20	38	693	35	25	555	14
PM Peak BUILD Volumes - Period 5	27	41	65	35	47	16	36	716	40	18	579	19
PM Peak BUILD Volumes - Preiod 6	46	42	43	31	27	18	54	735	39	24	580	8
PM Peak BUILD Volumes - Preiod 7	23	23	43	41	28	22	43	653	36	18	567	14
PM Peak BUILD Volumes - Period 8	31	20	43	34	26	12	44	639	33	21	536	15
Maximum PM BUILD Volumes	46	42	43	31	27	18	54	735	39	24	580	8

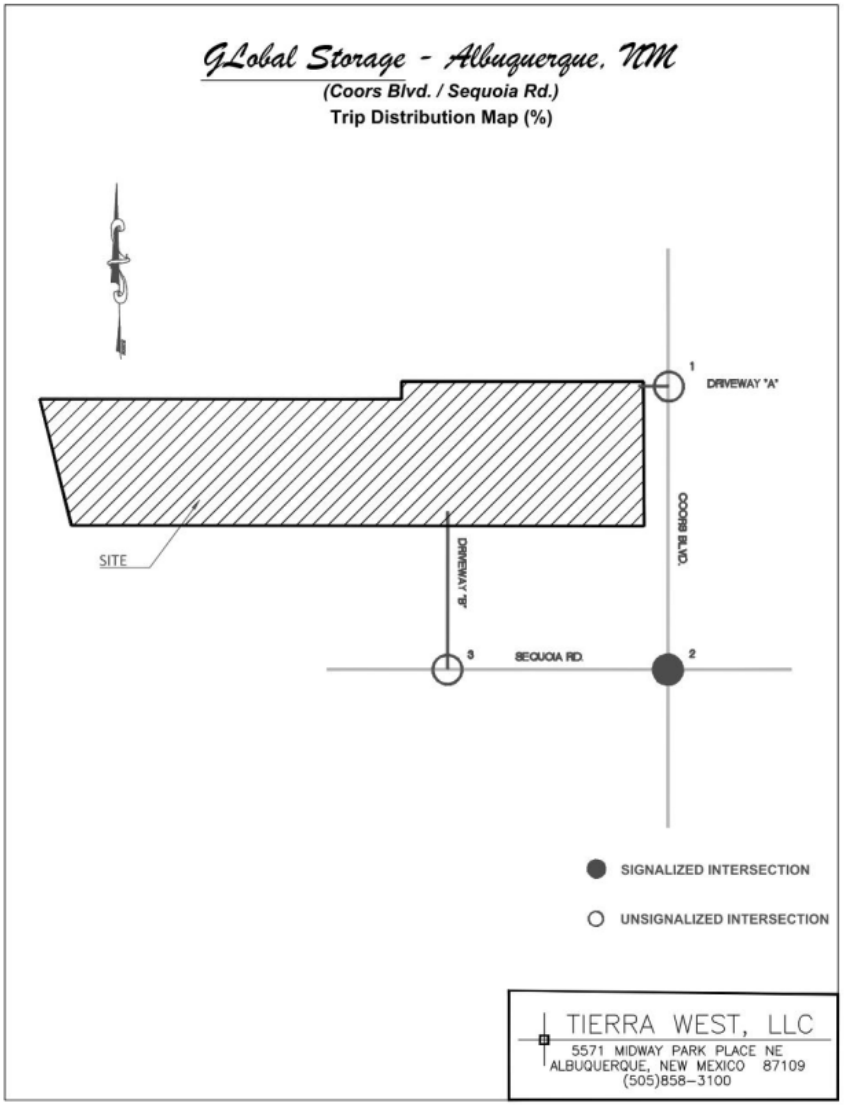

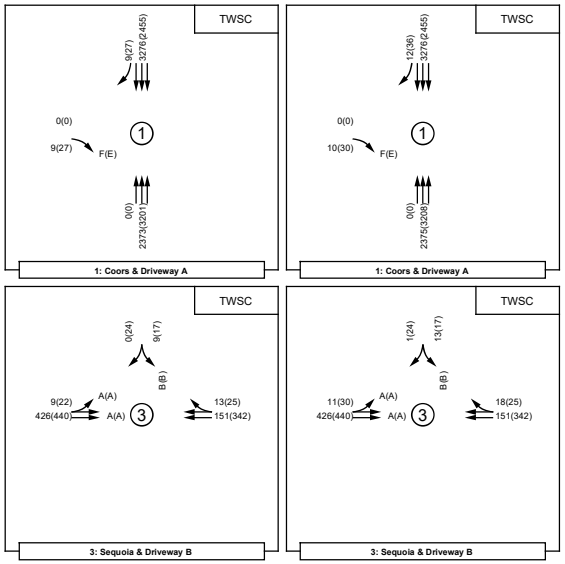

Global Storage Development
(NW Corner of Coors Blvd. / Sequoia Rd.)
LOS / Volume Analysis Map

AM(PM)

Synchro Results Summary Sheet

1: Coors & Driveway A

2034_Conditions

Driveway "A"

Coors Blvd.

Unsignalized

Coors Blvd. / Driveway "A" 2034_Conditions	EB (Driveway "A")			NB (Coors Blvd.)			SB (Coors Blvd.)		
	L	T	R	L	T	R	L	T	R
Existing Lane Geometry			1		3			3	1
AM Peak Hour									
2034 NO BUILD Volumes			9		2,373			3,276	9
V/C Ratio			0.12						
Level-of-Service			F						
Control Delay (Seconds)			58.6						
Intersection LOS	**TWSC**								
95th Percentile Queue (veh)			0.4						
2034 BUILD Volumes			10		2,375			3,276	12
V/C Ratio			0.13						
Level-of-Service			F						
Control Delay (Seconds)			59.4						
Intersection LOS	**TWSC**								
95th Percentile Queue (veh)			0.4						

PM Peak Hour									
2034 NO BUILD Volumes			27		3,201			2,455	27
V/C Ratio			0.19						
Level-of-Service			E						
Control Delay (Seconds)			35.4						
Intersection LOS	**TWSC**								
95th Percentile Queue (veh)			0.7						
2034 BUILD Volumes			30		3,208			2,455	36
V/C Ratio			0.21						
Level-of-Service			E						
Control Delay (Seconds)			36.2						
Intersection LOS	**TWSC**								
95th Percentile Queue (veh)			0.7						

Synchro Results Summary Sheet

2: Coors & Sequoia

2034_Conditions

Sequoia Rd.

Coors Blvd.

Signalized

Coors Blvd. / Sequoia Rd. 2034_Conditions	EB (Sequoia Rd.)			WB (Sequoia Rd.)			NB (Coors Blvd.)			SB (Coors Blvd.)		
	L	T	R	L	T	R	L	T	R	L	T	R
Existing Lane Geometry	1	1	1	1	1	1	1	3	1	1	3	1
AM Peak Hour												
2034 NO BUILD Volumes	68	32	252	80	40	40	68	2,268	32	40	3,224	12
V/C Ratio	0.26	0.10	0.81	0.30	0.12	0.13	0.67	0.63	0.03	0.26	0.91	0.01
Level-of-Service	E	D	E	E	D	D	D	B	A	B	C	A
Control Delay (Seconds)	56.7	52.1	68.1	56.8	52.4	50.6	48.1	12.1	6.4	12.6	22.3	6.6
Intersection LOS	**C - 21.9**											
Queue Storage Ratio	1.2	0.0	0.0	0.9	0.0	0.2	0.7	0.0	0.1	0.2	0.0	0.0
Length of Queue (ft)	108.2			127.8		59.0	90.5		13.4	17.5		5.1
Existing Lane Capacity (ft)	90.0			145.0		245.0	125.0		200.0	115.0		280.0
Additional Queue Length Required (ft)	18.2			0.0		0.0	0.0		0.0	0.0		0.0
2034 BUILD Volumes	72	36	256	80	44	40	76	2,268	32	40	3,228	12
V/C Ratio	0.28	0.11	0.81	0.30	0.13	0.13	0.73	0.63	0.03	0.26	0.91	0.01
Level-of-Service	E	D	E	E	D	D	D	B	A	B	C	A
Control Delay (Seconds)	56.9	52.0	67.5	56.8	52.3	50.3	50.4	12.3	6.5	12.7	23.2	6.8
Intersection LOS	**C - 23.7**											
Queue Storage Ratio	1.3	0.0	0.0	0.9	0.0	0.2	0.8	0.0	0.1	0.2	0.0	0.0
Length of Queue (ft)	114.9			127.9		58.8	102.5		13.5	17.5		5.2
Existing Lane Capacity (ft)	90.0			145.0		245.0	125.0		200.0	115.0		280.0
Additional Queue Length Required (ft)	24.9			0.0		0.0	0.0		0.0	0.0		0.0

PM Peak Hour												
2034 NO BUILD Volumes	176	164	160	124	104	72	200	2,940	156	96	2,316	32
V/C Ratio	0.91	0.54	0.45	0.84	0.34	0.24	0.89	0.82	0.14	0.76	0.68	0.03
Level-of-Service	F	E	D	F	E	D	E	B	A	D	B	A
Control Delay (Seconds)	108.3	59.5	50.7	102.9	56.3	51.5	61.6	17.3	7.3	50.5	15.6	8.1
Intersection LOS	**C - 25.2**											
Queue Storage Ratio	4.0	0.0	0.0	1.8	0.0	0.4	2.8	0.0	0.4	1.2	0.0	0.1
Length of Queue (ft)	356.1			261.8		108.4	353.9		71.6	133.1		15.7
Existing Lane Capacity (ft)	90.0			145.0		245.0	125.0		200.0	115.0		280.0
Additional Queue Length Required (ft)	266.1			116.8		0.0	228.9		0.0	18.1		0.0
2034 BUILD Volumes	184	168	172	124	108	72	216	2,940	156	96	2,320	32
V/C Ratio	0.97	0.55	0.46	0.86	0.36	0.24	0.90	0.82	0.14	0.76	0.69	0.03
Level-of-Service	F	E	D	F	E	D	E	B	A	D	B	A
Control Delay (Seconds)	123.9	59.9	49.8	107.2	56.5	51.5	67.8	17.4	7.3	49.5	16.7	8.6
Intersection LOS	**C - 26.6**											
Queue Storage Ratio	4.3	0.0	0.0	1.8	0.0	0.4	3.1	0.0	0.4	1.1	0.0	0.1
Length of Queue (ft)	390.8			266.3		108.3	383.8		71.6	130.6		16.3
Existing Lane Capacity (ft)	90.0			145.0		245.0	125.0		200.0	115.0		280.0
Additional Queue Length Required (ft)	300.8			121.3		0.0	258.8		0.0	15.6		0.0

Synchro Results Summary Sheet

3: Sequoia & Driveway B

2034_Conditions

Driveway "B"

Coors Blvd.

Unsignalized

Coors Blvd. / Driveway "B" 2034_Conditions	EB (Driveway "B")			WB (Driveway "B")			SB (Coors Blvd.)		
	L	T	R	L	T	R	L	T	R
Existing Lane Geometry	0	<2			2>	0	1>		0
AM Peak Hour									
2034 NO BUILD Volumes	9	426			151	13	9		0
V/C Ratio	0.01						0.02		
Level-of-Service	A	A					B		
Control Delay (Seconds)	7.6	0.0					11.3		
Intersection LOS	**TWSC**								
95th Percentile Queue (veh)	0.0						0.0		
2034 BUILD Volumes	11	426			151	18	13		1
V/C Ratio	0.01						0.02		
Level-of-Service	A	A					B		
Control Delay (Seconds)	7.6	0.0					11.3		
Intersection LOS	**TWSC**								
95th Percentile Queue (veh)	0.0						0.1		

PM Peak Hour									
2034 NO BUILD Volumes	22	440			342	25	17		24
V/C Ratio	0.02						0.07		
Level-of-Service	A	A					B		
Control Delay (Seconds)	8.1	0.1					11.7		
Intersection LOS	**TWSC**								
95th Percentile Queue (veh)	0.1						0.2		
2034 BUILD Volumes	30	440			342	25	17		24
V/C Ratio	0.03						0.07		
Level-of-Service	A	A					B		
Control Delay (Seconds)	8.1	0.1					11.8		
Intersection LOS	**TWSC**								
95th Percentile Queue (veh)	0.1						0.2		

Intersection	
Int Delay, s/veh	0.1

Movement	EBL	EBR	NBL	NBT	SBT	SBR
Lane Configurations		↱		↑↑↑	↑↑↑	↱
Traffic Vol, veh/h	0	9	0	2373	3276	9
Future Vol, veh/h	0	9	0	2373	3276	9
Conflicting Peds, #/hr	0	0	0	0	0	0
Sign Control	Stop	Stop	Free	Free	Free	Free
RT Channelized	-	None	-	None	-	None
Storage Length	-	-	-	-	-	120
Veh in Median Storage, #	0	-	-	0	0	-
Grade, %	0	-	-	0	0	-
Peak Hour Factor	100	100	100	100	100	100
Heavy Vehicles, %	3	3	3	3	3	3
Mvmt Flow	0	9	0	2373	3276	9

Major/Minor	Minor2		Major1		Major2	
Conflicting Flow All	-	1638	-	0	-	0
Stage 1	-	-	-	-	-	-
Stage 2	-	-	-	-	-	-
Critical Hdwy	-	7.16	-	-	-	-
Critical Hdwy Stg 1	-	-	-	-	-	-
Critical Hdwy Stg 2	-	-	-	-	-	-
Follow-up Hdwy	-	3.93	-	-	-	-
Pot Cap-1 Maneuver	0	76	0	-	-	-
Stage 1	0	-	0	-	-	-
Stage 2	0	-	0	-	-	-
Platoon blocked, %				-	-	-
Mov Cap-1 Maneuver	-	76	-	-	-	-
Mov Cap-2 Maneuver	-	-	-	-	-	-
Stage 1	-	-	-	-	-	-
Stage 2	-	-	-	-	-	-

Approach	EB	NB	SB
HCM Control Delay, s	58.6	0	0
HCM LOS	F		

Minor Lane/Major Mvmt	NBT	EBLn1	SBT	SBR
Capacity (veh/h)	-	76	-	-
HCM Lane V/C Ratio	-	0.118	-	-
HCM Control Delay (s)	-	58.6	-	-
HCM Lane LOS	-	F	-	-
HCM 95th %tile Q(veh)	-	0.4	-	-

Intersection	
Int Delay, s/veh	0.1

Movement	EBL	EBR	NBL	NBT	SBT	SBR
Lane Configurations		↱		↑↑↑	↑↑↑	↱
Traffic Vol, veh/h	0	10	0	2375	3276	12
Future Vol, veh/h	0	10	0	2375	3276	12
Conflicting Peds, #/hr	0	0	0	0	0	0
Sign Control	Stop	Stop	Free	Free	Free	Free
RT Channelized	-	None	-	None	-	None
Storage Length	-	-	-	-	-	120
Veh in Median Storage, #	0	-	-	0	0	-
Grade, %	0	-	-	0	0	-
Peak Hour Factor	100	100	100	100	100	100
Heavy Vehicles, %	3	3	3	3	3	3
Mvmt Flow	0	10	0	2375	3276	12

Major/Minor	Minor2		Major1		Major2	
Conflicting Flow All	-	1638	-	0	-	0
Stage 1	-	-	-	-	-	-
Stage 2	-	-	-	-	-	-
Critical Hdwy	-	7.16	-	-	-	-
Critical Hdwy Stg 1	-	-	-	-	-	-
Critical Hdwy Stg 2	-	-	-	-	-	-
Follow-up Hdwy	-	3.93	-	-	-	-
Pot Cap-1 Maneuver	0	76	0	-	-	-
Stage 1	0	-	0	-	-	-
Stage 2	0	-	0	-	-	-
Platoon blocked, %				-	-	-
Mov Cap-1 Maneuver	-	76	-	-	-	-
Mov Cap-2 Maneuver	-	-	-	-	-	-
Stage 1	-	-	-	-	-	-
Stage 2	-	-	-	-	-	-

Approach	EB	NB	SB
HCM Control Delay, s	59.4	0	0
HCM LOS	F		

Minor Lane/Major Mvmt	NBT	EBLn1	SBT	SBR
Capacity (veh/h)	-	76	-	-
HCM Lane V/C Ratio	-	0.132	-	-
HCM Control Delay (s)	-	59.4	-	-
HCM Lane LOS	-	F	-	-
HCM 95th %tile Q(veh)	-	0.4	-	-

Intersection	
Int Delay, s/veh	0.2

Movement	EBL	EBR	NBL	NBT	SBT	SBR
Lane Configurations		↱		↑↑↑	↑↑↑	↱
Traffic Vol, veh/h	0	27	0	3201	2455	27
Future Vol, veh/h	0	27	0	3201	2455	27
Conflicting Peds, #/hr	0	0	0	0	0	0
Sign Control	Stop	Stop	Free	Free	Free	Free
RT Channelized	-	None	-	None	-	None
Storage Length	-	-	-	-	-	120
Veh in Median Storage, #	0	-	-	0	0	-
Grade, %	0	-	-	0	0	-
Peak Hour Factor	100	100	100	100	100	100
Heavy Vehicles, %	3	3	3	3	3	3
Mvmt Flow	0	27	0	3201	2455	27

Major/Minor	Minor2		Major1		Major2	
Conflicting Flow All	-	1228	-	0	-	0
Stage 1	-	-	-	-	-	-
Stage 2	-	-	-	-	-	-
Critical Hdwy	-	7.16	-	-	-	-
Critical Hdwy Stg 1	-	-	-	-	-	-
Critical Hdwy Stg 2	-	-	-	-	-	-
Follow-up Hdwy	-	3.93	-	-	-	-
Pot Cap-1 Maneuver	0	145	0	-	-	-
Stage 1	0	-	0	-	-	-
Stage 2	0	-	0	-	-	-
Platoon blocked, %				-	-	-
Mov Cap-1 Maneuver	-	145	-	-	-	-
Mov Cap-2 Maneuver	-	-	-	-	-	-
Stage 1	-	-	-	-	-	-
Stage 2	-	-	-	-	-	-

Approach	EB	NB	SB
HCM Control Delay, s	35.4	0	0
HCM LOS	E		

Minor Lane/Major Mvmt	NBT	EBLn1	SBT	SBR
Capacity (veh/h)	-	145	-	-
HCM Lane V/C Ratio	-	0.186	-	-
HCM Control Delay (s)	-	35.4	-	-
HCM Lane LOS	-	E	-	-
HCM 95th %tile Q(veh)	-	0.7	-	-

Intersection	
Int Delay, s/veh	0.2

Movement	EBL	EBR	NBL	NBT	SBT	SBR
Lane Configurations		↱		↑↑↑	↑↑↑	↱
Traffic Vol, veh/h	0	30	0	3208	2455	36
Future Vol, veh/h	0	30	0	3208	2455	36
Conflicting Peds, #/hr	0	0	0	0	0	0
Sign Control	Stop	Stop	Free	Free	Free	Free
RT Channelized	-	None	-	None	-	None
Storage Length	-	-	-	-	-	120
Veh in Median Storage, #	0	-	-	0	0	-
Grade, %	0	-	-	0	0	-
Peak Hour Factor	100	100	100	100	100	100
Heavy Vehicles, %	3	3	3	3	3	3
Mvmt Flow	0	30	0	3208	2455	36

Major/Minor	Minor2		Major1		Major2	
Conflicting Flow All	-	1228	-	0	-	0
Stage 1	-	-	-	-	-	-
Stage 2	-	-	-	-	-	-
Critical Hdwy	-	7.16	-	-	-	-
Critical Hdwy Stg 1	-	-	-	-	-	-
Critical Hdwy Stg 2	-	-	-	-	-	-
Follow-up Hdwy	-	3.93	-	-	-	-
Pot Cap-1 Maneuver	0	145	0	-	-	-
Stage 1	0	-	0	-	-	-
Stage 2	0	-	0	-	-	-
Platoon blocked, %				-	-	-
Mov Cap-1 Maneuver	-	145	-	-	-	-
Mov Cap-2 Maneuver	-	-	-	-	-	-
Stage 1	-	-	-	-	-	-
Stage 2	-	-	-	-	-	-

Approach	EB	NB	SB
HCM Control Delay, s	36.2	0	0
HCM LOS	E		

Minor Lane/Major Mvmt	NBT	EBLn1	SBT	SBR
Capacity (veh/h)	-	145	-	-
HCM Lane V/C Ratio	-	0.207	-	-
HCM Control Delay (s)	-	36.2	-	-
HCM Lane LOS	-	E	-	-
HCM 95th %tile Q(veh)	-	0.7	-	-

Intersection	
Int Delay, s/veh	0.3

Movement	EBL	EBT	WBT	WBR	SBL	SBR
Lane Configurations						
Traffic Vol, veh/h	9	426	151	13	9	0
Future Vol, veh/h	9	426	151	13	9	0
Conflicting Peds, #/hr	0	0	0	0	0	0
Sign Control	Free	Free	Free	Free	Stop	Stop
RT Channelized	-	None	-	None	-	None
Storage Length	-	-	-	-	0	-
Veh in Median Storage, #	-	0	0	-	0	-
Grade, %	-	0	0	-	0	-
Peak Hour Factor	100	100	100	100	100	100
Heavy Vehicles, %	3	3	3	3	3	3
Mvmt Flow	9	426	151	13	9	0

Major/Minor	Major1		Major2		Minor2	
Conflicting Flow All	164	0	-	0	389	82
Stage 1	-	-	-	-	158	-
Stage 2	-	-	-	-	231	-
Critical Hdwy	4.16	-	-	-	6.86	6.96
Critical Hdwy Stg 1	-	-	-	-	5.86	-
Critical Hdwy Stg 2	-	-	-	-	5.86	-
Follow-up Hdwy	2.23	-	-	-	3.53	3.33
Pot Cap-1 Maneuver	1405	-	-	-	585	958
Stage 1	-	-	-	-	851	-
Stage 2	-	-	-	-	782	-
Platoon blocked, %		-	-	-		
Mov Cap-1 Maneuver	1405	-	-	-	580	958
Mov Cap-2 Maneuver	-	-	-	-	580	-
Stage 1	-	-	-	-	844	-
Stage 2	-	-	-	-	782	-

Approach	EB	WB	SB
HCM Control Delay, s	0.2	0	11.3
HCM LOS			B

Minor Lane/Major Mvmt	EBL	EBT	WBT	WBR	SBLn1
Capacity (veh/h)	1405	-	-	-	580
HCM Lane V/C Ratio	0.006	-	-	-	0.016
HCM Control Delay (s)	7.6	0	-	-	11.3
HCM Lane LOS	A	A	-	-	B
HCM 95th %tile Q(veh)	0	-	-	-	0

Intersection	
Int Delay, s/veh	0.4

Movement	EBL	EBT	WBT	WBR	SBL	SBR
Lane Configurations						
Traffic Vol, veh/h	11	426	151	18	13	1
Future Vol, veh/h	11	426	151	18	13	1
Conflicting Peds, #/hr	0	0	0	0	0	0
Sign Control	Free	Free	Free	Free	Stop	Stop
RT Channelized	-	None	-	None	-	None
Storage Length	-	-	-	-	0	-
Veh in Median Storage, #	-	0	0	-	0	-
Grade, %	-	0	0	-	0	-
Peak Hour Factor	100	100	100	100	100	100
Heavy Vehicles, %	3	3	3	3	3	3
Mvmt Flow	11	426	151	18	13	1

Major/Minor	Major1		Major2		Minor2	
Conflicting Flow All	169	0	-	0	395	85
Stage 1	-	-	-	-	160	-
Stage 2	-	-	-	-	235	-
Critical Hdwy	4.16	-	-	-	6.86	6.96
Critical Hdwy Stg 1	-	-	-	-	5.86	-
Critical Hdwy Stg 2	-	-	-	-	5.86	-
Follow-up Hdwy	2.23	-	-	-	3.53	3.33
Pot Cap-1 Maneuver	1399	-	-	-	579	954
Stage 1	-	-	-	-	849	-
Stage 2	-	-	-	-	779	-
Platoon blocked, %		-	-	-		
Mov Cap-1 Maneuver	1399	-	-	-	573	954
Mov Cap-2 Maneuver	-	-	-	-	573	-
Stage 1	-	-	-	-	841	-
Stage 2	-	-	-	-	779	-

Approach	EB	WB	SB
HCM Control Delay, s	0.2	0	11.3
HCM LOS			B

Minor Lane/Major Mvmt	EBL	EBT	WBT	WBR	SBLn1
Capacity (veh/h)	1399	-	-	-	590
HCM Lane V/C Ratio	0.008	-	-	-	0.024
HCM Control Delay (s)	7.6	0	-	-	11.3
HCM Lane LOS	A	A	-	-	B
HCM 95th %tile Q(veh)	0	-	-	-	0.1

Intersection	
Int Delay, s/veh	0.8

Movement	EBL	EBT	WBT	WBR	SBL	SBR
Lane Configurations						
Traffic Vol, veh/h	22	440	342	25	17	24
Future Vol, veh/h	22	440	342	25	17	24
Conflicting Peds, #/hr	0	0	0	0	0	0
Sign Control	Free	Free	Free	Free	Stop	Stop
RT Channelized	-	None	-	None	-	None
Storage Length	-	-	-	-	0	-
Veh in Median Storage, #	-	0	0	-	0	-
Grade, %	-	0	0	-	0	-
Peak Hour Factor	100	100	100	100	100	100
Heavy Vehicles, %	3	3	3	3	3	3
Mvmt Flow	22	440	342	25	17	24

Major/Minor	Major1		Major2		Minor2	
Conflicting Flow All	367	0	-	0	619	184
Stage 1	-	-	-	-	355	-
Stage 2	-	-	-	-	264	-
Critical Hdwy	4.16	-	-	-	6.86	6.96
Critical Hdwy Stg 1	-	-	-	-	5.86	-
Critical Hdwy Stg 2	-	-	-	-	5.86	-
Follow-up Hdwy	2.23	-	-	-	3.53	3.33
Pot Cap-1 Maneuver	1181	-	-	-	418	824
Stage 1	-	-	-	-	678	-
Stage 2	-	-	-	-	753	-
Platoon blocked, %		-	-	-		
Mov Cap-1 Maneuver	1181	-	-	-	408	824
Mov Cap-2 Maneuver	-	-	-	-	408	-
Stage 1	-	-	-	-	661	-
Stage 2	-	-	-	-	753	-

Approach	EB	WB	SB
HCM Control Delay, s	0.5	0	11.7
HCM LOS			B

Minor Lane/Major Mvmt	EBL	EBT	WBT	WBR	SBLn1
Capacity (veh/h)	1181	-	-	-	579
HCM Lane V/C Ratio	0.019	-	-	-	0.071
HCM Control Delay (s)	8.1	0.1	-	-	11.7
HCM Lane LOS	A	A	-	-	B
HCM 95th %tile Q(veh)	0.1	-	-	-	0.2

Intersection	
Int Delay, s/veh	0.9

Movement	EBL	EBT	WBT	WBR	SBL	SBR
Lane Configurations						
Traffic Vol, veh/h	30	440	342	25	17	24
Future Vol, veh/h	30	440	342	25	17	24
Conflicting Peds, #/hr	0	0	0	0	0	0
Sign Control	Free	Free	Free	Free	Stop	Stop
RT Channelized	-	None	-	None	-	None
Storage Length	-	-	-	-	0	-
Veh in Median Storage, #	-	0	0	-	0	-
Grade, %	-	0	0	-	0	-
Peak Hour Factor	100	100	100	100	100	100
Heavy Vehicles, %	3	3	3	3	3	3
Mvmt Flow	30	440	342	25	17	24

Major/Minor	Major1		Major2		Minor2	
Conflicting Flow All	367	0	-	0	635	184
Stage 1	-	-	-	-	355	-
Stage 2	-	-	-	-	280	-
Critical Hdwy	4.16	-	-	-	6.86	6.96
Critical Hdwy Stg 1	-	-	-	-	5.86	-
Critical Hdwy Stg 2	-	-	-	-	5.86	-
Follow-up Hdwy	2.23	-	-	-	3.53	3.33
Pot Cap-1 Maneuver	1181	-	-	-	409	824
Stage 1	-	-	-	-	678	-
Stage 2	-	-	-	-	739	-
Platoon blocked, %		-	-	-		
Mov Cap-1 Maneuver	1181	-	-	-	395	824
Mov Cap-2 Maneuver	-	-	-	-	395	-
Stage 1	-	-	-	-	655	-
Stage 2	-	-	-	-	739	-

Approach	EB	WB	SB
HCM Control Delay, s	0.6	0	11.8
HCM LOS			B

Minor Lane/Major Mvmt	EBL	EBT	WBT	WBR	SBLn1
Capacity (veh/h)	1181	-	-	-	568
HCM Lane V/C Ratio	0.025	-	-	-	0.072
HCM Control Delay (s)	8.1	0.1	-	-	11.8
HCM Lane LOS	A	A	-	-	B
HCM 95th %tile Q(veh)	0.1	-	-	-	0.2

HCS Signalized Intersection Results Summary

General Information				Intersection Information	
Agency				Duration, h	0.250
Analyst		Analysis Date		Area Type	Other
Jurisdiction		Time Period		PHF	1.00
Urban Street	Coors	Analysis Year		Analysis Period	1> 7:00
Intersection	Sequoia	File Name	2034_ANX_Exp.xus		
Project Description					

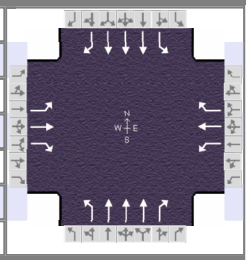

Demand Information	EB			WB			NB			SB		
Approach Movement	L	T	R	L	T	R	L	T	R	L	T	R
Demand (v), veh/h	68	32	252	80	40	40	68	2268	32	40	3224	12

Signal Information			
Cycle, s	150.0	Reference Phase	2
Offset, s	86	Reference Point	Begin
Uncoordinated	No	Simult. Gap E/W	On
Force Mode	Fixed	Simult. Gap N/S	On

Green	2.5	1.1	105.8	26.2	0.0	0.0
Yellow	3.0	0.0	4.5	3.5	0.0	0.0
Red	0.5	0.0	1.0	2.0	0.0	0.0

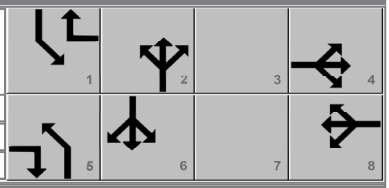

Timer Results	EBL	EBT	WBL	WBT	NBL	NBT	SBL	SBT
Assigned Phase		4		8	5	2	1	6
Case Number		5.0		5.0	1.1	3.0	1.1	3.0
Phase Duration, s		31.7		31.7	7.0	112.4	6.0	111.3
Change Period, ($Y+R_c$), s		5.5		5.5	3.5	5.5	3.5	5.5
Max Allow Headway (MAH), s		4.3		4.3	4.0	0.0	4.0	0.0
Queue Clearance Time (g_s), s		25.0		12.0	3.6		3.0	
Green Extension Time (g_e), s		1.2		1.9	0.1	0.0	0.1	0.0
Phase Call Probability		1.00		1.00	0.94		0.81	
Max Out Probability		0.38		0.00	0.00		0.00	

Movement Group Results	EB			WB			NB			SB		
Approach Movement	L	T	R	L	T	R	L	T	R	L	T	R
Assigned Movement	7	4	14	3	8	18	5	2	12	1	6	16
Adjusted Flow Rate (v), veh/h	68	32	252	80	40	40	68	2268	32	40	3224	12
Adjusted Saturation Flow Rate (s), veh/h/ln	1356	1856	1572	1366	1856	1572	1767	1685	1572	1767	1685	1572
Queue Service Time (g_s), s	6.7	2.2	23.0	7.8	2.7	3.2	1.6	35.1	0.9	1.0	77.9	0.3
Cycle Queue Clearance Time (g_c), s	9.4	2.2	23.0	10.0	2.7	3.2	1.6	35.1	0.9	1.0	77.9	0.3
Green Ratio (g/C)	0.17	0.17	0.20	0.17	0.17	0.19	0.73	0.71	0.71	0.72	0.71	0.71
Capacity (c), veh/h	260	324	312	267	324	300	101	3601	1120	153	3564	1109
Volume-to-Capacity Ratio (X)	0.261	0.099	0.809	0.300	0.123	0.133	0.671	0.630	0.029	0.261	0.905	0.011
Back of Queue (Q), ft/ln (95 th percentile)	108.2	47.8	391.4	127.8	60.1	59	90.5	448	13.4	17.5	920.5	5.1
Back of Queue (Q), veh/ln (95 th percentile)	4.2	1.9	15.3	5.0	2.3	2.3	3.5	17.5	0.5	0.7	36.0	0.2
Queue Storage Ratio (RQ) (95 th percentile)	1.20	0.00	0.00	0.88	0.00	0.24	0.72	0.00	0.07	0.15	0.00	0.02
Uniform Delay (d_1), s/veh	56.2	52.0	57.4	56.2	52.2	50.4	40.6	11.3	6.3	11.7	18.0	6.6
Incremental Delay (d_2), s/veh	0.5	0.1	10.7	0.6	0.2	0.2	7.5	0.8	0.0	0.9	4.3	0.0
Initial Queue Delay (d_3), s/veh	0.0	0.0	0.0	0.0	0.0	0.0	0.0	0.0	0.0	0.0	0.0	0.0
Control Delay (d), s/veh	56.7	52.1	68.1	56.8	52.4	50.6	48.1	12.1	6.4	12.6	22.3	6.6
Level of Service (LOS)	E	D	E	E	D	D	D	B	A	B	C	A
Approach Delay, s/veh / LOS	64.5	E		54.2	D		13.1	B		22.2	C	
Intersection Delay, s/veh / LOS	21.9						C					

Multimodal Results	EB		WB		NB		SB	
Pedestrian LOS Score / LOS								
Bicycle LOS Score / LOS								

Copyright © 2023 University of Florida, All Rights Reserved.

HCS Signalized Intersection Results Summary

General Information				Intersection Information	
Agency				Duration, h	0.250
Analyst		Analysis Date		Area Type	Other
Jurisdiction		Time Period		PHF	1.00
Urban Street	Coors	Analysis Year		Analysis Period	1> 7:00
Intersection	Sequoia	File Name	2034_ABX_Exp.xus		
Project Description					

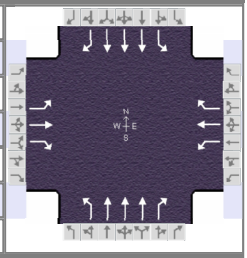

Demand Information	EB			WB			NB			SB		
Approach Movement	L	T	R	L	T	R	L	T	R	L	T	R
Demand (*v*), veh/h	72	36	256	80	44	40	76	2268	32	40	3228	12

Signal Information			
Cycle, s	150.0	Reference Phase	2
Offset, s	86	Reference Point	Begin
Uncoordinated	No	Simult. Gap E/W	On
Force Mode	Fixed	Simult. Gap N/S	On

Green	2.5	1.4	105.2	26.5	0.0	0.0
Yellow	3.0	0.0	4.5	3.5	0.0	0.0
Red	0.5	0.0	1.0	2.0	0.0	0.0

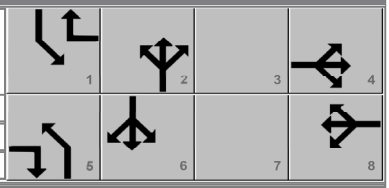

Timer Results	EBL	EBT	WBL	WBT	NBL	NBT	SBL	SBT
Assigned Phase		4		8	5	2	1	6
Case Number		5.0		5.0	1.1	3.0	1.1	3.0
Phase Duration, s		32.0		32.0	7.3	112.0	6.0	110.7
Change Period, ($Y+R_c$), s		5.5		5.5	3.5	5.5	3.5	5.5
Max Allow Headway (*MAH*), s		4.3		4.3	4.0	0.0	4.0	0.0
Queue Clearance Time (g_s), s		25.3		12.3	3.8		3.0	
Green Extension Time (g_e), s		1.2		2.0	0.1	0.0	0.1	0.0
Phase Call Probability		1.00		1.00	0.96		0.81	
Max Out Probability		0.43		0.00	0.00		0.00	

Movement Group Results	EB			WB			NB			SB		
Approach Movement	L	T	R	L	T	R	L	T	R	L	T	R
Assigned Movement	7	4	14	3	8	18	5	2	12	1	6	16
Adjusted Flow Rate (*v*), veh/h	72	36	256	80	44	40	76	2268	32	40	3228	12
Adjusted Saturation Flow Rate (*s*), veh/h/ln	1351	1856	1572	1361	1856	1572	1767	1685	1572	1767	1685	1572
Queue Service Time (g_s), s	7.1	2.4	23.3	7.9	3.0	3.2	1.8	35.4	0.9	1.0	79.2	0.3
Cycle Queue Clearance Time (g_c), s	10.1	2.4	23.3	10.3	3.0	3.2	1.8	35.4	0.9	1.0	79.2	0.3
Green Ratio (*g/C*)	0.18	0.18	0.20	0.18	0.18	0.19	0.73	0.71	0.71	0.72	0.70	0.70
Capacity (*c*), veh/h	260	328	318	266	328	304	104	3590	1117	153	3544	1102
Volume-to-Capacity Ratio (*X*)	0.277	0.110	0.805	0.300	0.134	0.132	0.732	0.632	0.029	0.262	0.911	0.011
Back of Queue (*Q*), ft/ln (95 th percentile)	114.9	53.7	395.3	127.9	66	58.8	102.5	451.4	13.5	17.5	941	5.2
Back of Queue (*Q*), veh/ln (95 th percentile)	4.5	2.1	15.4	5.0	2.6	2.3	4.0	17.6	0.5	0.7	36.8	0.2
Queue Storage Ratio (*RQ*) (95 th percentile)	1.28	0.00	0.00	0.88	0.00	0.24	0.82	0.00	0.07	0.15	0.00	0.02
Uniform Delay (d_1), s/veh	56.3	51.8	57.0	56.2	52.1	50.1	40.9	11.4	6.4	11.8	18.5	6.8
Incremental Delay (d_2), s/veh	0.6	0.1	10.5	0.6	0.2	0.2	9.5	0.9	0.0	0.9	4.7	0.0
Initial Queue Delay (d_3), s/veh	0.0	0.0	0.0	0.0	0.0	0.0	0.0	0.0	0.0	0.0	0.0	0.0
Control Delay (*d*), s/veh	56.9	52.0	67.5	56.8	52.3	50.3	50.4	12.3	6.5	12.7	23.2	6.8
Level of Service (LOS)	E	D	E	E	D	D	D	B	A	B	C	A
Approach Delay, s/veh / LOS	63.9	E		54.0	D		13.4	B		23.0	C	
Intersection Delay, s/veh / LOS	22.6						C					

Multimodal Results	EB		WB		NB		SB	
Pedestrian LOS Score / LOS								
Bicycle LOS Score / LOS								

Copyright © 2023 University of Florida, All Rights Reserved.

HCS Signalized Intersection Results Summary

General Information				Intersection Information	
Agency				Duration, h	0.250
Analyst		Analysis Date		Area Type	Other
Jurisdiction		Time Period		PHF	1.00
Urban Street	Coors	Analysis Year		Analysis Period	1> 7:00
Intersection	Sequoia	File Name	2034_PNX_Exp.xus		
Project Description					

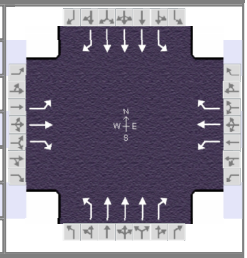

Demand Information	EB			WB			NB			SB		
Approach Movement	L	T	R	L	T	R	L	T	R	L	T	R
Demand (*v*), veh/h	176	164	160	124	104	72	200	2940	156	96	2316	32

Signal Information			
Cycle, s	150.0	Reference Phase	2
Offset, s	58	Reference Point	Begin
Uncoordinated	No	Simult. Gap E/W	On
Force Mode	Fixed	Simult. Gap N/S	On

Green	4.5	1.6	101.4	24.5	0.0	0.0
Yellow	3.0	3.0	4.5	3.5	0.0	0.0
Red	0.5	0.5	1.0	2.0	0.0	0.0

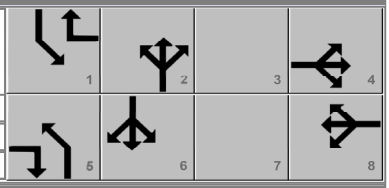

Timer Results	EBL	EBT	WBL	WBT	NBL	NBT	SBL	SBT
Assigned Phase		4		8	5	2	1	6
Case Number		5.0		5.0	1.1	3.0	1.1	3.0
Phase Duration, s		30.0		30.0	13.1	112.0	8.0	106.9
Change Period, ($Y+R_c$), s		5.5		5.5	3.5	5.5	3.5	5.5
Max Allow Headway (*MAH*), s		4.3		4.3	4.0	0.0	4.0	0.0
Queue Clearance Time (g_s), s		26.5		26.5	9.3		4.5	
Green Extension Time (g_e), s		0.0		0.0	0.3	0.0	0.1	0.0
Phase Call Probability		1.00		1.00	1.00		0.98	
Max Out Probability		1.00		1.00	0.43		1.00	

Movement Group Results	EB			WB			NB			SB		
Approach Movement	L	T	R	L	T	R	L	T	R	L	T	R
Assigned Movement	7	4	14	3	8	18	5	2	12	1	6	16
Adjusted Flow Rate (*v*), veh/h	176	164	160	124	104	72	200	2940	156	96	2316	32
Adjusted Saturation Flow Rate (*s*), veh/h/ln	1280	1856	1572	1212	1856	1572	1767	1685	1572	1767	1685	1572
Queue Service Time (g_s), s	17.0	12.2	13.1	12.3	7.5	5.8	7.3	60.5	4.8	2.5	41.1	1.0
Cycle Queue Clearance Time (g_c), s	24.5	12.2	13.1	24.5	7.5	5.8	7.3	60.5	4.8	2.5	41.1	1.0
Green Ratio (*g/C*)	0.16	0.16	0.23	0.16	0.16	0.19	0.75	0.71	0.71	0.71	0.68	0.68
Capacity (*c*), veh/h	193	303	357	148	303	304	224	3589	1116	126	3418	1063
Volume-to-Capacity Ratio (*X*)	0.910	0.541	0.448	0.840	0.343	0.237	0.894	0.819	0.140	0.764	0.678	0.030
Back of Queue (*Q*), ft/ln (95 th percentile)	356.1	253.5	232.5	261.8	164.9	108.4	353.9	722.3	71.6	133.1	531.1	15.7
Back of Queue (*Q*), veh/ln (95 th percentile)	13.9	9.9	9.1	10.2	6.4	4.2	13.8	28.2	2.8	5.2	20.7	0.6
Queue Storage Ratio (*RQ*) (95 th percentile)	3.96	0.00	0.00	1.81	0.00	0.44	2.83	0.00	0.36	1.16	0.00	0.06
Uniform Delay (d_1), s/veh	68.0	57.6	49.9	70.0	55.6	51.1	37.1	15.1	7.0	35.5	14.5	8.0
Incremental Delay (d_2), s/veh	40.4	1.9	0.9	32.9	0.7	0.4	24.4	2.2	0.3	15.0	1.1	0.1
Initial Queue Delay (d_3), s/veh	0.0	0.0	0.0	0.0	0.0	0.0	0.0	0.0	0.0	0.0	0.0	0.0
Control Delay (*d*), s/veh	108.3	59.5	50.7	102.9	56.3	51.5	61.6	17.3	7.3	50.5	15.6	8.1
Level of Service (LOS)	F	E	D	F	E	D	E	B	A	D	B	A
Approach Delay, s/veh / LOS	73.9	E		74.4	E		19.5	B		16.9	B	
Intersection Delay, s/veh / LOS	25.2						C					

Multimodal Results	EB		WB		NB		SB	
Pedestrian LOS Score / LOS								
Bicycle LOS Score / LOS								

Copyright © 2023 University of Florida, All Rights Reserved.

HCS Signalized Intersection Results Summary

General Information				Intersection Information	
Agency				Duration, h	0.250
Analyst		Analysis Date		Area Type	Other
Jurisdiction		Time Period		PHF	1.00
Urban Street	Coors	Analysis Year		Analysis Period	1> 7:00
Intersection	Sequoia	File Name	2034_PBX_Exp.xus		
Project Description					

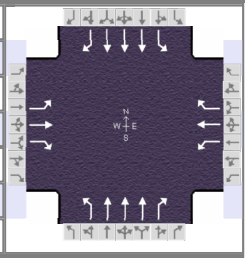

Demand Information	EB			WB			NB			SB		
Approach Movement	L	T	R	L	T	R	L	T	R	L	T	R
Demand (*v*), veh/h	184	168	172	124	108	72	216	2940	156	96	2320	32

Signal Information												
Cycle, s	150.0	Reference Phase	2									
Offset, s	58	Reference Point	Begin	Green	4.6	3.1	99.8	24.5	0.0	0.0		
Uncoordinated	No	Simult. Gap E/W	On	Yellow	3.0	3.0	4.5	3.5	0.0	0.0		
Force Mode	Fixed	Simult. Gap N/S	On	Red	0.5	0.5	1.0	2.0	0.0	0.0		

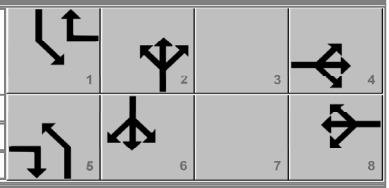

Timer Results	EBL	EBT	WBL	WBT	NBL	NBT	SBL	SBT
Assigned Phase		4		8	5	2	1	6
Case Number		5.0		5.0	1.1	3.0	1.1	3.0
Phase Duration, s		30.0		30.0	14.7	111.9	8.1	105.3
Change Period, ($Y+R_c$), s		5.5		5.5	3.5	5.5	3.5	5.5
Max Allow Headway (*MAH*), s		4.3		4.3	4.0	0.0	4.0	0.0
Queue Clearance Time (g_s), s		26.5		26.5	10.9		4.6	
Green Extension Time (g_e), s		0.0		0.0	0.2	0.0	0.1	0.0
Phase Call Probability		1.00		1.00	1.00		0.98	
Max Out Probability		1.00		1.00	1.00		1.00	

Movement Group Results	EB			WB			NB			SB		
Approach Movement	L	T	R	L	T	R	L	T	R	L	T	R
Assigned Movement	7	4	14	3	8	18	5	2	12	1	6	16
Adjusted Flow Rate (*v*), veh/h	184	168	172	124	108	72	216	2940	156	96	2320	32
Adjusted Saturation Flow Rate (*s*), veh/h/ln	1275	1856	1572	1208	1856	1572	1767	1685	1572	1767	1685	1572
Queue Service Time (g_s), s	16.7	12.5	14.0	12.0	7.8	5.8	8.9	60.6	4.8	2.6	42.6	1.0
Cycle Queue Clearance Time (g_c), s	24.5	12.5	14.0	24.5	7.8	5.8	8.9	60.6	4.8	2.6	42.6	1.0
Green Ratio (*g/C*)	0.16	0.16	0.24	0.16	0.16	0.19	0.75	0.71	0.71	0.70	0.67	0.67
Capacity (*c*), veh/h	190	303	374	145	303	305	239	3586	1116	126	3364	1047
Volume-to-Capacity Ratio (*X*)	0.967	0.554	0.460	0.857	0.356	0.236	0.904	0.820	0.140	0.759	0.690	0.031
Back of Queue (*Q*), ft/ln (95 th percentile)	390.8	259.5	244.9	266.3	171.7	108.3	383.8	722.4	71.6	130.6	552.5	16.3
Back of Queue (*Q*), veh/ln (95 th percentile)	15.3	10.1	9.6	10.4	6.7	4.2	15.0	28.2	2.8	5.1	21.6	0.6
Queue Storage Ratio (*RQ*) (95 th percentile)	4.34	0.00	0.00	1.84	0.00	0.44	3.07	0.00	0.36	1.14	0.00	0.06
Uniform Delay (d_1), s/veh	68.5	57.7	48.9	70.3	55.7	51.1	39.9	15.1	7.0	35.0	15.5	8.6
Incremental Delay (d_2), s/veh	55.4	2.2	0.9	36.8	0.7	0.4	27.9	2.2	0.3	14.6	1.2	0.1
Initial Queue Delay (d_3), s/veh	0.0	0.0	0.0	0.0	0.0	0.0	0.0	0.0	0.0	0.0	0.0	0.0
Control Delay (*d*), s/veh	123.9	59.9	49.8	107.2	56.5	51.5	67.8	17.4	7.3	49.5	16.7	8.6
Level of Service (LOS)	F	E	D	F	E	D	E	B	A	D	B	A
Approach Delay, s/veh / LOS	79.1	E		76.0	E		20.2	C		17.9	B	
Intersection Delay, s/veh / LOS	26.6						C					

Multimodal Results	EB		WB		NB		SB	
Pedestrian LOS Score / LOS								
Bicycle LOS Score / LOS								

Copyright © 2023 University of Florida, All Rights Reserved.

Arrowhead Development

Projected Turning Movements Worksheet

NM 528 / Driveway "A"

INTERSECTION: E-W Street: **Driveway "A"** (13)

N-S Street: **Coors Blvd.**

Year of Existing Counts 2023

Implementation Year 2024

Growth Rates	**1.00%**			**1.00%**			**1.00%**			**1.00%**		
	Eastbound (Driveway "A")			**Westbound (Driveway "A")**			**Northbound (Coors)**			**Southbound (Coors)**		
	Left	Thru	Right	Left	Thru	Right	Left	Thru	Right	Left	Thru	Right
Existing Volumes	0	0	8	0	0	0	0	1,820	0	0	2,716	8
Background Traffic Growth	0	0	0	0	0	0	0	18	0	0	27	0
Subtotal	0	0	8	0	0	0	0	1,838	0	0	2,743	8
Coors Pavilion Trips	0	0	0	0	0	0	0	0	0	0	0	0
South Coors Pavilion (Oxbow) Trips	0	0	0	0	0	0	0	0	0	0	0	0
Subtotal (NO BUILD - A.M.)	***0***	***0***	***8***	***0***	***0***	***0***	***0***	***2,190***	***0***	***0***	***3,007***	***8***
Percent Commercial Trips Generated(Entering)	*0.00%*	*0.00%*	*0.00%*	*0.00%*	*0.00%*	*0.00%*	*0.00%*	*0.00%*	*0.00%*	*0.00%*	*0.00%*	***28.43%***
Percent Commercial Trips Generated(Exiting)	*0.00%*	*0.00%*	***10.00%***	*0.00%*	*0.00%*	*0.00%*	*0.00%*	***28.43%***	*0.00%*	*0.00%*	*0.00%*	*0.00%*
Total Trips Generated	0	0	1	0	0	0	0	2	0	0	0	3
Subtotal AM Pk Hr. BUILD Volumes	**0**	**0**	**9**	**0**	**0**	**0**	**0**	**2,192**	**0**	**0**	**3,007**	**11**
Total AM Peak Hour BUILD Volumes	**0**	**0**	**9**	**0**	**0**	**0**	**0**	**2,192**	**0**	**0**	**3,007**	**11**

	1.00%			**1.00%**			**1.00%**			**1.00%**		
	Eastbound (Driveway "A")			**Westbound (Driveway "A")**			**Northbound (Coors)**			**Southbound (Coors)**		
	Left	Thru	Right	Left	Thru	Right	Left	Thru	Right	Left	Thru	Right
Existing Volumes	0	0	24	0	0	0	0	2,632	0	0	1,856	24
Background Traffic Growth	0	0	0	0	0	0	0	26	0	0	19	0
Subtotal	0	0	24	0	0	0	0	2,658	0	0	1,875	24
Coors Pavilion Trips	0	0	0	0	0	0	0	0	0	0	0	0
South Coors Pavilion (Oxbow) Trips	0	0	0	0	0	0	0	0	0	0	0	0
Subtotal (NO BUILD - P.M.)	***0***	***0***	***24***	***0***	***0***	***0***	***0***	***2,943***	***0***	***0***	***2,267***	***24***
Percent Commercial Trips Generated(Entering)	*0.00%*	*0.00%*	*0.00%*	*0.00%*	*0.00%*	*0.00%*	*0.00%*	*0.00%*	*0.00%*	*0.00%*	*0.00%*	***28.43%***
Percent Commercial Trips Generated(Exiting)	*0.00%*	*0.00%*	***10.00%***	*0.00%*	*0.00%*	*0.00%*	*0.00%*	***28.43%***	*0.00%*	*0.00%*	*0.00%*	*0.00%*
Total Trips Generated	0	0	3	0	0	0	0	7	0	0	0	9
Subtotal PM Pk Hr. BUILD Volumes	**0**	**0**	**27**	**0**	**0**	**0**	**0**	**2,950**	**0**	**0**	**2,267**	**33**
Total PM Peak Hour BUILD Volumes	**0**	**0**	**27**	**0**	**0**	**0**	**0**	**2,950**	**0**	**0**	**2,267**	**33**

Data Entry Sheet

Determination of Warrants for Deceleration Lanes

NM DOT State Access Management Manual Criteria

Driveway "A" / Coors Blvd.

Project Information:

Project Name:	Global Storage	
Project Location:	Coors Blvd. / Driveway "A"	
Implemenation Year:	2024	
Project Environment:	Urban	Multi-Lane

Street Information:

Major Street Name:	Coors Blvd.
Minor Street Name:	Driveway "A"

Intersection Information:

	Orientation	Prevailing Speed	No. Lanes Each Direction
Driveway "A"	Eastbound	25	N/A
Coors Blvd.	North-South	45	3

Determine Case:

Case
1 Urban Two-Lane Highway - Use Table 17.B.1
2 Urban Multi-Lane Highway - Use Table 17.B-2
3 Rural Two Lane Highway - Use Table 17.B-3 and 17.B-5
4 Rural Multi-Lane Highway - Use Table 17.B-4 and 17.B-6

Coors Blvd. is Case	2
Speed Category	45 to 55

SB Right Turn Volumes		SB Thru Volumes
2024 AM Pk. Hr. NO BUILD	8	3007
2024 AM Pk. Hr. BUILD	11	3007
2024 PM Pk. Hr. NO BUILD	24	2267
2024 PM Pk. Hr. BUILD	33	2267

NB Left Turn Volumes		NB Thru Volumes
2024 AM Pk. Hr. NO BUILD	0	2190
2024 AM Pk. Hr. BUILD	0	2192
2024 PM Pk. Hr. NO BUILD	0	2943
2024 PM Pk. Hr. BUILD	0	2950

Worksheet Developed by Terry O. Brown, P.E.

Determination of Warrants for Auxiliary Lanes

Project Name: **Global Storage**
Name of Highway: **Coors Blvd.**
Name of Cross Street: **Driveway "A"**

Determination of Warrants for: **Eastbound Driveway**

Implementation Year Volumes - **2024** **Posted Speed Limit:** **45**

Right Turn Deceleration Lane - Implementation Year Volumes

Condition	Year	Projected Right Turn Volume	Warrant Volume in thru Lane	Projected Volume in thru Lane	✓ if Met	Lane Length (Deceleration)*	Adjustment Factor for Grade**	Lane Length (Storage)***	Total Lane Length	Taper Ratio
AM Peak Hour NO BUILD	**2024**	8	372	1,002	✓	370	1.00	-	**370**	**12.5:1**
AM Peak Hour BUILD	**2024**	11	304	1,002	✓	370	1.00	-	**370**	**12.5:1**
PM Peak Hour NO BUILD	**2024**	24	156	756	✓	370	1.00	-	**370**	**12.5:1**
PM Peak Hour BUILD	**2024**	33	124	756	✓	370	1.00	-	**370**	**12.5:1**

Based on Table 17.B-2 (Criteria for Deceleration Lanes on Urban Multi-Lane Highways)

Left Turn Deceleration Lane - Implementation Year Volumes

Condition	Year	Projected Left Turn Volume	Warrant Volume in thru Lane	Projected Volume in thru Lane	✓ if Met	Lane Length (Deceleration)*	Adjustment Factor for Grade**	Lane Length (Storage)***	Total Lane Length	Taper Ratio
AM Peak Hour NO BUILD	**2024**	-	-	730		N/A		N/A	**N/A**	**N/A**
AM Peak Hour BUILD	**2024**	-	-	731		N/A		N/A	**N/A**	**N/A**
PM Peak Hour NO BUILD	**2024**	-	-	981		N/A		N/A	**N/A**	**N/A**
PM Peak Hour BUILD	**2024**	-	-	983		N/A		N/A	**N/A**	**N/A**

Based on Table 17.B-2 (Criteria for Deceleration Lanes on Urban Multi-Lane Highways)

* **Lane Length Requirements based on Table 18.K-1 (Deceleration and Acceleraion Lengths)**
** **Enter Grade Adjustment Factor from Table 18.K-2 or other criteria.**
*** **Lane Storage Length is Based on a calculated 3-minute queue based on average arrival rate per minute.**
= Volume/Hr. divided by 60 times three (rounded) times 25 feet per vehicle.
Lane Storage Length for right turn decel lanes is zero unless there is a stop condition.

Notes and Comments:

Driveway "A" is an existing right-in/right-out access point.

Worksheet Developed by Terry O. Brown, P.E.

Table 17.B-2
Criteria For Deceleration Lanes On
URBAN MULTI-LANE HIGHWAYS

Turning Volume[1] (vph)	LEFT-TURN DECELERATION LANE Minimum Volume in Adjacent Through Lane (vphpl)[2]			RIGHT-TURN DECELERATION LANE Minimum Volume in Adjacent Through Lane (vphpl)[2]		
	≤30 mph	35 to 40 mph	45 to 55 mph	≤30 mph	35 to 40 mph	45 to 55 mph
<5	**Not Required**	**Not Required**	**Not Required**	**Not Required**	**Not Required**	**Not Required**
5	**Not Required**	**490**	**420**	**1,200**	**730**	**450**
10	**420**	**370**	**300**	**820**	**490**	**320**
15	**360**	**290**	**220**	**600**	**350**	**240**
20	**310**	**230**	**160**	**460**	**260**	**180**
25	**270**	**190**	**130**	**360**	**230**	**150**
30	**240**	**160**	**110**	**290**	**200**	**130**
35	**210**	**130**	**100**	**260**	**180**	**120**
40	**180**	**120**	**Required**	**240**	**170**	**110**
45	**160**	**110**	**Required**	**220**	**160**	**Required**
50	**140**	**Required**	**Required**	**200**	**Required**	**Required**
55	**120**	**Required**	**Required**	**190**	**Required**	**Required**
≥56	**Required**	**Required**	**Required**	**Required**	**Required**	**Required**
	Left-turn Decelerataion Lanes are Required on Urban Multi-lane Highways for the following Left-turn Volumes: • ≤30 mph : 56 vph or more • 35 to 40 mph : 46 vph or more • 45 to 55 mph : 36 vph or more			***Right-turn Decelerataion Lanes are Required on Urban Multi-lane Highways for the following Right-turn Volumes:*** • ≤30 mph : 56 vph or more • 35 to 40 mph : 46 vph or more • 45 to 55 mph : 41 vph or more		

Notes:

1. *Use linear interpolation for turning volumes between 5 and 55 vph.*
2. *The volume in the adjacent through lane includes through vehicles and turning vehicles.*

Traffic Count Data Sheet

Year Counts Taken: **2023**

E-W Street **Driveway "A"**
N-S Street: **Coors Blvd**

Unsignalized

Speed Limit (Driveway "A")= **25**
Speed Limit (Coors Blvd)= **45**
5/2/23

Begin Time	End Time	Eastbound (Driveway "A")			Westbound (Driveway "A")			Northbound (Coors Blvd)			Southbound (Coors Blvd)		
		L	T	R	L	T	R	L	T	R	L	T	R
7:00 AM	7:15 AM	0	0	0	0	0	0	0	291	0	0	522	4
7:15 AM	7:30 AM	0	0	4	0	0	0	0	355	0	0	616	1
7:30 AM	7:45 AM	**0**	**0**	**2**	**0**	**0**	**0**	**0**	**455**	**0**	**0**	**679**	**2**
7:45 AM	8:00 AM	0	0	2	0	0	0	0	441	0	0	649	1
8:00 AM	8:15 AM	0	0	4	0	0	0	0	422	0	0	545	0
8:15 AM	8:30 AM	0	0	2	0	0	0	0	377	0	0	514	3
8:30 AM	8:45 AM	0	0	3	0	0	0	0	445	0	0	496	2
8:45 AM	9:00 AM	0	0	5	0	0	0	0	404	0	0	463	8
4X Peak 15-Min. Vol. (AM)		**0**	**0**	**8**	**0**	**0**	**0**	**0**	**1820**	**0**	**0**	**2716**	**8**
% of Total Traffic		0.0%	0.0%	0.2%	0.0%	0.0%	0.0%	0.0%	40.0%	0.0%	0.0%	59.7%	0.2%
% Directional			0.2%			0.0%	**Intersection**		40.0%			59.8%	

Begin Time	End Time	Eastbound (Driveway "A")			Westbound (Driveway "A")			Northbound (Coors Blvd)			Southbound (Coors Blvd)		
		L	T	R	L	T	R	L	T	R	L	T	R
4:00 PM	4:15 PM	0	0	3	0	0	0	0	548	0	0	511	7
4:15 PM	4:30 PM	0	0	6	0	0	0	0	601	0	0	455	8
4:30 PM	4:45 PM	0	0	4	0	0	0	0	567	0	0	478	4
4:45 PM	5:00 PM	0	0	3	0	0	0	0	607	0	0	449	6
5:00 PM	5:15 PM	0	0	4	0	0	0	0	623	0	0	452	4
5:15 PM	5:30 PM	**0**	**0**	**6**	**0**	**0**	**0**	**0**	**658**	**0**	**0**	**464**	**6**
5:30 PM	5:45 PM	0	0	7	0	0	0	0	539	0	0	450	2
5:45 PM	6:00 PM	0	0	4	0	0	0	0	528	0	0	439	7
4X Peak 15-Min. Vol. (PM)		**0**	**0**	**24**	**0**	**0**	**0**	**0**	**2632**	**0**	**0**	**1856**	**24**
% of Total Traffic		0.0%	0.0%	0.5%	0.0%	0.0%	0.0%	0.0%	58.0%	0.0%	0.0%	40.9%	0.5%
% Directional			0.5%			0.0%	**Intersection**		58.0%			41.4%	

Traffic Count Data Sheet

Year Counts Taken: **2023**

E-W Street **Sequoia Rd**
N-S Street: **Coors Blvd**

Signalized

Speed Limit (Sequoia Rd)= **30**
Speed Limit (Coors Blvd)= **45**
5/2/23

Begin Time	End Time	Eastbound (Sequoia Rd)			Westbound (Sequoia Rd)			Northbound (Coors Blvd)			Southbound (Coors Blvd)		
		L	T	R	L	T	R	L	T	R	L	T	R
7:00 AM	7:15 AM	16	4	43	7	1	1	8	280	0	4	513	6
7:15 AM	7:30 AM	11	4	42	10	5	5	21	335	10	4	601	9
7:30 AM	7:45 AM	**15**	**7**	**58**	**17**	**9**	**5**	**15**	**436**	**7**	**5**	**665**	**3**
7:45 AM	8:00 AM	22	10	68	10	6	3	25	418	13	9	641	12
8:00 AM	8:15 AM	23	3	43	10	3	3	24	387	8	10	538	12
8:15 AM	8:30 AM	12	4	28	9	4	3	18	365	6	4	499	10
8:30 AM	8:45 AM	23	4	42	8	3	4	24	412	2	4	475	14
8:45 AM	9:00 AM	21	10	36	20	5	3	22	384	9	6	448	7
4X Peak 15-Min. Vol. (AM)		**60**	**28**	**232**	**68**	**36**	**20**	**60**	**1744**	**28**	**20**	**2660**	**12**
% of Total Traffic		1.2%	0.6%	4.7%	1.4%	0.7%	0.4%	1.2%	35.1%	0.6%	0.4%	53.5%	0.2%
% Directional			6.4%			2.5%	**Intersection**		36.9%			54.2%	

Begin Time	End Time	Eastbound (Sequoia Rd)			Westbound (Sequoia Rd)			Northbound (Coors Blvd)			Southbound (Coors Blvd)		
		L	T	R	L	T	R	L	T	R	L	T	R
4:00 PM	4:15 PM	24	9	38	35	29	10	41	488	18	15	479	12
4:15 PM	4:30 PM	19	20	38	37	19	9	41	568	22	12	440	17
4:30 PM	4:45 PM	32	17	47	30	27	8	37	517	31	15	455	16
4:45 PM	5:00 PM	27	36	37	41	24	15	29	551	31	18	418	13
5:00 PM	5:15 PM	20	35	57	32	42	9	27	574	36	11	441	18
5:15 PM	5:30 PM	**40**	**37**	**36**	**32**	**27**	**14**	**45**	**593**	**35**	**17**	**447**	**7**
5:30 PM	5:45 PM	18	19	38	34	21	15	34	511	32	11	429	13
5:45 PM	6:00 PM	24	14	34	34	24	7	35	497	29	14	402	14
4X Peak 15-Min. Vol. (PM)		**160**	**148**	**144**	**128**	**108**	**56**	**180**	**2372**	**140**	**68**	**1788**	**28**
% of Total Traffic		3.0%	2.8%	2.7%	2.4%	2.0%	1.1%	3.4%	44.6%	2.6%	1.3%	33.6%	0.5%
% Directional			8.5%			5.5%	**Intersection**		50.6%			35.4%	

Traffic Count Data Sheet

Year Counts Taken: **2023**

E-W Street **Sequoia Rd**
N-S Street: **Driveway "B"**
Unsignalized

Speed Limit (Sequoia Rd)= **30**
Speed Limit (Driveway "B")= **25**
5/2/23

Begin Time	End Time	Eastbound (Sequoia Rd)			Westbound (Sequoia Rd)			Northbound (Driveway "B")			Southbound (Driveway "B")		
		L	T	R	L	T	R	L	T	R	L	T	R
7:00 AM	7:15 AM	3	55	0	0	12	0	0	0	0	1	0	1
7:15 AM	7:30 AM	2	61	0	0	24	3	0	0	0	2	0	2
7:30 AM	7:45 AM	4	82	0	0	29	0	0	0	0	3	0	0
7:45 AM	8:00 AM	**2**	**96**	**0**	**0**	**34**	**3**	**0**	**0**	**0**	**2**	**0**	**0**
8:00 AM	8:15 AM	2	67	0	0	29	5	0	0	0	0	0	0
8:15 AM	8:30 AM	2	50	0	0	31	1	0	0	0	0	0	3
8:30 AM	8:45 AM	1	60	0	0	32	3	0	0	0	0	0	2
8:45 AM	9:00 AM	6	57	0	0	22	6	0	0	0	1	0	0
4X Peak 15-Min. Vol. (AM)		**8**	**384**	**0**	**0**	**136**	**12**	**0**	**0**	**0**	**8**	**0**	**0**
% of Total Traffic		1.5%	70.1%	0.0%	0.0%	24.8%	2.2%	0.0%	0.0%	0.0%	1.5%	0.0%	0.0%
% Directional			71.5%			27.0%	**Intersection**		0.0%			1.5%	

Begin Time	End Time	Eastbound (Sequoia Rd)			Westbound (Sequoia Rd)			Northbound (Driveway "B")			Southbound (Driveway "B")		
		L	T	R	L	T	R	L	T	R	L	T	R
4:00 PM	4:15 PM	2	62	0	0	64	9	0	0	0	3	0	4
4:15 PM	4:30 PM	4	62	0	0	72	3	0	0	0	7	0	2
4:30 PM	4:45 PM	5	71	0	0	67	2	0	0	0	3	0	2
4:45 PM	5:00 PM	3	75	0	0	60	1	0	0	0	4	0	4
5:00 PM	5:15 PM	**5**	**99**	**0**	**0**	**77**	**2**	**0**	**0**	**0**	**0**	**0**	**4**
5:15 PM	5:30 PM	0	86	0	0	72	8	0	0	0	3	0	4
5:30 PM	5:45 PM	2	65	0	0	63	4	0	0	0	7	0	2
5:45 PM	6:00 PM	2	57	0	0	70	5	0	0	0	2	0	5
4X Peak 15-Min. Vol. (PM)		**20**	**396**	**0**	**0**	**308**	**8**	**0**	**0**	**0**	**0**	**0**	**16**
% of Total Traffic		2.7%	52.9%	0.0%	0.0%	41.2%	1.1%	0.0%	0.0%	0.0%	0.0%	0.0%	2.1%
% Directional			55.6%			42.2%	**Intersection**		0.0%			2.1%	

SCOPE OF TRAFFIC IMPACT STUDY (TIS)

TO: Ronald R. Bohannan, P.E.
Tierra West, LLC
5571 Midway Park Pl. NE
Albuquerque, NM 87108

MEETING DATE: Thursday March 12, 2023 - 2:00PM

ATTENDEES: Matthew Grush, P.E. (City of Albuquerque), Margaret Haynes, P.E. (NM DOT D3), Ronald R. Bohannan, P.E., Amanda Herrera, P.E., Derek Bohannan, Terry Brown (Tierra West, LLC), and Sujay Thakur (Owner)

PROJECT: Global Storage (3421 Coors Blvd NW)

REQUESTED CITY ACTION: ___ Zone Change __X__ Site Development Plan

___ Subdivision ___ Building Permit ___ Sector Plan ___ Sector Plan Amendment

___ Curb Cut Permit ___ Conditional Use ___ Annexation ___ Site Plan Amendment

ASSOCIATED APPLICATION: Proposed Development will include a new self-storage facility and an extension to an existing brewery restaurant (Sombremesa expansion 3,800SF and 150,000SF of Storage Facility)

SCOPE OF REPORT:
The Traffic Impact Study should follow the standard report format, which is outlined in the DPM. The following supplemental information is provided for the preparation of this specific study.

1. Trip Generation - Use Trip Generation Manual, 11th Edition.
   Local data may be used for certain land use types as determined by staff.
   Consultant to provide.

2. Appropriate study area:
   Signalized Intersections;
   a. Coors Blvd. / Sequoia Rd.

   Unsignalized Intersections;

   Driveway Intersections:
   a. Coors Blvd. / Driveway at Sombremesa shared access (right-in, right-out)
   b. Sequoia Rd / Driveway at South Chiropractor entrance (full access)

3. Intersection turning movement counts
   Study Time – 7-9 a.m. peak hour, 4-6 p.m. peak hour
   Consultant to provide for all intersections listed above.
   (Intersection turning movements counts to be correlated with TAQA data)

4. Type of intersection progression and factors to be used.

Type III arrival type (see “Highway Capacity Manual, current edition” or equivalent as approved by staff). Unless otherwise justified, peak hour factors and % heavy commercial should be taken directly from the MRCOG turning movement data provided or as calculated from current count data by consultant.

5. Boundaries of area to be used for trip distribution.

City Wide - residential, office or industrial;
2 mile radius – commercial;
Interstate or to be determined by consultant - motel/hotel
APS district boundary mapping for each school and bus routes

6. Basis for trip distribution.

Residential – Use inverse relationship based upon distance and employment. Use employment data from 2040 Socioeconomic Forecasts, MRCOG – See MRCOG website for most current data.

Office/Industrial - Use inverse relationship based upon distance and population. Use population data from 2040 Socioeconomic Forecasts, MRCOG – See MRCOG website for most current data.

Commercial - Use relationship based upon population. Use population data from 2040 Socioeconomic Forecasts, MRCOG – See MRCOG website for most current data.

Residential - $Ts = (Tt) (Se / D) / (Se / D)$
Ts = Development to Individual Subarea Trips
Tt = Total Trips
Se = Subarea Employment
D = Distance from Development to Subarea

Office/Industrial - $Ts = (Tt) (Sp / D) / (Sp / D)$
Ts = Development to Individual Subarea Trips
Tt = Total Trips
Sp = Subarea Population
D = Distance from Development to Subarea

Commercial -
$Ts = (Tt) (Sp) / (Sp)$
Ts = Development to Individual Subarea Trips
Tt = Total Trips
Sp = Subarea Population

7. Traffic Assignment. Logical routing on the major street system.

8. Proposed developments which have been approved but not constructed that are to be Included in the analyses. Projects in the area include:
   a. Proposed Coors Pavilion located NW Corner Coors Blvd and St. Josephs
   b. Proposed Oxbow Development located at SW Corner Coors Blvd and St. Josephs

9. Method of intersection capacity analysis - planning or operational (see "2016 Highway Capacity Manual" or equivalent [i.e. HCS, Synchro, etc.] as approved by staff). Must use latest version of design software and/or current edition of design manual. NM DOT requires HCS (current version) for signalized intersection analysis.
   Implementation Year: 2024
   Horizon Year: 2034

10. Traffic conditions for analysis:
    a. Existing analysis __ yes _X_ no - year (N/A);
    b. Phase implementation year(s) without proposed development – 2024
    c. Phase implementation year(s) with proposed development – 2024
    d. Project completion year without proposed development – 2034
    e. Project completion year with proposed development – 2034
    f. Other –

11. Background traffic growth.
    Method: use 10-year historical growth based on standard data from the MRCOG Traffic Flow Maps. Minimum growth rate to be used is 1/2%.

12. Planned (programmed) traffic improvements.
    List planned CIP improvements in study area and projected project implementation year:
    a. Project – Location (Implementation Year) – To be followed up with Tim Brown at COA Traffic.

13. Items to be included in the study:
    a. Intersection analysis. Yes
    b. Signal progression - An analysis is required if the driveway analysis indicates a traffic signal is possibly warranted. Analysis Method: N/A
    c. Arterial LOS analysis; No
    d. Recommended street, intersection and signal improvements. Yes
    e. Site design features such as turning lanes, median cuts, queuing requirements and site circulation, including driveway signalization and visibility. Yes
    f. Transportation system impacts. Yes
    g. Other mitigating measures.
    h. Accident analyses _X_ yes __ no; Location(s): Coors Blvd. / Sequoia Rd. (5years)
    i. Weaving analyses __ yes _X_ no; Location(s):

14. Other:

NM DOT requires traffic counts at Sequoia Rd. / Coors Blvd. to be demand volumes. Multiple period analysis required if v/c ratio for any turning movement is greater than 0.99.

SUBMITTAL REQUIREMENTS:

1. Number of copies of report required
   ~~a. 1 paper copy~~
   b. 1 digital copy, with a DTIS sent to PLNDRS@cabq.gov and copy mgrush@cabq.gov
2. Submittal Fee – $1300 for up to 3 reviews (plus technology fee)

The Traffic Impact Study for this development proposal, project name, shall be performed in accordance with the above criteria. If there are any questions regarding the above items, please contact me at 924-3362.

3/24/2023

Matt Grush, P.E.
Senior Engineer
City of Albuquerque, Planning
Transportation Development Section

Date

via: email

C: TIS Task Force Attendees, file