CITY OF ALBUQUERQUE

Planning Department
Alan Varela, Director

Mayor Timothy M. Keller

August 30, 2024

Lauren A. Nuffer, P.E.
Kimley-Horn and Associates, Inc.
4727 Gaillardia Parkway, Suite 250
Oklahoma City, OK 73142

RE: Olive Garden – St Joseph's NW
3823 Coors Blvd. NW
Grading & Drainage Plans
Engineer's Stamp Date: 08/19/24
Hydrology File: G11D067F

Dear Ms. Nuffer:

PO Box 1293

Albuquerque

NM 87103

www.cabq.gov

Based upon the information provided in your submittal received 08/22/2024, the Grading & Drainage Plans are approved for Building Permit, and Grading Permit. Please attach a copy of this approved plan in the construction sets for Building Permit processing along with a copy of this letter.

PRIOR TO CERTIFICATE OF OCCUPANCY:

1. Engineer's Certification, per the DPM Part 6-14 (F): *Engineer's Certification Checklist For Non-Subdivision* is required.
2. Please provide the executed paper Drainage Covenant (latest revision) printed on one-side only with Exhibit A and a check for **$25.00** made out to "**Bernalillo County**" for the detention pond per Article 6-15(C) of the DPM to Hydrology for review at Plaza de Sol.
3. The Southern Oxbow Center's (overall development) Owner will have to substantially completed the following:
    a. The Work Order for all improvements within the R.O.W. of St. Joseph as outlined in the Infrastructure List (PR-2021-005597).
    b. All private access drives and private drainage structures to convey the storm discharge from this site to the ultimate outfall point for Southern Oxbow Center which is the existing 36-inch storm sewer stub on Coors Blvd.

If the project total area of disturbance (including the staging area and any work within the adjacent Right-of-Way) is 1 acre or more, then an Erosion and Sediment Control (ESC) Plan and Owner's certified Notice of Intent (NOI) is required to be submitted to the Stormwater Quality

Engineer (Doug Hughes, PE, jhughes@cabq.gov, 924-3420) 14 days prior to any earth disturbance.

If you have any questions, please contact me at 924-3995 or rbrissette@cabq.gov.

Sincerely,

Renée C. Brissette

Renée C. Brissette, P.E. CFM
Senior Engineer, Hydrology
Planning Department

PO Box 1293

Albuquerque

NM 87103

www.cabq.gov

City of Albuquerque

Planning Department
Development & Building Services Division

DRAINAGE AND TRANSPORTATION INFORMATION SHEET (DTIS)

Project Title: Olive Garden Hydrology File # _____
Legal Description: The University of Albuquerque Urban Center, Lot 2 (portion of tract X-2-A) G-11-Z
City Address, UPC, OR Parcel: 3823 Coors Blvd. NW, Albuquerque, NM 87120 / 101106022435921402

Applicant/Agent: CDS Development Contact: Christie Schachter
Address: 16775 Addison Rd. Suite 550., Addison, TX 75001 Phone: 214-538-3086
Email: CSchachter@CDSDevelopment.com

Applicant/Owner: Olive Garden Holdings, LLC Contact: Jim Powell
Address: 1000 Darden Center Dr., Orlando, FL 32837 Phone: 903-523-0566
Email: JEPowell@Darden.com

TYPE OF DEVELOPMENT: ☐ Plat (# of lots) _____ ☐ Single Family Home
☑ All other Developments

RE-SUBMITTAL: ☐ YES ☑ NO

DEPARTMENT: ☐ TRANSPORTATION ☑ HYDROLOGY/DRAINAGE

Check all that apply under Both the Type of Submittal and the Type of Approval Sought:

TYPE OF SUBMITTAL:

- ☐ Engineering / Architect Certification
- ☐ Conceptual Grading & Drainage Plan
- ☑ Grading & Drainage Plan, and/or Drainage Report
- ☐ Drainage Report (Work Order)
- ☐ Drainage Master Plan
- ☐ Conditional Letter of Map Revision (CLOMR)
- ☐ Letter of Map Revision (LOMR)
- ☐ Floodplain Development Permit
- ☐ Traffic Circulation Layout (TCL) – Administrative
- ☐ Traffic Circulation Layout (TCL) – DFT Approval
- ☐ Traffic Impact Study (TIS)
- ☐ Street Light Layout
- ☐ OTHER (SPECIFY)_____

TYPE OF APPROVAL SOUGHT:

- ☐ Pad Certification
- ☑ Building Permit
- ☑ Grading Permit
- ☑ Paving Permit
- ☐ SO-19 Permit
- ☑ Foundation Permit
- ☐ Certificate of Occupancy - ☐ Temp ☐ Perm
- ☐ Preliminary / Final Plat
- ☐ Site Plan for Building Permit - DFT
- ☐ Work Order (DRC)
- ☐ Release of Financial Guarantee (ROFG)
- ☐ CLOMR / LOMR
- ☐ Conceptual TCL - DFT
- ☐ OTHER (SPECIFY) _____

DATE SUBMITTED: 8.22.2024

REV. 04/03/24

City of Albuquerque
Planning Department
Development Review Services
HYDROLOGY SECTION
APPROVED
DATE: 08/30/24
BY: Renee C. Brissette
HydroTrans # G11D067F

THE APPROVAL OF THESE PLANS/REPORT SHALL NOT BE CONSTRUED TO PERMIT VIOLATIONS OF ANY CITY ORDINANCE OR STATE OR FEDERAL LAW. IT IS THE DESIGNER'S THE CITY OF ALBUQUERQUE FROM REQUIRING CORRECTION, OR ERROR OR DIMENSIONS IN PLANS. SHOULD ANY DEVIATION FROM THE APPROVED PLANS SHALL NOT BE CHANGED, MODIFIED OR ALTERED WITHOUT AUTHORIZATION.

APPROVAL OF GRADING & DRAINAGE PLAN(S) SHALL EXPIRE TWO (2) YEARS AFTER THE APPROAL DATE BY THE CITY IF NO BUILDING PERMIT HAS BEEN PULLED ON THE DEVELOPMENT.

CONTROL POINTS
CP 1 - N=1501731.43
E=1505848.04
EL=5109.14
CONTROL POINT
ON CURB
CP 2 - N=1502725.05
E=1505435.71
EL=5118.69
CONTROL POINT
ON CURB
CP 3 - N=1502640.50
E=1504651.34
EL=5113.60
CONTROL POINT
ON CURB

NGS/ALBUQUERQUE CONTROL SURVEY
MONUMENT "JOSEPH 1969"
N.M. STATE PLANE COORDINATES
(CENTRAL ZONE - NAD83)
N=1,502,309.28
E=1,506,932.687
DELTA ALPHA = -00°15'24.78"
GROUND TO GRID FACTOR = 0.999679588
ELEVATION=5116.61 (NAVD8)

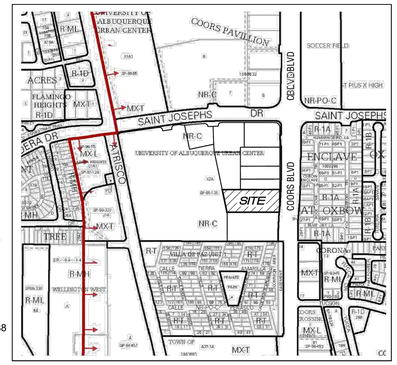

VICINITY MAP
NTS

NORTH

GRAPHIC SCALE IN FEET
0 10 20 40

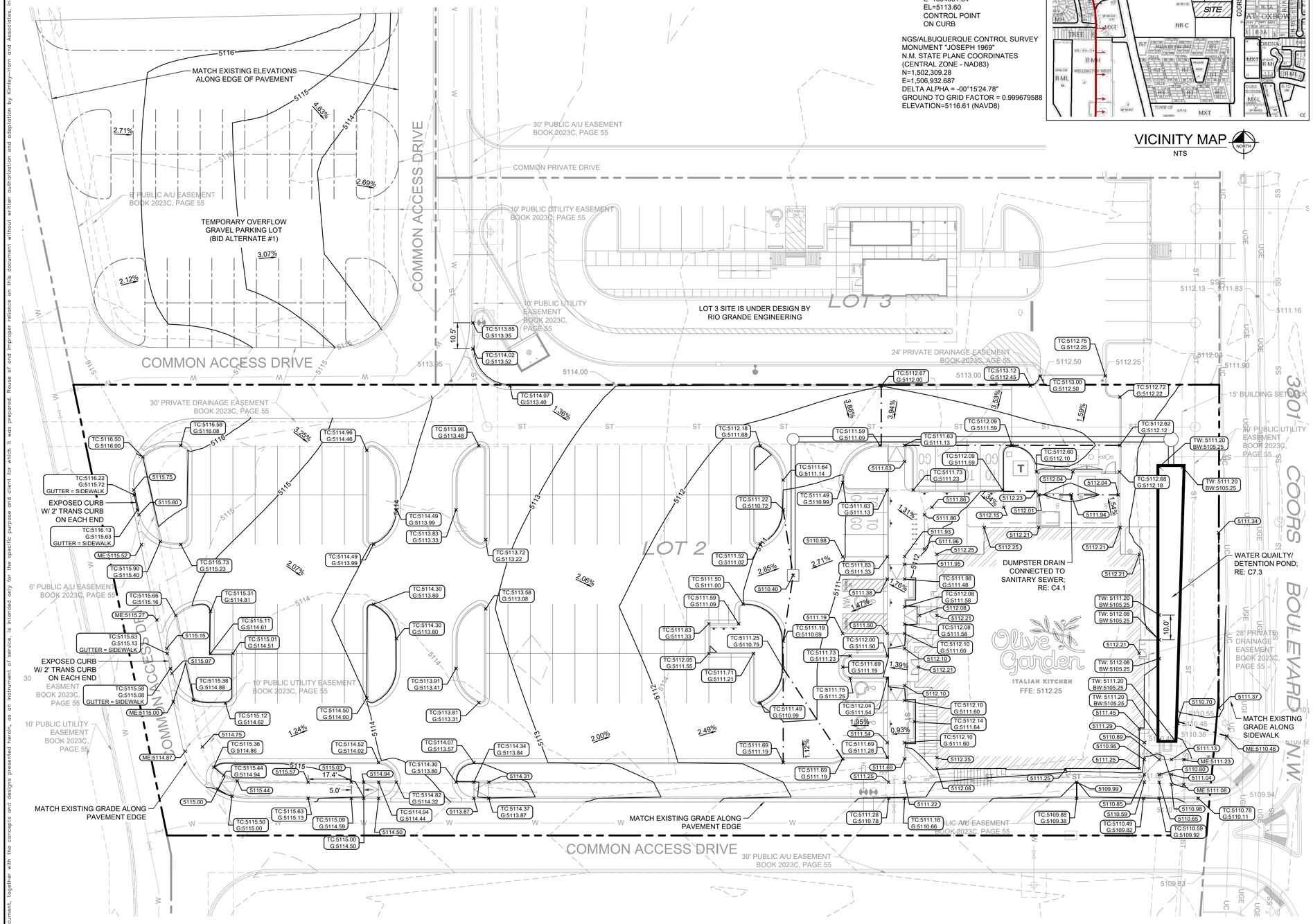

GRADING AND DRAINAGE NOTES

1. ALL ADA ACCESSIBLE ROUTES AND PARKING (INCLUDING DRIVEWAY CROSSWALKS) SHALL CONFORM TO ADA STANDARDS. IF A DISCREPANCY IS DISCOVERED, THE CONTRACTOR SHALL NOTIFY THE ENGINEER PRIOR TO PLACING PAVEMENT. BEFORE PLACING PAVEMENT, CONTRACTOR SHALL VERIFY THAT SIDEWALKS AND PEDESTRIAN ROUTES DO NOT EXCEED A 5% SLOPE IN THE PATH OF TRAVEL OR A 2% CROSS SLOPE, AND CONTRACTOR SHALL VERIFY THAT ACCESIBLE PARKING AREAS (INCLUDING THE ADJOINING ACCESS AISLES) DO NOT EXCEED A 2% SLOPE IN ANY DIRECTION. CONTRACTOR SHALL TAKE FEILD SLOPE MEASUREMENTS ON FINISHED SUBGRADE AND FORM BOARDS PIOR TO PLACING PAVEMENT TO ENSURE ADA SLOPE CRITERIA ARE NOT EXCEEDED. CONTRACTOR SHALL CONTACT ENGINEER PRIOR TO PLACING PAVEMENT IF ANY EXCESSIVE SLOPES ARE ENCOUNTERED. NO CHANGE ORDERS WILL BE ACCEPTED FOR ADA SLOPE COMPLIANCE ISSUES.
2. ALL UTILITY STRUCTURES SHALL BE ADJUSTED TO PROPER LINE AND GRADE BEFORE FINAL ACCEPTANCE. CONTRACTOR SHALL ADJUST EXISTING VALVES, MANHOLE RIMS, ETC. AS NECESSARY TO MATCH FINISHED GRADE.
3. CONTRACTOR SHALL SOD/SEED OR LANDSCAPE ALL DISTURBED AREAS WHICH ARE NOT PAVED. REFER TO LANDSCAPE PLANS.
4. ON TURF, MINIMUM SLOPES SHALL BE 1% AND MAXIMUM SLOPES SHALL NOT EXCEED 4H:1V, UNLESS OTHERWISE NOTED.
5. FINISHED GRADES DIRECTLY ADJACENT TO THE BUILDING(S) THAT ARE NOT PAVED SHALL BE 2-INCHES BELOW FINISHED FLOOR ELEVATION UNLESS OTHERWISE NOTED.
6. FINISHED GRADES ADJACENT TO THE BUILDING(S) SHALL BE SLOPED AT A MINIMUM OF 1% AWAY FROM THE BUILDING FOR PAVED SURFACES AND 2% AWAY FROM THE BUILDING FOR LANDSCAPED AREAS UNLESS OTHERWISE NOTED.
7. CONTRACTOR TO ENSURE THAT PONDING OF STORM WATER DOES NOT OCCUR WITHIN PAVED AREAS WHERE WORK IS PERFORMED.
8. CONTRACTOR SHALL REFER TO ARCHITECTURAL PLANS FOR EXACT BUILDING FOOTPRINT DIMENSIONS.
9. CONTRACTOR SHALL REFER TO FINAL GEOTECH REPORT FOR BUILDING SUBGRADE AND SITE PREPARATION REQUIREMENTS.

LEGEND

	PROPERTY LINE
	FLOW LINE
	GRADE BREAK LINE
5111	PROPOSED ELEVATIONS (BY OTHERS)
5111	PROPOSED CONTOURS
ME:5111.00	MATCH EXISTING GRADE
5111.00	TOP OF PAVEMENT
TC:5110.50 G:5110.00	TOP OF CURB/GUTTER
TW:5111.75 BW:5105.25	TOP OF WALL/BOTTOM OF WALL

LEGAL DESCRIPTION

AS CONTAINED IN THE TITLE COMMITMENT PREPARED FOR THIS PROPERTY BY FIDELITY NATIONAL TITLE INSURANCE COMPANY, COMMITMENT NO. SP0001300661, COMMITMENT DATE: JULY 26, 2023.

LOT NUMBERED TWO (2) OF THE PLAT OF LOTS 1 THRU 10, THE UNIVERSITY OF ALBUQUERQUE URBAN CENTER, BEING WITHIN THE TOWN OF ATRISCO GRANT IN PROJECTED SECTION 2, TOWNSHIP 10 NORTH, RANGE 2 EAST OF THE NEW MEXICO PRINCIPAL MERIDIAN, CITY OF ALBUQUERQUE, BERNALILLO COUNTY, NEW MEXICO, AS THE SAME IS SHOWN AND DESIGNATED ON THE PLOT OF SAID SUBDIVISION, FILED IN THE OFFICE OF THE COUNTY CLERK IF BERNALILLO, NEW MEXICO, ON JULY 11, 2023 IN PLAT BOOK 2023C, PAGE 55.

FLOOD ZONE DETERMINATION

THE SUBJECT PROPERTY (AS SHOWN HEREON) LIES WITHIN ZONE "X" (AREA OF MINIMAL FLOOD HAZARD) IN ACCORDANCE WITH THE NATIONAL FLOOD INSURANCE PROGRAM RATE MAP NO. 35001C0114 H, EFFECTIVE DATE 08-16-2012.

CAUTION!!
EXISTING UNDERGROUND UTILITIES IN THE AREA CONTRACTOR IS RESPONSIBLE FOR DETERMINING THE HORIZONTAL AND VERTICAL LOCATION OF ALL UTILITIES PRIOR TO CONSTRUCTION. CONTRACTOR SHALL BE RESPONSIBLE FOR REPAIRING EXISTING UTILITIES DUE TO DAMAGE INCURRED DURING CONSTRUCTION. CONTRACTOR SHALL NOTIFY THE ENGINEER OF ANY DISCREPANCIES ON THE PLANS.

nm811 Know what's below. Call before you dig.

No.	REVISIONS	DATE	BY

Kimley»Horn
© 2024 KIMLEY-HORN AND ASSOCIATES, INC.
4727 GAILLARDIA PARKWAY, SUITE 250, OKLAHOMA CITY, OK 73142
PHONE: 405-241-5423
WWW.KIMLEY-HORN.COM

LAUREN A. NUTTER
NEW MEXICO
24254
PROFESSIONAL ENGINEER
08/19/2024

KHA PROJECT	063887193
DATE	AUGUST 2024
SCALE	AS SHOWN
DESIGNED BY	JJK
DRAWN BY	JCE
CHECKED BY	LN

OLIVE GARDEN
3823 COORS BLVD. NW
ALBUQUERQUE, NM 87120

GRADING AND DRAINAGE PLAN 1

SHEET NUMBER
C7.1

This document, together with the concepts and designs presented herein, as an instrument of service, is intended only for the specific purpose and client for which it was prepared. Reuse of and improper reliance on this document without written authorization and adaptation by Kimley-Horn and Associates, Inc. shall be without liability to Kimley-Horn and Associates, Inc.

IMAGES:
XREFS: xBase ; xLANDUSE ; xSurvey ; xSurveyL ; xBorder (24x36)
LAST SAVED: 8/20/2024 1:27 PM
PLOTTED BY: Lauren Nutter Tuesday, August 20, 2024 1:18 PM
DWG NAME: K:\OKC_CIV\063887193-OLI ALBUQUERQUE\CADD\ASBUILTS
DESIGN TYPE: Civil 3D [Grading Plan - Plan Set: GRADING AND DRAINAGE PLAN 1]

City of Albuquerque
Planning Department
Development Review Services
HYDROLOGY SECTION
APPROVED
DATE: 08/30/24
BY: Renée C. Brissette
HydroTrans # G11D067F

THE APPROVAL OF THESE PLANS/REPORT SHALL NOT BE CONSTRUED TO VIOLATE, INVALIDATE, OR WAIVE AN ORDINANCE OR STATE LAW, AND SHALL NOT PREVENT THE CITY OF ALBUQUERQUE FROM REQUIRING CORRECTION OF ERRORS IN THE PLANS/REPORT, SPECIFICATIONS, OR OTHERWISE. PLANS/REPORTS SUCH APPROVED PLANS SHALL NOT BE CHANGED, MODIFIED OR ALTERED WITHOUT AUTHORIZATION.

APPROVAL OF GRADING & DRAINAGE PLAN(S) SHALL EXPIRE TWO (2) YEARS AFTER THE APPROAL DATE BY THE CITY IF NO BUILDING PERMIT HAS BEEN PULLED ON THE DEVELOPMENT.

CONTROL POINTS

CP 1 - N=1501731.43
E=1505848.04
EL=5109.14
CONTROL POINT
ON CURB

CP 2 - N=1502725.05
E=1505435.71
EL=15118.69
CONTROL POINT
ON CURB

CP 3 - N=1502640.50
E=1504651.34
EL=5113.60
CONTROL POINT
ON CURB

NGS/ALBUQUERQUE CONTROL SURVEY
MONUMENT "JOSEPH 1969"
N.M. STATE PLANE COORDINATES
(CENTRAL ZONE - NAD83)
N=1,502,309.28
E=1,506,932.687
DELTA ALPHA = -00°15'24.78"
GROUND TO GRID FACTOR = 0.999679588
ELEVATION=5116.61 (NAVD8)

FLOOD ZONE DETERMINATION

THE SUBJECT PROPERTY (AS SHOWN HEREON) LIES WITHIN ZONE "X" (AREA OF MINIMAL FLOOD HAZARD) IN ACCORDANCE WITH THE NATIONAL FLOOD INSURANCE PROGRAM RATE MAP NO. 35001C0114 H, EFFECTIVE DATE 08-16-2012.

DRAINAGE AREA	AREA (AC)	LAND TREATMENT C		LAND TREATMENT D		TOTAL Q (CFS)
		AREA (AC)	DISCHARGE (CFS/AC)	AREA (AC)	DISCHARGE (CFS/AC)	
DA-1	1.24	0.16	2.87	1.08	4.12	4.91
DA-2	0.04	0.00	2.87	0.04	4.12	0.16
DA-3	0.15	0.00	2.87	0.15	4.12	0.63

KEYNOTE LEGEND

1	CONNECT TO DOWNSPOUT; RE: C7.5
2	6" HDPE SLOPED AT MIN. 1.10%
3	6" HDPE THROUGH CONCRETE RETAINING WALL; RE: C7.9
4	STORM SEWER LINE AND WATER LINE CROSSING (TYP); ENSURE 6" MIN SEPARATION BETWEEN TOP OF STORM SEWER AND BOTTOM OF WATER LINE; ENSURE NO WATER LINE JOINTS ARE WITHIN 5' OF THE CENTER OF STORM SEWER PIPE
5	ELECTRIC/GAS/COMMUNICATION AND STORM CROSSING (TYP); ENSURE 1' MIN SEPARATION BETWEEN STORM SEWER AND ELECTRIC/GAS/COMMUNICATIONS LINES
6	SANITARY SEWER AND STORM CROSSING (TYP); ENSURE 1' MIN SEPARATION BETWEEN STORM SEWER AND SANITARY SEWER LINES
7	STORM LINE CONNECTION W/ DOUBLE CLEANOUT; RE: PLUMBING PLANS

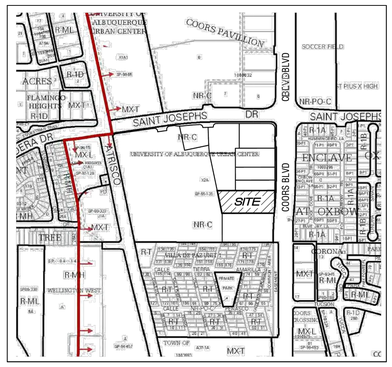

VICINITY MAP
NTS

NORTH

GRAPHIC SCALE IN FEET
0 10 20 40

STORM SEWER NOTES

1. THE CONTRACTOR SHALL VERIFY AND COORDINATE ALL DIMENSIONS SHOWN, INCLUDING THE HORIZONTAL AND VERTICAL LOCATION OF ALL STORM SEWER STRUCTURES AND ALL UTILITIES CROSSING THE STORM SEWER SYSTEM.
2. FLOWLINE, RIM, AND GRATE ELEVATIONS OF PROPOSED STORM SEWER STRUCTURES SHALL BE VERIFIED WITH THE GRADING PLAN AND FIELD CONDITIONS PRIOR TO THEIR INSTALLATION.
3. ALL STORM PIPE CONNECTIONS ENTERING STRUCTURES OR OTHER STORM PIPES SHALL BE WATER-TIGHT.
4. THE CONTRACTOR IS RESPONSIBLE FOR MAINTAINING TRENCH SAFETY REQUIREMENTS IN ACCORDANCE WITH LOCAL, COUNTY, STATE, AND FEDERAL REQUIREMENTS, INCLUDING OSHA, FOR ALL TRENCHES. NO OPEN TRENCHES SHALL BE ALLOWED OVERNIGHT WITHOUT PRIOR WRITTEN APPROVAL.
5. THE CONTRACTOR SHALL KEEP TRENCHES FREE FROM WATER.
6. ALL PRIVATE STORM SEWER PIPES AND FITTINGS SHALL BE DUAL WALL HIGH DENSITY POLYETHLENE (HDPE) WITH WATER-TIGHT JOINTS AND SHALL BE INSTALLED PER MANUFACTURER'S INSTRUCTIONS.
7. RIM ELEVATIONS MEAN TOP OF LID FOR MANHOLES OR JUNCTION BOX AND TOP OF GRATE FOR AREA INLETS.
8. THE INDICATED STRUCTURE SIZE ARE INTERIOR DIMENSIONS.
9. DIMENSIONS ARE TO CENTER OF PIPE AND CENTER OF STRUCTURE.

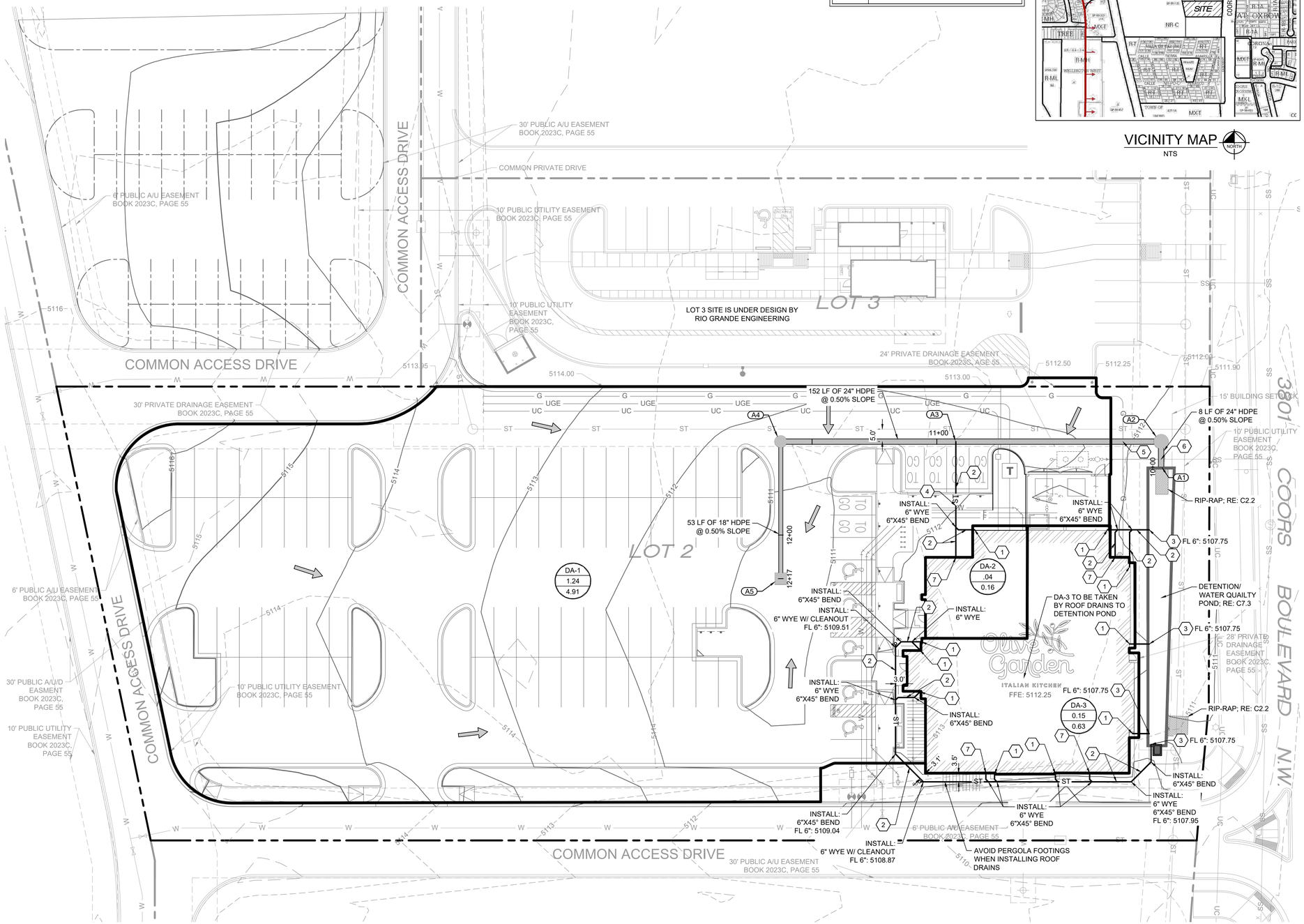

LEGEND

DA-1 / 1.42 / 5.54	DRAINAGE AREA NUMBER; ACREAGE; 100-YR FLOW (CFS) COA METHOD
5112	PROPOSED CONTOUR
5112	EXISTING CONTOUR
	DRAINAGE BOUNDARY
	FLOW DIRECTION
ST	ROOF DRAIN
CO	STORM SEWER CLEANOUT
	STORM SEWER LINE
	STORM SEWER MANHOLE
	STORM SEWER AREA INLET

A1 STA: 10+00 LINE A
INSTALL:
18" HDPE THROUGH CONCRETE RETAINING WALL; RE: C7.9
N: 1502022.87
E: 1505745.60
24" FL IN: 5106.31 (N)

A2 STA: 10+10.08 LINE A
INSTALL:
5' DIA MH
N: 1502032.95
E: 1505745.60
RIM: 5112.00
24" FL IN: 5106.36 (W)
24" FL OUT: 5106.36 (S)

A3 STA: 10+92.39 LINE A
INSTALL:
6" INSTERA TEE
N: 1502032.96
E: 1505663.30
24" FL IN: 5106.77 (W)
24" FL OUT: 5106.77 (E)
6" FL IN: 5107.52 (S)

A4 STA: 11+62.55 LINE A
INSTALL:
4' DIA MH
N: 1502032.96
E: 1505593.13
RIM: 5111.61
18" FL IN: 5107.13 (S)
24" FL OUT: 5107.13 (E)

A5 STA: 12+17.49 LINE A
INSTALL:
SINGLE TYPE D INLET
N: 1501978.02
E: 1505593.13
RIM: 5110.40
18" FL OUT: 5107.40 (N)

CAUTION!
EXISTING UNDERGROUND UTILITIES IN THE AREA. CONTRACTOR IS RESPONSIBLE FOR DETERMINING THE HORIZONTAL AND VERTICAL LOCATION OF ALL UTILITIES PRIOR TO CONSTRUCTION. CONTRACTOR SHALL BE RESPONSIBLE FOR ANY REPAIRS TO EXISTING UTILITIES DAMAGED DURING CONSTRUCTION. CONTRACTOR SHALL NOTIFY THE OWNER OF ANY DISCREPANCIES ON THE PLANS.

nm811 Know what's below. Call before you dig.

No.	REVISIONS	DATE	BY

Kimley»Horn
© 2024 KIMLEY-HORN AND ASSOCIATES, INC.
4727 GAILLARDIA PARKWAY, SUITE 250, OKLAHOMA CITY, OK 73142
PHONE: 405-241-5423
WWW.KIMLEY-HORN.COM

LAUREN A. NUFFER
NEW MEXICO
24254
PROFESSIONAL ENGINEER
08/19/2024

KHA PROJECT	063887193
DATE	AUGUST 2024
SCALE	AS SHOWN
DESIGNED BY	JJK
DRAWN BY	JCE
CHECKED BY	LN

OLIVE GARDEN
3823 COORS BLVD. NW
ALBUQUERQUE, NM 87120

GRADING AND DRAINAGE PLAN 2

SHEET NUMBER
C7.2

This document, together with the concepts and designs presented herein, as an instrument of service, is intended only for the specific purpose and client for which it was prepared. Reuse of and improper reliance on this document without written authorization and adaptation by Kimley-Horn and Associates, Inc. shall be without liability to Kimley-Horn and Associates, Inc.

IMAGES:
WMS 1 [Hillshade_Dark]
WMS 2 [Aerial_Hybrid_Clean]
LAST SAVED BY: JLINDLORD
PLOTTED BY: JLINDLORD
DWG PATH: K:\ONC_DIV\063887193-OLIVEGARDEN\DWG\
DWG NAME: 063887193-OLIVEGARDEN-GRADING PLAN 2.DWG

City of Albuquerque
Planning Department
Development Review Services
HYDROLOGY SECTION
APPROVED
DATE: 08/30/24
BY: Ronald R. Bennett
HydroTrans # G11D067F

THE APPROVAL OF THESE PLANS/REPORT SHALL NOT BE CONSTRUED TO PERMIT VIOLATION OF ANY CITY ORDINANCE OR STATE LAW, AND SHALL NOT PREVENT THE CITY OF ALBUQUERQUE FROM REQUIRING CORRECTION, OR ORDER OF DIMENSIONS IN PLANS, SPECIFICATIONS, OR OTHERWISE. APPROVED PLANS SHALL NOT BE CHANGED, MODIFIED OR ALTERED WITHOUT AUTHORIZATION.

APPROVAL OF GRADING & DRAINAGE PLAN(S) SHALL EXPIRE TWO (2) YEARS AFTER THE APPROVAL DATE BY THE CITY IF NO BUILDING PERMIT HAS BEEN PULLED ON THE DEVELOPMENT.

DRAINAGE AREAS	TOTAL DRAINAGE AREA	DESIGN Tc	CURVE NUMBER	PEAK DISCHARGE, SCS
				100-YEAR
DA NO.	ACRES	MIN.	CN	CFS
PR-1	1.6	12	95	*4.39

* PEAK DISCHARGE FROM DETENTION POND = 2.90 CFS

CONTROL POINTS
CP 1 - N=1501731.43
E=1505848.04
EL=5109.14
CONTROL POINT
ON CURB
CP 2 - N=1502725.05
E=1505435.71
EL=5118.69
CONTROL POINT
ON CURB
CP 3 - N=1502640.50
E=1504651.34
EL=5113.60
CONTROL POINT
ON CURB

NGS/ALBUQUERQUE CONTROL SURVEY
MONUMENT "JOSEPH 1969"
N.M. STATE PLANE COORDINATES
(CENTRAL ZONE - NAD83)
N=1,502,309.28
E=1,506,932.687
DELTA ALPHA = -00°15'24.78"
GROUND TO GRID FACTOR = 0.999679588
ELEVATION=5116.61 (NAVD8)

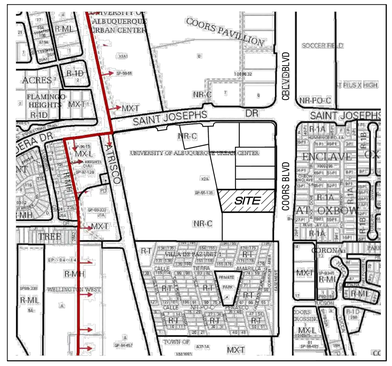

VICINITY MAP
NTS

NORTH

GRAPHIC SCALE IN FEET
0 10 20 40

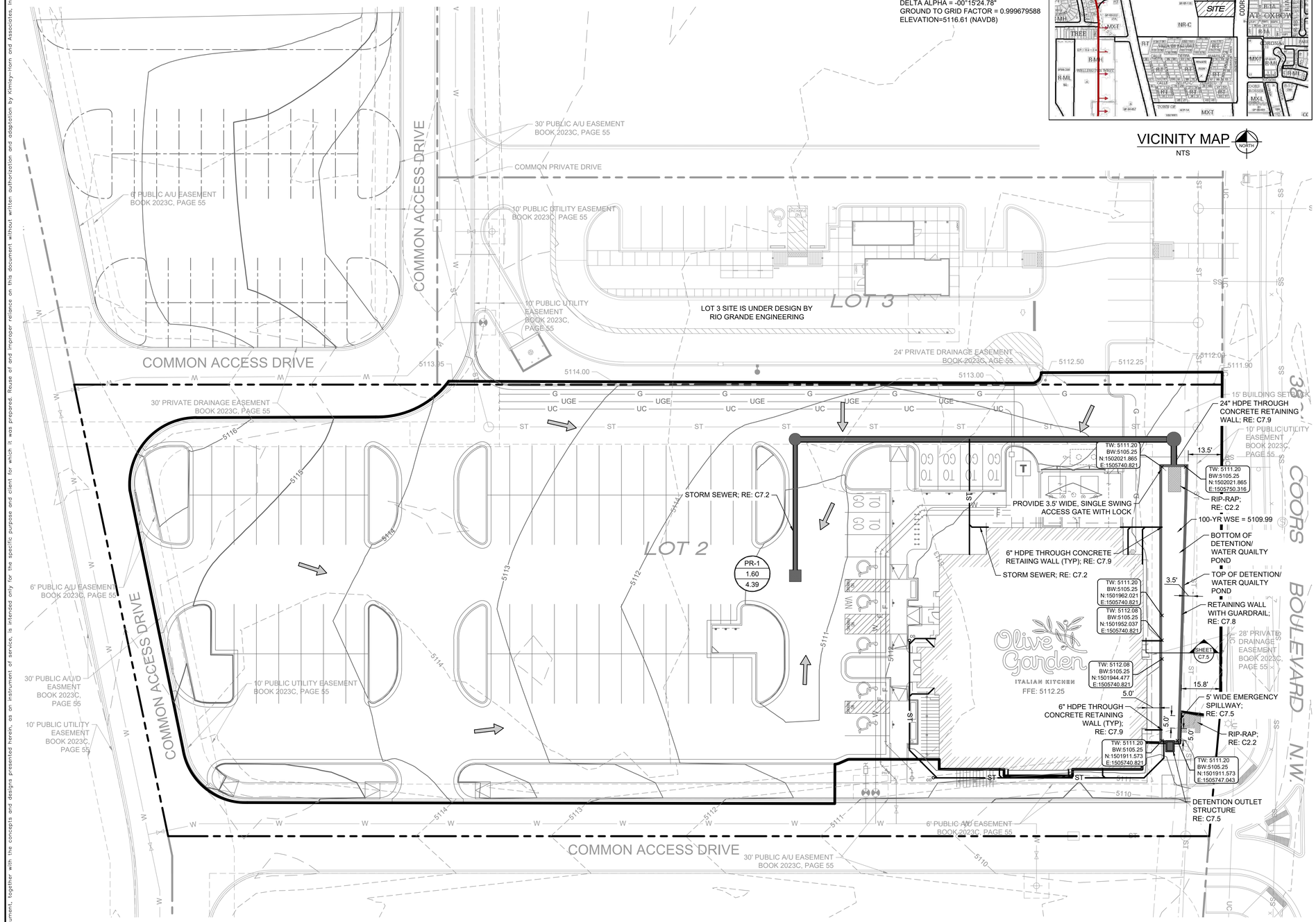

DETENTION NOTES

1. THE CONTRACTOR SHALL VERIFY AND COORDINATE ALL DIMENSIONS SHOWN, INCLUDING THE HORIZONTAL AND VERTICAL LOCATION OF ALL STORM SEWER STRUCTURES AND ALL UTILITIES CROSSING THE STORM SEWER SYSTEM.
2. FLOWLINE, RIM, AND GRATE ELEVATIONS OF PROPOSED STORM SEWER STRUCTURES SHALL BE VERIFIED WITH THE GRADING PLAN AND FIELD CONDITIONS PRIOR TO THEIR INSTALLATION.
3. ALL STORM PIPE CONNECTIONS ENTERING STRUCTURES OR OTHER STORM PIPES SHALL BE WATER-TIGHT.
4. THE CONTRACTOR IS RESPONSIBLE FOR MAINTAINING TRENCH SAFETY REQUIREMENTS IN ACCORDANCE WITH LOCAL, COUNTY, STATE, AND FEDERAL REQUIREMENTS, INCLUDING OSHA, FOR ALL TRENCHES. NO OPEN TRENCHES SHALL BE ALLOWED OVERNIGHT WITHOUT PRIOR WRITTEN APPROVAL.
5. THE CONTRACTOR SHALL KEEP TRENCHES FREE FROM WATER.
6. DIMENSIONS AND NORTHINGS/EASTINGS ARE FROM BACK OF RETAINING WALL.
7. REQUIRED WATER QUAILTY VOLUME = 2173.8 CUBIC FEET
PROVIDED WATER QUAILTY VOLUME = 2187.5 CUBIC FEET
ALLOWABLE DETENTION POND RELEASE RATE = 2.90 CFS
PROVIDED DETENTION POND RELEASE RATE = 2.90 CFS

REQUIRED WATER QUAILTY VOLUME/ALLOWABLE DETENTION POND RELEASE RATE WHERE PROVIDED BY THE APPROVED SOUTHERN OXBOW CENTER MASTER DRAINAGE PLAN ON 1/26/24.

LEGEND

PR-1 / 1.42 / 5.54	DRAINAGE AREA NUMBER; ACREAGE; 100-YR FLOW (CFS) SCS METHOD
5112	PROPOSED CONTOUR
5112	EXISTING CONTOUR
	DRAINAGE BOUNDARY
TW:5111.75 BW:5105.25	TOP OF WALL/BOTTOM OF WALL
	FLOW DIRECTION
ST	ROOF DRAIN
CO	STORM SEWER CLEANOUT
	STORM SEWER LINE
	STORM SEWER MANHOLE
	STORM SEWER AREA INLET

FLOOD ZONE DETERMINATION

THE SUBJECT PROPERTY (AS SHOWN HEREON) LIES WITHIN ZONE "X" (AREA OF MINIMAL FLOOD HAZARD) IN ACCORDANCE WITH THE NATIONAL FLOOD INSURANCE PROGRAM RATE MAP NO. 35001C0114 H, EFFECTIVE DATE 08-16-2012.

CAUTION!!
EXISTING UNDERGROUND UTILITIES IN THE AREA HAVE NOT BEEN LOCATED AND MAY AFFECT THE HORIZONTAL AND VERTICAL LOCATION OF ALL UTILITIES PRIOR TO CONSTRUCTION. CONTRACTOR SHALL BE RESPONSIBLE FOR ANY REPAIRS TO EXISTING UTILITIES DUE TO DAMAGE INCURRED DURING CONSTRUCTION. CONTRACTOR SHALL NOTIFY THE ENGINEER OF ANY DISCREPANCIES ON THE PLANS.

nm811 Know what's below. Call before you dig.

No.	REVISIONS	DATE	BY

Kimley»Horn
© 2024 KIMLEY-HORN AND ASSOCIATES, INC.
4727 GAILLARDIA PARKWAY, SUITE 250, OKLAHOMA CITY, OK 73142
PHONE: 405-241-5423
WWW.KIMLEY-HORN.COM

LAUREN A. NUFFER
NEW MEXICO
24254
PROFESSIONAL ENGINEER
08/19/2024

KHA PROJECT 063887193
DATE AUGUST 2024
SCALE AS SHOWN
DESIGNED BY JJK
DRAWN BY JCE
CHECKED BY LN

OLIVE GARDEN
3823 COORS BLVD. NW
ALBUQUERQUE, NM 87120

GRADING AND DRAINAGE PLAN 3

SHEET NUMBER
C7.3

This document, together with the concepts and designs presented herein, as an instrument of service, is intended only for the specific purpose and client for which it was prepared. Reuse of and improper reliance on this document without written authorization and adaptation by Kimley-Horn and Associates, Inc. shall be without liability to Kimley-Horn and Associates, Inc.

ISSUED
XREFS
PLOT Saved
LAST Saved
DWG NAME
LAYOUT TAB

Line No.	Line ID	Inlet ID	DnStrm Line No.	Line Length	Drainage Area	Flow to Inlet	Tc	Total Flow	Capacity Full	Vel Dn	Line Slope	Line Size	n-value Pipe	Invert Dn	Invert Up	HGL Dn	Grnd/Rim Elev Dn	HGL Up	Grnd/Rim Elev Up
				(ft)	(ac)	(cfs)	(min)	(cfs)	(cfs)	(ft/s)	(%)	(in)		(ft)	(ft)	(ft)	(ft)	(ft)	(ft)
1	A2 TO A1	A2	Outfall	10	0	0	12	5.07	17.33	1.61	0.5	24	0.012	5106.31	5106.36	5109.99	5111.20	5110.00	5111.05
2	A4 TO A2	A4	1	152	0.04	0.16	12	5.07	17.33	1.61	0.5	24	0.012	5106.36	5107.13	5110.04	5112.00	5110.10	5112.00
3	A5 TO A4	A5	2	55	1.24	4.91	12	4.91	7.98	2.78	0.5	18	0.012	5107.13	5107.40	5110.14	5111.61	5110.24	5110.40

EMERGENCY SPILLWAY

1

Hydrograph Summary Report

Hydraflow Hydrographs Extension for Autodesk® Civil 3DB by Autodesk, Inc. v2024

Hyd. No.	Hydrograph type (origin)	Peak flow (cfs)	Time interval (min)	Time to Peak (min)	Hyd. volume (cuft)	Inflow hyd(s)	Maximum elevation (ft)	Total strge used (cuft)	Hydrograph Description
1	SCS Runoff	4.387	1	721	11,723	-----	-----	-----	PR-1
2	Reservoir	4.343	1	722	9,185	1	5111.11	2,939	Detention Output

K:\OKC_Civil\063887193-OG Albuquerque\TEB\Drainage\SCS Detention Calcs.gpw Friday, 08 / 16 / 2024

Hydrograph Report

EMERGENCY SPILLWAY

1

Hydraflow Hydrographs Extension for Autodesk® Civil 3DB by Autodesk, Inc. v2024 Friday, 08 / 16 / 2024

Hyd. No. 2

Detention Output

Hydrograph type	= Reservoir	Peak discharge	= 4.343 cfs
Storm frequency	= 100 yrs	Time to peak	= 722 min
Time interval	= 1 min	Hyd. volume	= 9,185 cuft
Inflow hyd. No.	= 1 - PR-1	Max. Elevation	= 5111.11 ft
Reservoir name	= Detention Pond	Max. Storage	= 2,939 cuft

Storage Indication method used.

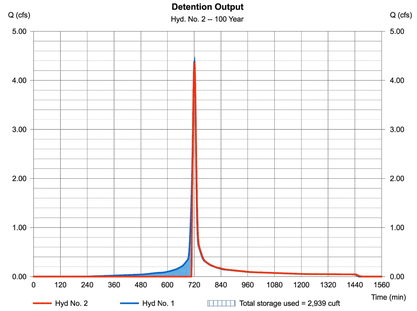

Pond Report

EMERGENCY SPILLWAY

Hydraflow Hydrographs Extension for Autodesk® Civil 3DB by Autodesk, Inc. v2024 Friday, 08 / 16 / 2024

Pond No. 1 - Detention Pond

Pond Data

Contours -User-defined contour areas. Average end area method used for volume calculation. Begining Elevation = 5107.75 ft

Stage / Storage Table

Stage (ft)	Elevation (ft)	Contour area (sqft)	Incr. Storage (cuft)	Total storage (cuft)
0.00	5107.75	875	0	0
1.00	5108.75	875	875	875
2.00	5109.75	875	875	1,750
3.00	5110.75	875	875	2,625
3.45	5111.20	875	394	3,019

Culvert / Orifice Structures

	[A]	[B]	[C]	[PrfRsr]
Rise (in)	Inactive	Inactive	Inactive	Inactive
Span (in)	= 18.00	9.00	0.00	0.00
No. Barrels	= 1	1	0	0
Invert El. (ft)	= 5100.92	5107.75	0.00	0.00
Length (ft)	= 10.00	0.00	0.00	0.00
Slope (%)	= 0.50	0.00	0.00	n/a
N-Value	= .012	.013	.013	n/a
Orifice Coeff.	= 0.60	0.60	0.60	0.60
Multi-Stage	= n/a	Yes	No	No

Weir Structures

	[A]	[B]	[C]	[D]
Crest Len (ft)	= 5.00	Inactive	Inactive	Inactive
Crest El. (ft)	= 5110.70	0.00	0.00	0.00
Weir Coeff.	= 3.33	3.33	3.33	3.33
Weir Type	= Rect	---	---	---
Multi-Stage	= No	No	No	No

Exfil.(in/hr) = 0.000 (by Contour)

TW Elev. (ft) = 0.00

Note: Culvert/Orifice outflows are analyzed under inlet (ic) and outlet (oc) control. Weir risers checked for orifice conditions (ic) and submergence (s).

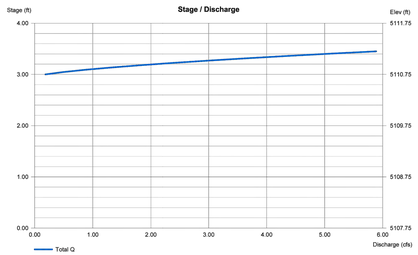

Hydrograph Report

1

Hydraflow Hydrographs Extension for Autodesk® Civil 3DB by Autodesk, Inc. v2024 Friday, 08 / 16 / 2024

Hyd. No. 1

PR-1

Hydrograph type	= SCS Runoff	Peak discharge	= 4.387 cfs
Storm frequency	= 100 yrs	Time to peak	= 721 min
Time interval	= 1 min	Hyd. volume	= 11,723 cuft
Drainage area	= 1.600 ac	Curve number	= 95*
Basin Slope	= 0.0 %	Hydraulic length	= 0 ft
Tc method	= User	Time of conc. (Tc)	= 12.00 min
Total precip.	= 2.59 in	Distribution	= Type II
Storm duration	= 24 hrs	Shape factor	= 484

* Composite (Area/CN) = [(0.310 x 85) + (1.290 x 98)] / 1.600

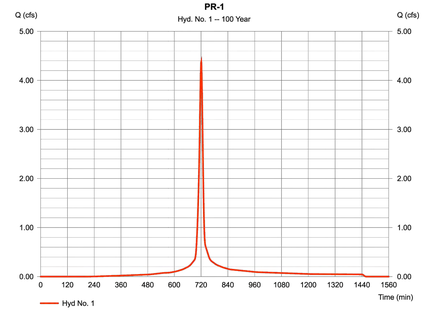

/ DRAINAGE, FLOOD CONTROL, AND EROSION CONTROL/

FIGURE 6.9.9 **Grate Capacities for Types " A," " C," and "D"**

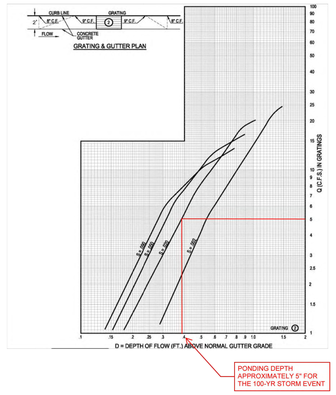

6-68 LAST PRINTED: JUNE 26, 2020

NORMAL OUTLET STRUCTURE

1

Hydrograph Summary Report

Hydraflow Hydrographs Extension for Autodesk® Civil 3DB by Autodesk, Inc. v2024

Hyd. No.	Hydrograph type (origin)	Peak flow (cfs)	Time interval (min)	Time to Peak (min)	Hyd. volume (cuft)	Inflow hyd(s)	Maximum elevation (ft)	Total strge used (cuft)	Hydrograph Description
1	SCS Runoff	4.387	1	721	11,723	-----	-----	-----	PR-1
2	Reservoir	2.901	1	727	11,720	1	5109.99	1,956	Detention Output

SCS Detention Calcs.gpw Return Period: 100 Year Friday, 08 / 16 / 2024

Hydrograph Report

NORMAL OUTLET STRUCTURE

1

Hydraflow Hydrographs Extension for Autodesk® Civil 3DB by Autodesk, Inc. v2024 Friday, 08 / 16 / 2024

Hyd. No. 2

Detention Output

Hydrograph type	= Reservoir	Peak discharge	= 2.901 cfs
Storm frequency	= 100 yrs	Time to peak	= 727 min
Time interval	= 1 min	Hyd. volume	= 11,720 cuft
Inflow hyd. No.	= 1 - PR-1	Max. Elevation	= 5109.99 ft
Reservoir name	= Detention Pond	Max. Storage	= 1,956 cuft

Storage Indication method used.

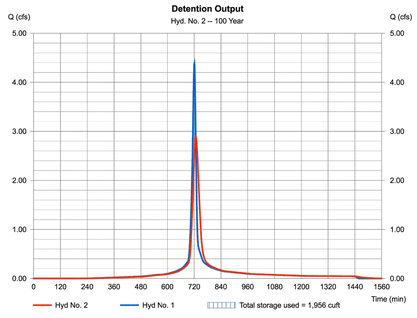

Pond Report

NORMAL OUTLET STRUCTURE

Hydraflow Hydrographs Extension for Autodesk® Civil 3DB by Autodesk, Inc. v2024 Friday, 08 / 16 / 2024

Pond No. 1 - Detention Pond

Pond Data

Contours -User-defined contour areas. Average end area method used for volume calculation. Begining Elevation = 5107.75 ft

Stage / Storage Table

Stage (ft)	Elevation (ft)	Contour area (sqft)	Incr. Storage (cuft)	Total storage (cuft)
0.00	5107.75	875	0	0
1.00	5108.75	875	875	875
2.00	5109.75	875	875	1,750
3.00	5110.75	875	875	2,625
3.45	5111.20	875	394	3,019

Culvert / Orifice Structures

	[A]	[B]	[C]	[PrfRsr]
Rise (in)	= 18.00	9.00	Inactive	Inactive
Span (in)	= 18.00	9.00	0.00	0.00
No. Barrels	= 1	1	0	0
Invert El. (ft)	= 5100.92	5107.75	0.00	0.00
Length (ft)	= 10.00	0.00	0.00	0.00
Slope (%)	= 0.50	0.00	0.00	n/a
N-Value	= .012	.013	.013	n/a
Orifice Coeff.	= 0.60	0.60	0.60	0.60
Multi-Stage	= n/a	Yes	No	No

Weir Structures

	[A]	[B]	[C]	[D]
Crest Len (ft)	= 5.00	Inactive	Inactive	Inactive
Crest El. (ft)	= 5110.70	0.00	0.00	0.00
Weir Coeff.	= 3.33	3.33	3.33	3.33
Weir Type	= Rect	---	---	---
Multi-Stage	= No	No	No	No

Exfil.(in/hr) = 0.000 (by Contour)

TW Elev. (ft) = 0.00

Note: Culvert/Orifice outflows are analyzed under inlet (ic) and outlet (oc) control. Weir risers checked for orifice conditions (ic) and submergence (s).

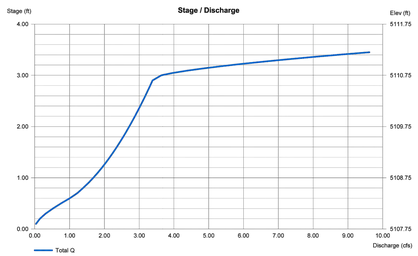

Roof Drain Calculations

Circular

Diameter (ft) = 0.50

Invert Elev (ft) = 5107.75

Slope (%) = 1.10

N-Value = 0.012

Section

Calculations

Compute by: Q vs Depth

No. Increments = 10

Highlighted

Depth (ft)	= 0.45
Q (cfs)	= 0.679
Area (sqft)	= 0.19
Velocity (ft/s)	= 3.65
Wetted Perim (ft)	= 1.25
Crit Depth, Yc (ft)	= 0.42
Top Width (ft)	= 0.30
EGL (ft)	= 0.66

City of Albuquerque
Planning Department
Development Review Services
HYDROLOGY SECTION
APPROVED
DATE: 08/30/24
BY:
HydroTrans # G11D067F

THE APPROVAL OF THESE PLANS/REPORT SHALL NOT BE CONSTRUED TO VIOLATE, CANCEL, OR SET ASIDE ANY ORDINANCE OR STATE LAW, AND SHALL NOT PREVENT THE CITY OF ALBUQUERQUE FROM REQUIRING CORRECTION OF ERRORS IN THE PLANS/REPORT, SPECIFICATIONS, OR CONSTRUCTION. SUCH APPROVED PLANS SHALL NOT BE CHANGED, MODIFIED OR ALTERED WITHOUT AUTHORIZATION.

APPROVAL OF GRADING & DRAINAGE PLAN(S) SHALL EXPIRE TWO (2) YEARS AFTER THE APPROAL DATE BY THE CITY IF NO BUILDING PERMIT HAS BEEN PULLED ON THE DEVELOPMENT.

INTRODUCTION AND PROJECT DESCRIPTION:

THE PROJECT SITE IS LOCATED TO THE SOUTH OF THE INTERSECTION OF ST JOSEPHS DRIVE NW AND COORS BOULEVARD NW ON THE WEST SIDE OF COORS BOULEVARD NW IN THE CITY OF ALBUQUERQUE, NM. THE SITE IS ZONED AND PLANNED FOR COMMERCIAL DEVELOPMENT, AND THE USE PROPOSED IS A RESTAURANT. THE SUBJECT PROPERTY (AS SHOWN HEREON) LIES WITHIN ZONE "X" (AREA OF MINIMAL FLOOD HAZARD) IN ACCORDANCE WITH THE NATIONAL FLOOD INSURANCE PROGRAM RATE MAP NO. 35001C0114 H, EFFECTIVE DATE 08-16-2012.

METHODOLOGY:

CHAPTER 6 OF THE COA DPM WAS UTILIZED TO CALCULATE THE PEAK FLOW FOR THE 100-YEAR, 24-HOUR STORM EVENT. THE SCS METHOD FOR THE 100-YEAR, 24-HOUR STORM EVENT WAS USED TO CALCULATE DETENTION VOLUMES.

EXISTING CONDITIONS:

THE SITE HISTORICALLY IS VACANT LAND. THE SITE HISTORICALLY SURFACE FLOWS TO THE SOUTHEAST CORNER OF THE SITE. THE DEVELOPER HAS DESIGNED AND IS INSTALLING A PRIVATE STORMWATER SYSTEM ON THE SITE (REFERENCE THE OXBOW CENTER ONSITE PLANS PRODUCED BY RESPEC). THE APPROVED SOUTHERN OXBOW MASTER DRAINAGE PLAN PROVIDED THE MAXIMUM DETENTION POND RELEASE RATE (2.90 CFS) FROM THE SITE ALONG WITH THE REQUIRED WATER QUAILITY VOLUME (2173.80 CUBIC FEET).

PROPOSED CONDITIONS:

THE PROJECT IMPROVEMENTS WILL INCLUDE INSTALLATION OF A RESTAURANT WITH CUSTOMER PARKING, SITE DRIVEWAYS, AND LANDSCAPE AREAS. THE PROPOSED DEVELOPMENT WILL INCREASE THE AMOUNT OF IMPERVIOUS COVER WHEN COMPARED TO THE EXISITNG CONDITIONS AND PROPOSES A DETENTION POND TO MITIGATE THE INCREASE IN RUNOFF THUS DECREASING THE PEAK DISCHARGE GENERATED BY THE SITE TO THE ALLOWABLE RATE PROVIDED IN THE APPROVED MASTER DRAINAGE PLAN. ADDITIONALLY, THE PROPOSED DETENTION POND HAS LOCATED IT'S OUTLET STRUCTURE 2.5 FEET ABOVE THE BOTTOM OF THE POND TO ALLOW FOR ADEQUATE WATER QUALITY VOLUME STORAGE.

CONCLUSIONS:

THE PROPOSED DEVELOPMENT WILL RELEASE RUNOFF FORM THE SITE AT THE ALLOWABLE RATE PROVIDED BY THE APPROVED MASTER DRAINAGE PLAN (ALLOWABLE RELEASE RATE = 2.90 CFS; PROVIDED RELEASE RATE = 2.90 CFS). ADDITIONALLY, THE PROPOSED DEVELOPMENT WILL PROVIDE WATER QUALITY VOLUME STORAGE AS PROVIDED IN THE APPROVED MASTER DRAINAGE PLAN (REQUIRED WATER QUALITY VOLUME = 2173.8 CUBIC FEE; PROVIDED WATER QUAILITY VOLUME = 2187.5 CUBIC FEET).

DRAINAGE ANALYSIS NOTES

1. STARTING HGL FOR STORM SEWER ANALYSIS WAS TAKEN FROM WATER QUAILITY/ DETENTION POND; RE: C7.3.
2. ALL PROPOSED TIMES OF CONCENTRATION WERE ASSUMED TO BE 12 MINUTES.
3. REQUIRED WATER QUAILTY VOLUME = 2173.8 CUBIC FEET
   PROVIDED WATER QUAILTY VOLUME = 2187.5 CUBIC FEET
   ALLOWABLE DETENTION POND RELEASE RATE = 2.90 CFS
   PROVIDED DETENTION POND RELEASE RATE = 2.90 CFS

   REQUIRED WATER QUAILTY VOLUME/ALLOWABLE DETENTION POND RELEASE RATE WHERE PROVIDED BY THE APPROVED SOUTHERN OXBOW CENTER MASTER DRAINAGE PLAN ON 1/26/24.

No.	REVISIONS	DATE	BY

Kimley»Horn

© 2024 KIMLEY-HORN AND ASSOCIATES, INC.
4727 GAILLARDIA PARKWAY, SUITE 250, OKLAHOMA CITY, OK 73142
PHONE: 405-241-5423
WWW.KIMLEY-HORN.COM

LAUREN A. NUFFER
NEW MEXICO
24254
PROFESSIONAL ENGINEER
08/19/2024

KHA PROJECT 063887193
DATE AUGUST 2024
SCALE AS SHOWN
DESIGNED BY JJK
DRAWN BY JCE
CHECKED BY LN

OLIVE GARDEN
3823 COORS BLVD. NW
ALBUQUERQUE, NM 87120

STORM CALCULATIONS

SHEET NUMBER
C7.4

This document, together with the concepts and designs presented herein, as an instrument of service, is intended only for the specific purpose and client for which it was prepared. Reuse of and improper reliance on this document without written authorization and adaptation by Kimley-Horn and Associates, Inc. shall be without liability to Kimley-Horn and Associates, Inc.

IMAGES: BOSC Drawn, Hydrotran Plot Canvas, NWS Radarge Tiles
WEBES: Radar Base Reflectivity, Radar Base Velocity, USGS Topo, NAIP
LAST SAVED: 8/20/2024, 2:47 PM
PLOTTED BY: Lauren A. Nuffer 8/20/2024 1:19 PM
DWG NAME: K:\OKC_Civil\063887193-OG Albuquerque\CAD\SHEETS\
LAYOUT: C7.4 STORM CALCULATIONS

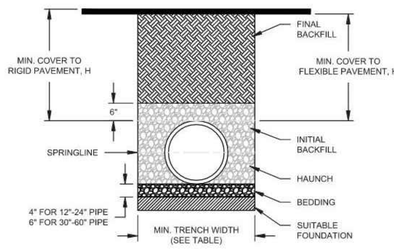

RECOMMENDED MINIMUM TRENCH WIDTHS

PIPE DIAM.	MIN. TRENCH WIDTH
4" (100mm)	21" (533mm)
6" (150mm)	23" (584mm)
8" (200mm)	26" (660mm)
10" (250mm)	28" (711mm)
12" (300mm)	30" (762mm)
15" (375mm)	34" (864mm)
18" (450mm)	39" (991mm)
24" (600mm)	48" (1219mm)
30" (750mm)	56" (1422mm)
36" (900mm)	64" (1626mm)
42" (1050mm)	72" (1829mm)
48" (1200mm)	80" (2032mm)
60" (1500mm)	96" (2438mm)

MINIMUM RECOMMENDED COVER BASED ON VEHICLE LOADING CONDITIONS**

PIPE DIAM.	SURFACE LIVE LOADING CONDITION	
	H-25	HEAVY CONSTRUCTION (75T AXLE LAOD) *
12" - 48" (300mm - 1200mm)	12" (305mm)	48" (1219mm)
60" (1500mm)	24" (610mm)	60" (1524mm)

* VEHICLES IN EXCESS OF 75T MAY REQUIRE ADDITIONAL COVER
**SEE BACKFILL REQUIREMENTS IN NOTE 6.

MAXIMUM RECOMMENDED COVER BASED ON VECHICLE LOADING CONDITIONS

PIPE DIAM.	CLASS I		CLASS II		CLASS III
	COMPACTED	DUMPED	95%	90%	95%
4" (100mm)	37 (11.3m)	18 (5.5m)	25 (7.6m)	18 (5.5m)	18 (5.5m)
6" (150mm)	44 (13.4m)	20 (6.1m)	29 (8.8m)	20 (6.1m)	21 (6.4m)
8" (200mm)	32 (9.8m)	15 (4.6m)	22 (6.7m)	15 (4.6m)	16 (4.9m)
10" (250mm)	38 (11.6m)	18 (5.5m)	26 (7.9m)	18 (5.5m)	18 (5.5m)
12" (300mm)	35 (10.7m)	17 (5.2m)	24 (7.3m)	17 (5.2m)	17 (5.2m)
15" (375mm)	38 (11.6m)	17 (5.2m)	25 (7.6m)	17 (5.2m)	18 (5.5m)
18" (450mm)	36 (11.0m)	17 (5.2m)	24 (7.3m)	17 (5.2m)	17 (5.2m)
24" (600mm)	28 (8.5m)	13 (4.0m)	20 (6.1m)	13 (4.0m)	14 (4.3m)
30" (750mm)	28 (8.5m)	13 (4.0m)	20 (6.1m)	13 (4.0m)	14 (4.3m)
36" (900mm)	26 (7.9m)	12 (3.7m)	18 (5.5m)	13 (4.0m)	13 (4.0m)
42" (1050mm)	23 (7.0m)	11 (3.4m)	16 (4.9m)	11 (3.4m)	11 (3.4m)
48" (1200mm)	25 (7.6m)	11 (3.4m)	17 (5.2m)	11 (3.4m)	12 (3.7m)
60" (1500mm)	25 (7.6m)	11 (3.4m)	17 (5.2m)	11 (3.4m)	12 (3.7m)

FILL HEIGHT TABLE GENERATED USING AASHTO SECTION 12, LOAD RESISTANCE FACTOR DESIGN (LRFD) PROCEDURE WITH THE FOLLOWING ASSUMPTIONS:
NO HYDROSTATIC PRESSURE,
UNIT WEIGHT OF SOIL (Ys) = 120 PCF

NOTES:

1. ALL PIPE SYSTEMS SHALL BE INSTALLED IN ACCORDANCE WITH ASTM D2321, "STANDARD PRACTICE FOR UNDERGROUND INSTALLATION OF THERMOPLASTIC PIPE FOR SEWERS AND OTHER GRAVITY FLOW APPLICATIONS", LATEST ADDITION

2. MEASURES SHOULD BE TAKEN TO PREVENT MIGRATION OF NATIVE FINES INTO BACKFILL MATERIAL, WHEN REQUIRED.

3. FOUNDATION: WHERE THE TRENCH BOTTOM IS UNSTABLE, THE CONTRACTOR SHALL EXCAVATE TO A DEPTH REQUIRED BY THE ENGINEER AND REPLACE WITH SUITABLE MATERIAL AS SPECIFIED BY THE ENGINEER. AS AN ALTERNATIVE AND AT THE DISCRETION OF THE DESIGN ENGINEER, THE TRENCH BOTTOM MAY BE STABILIZED USING A GEOTEXTILE MATERIAL.

4. BEDDING: SUITABLE MATERIAL SHALL BE CLASS I, II OR III. THE CONTRACTOR SHALL PROVIDE DOCUMENTATION FOR MATERIAL SPECIFICATION TO ENGINEER. UNLESS OTHERWISE NOTED BY THE ENGINEER, MINIMUM BEDDING THICKNESS SHALL BE 4" (100mm) FOR 4"-24" (100mm-600mm); 6" (150mm) FOR 30"-60" (750mm-1500mm).

5. INITIAL BACKFILL: SUITABLE MATERIAL SHALL BE CLASS I, II OR III IN THE PIPE ZONE EXTENDING NOT LESS THAN 6" ABOVE CROWN OF PIPE. THE CONTRACTOR SHALL PROVIDE DOCUMENTATION FOR MATERIAL SPECIFICATION TO ENGINEER. MATERIAL SHALL BE INSTALLED AS REQUIRED IN ASTM D2321, LATEST EDITION.

6. MINIMUM COVER: MINIMUM COVER, H, IN NON-TRAFFIC APPLICATIONS (GRASS OR LANDSCAPE AREAS) IS 12" FROM THE TOP OF PIPE TO GROUND SURFACE. ADDITIONAL COVER MAY BE REQUIRED TO PREVENT FLOTATION. FOR TRAFFIC APPLICATIONS, MINIMUM COVER, H, IS 12" UP TO 48" DIAMETER PIPE AND 24" OF COVER FOR 60" DIAMETER PIPE, MEASURED FROM TOP OF PIPE TO BOTTOM OF FLEXIBLE PAVEMENT OR TO TOP OF RIGID PAVEMENT. FOR TRAFFIC APPLICATIONS WITH LESS THAN FOUR FEET OF COVER, EMBEDMENT OF THE PIPE SHALL BE USING ONLY A CLASS I OR CLASS II BACKFILL.

© 2016 ADS, INC.

ADVANCED DRAINAGE SYSTEMS, INC. ("ADS") HAS PREPARED THIS DETAIL BASED ON INFORMATION PROVIDED TO ADS. THIS DRAWING IS INTENDED TO DEPICT THE COMPONENTS AS REQUESTED. ADS HAS NOT PERFORMED ANY ENGINEERING OR DESIGN SERVICES FOR THIS PROJECT. NOR HAS ADS INDEPENDENTLY VERIFIED THE INFORMATION SUPPLIED. THE INSTALLATION DETAILS PROVIDED HEREIN ARE GENERAL RECOMMENDATIONS AND ARE NOT SPECIFIC FOR THIS PROJECT. THE DESIGN ENGINEER SHALL REVIEW THESE DETAILS PRIOR TO CONSTRUCTION. IT IS THE DESIGN ENGINEERS RESPONSIBILITY TO ENSURE THE DETAILS PROVIDED HEREIN MEETS OR EXCEEDS THE APPLICABLE NATIONAL, STATE, OR LOCAL REQUIREMENTS AND TO ENSURE THAT THE DETAILS PROVIDED HEREIN ARE ACCEPTABLE FOR THIS PROJECT.

REV	DESCRIPTION	BY	MM/DD/YY	CHK'D
	COVER HEIGHTS TO MATCH TN 2.01	AGC	09/28/17	CMF

TRENCH INSTALLATION DETAIL (N-12 PER AASHTO)

DRAWING NUMBER: STD-101

ADS® ADVANCED DRAINAGE SYSTEMS, INC. 4640 TRUEMAN BLVD HILLIARD, OHIO 43026

DRAWN BY: TJR
DATE: 12/29/16
SCALE: NTS
SHEET: 1 OF 1

HDPE TRENCH DETAIL
N.T.S.

NOTES:

1. ALL INITIAL BACKFILL AND BEDDING SHALL BE #67 STONE ACCORDING TO ASTM D-448 COMPACTED TO 95% PER ASTM D-698.

2. FINAL BACKFILL UNDER PAVEMENT SHALL BE #67 STONE ACCORDING TO ASTM D-448 COMPACTED TO 95% PER ASTM D-698.

3. FINAL BACKFILL UNDER NON-PAVED AREAS AND SIDEWALKS SHALL BE SATISFACTORY SOIL COMPACTED TO 95% PER ASTM D-698.

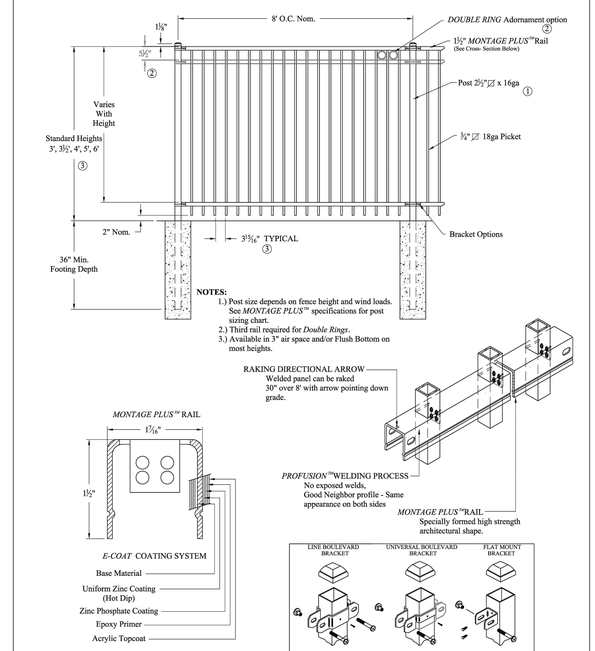

NOTES:
1.) Post size depends on fence height and wind loads. See MONTAGE PLUS™ specifications for post sizing chart.
2.) Third rail required for Double Rings.
3.) Available in 3" air space and/or Flush Bottom on most heights.

COMMERCIAL STRENGTH WELDED STEEL PANEL
PRE-ASSEMBLED

Values shown are nominal and not to be used for installation purposes. See product specification for installation requirements.
1RMISC

MONTAGE PLUS MAJESTIC 2/3-RAIL

DR: CI	SH . 1of 1	SCALE: DO NOT SCALE
CK: ME	Date 6/28/10	REV: e

AMERISTAR® 1555 N. Mingo Tulsa, OK 74116 1-888-333-3422 www.ameristarfence.com

NOTES:

1. FENCING SHALL BE 3.5 FEET IN HEIGHT AND THREE RAIL.

2. CONTRACTOR SHALL SUBMIT FENCING SYSTEM PRODUCT INFORMATION AND SHOP DRAWINGS TO ENGINEER FOR REVIEW PRIOR TO INSTALLATION.

3. FENCING SHALL BE SURFACE MOUNTED TO RETAINING WALL AND INSTALLED PER MANUFACTURER'S INSTRUCTIONS.

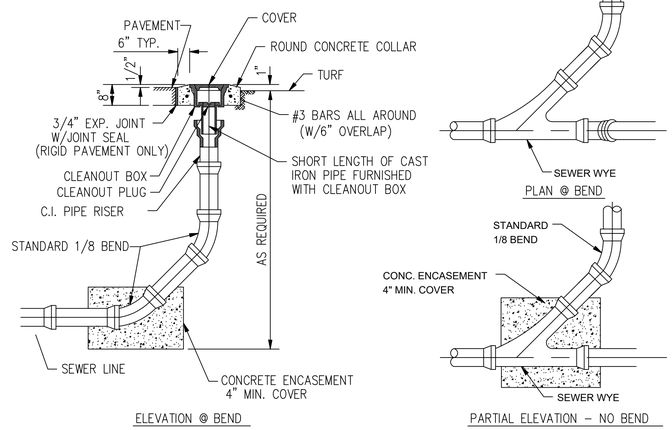

STORM SEWER CLEAN OUT
N.T.S

NOTES:

1. WHERE A CLEANOUT IS LOCATED ON A WYE LARGER THAN 6 INCHES, A 4-INCH OR 6-INCH PVC REDUCER SHALL BE USED TO TRANSITION FROM THE STORM SEWER PIPE TO THE CLEANOUT

2. WHEN LOCATED WITHIN PAVEMENT, A HEAVY-DUTY, TRAFFIC-RATED COVER/CLEANOUT BOX SHALL BE USED.

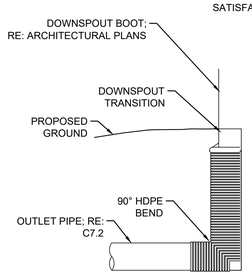

ROOF DRAIN/DOWNSPOUT CONNECTION DETAIL
N.T.S.

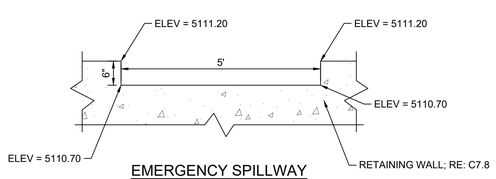

EMERGENCY SPILLWAY
N.T.S

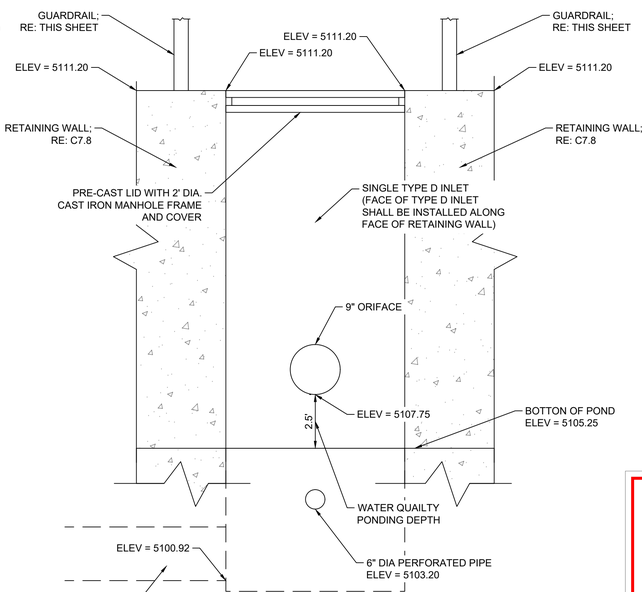

DETENTION OUTLET STRUCTURE
N.T.S

City of Albuquerque
Planning Department
Development Review Services
HYDROLOGY SECTION
APPROVED
08/30/24
DATE:
BY: René C. Brissette
HydroTrans # G11D067F

THE APPROVAL OF THESE PLANS/REPORT SHALL NOT BE CONSTRUED TO VIOLATE, INVALIDATE, OR WAIVE ANY ORDINANCE OR STATE LAW, AND SHALL NOT PREVENT THE CITY OF ALBUQUERQUE FROM REQUIRING CORRECTION OF ERRORS IN THE PLANS/REPORT, SPECIFICATIONS, OR CONSTRUCTION, SUCH APPROVED PLANS SHALL NOT BE CHANGED, MODIFIED OR ALTERED WITHOUT AUTHORIZATION.

APPROVAL OF GRADING & DRAINAGE PLAN(S) SHALL EXPIRE TWO (2) YEARS AFTER THE APPROAL DATE BY THE CITY IF NO BUILDING PERMIT HAS BEEN PULLED ON THE DEVELOPMENT.

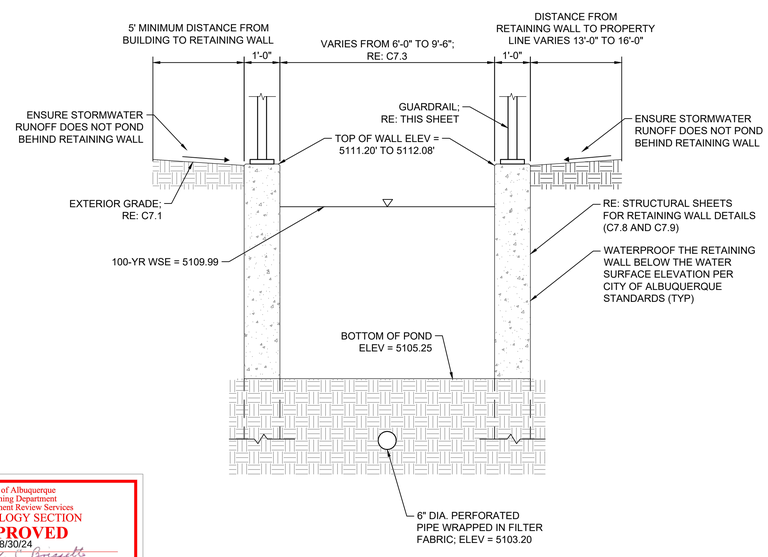

DETENTION POND SECTION
N.T.S

No.	REVISIONS	DATE	BY

Kimley»Horn

© 2024 KIMLEY-HORN AND ASSOCIATES, INC.
4727 GAILLARDIA PARKWAY, SUITE 250, OKLAHOMA CITY, OK 73142
PHONE: 405-241-5423
WWW.KIMLEY-HORN.COM

LAUREN A. NUFFER
NEW MEXICO
24254
PROFESSIONAL ENGINEER
08/19/2024

KHA PROJECT 063887193
DATE AUGUST 2024
SCALE AS SHOWN
DESIGNED BY JJK
DRAWN BY JCE
CHECKED BY LN

OLIVE GARDEN
3823 COORS BLVD. NW
ALBUQUERQUE, NM 87120

GRADING AND DRAINAGE DETAILS 1

SHEET NUMBER
C7.5

This document, together with the concepts and designs presented herein, as an instrument of service, is intended only for the specific purpose and client for which it was prepared. Reuse of and improper reliance on this document without written authorization and adaptation by Kimley-Horn and Associates, Inc. shall be without liability to Kimley-Horn and Associates, Inc.

IMAGES
XREFS:
LAST SAVED BY
LAST PLOTTED
DWG NAME
LAYOUT NAME

EXIT Cross Detail - NMB11_Rev6.dgn_Test
dbolte (Hach)
8/29/2024, 1:34 PM
8/29/2024 4:02 PM
K:\OKC_CIVIL\063887193-OLIVEGARDEN\CAD\PLANSHEETS
C7.5 GRADING AND DRAINAGE DETAILS 1 (C7.5 GRADING AND DRAINAGE DETAILS 1)