HYDROLOGY G13/D4 ONE PLAN

G 13 - D4

1 PLAN

November 3, 1980

Subhas K. Shah, P.E.
Middle Rio Grande
Conservancy District
1930 Second Street, S.W.
Albuquerque, New Mexico 87103

Dear Mr. Shah:

In order to obtain approval on the drainage report for the Baca Subdivision, the City hydrologist has asked us to secure the Conservancy District's permission to do the following:

> We intend to allow minor sheet flow from the westerly one-half of the three lots bordering the Griego Drain's right-of-way to enter into the drain's right-of-way. At no point would the flows be concentrated and it is doubtful if they would ever reach the ditch. As a matter of fact, this subdivision would allow considerably less runoff to enter onto your property than what presently runs off in the site's undeveloped state. The site drainage plan is attached for your review of our request.

If you have no adverse comments concerning our request, we would appreciate your signature in the space provided below.

Thank you.

Sincerely,

Fred C. Arfman

Fred C. Arfman, P.E.
Associate Vice President

FCA:df

Attachment

_____
Middle Rio Grande Conservancy District

_____
Date

Chambers, Campbell, Isaacson, Chaplin, Inc.
architects engineers planners 3500 indian school road ne albuquerque new mexico 87106 505-266-5521

November 17, 1980

Subhas K. Shah, P.E.
Middle Rio Grande Conservancy District
1930 Second St. SW
Albuquerque, New Mexico 87103

REFERENCE: Baca Subdivision

Dear Mr. Shah:

On November 13, 1980, I had a follow-up meeting with Mr. Conegliano concerning the drainage study for the Baca Subdivision. Mr. Conegliano insisted that a drainage outfall be provided to drain the community pond located in the center of the subdivision. After studying the area's storm drain system, Mr. Conegliano would not allow any additional flows to enter into the storm sewers in Candelaria since they are already overtaxed. What he proposes is a 4" CMP from the pond's low point to the Griegos Drain. Design shall be coordinated with the Middle Rio Grande Conservancy District to insure the existence of a maintenance free system.

We feel that the cooperation of the District is essential in order for this project to proceed. Secondly, to reiterate a previously mentioned point, even if a system could be designed that would allow the storm waters to enter into Candelaria's storm drains; those storm sewers empty into the Griego Drain at a point 320 feet south of our proposed location (see attachment).

Please take a close look at our plan, for it is our last resort for getting a solution to our drainage plan.

Thank you.

Fred C. Arfman

Fred C. Arfman, P.E.
Associate Vice President

FCA:ja

Enclosure

Chambers, Campbell, Isaacson, Chaplin, Inc.
architects engineers planners 3500 indian school road ne albuquerque new mexico 87106 505-266-5621

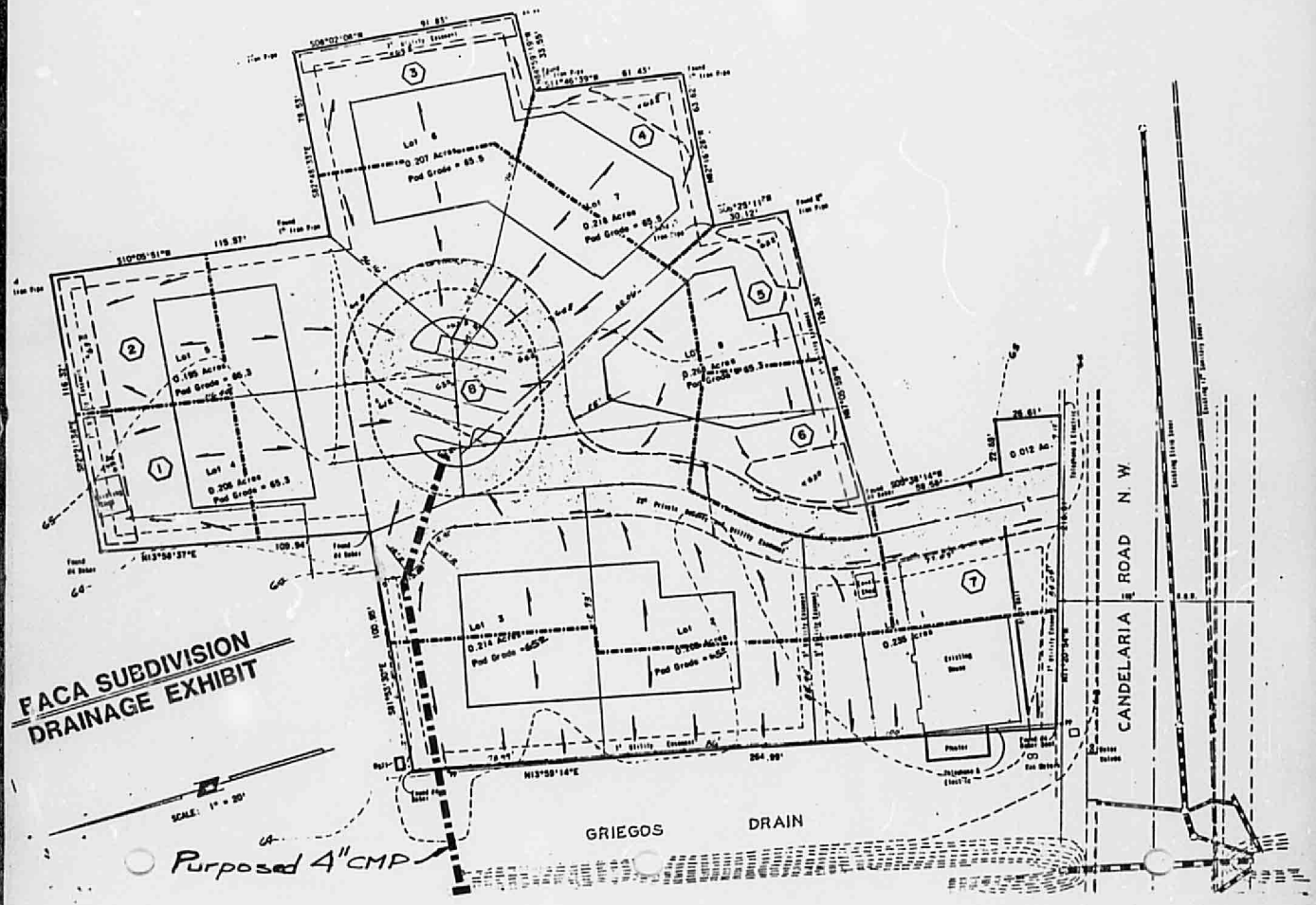
FACA SUBDIVISION
DRAINAGE EXHIBIT
SCALE: 1" = 20'
Purposed 4" CMP
GRIEGOS DRAIN
CANDELARIA ROAD N.W.
Lot 1
Lot 2
Lot 3
Lot 4
Lot 5
Lot 6
Lot 7
Lot 8
Pad Grade = 65.5
Pad Grade = 65.3
Existing House
Photo

MIDDLE RIO GRANDE CONSERVANCY DISTRICT
POST OFFICE BOX 581
1930 SECOND ST., S.W. PHONE 243-6796
ALBUQUERQUE, NEW MEXICO 87103

November 20, 1980

Mr. Fred C. Arfman
Chambers, Campbell, Isaacson,
Chaplin, Inc.
3500 Indian School Rd. NE
Albuquerque, NM 87106

Re: Baca Subdivision

Dear Fred:

We have received drainage plan for the Baca Subdivision. Your plan calls for a 4" Ø CMP drain inlet into the Griegos Drain. The District is much concerned with the number of drain inlets discharging into our system. The drain inlets present problems to the maintenance system. Grease trap structures will be necessary if the surface runoff from the paved area is encountered.

The District concurs with the concept of drainage study as proposed for the subdivision. Please furnish detail drawings for our review and comments.

Sincerely,

Subhas K. Shah
District Engineer

SKS:cj

cc: R. S. Nanninga, General Manager

RECEIVED
NOV 1980
C.C.I.C.

RECEIVED
DEC 02 1980
CITY ENGINEER

November 26, 1980

Mr. Bruno Conegliano
Muncipal Developemnt Department
City of Albuquerque
Post Office Box 1293
Albuquerque, New Mexico 87103

REFERENCE: Baca Subdivision

Dear Mr. Conegliano:

At your request, I have securred permission from the Middle Rio Grande Conservancy District that allows for the construction of a 4" C.M.P. that would empty the community detention pond. Refer to the CCIC letter of November 17, 1980. In Mr. Shah's second paragraph, he grants us permission to let minor sheet flows to enter onto the District's R.O.W. Please refer to our letter of November 3, 1980.

Consider this correspondence and its attachment as addenda to our previously submitted drainage report. Since we have now satisfied your requests and attained the proper approval from the district, I therefore request that you approve this drainage report so that we may proceed with the engineering plans.

Thank you,

Sincerely,

Fred C. Arfman

Fred C. Arfman,
Associate Vice President

FCA:ja

Enclosure

Chambers, Campbell, Isaacson, Chaplin, Inc.
architects engineers planners 3500 indian school road ne albuquerque new mexico 87106 505/266-5521

City of Albuquerque
P.O. BOX 1293 ALBUQUERQUE, NEW MEXICO 87103

December 12, 1980

Mr. Fred Arfman
Isaacson - Arfman, P.A.
2727 San Pedro Drive N.E.
Suite 114A
Albuquerque, New Mexico 87110

G13-D4

Reference: Baca Subdivision

Dear Mr. Arfman:

This letter is a reply to your letter dated November 26, 1980 which includes the concurrence of Mr. Shah with MRGCD on your drainage plan for the referenced subdivision. This letter is therefore written to express my approval to the drainage plan proposed.

Very truly yours,

B. Conegliano

Bruno Conegliano
Assistant Hydrology Engineer

BC/fs

cc - R. S. Heller
Drainage File

DRAINAGE STUDY

FOR

BACA SUBDIVISION

FRED C. ARFMAN
NEW MEXICO
7322
REGISTERED PROFESSIONAL ENGINEER

Prepared by:

Chambers, Campbell, Isaacson, Chaplin, Inc.
3500 Indian School Road, N.E.
Albuquerque, New Mexico 87106

JUNE 1980

RECEIVED
JUN 30 1980
CITY ENGINEER

INTRODUCTION

At the request of Billy Baca, Owner of the Baca Subdivision, CCIC has investigated the storm drainage characteristics for the site. This investigation addresses itself to the subject property in its undeveloped condition and analyses the internal flows in its developed state with recommendations for compliance to the City of Albuquerque's and AMAFCA's requirements.

Careful attention has been given to how the proposed storm water runoff will act in conjunction with overall site and still satisfy all requirement for storm water retention. No concentrated flows shall be allowed to leave the subdivision.

SITE LOCATION AND TOPOGRAPHY

Baca Subdivision is located in Albuquerque's North Valley area. More precisely, the site has north frontage on Candelaria Road and borders the M.R.G.C.D.'s Griego Drain on the west. Between the site and the actual drain is approximately 40 feet of service road. There shall be no direct access from this service road to the subdivision. Main access is off of Candelaria Road, adjacent to the existing house's backyard.

Ground topography is typical of the valley area; very flat with irregular contour patterns. The overall site consists of eight lots comprising 1.8 acres, that is covered with pasture grasses and a few trees. The soils are of a valley clay and silt loam variety. The water table has a projected depth of 15 feet.

Location Map

DESIGN CRITERIA

Engineering Parameters: For the calculation of composite coefficients of runoff, the following values of "C" were taken for the indicated land coverages:

(a)	impervious pavement, patios, roofs	0.90
(b)	landscaped areas	0.20
(c)	natural ground	0.25

In addition, all runoff volume calculations have been based on a 100-year-6-hour rainfall of 2.2" as per AMAFCA requirements. Because of the site's low acreage and the fact that all storm water runoff must be retained on site, no "rate(Q)" calculation shall be presented as part of this study.

Flood Control Regulations: The drainage plan presented in this report has been designed to comply with the Interim Drainage Guidelines, November 1979.

In particular, paragraph 6 of Part (B): Ponding. This paragraph stated that ponds shall have a volume equivalent to the 50-year developed runoff volume with Q, positive discharge. An overflow must be provided. This is intended as a minimum requirement and shall be treated as such; for we intend to retain the 100-year volume with no overflow considerations.

COMPUTATIONAL PROCEDURES

Hydrological calculations are based on the rational runoff method. Estimates were made in percents of area covered by each coverage type described in the above section for each drainage sub-area.

Volume calculations for sizing individual backyard ponds shall be based on a percentage of area to be ponded for each lot. Determination of the net volumes of discharge for the entire site in both natural and developed states were performed by multiplication of the applicable "C" factor times the 100-year 6-hour rainfall (0.183) times the appropriate area to obtain cubic feet of water.

OFFSITE DRAINAGE

Baca Subdivision is situated in Albuquerque's North Valley area and has no apparent drainage flow patterns. From our site investigation, it was determined that the site accepts no offsite flows from the surrounding pasture and residential lands.

ONSITE DRAINAGE

Exhibit I delineates the internal patterns of drainage of the site. Even though it is understood that backyard ponding is not a requirement to meet with the current City and AMAFCA regulations, it is still desirable on certain lots to have these ponds in order to have a more workable and realistic grading plan.

Storm water from the private access easements and the front yards will pond in the private drainage easements which are platted so that a single large community pond is utilized.

Developed Drainage Conditions: Grading for this subdivision shall be done in such a way as to meet the following conditions:

1. Lots shall be graded to provide backyard ponding where indicated (Exhibit I).
2. All pads shall conform to the natural topography as much as possible.
3. Allow the storm water runoff to sheet flow off of the site from the backs of the western most lots.
4. Build-up the pad from the excavation from the community ponding area.
5. The southerly 80' of the gravel road shall be allowed to exit onto Candelaria and into the storm drain system.

RECOMMENDATIONS

1. Site shall be graded to insure that offsite flows not be allowed to enter into the subdivision.
2. The private access/drainage easement be constructed of a gravel section over compacted subgrade. This gravel section shall have a minimum of a 3" crown (see Appendix).
3. The community visitor parking area shall also be used as a community pond which shall have the capacity to retain the 100-year-6-hour storm volume.

4. Rear yard ponding will require a minimum percentage of land area. These individual rear yard ponds are sized and shown on Exhibit I. Typical computations are shown in the Appendix. Ponds should be no deeper than 0.5'. The limits of the pond waters should be kept a minimum distance of 3 feet away from walls and 10 feet away from any house foundation. These general recommendations are only intended to call the developer's attention to potential settlement problems in the area. A qualified soils engineer should prepare specific guidelines for ponding water around structures.
5. Because of lot #8's irregular and large dimensions (Exhibit I), a pond should be located on the southern tip and should have a common border with the access easement. Flows from the north side of the private access easement may enter into this pond as well as sheet flows from that portion of lot #8. Depth of pond should not exceed 0.5'.

CONCLUSION

All storm water runoff generated from this site shall remain onsite except for the western halfs of lots 1, 2 , 3 and the southern 50' of gravel road. These three lots shall be allowed to have the flows leave naturally into the M.R.G.C.D. right-of-way in the form of sheet flows. The remaining volume shall be retained in a centralized community pond within a private drainage easement.

This drainage report is intented to be consistent with the "Interim Drainage Guidelines", November 1979.

A P P E N D I X

Composite "C" Calculations

Community Pond Calculations

Rear Yard Ponding Calculations

Gravel Road Section

COMPOSITE "C" CALCULATIONS

Refer to Area A (area contributing to community pond)

Step #1: Determine Area subject to runoff =

Step #2: Determine Hard Surface Area =

(a) Streets & Walks:

Streets are gravel; therefore pervious walks @ 120 S.F. per unit = 840 S.F.

(b) Driveway:

Length (20') x width (18') = 360 S.F.
360 S.F. x No. of Units = 2,520 S.F.

(c) Roofs: Typical Roof - 35 x 40

Ponded lots - 1/2 roof drains to street area of roof x No. of Units
(55' x 20') x 7 = 7,700 S.F.

(d) Total Hard Surface Area = 11,060 S.F.

Step #3: Determine gravel road area. Exclude area designated for visitor parking/ponding. (14,840 - 2320) = 12,520 S.F.

Step #4: Determine Composite "C"

$0.90 \left(\frac{11,060}{44,830}\right) = 0.222$

$0.40 \left(\frac{12,520}{44,830}\right) = 0.111$

$0.20 \left(\frac{21,250}{44,830}\right) = 0.095$

0.43

COMMUNITY POND CALCULATION

Determine volume of water that must be ponded in the community parking/ponding area.

Drainage Area A:

Area = 44,830 S.F.

= 1.03 acre

C = 0.43

D = 2.2 in.

Vol = CDA = $(0.42)(\frac{2.2}{12})(44,830)$

Vol = 3,530 S.F.

Comments: Flows shall enter into the ponding area in the form of sheet flows. Primary ponding area is designated by the eight parking spots plus the two planters. For total ponding of a 100-year-6-hour storm, the pond limits shall extend into the gravel circle drive but not out of the access easement.

REAR YARD POND CALCULATIONS

Refer to Exhibit #1.

LOT	TOTAL AREA	COMP "C"	VOL. OF RUNOFF	POND SIZE (Q=0.5)
1	See Note #1			
2	See Note #2			
3	See Note #2			
4	3,760 S.F.	0.43	295 C.F.	11 x 53
5	3,800 S.F.	0.43	300 C.F.	11 x 53
6	4,870 S.F.	0.41	365 C.F.	8 x 90
7	4,170 S.F.	0.45	345 C.F.	35 x 35 x 0.5
8	2,900 S.F.	0.50	265 S.F.	20 x 30

NOTES:

1. Existing house-storm water runoff sheet flows into M.R.G.C.D. right-of-way or ponds onsite.

2. Proposed dwelling units, backyard flows shall be allowed to exit site in form of sheet flows. Runoff is minimal.

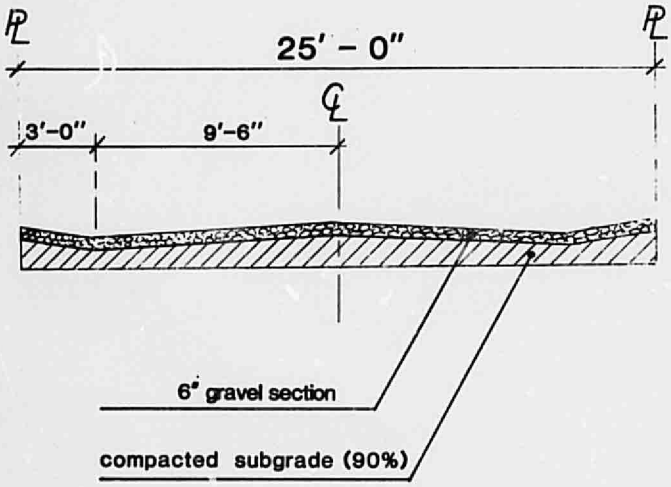

PRIVATE ROAD SECTION

1 8 4 0