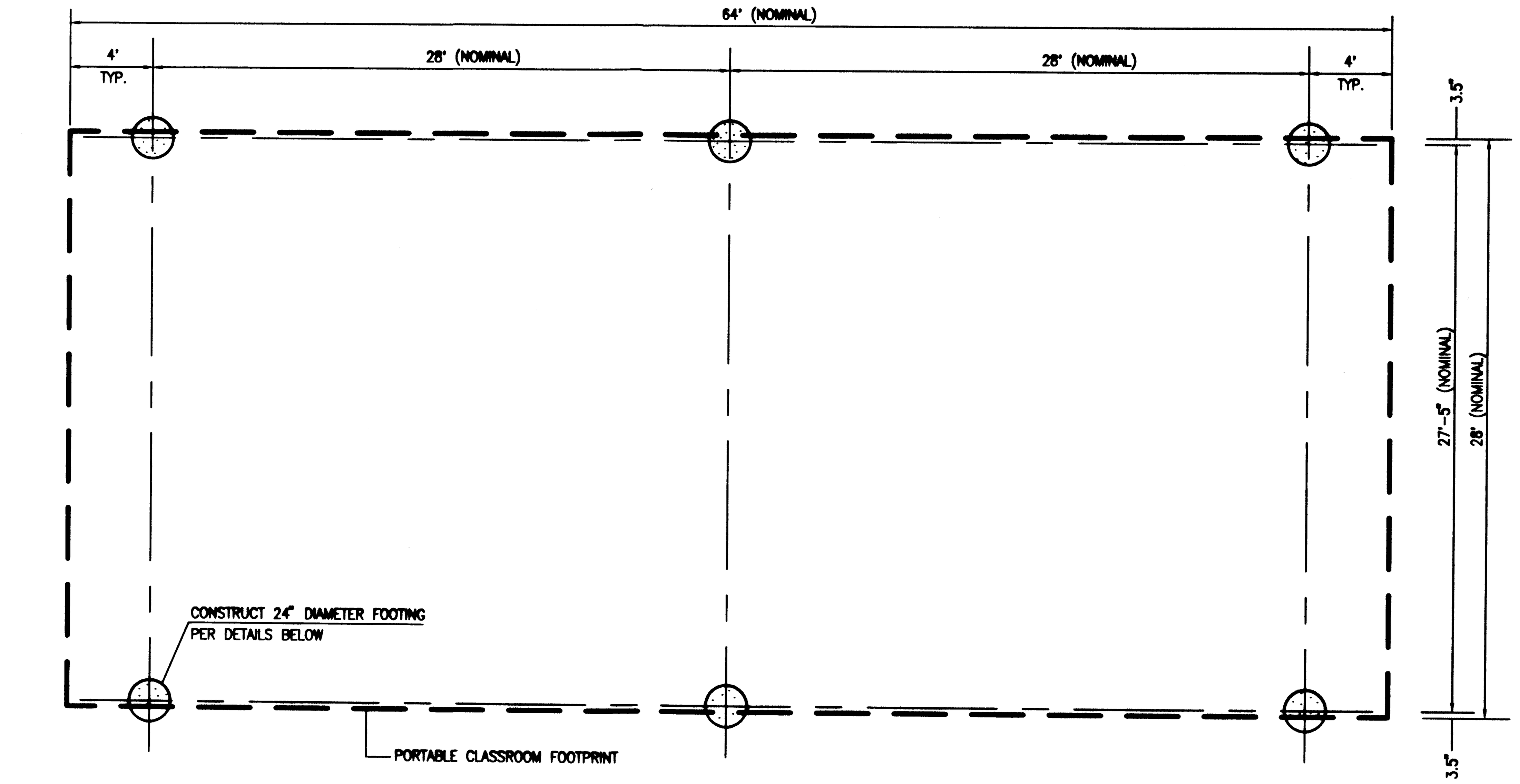

(C1) DOUBLE PORTABLE CLASSROOM FOUNDATION PLAN
SCALE: 1" = 5' - 0"

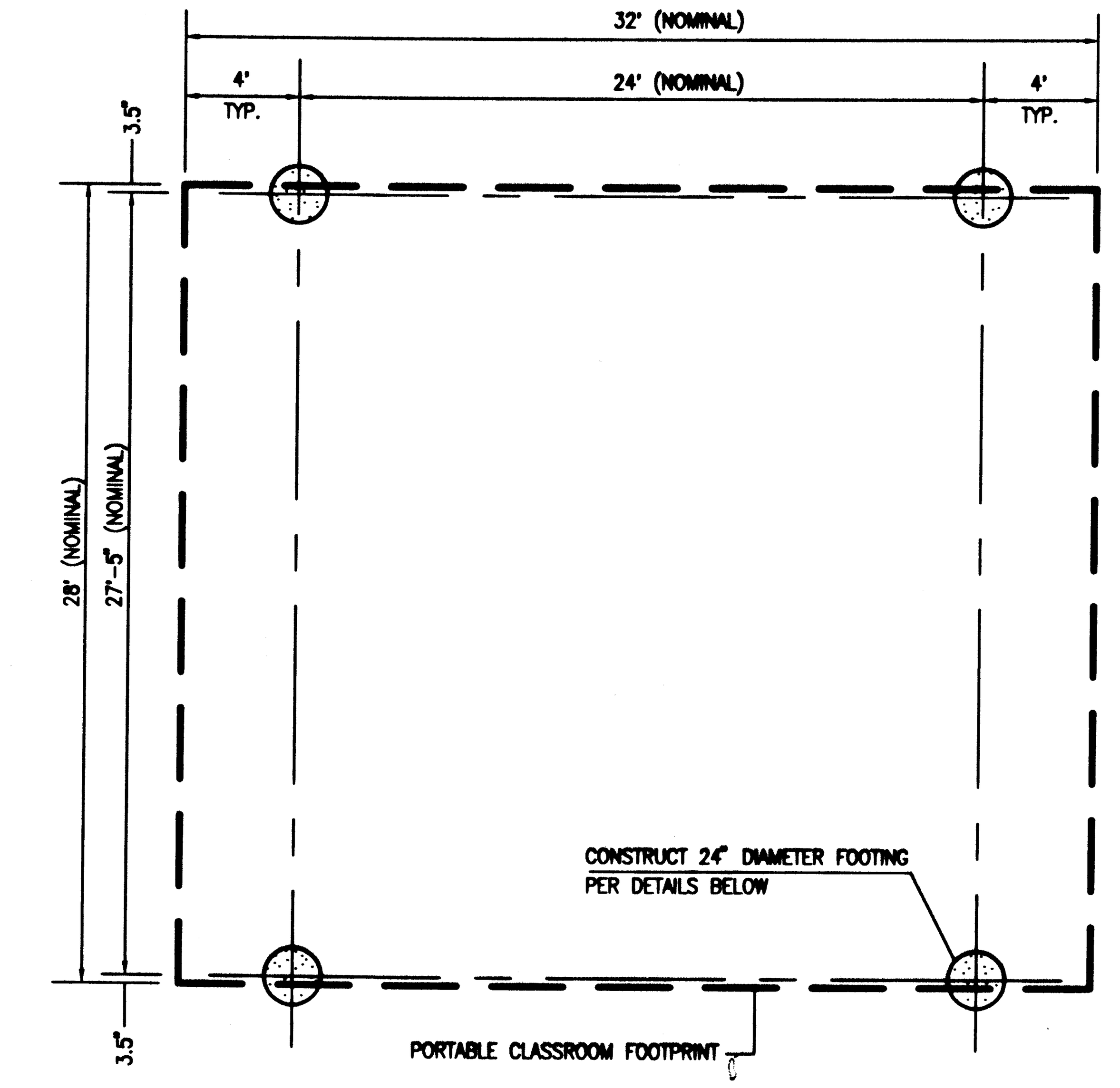

(C4) SINGLE PORTABLE CLASSROOM FOUNDATION PLAN
SCALE: 1" = 5' - 0"

FOUNDATION AND PORTABLE INSTALLATION NOTES:

1. FOUNDATION LOCATIONS SHALL BE STAKED BY THE PROJECT SURVEYOR UNDER CONTRACT WITH THE OWNER.
2. THE CONTRACTOR SHALL NOTIFY THE ENGINEER WHEN FOUNDATIONS HAVE BEEN EXCAVATED AND ALL FORMS SET.
3. PRIOR TO POURING FOUNDATIONS, THE ENGINEER, OR HIS REPRESENTATIVE, SHALL OBSERVE AND APPROVE THE WORK FOR COMPLIANCE WITH THE PLANS AND SPECIFICATIONS.
4. THE ENGINEER, OR HIS REPRESENTATIVE, SHALL BE PRESENT TO OBSERVE THE POURING OF CONCRETE WITHIN THE FOUNDATION FORMS.
5. UPON COMPLETION OF CONSTRUCTION OF THE FOUNDATIONS, THE PROJECT SURVEYOR SHALL OBTAIN AS-BUILT MEASUREMENTS FOR THE HORIZONTAL AND VERTICAL LOCATIONS OF EACH FOUNDATION.
6. PRIOR TO INSTALLATION OF THE PORTABLE CLASSROOM BUILDINGS, THE ENGINEER SHALL REVIEW THE AS-BUILT SURVEY DATA AND PREPARE A FOUNDATION CERTIFICATION. PORTABLE BUILDINGS SHALL NOT BE INSTALLED WITHOUT THE CONSENT OF THE ENGINEER.
7. A PRE-INSTALLATION MEETING SHALL BE CONDUCTED PRIOR TO INSTALLATION OF THE PORTABLE CLASSROOM BUILDINGS TO DETERMINE THE CRITERIA FOR ALIGNING EACH BUILDING WITH RESPECT TO THE AS-CONSTRUCTED FOUNDATION LOCATIONS. ANY BUILDING INSTALLED IN ADVANCE OF A PRE-INSTALLATION MEETING SHALL BE ADJUSTED TO THE SATISFACTION OF THE OWNER AND THE ENGINEER AT NO ADDITIONAL COST TO THE OWNER.

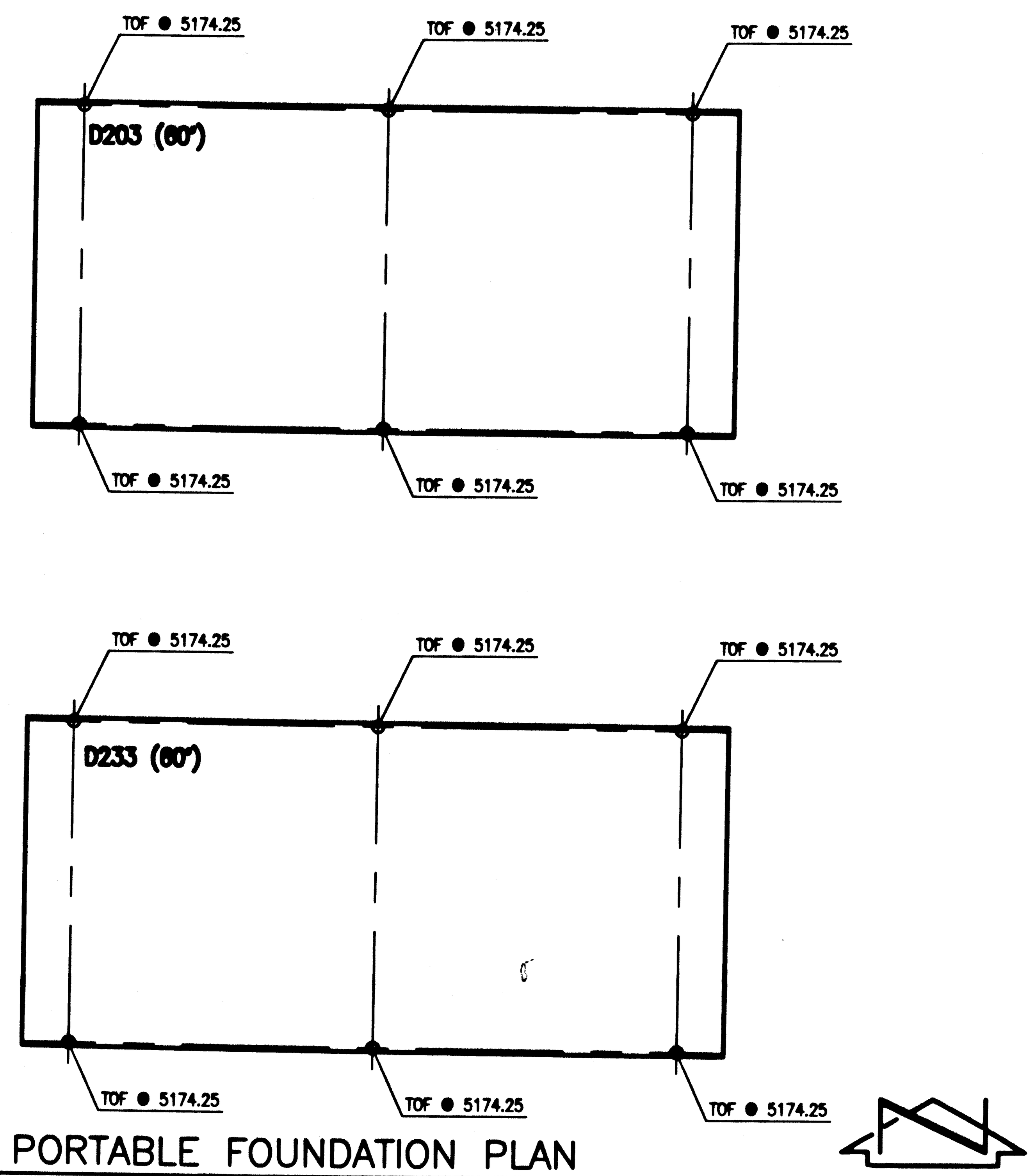

(A4) PORTABLE FOUNDATION PLAN
SCALE: 1" = 10'-0"

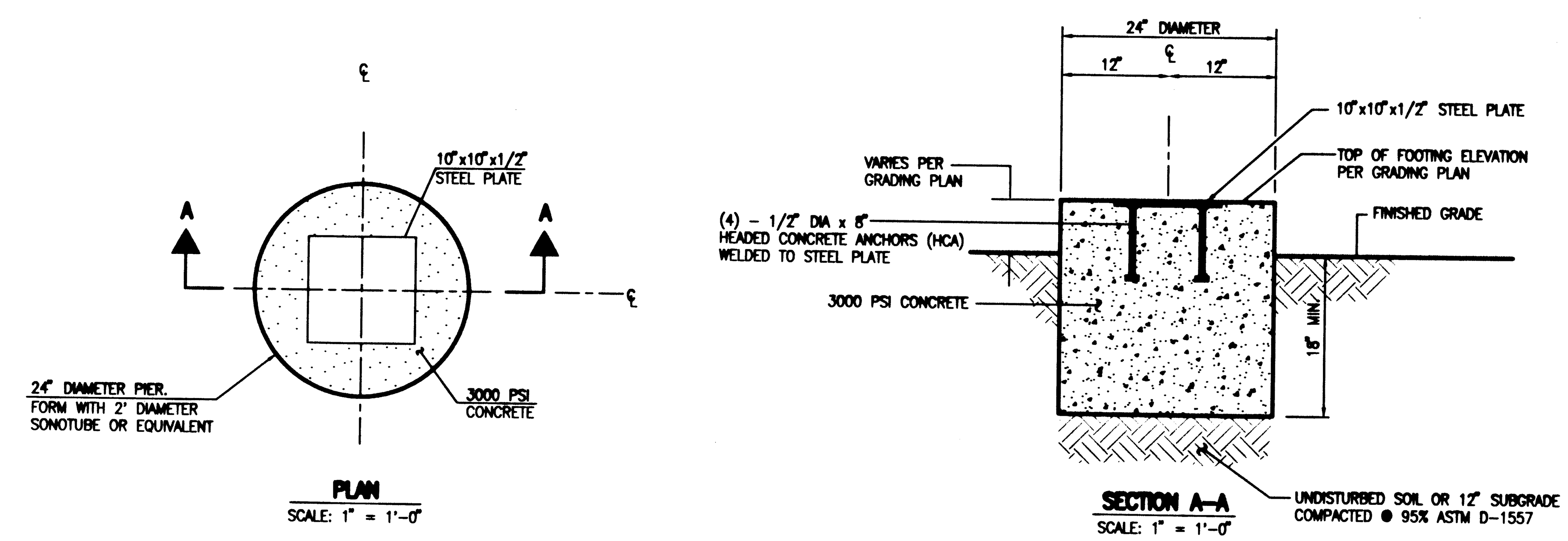

(A1) FOOTING DETAILS
SCALE: 1" = 1'-0"

RECEIVED SEP 7 2011 HYDROLOGY SECTION

09-02-2011

JEFFREY G. MORTENSEN, NEW MEXICO, 8547, REGISTERED PROFESSIONAL ENGINEER

File Path: E:\DATA\2011.180.2\ENG | Plot Date: 09-01-2011
File Name: 111802_SH10.DWG | Plot Time: 4:57 pm

HIGH MESA Consulting Group
6010-B MIDWAY PARK BLVD. NE • ALBUQUERQUE, NEW MEXICO 87109
PHONE: 505.345.4250 • FAX: 505.345.4254 • www.highmesacg.com

TYPICAL APS PORTABLE CLASSROOM FOUNDATION PLAN
P.A.P.A. CHARTER SCHOOL AT BEL AIR ELEMENTARY SCHOOL
3000 ADAMS NE

DESIGNED BY	J.G.M.
DRAWN BY	J.Y.R.
APPROVED BY	J.G.M.

NO.	DATE	BY	

JOB NO.	2011.180.2
DATE	08-2011
SHEET	10 OF 11

617/D39A

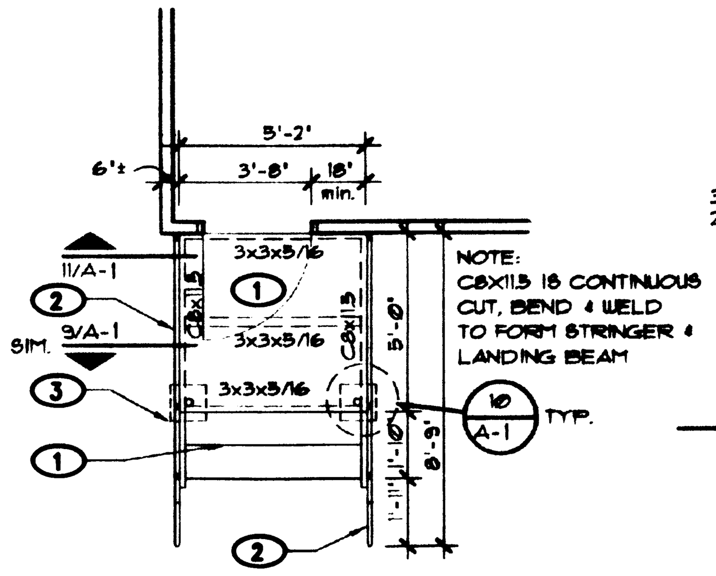

1 STAIR ONLY PLAN
SCALE: 1/4"=1'-0"

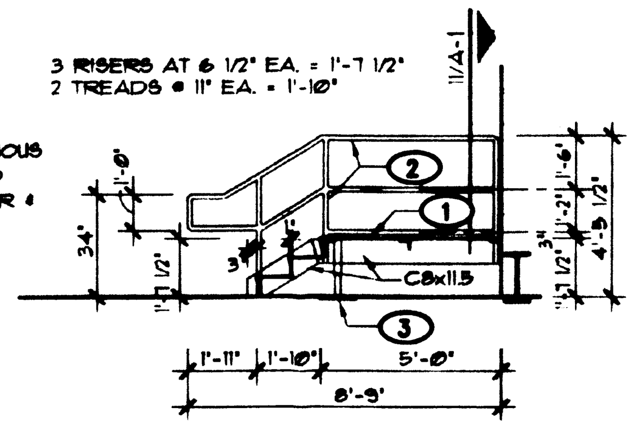

2 STAIR ELEVATION
SCALE: 1/4"=1'-0"

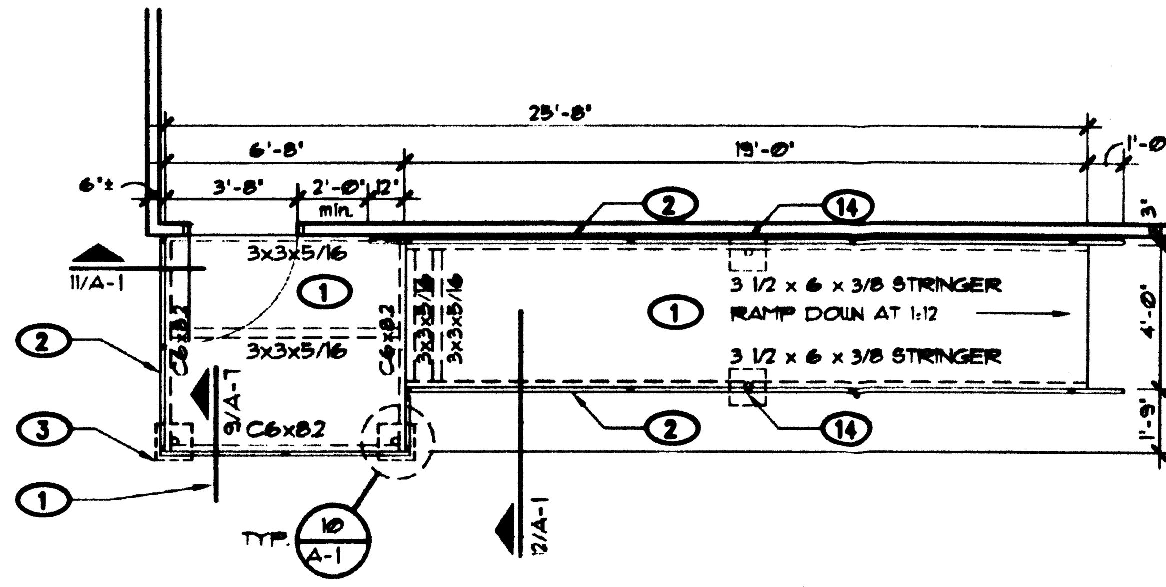

3 TYPICAL RAMP ONLY PLAN
SCALE: 1/4"=1'-0"

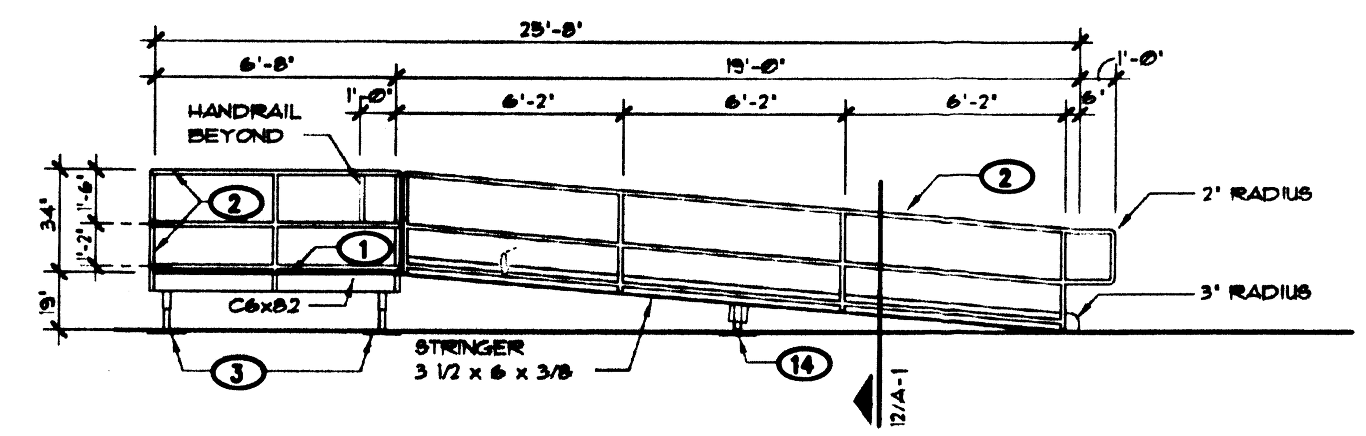

4 TYPICAL RAMP ELEVATION
SCALE: 1/4"=1'-0"

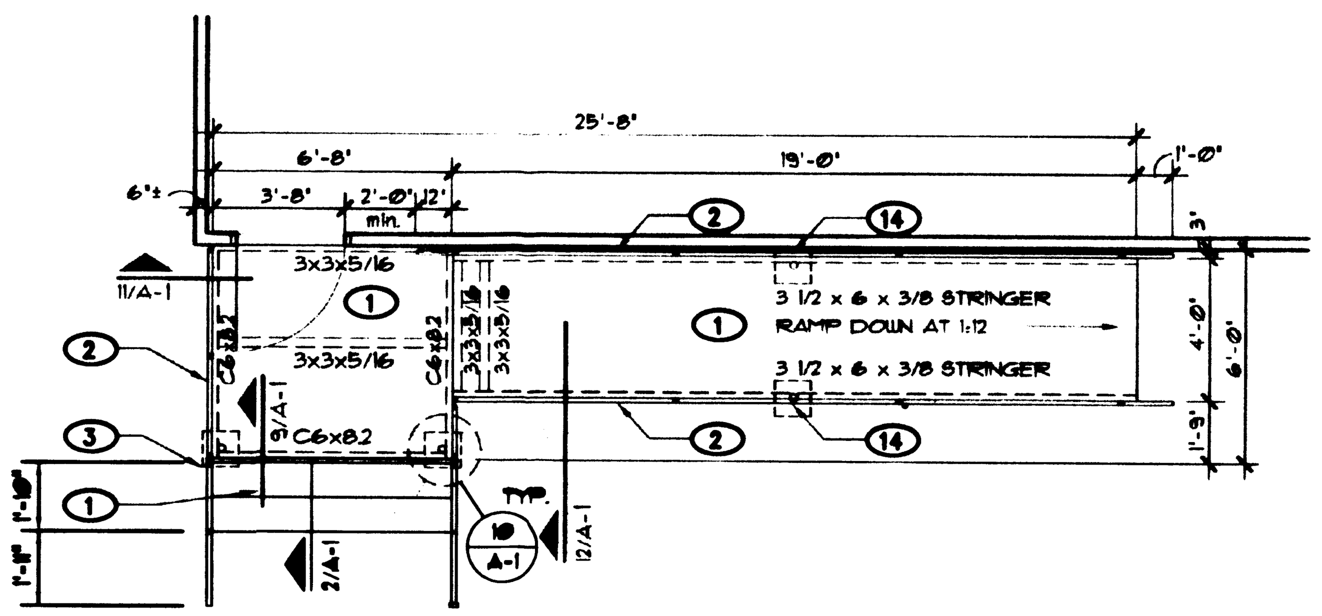

5 TYPICAL RAMP W/STAIR PLAN
SCALE: 1/4"=1'-0"

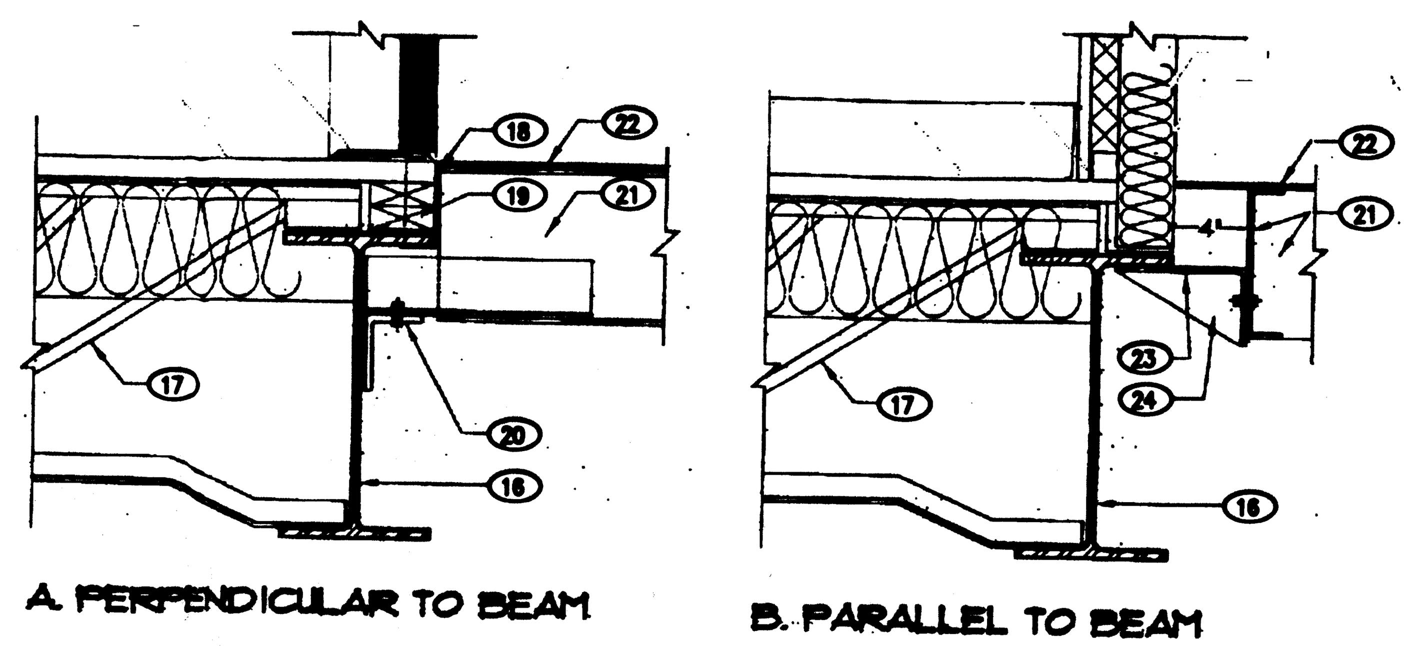

8 LANDING ATTACHMENT
SCALE: 1 1/2"=1'-0"

NOTE: PROVIDE 1' LONG SECTIONS OF 2" O.D. STANDARD PIPE AS REQUIRED FOR PIPE LEG HEIGHT ADJUSTMENT

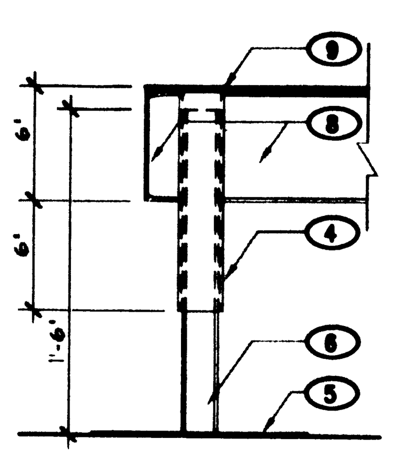

9 ELEVATION ADJUSTABLE LANDING
SCALE: 1 1/2"=1'-0"

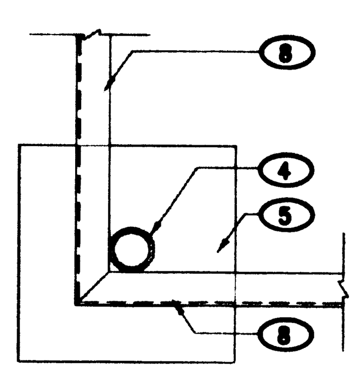

10 PLAN VIEW ADJUSTABLE LANDING
SCALE: 1 1/2"=1'-0"

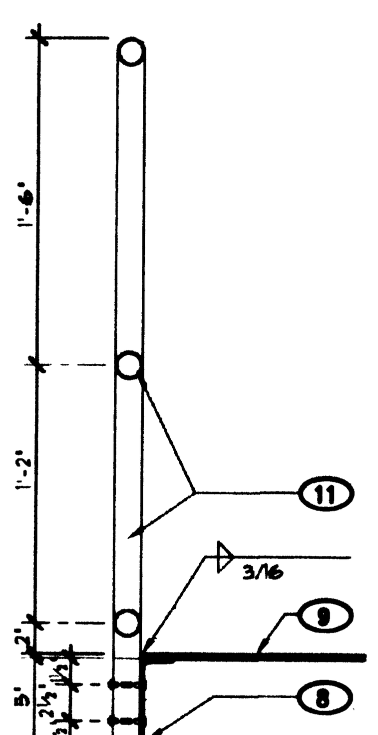

11 LANDING HANDRAIL CONNECTION
SCALE: 1 1/2"=1'-0"

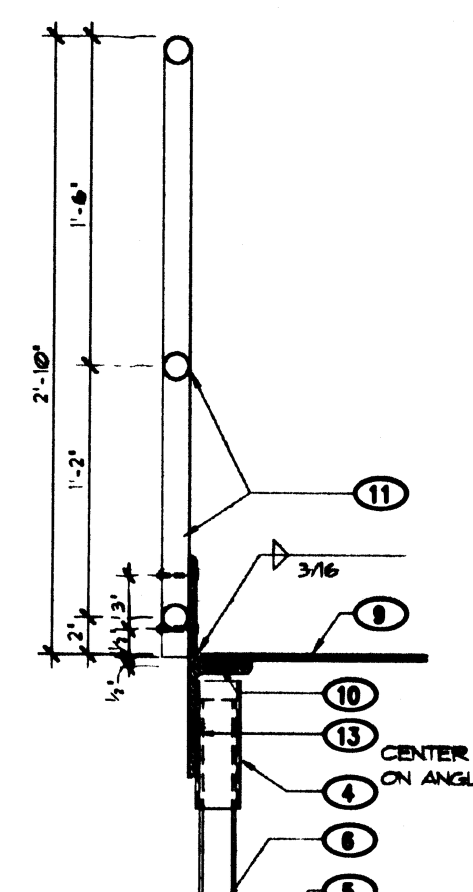

12 RAMP HANDRAIL CONNECTION
SCALE: 1 1/2"=1'-0"

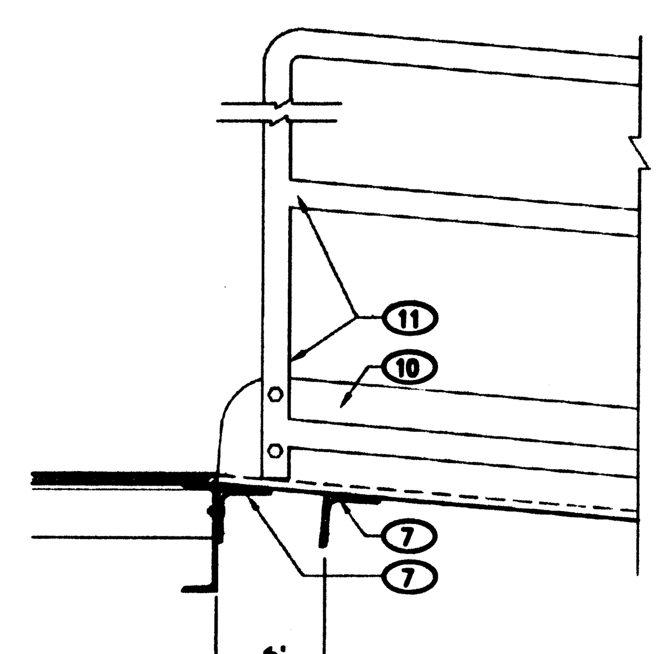

13 RAMP CONNECTION
SCALE: 1 1/2"=1'-0"

KEYED NOTES

1. 1/4" CHECKERED PLATE STEEL
2. 1 1/2" O.D. STEEL PIPE HAND RAIL AND POSTS, BOLT W/ (2) 3/8" DIA. THRU BOLTS AT EA. VERTICAL PIPE
3. ADJUST LANDING SUPPORT, SEE DETAILS 9 AND 10/A-1
4. 2 1/2" O.D. STEEL PIPE SLEEVE, WELD TO CHANNELS
5. 12"x12"x3/8" BASE PLATE
6. 2" O.D. STEEL PIPE
7. STEEL ANGEL 3"x3"x5/16"
8. STEEL CHANNEL, SEE FRAMING PLAN FOR SIZE
9. 1/4" THICK STEEL CHECKERED PLATE
10. STEEL ANGLE STRINGER, 3 1/2"x6"x3/8"
11. 1 1/2" O.D. STEEL PIPE HANDRAIL AND POSTS, BOLT W/ (2) 3/8" DIA. THRU BOLTS AT EA. VERTICAL PIPE
12. ATTACH LANDING TO BLDG. GIRT, SEE DETAIL 8/A-1
13. STEEL ANGEL 3 1/2"x6"x3/8"x6" LONG
14. ADJUSTABLE LANDING SUPPORT, SEE DETAILS 12/A-1
15. (NOT USED)
16. STEEL BEAM, W-16x40
17. STEEL BAR JOIST
18. SILL FLASHING
19. WOOD BLOCKING
20. STEEL ANGLE 4"x3"x3/8"x8' LONG, WELD ANGLE TO W16x40 W/ ONE 5/8" DIA. BOLT
21. STEEL CHANNEL
22. 1/4" THICK STEEL CHECKERED PLATE
23. 7"x4"x3/8"x8' LONG STEEL ANGLE, WELD TO W16x40 AND ATTACH TO CHANNEL W/ TWO 5/8" DIA. BOLTS, ONE EACH SIDE OF STIFFENER PLATE
24. 3/8" STIFFENER PLATE, WELD TO ANGLE

HIGH MESA Consulting Group
6010-B MIDWAY PARK BLVD. NE
ALBUQUERQUE, NEW MEXICO 87109
PHONE: 505.345.4250 FAX: 505.345.4254
www.highmesacg.com

09-02-2011

TYPICAL APS PORTABLE CLASSROOM RAMPS & STAIRS
P.A.P.A. CHARTER SCHOOL AT BEL AIR ELEMENTARY SCHOOL
3000 ADAMS NE

NO.	DATE	BY	REVISIONS

PROJECT No.	2011.180.2
DESIGNED BY	J.G.M.
DRAWN BY	J.Y.R.
APPROVED BY	J.G.M.

SHEET TITLE
TYPICAL APS PORTABLE CLASSROOM RAMPS & STAIRS

A-1
SHEET 11 OF 11

File Path: E:\DATA\2011.180.2\ENG\	Plot Date: 09-01-2011
File Name: 111802_SH11.DWG	Plot Time: 5:13 pm

DRAINAGE PLAN

I. INTRODUCTION AND EXECUTIVE SUMMARY

THIS PROJECT, LOCATED AT THE NORTHEAST CORNER OF CANDELARIA ROAD NE AND ADAMS STREET NE, REPRESENTS A MODIFICATION TO AN EXISTING SITE WITHIN AN INFILL AREA. IT IS PROPOSED TO EXPAND AN EXISTING PORTABLE PARK AT THE NORTHWEST CORNER OF THE BEL-AIR ELEMENTARY SCHOOL CAMPUS WITHIN BASINS 7, 12A, AND 12B OF THE 1999 APPROVED MASTER DRAINAGE PLAN. THE PROPOSED DRAINAGE CONCEPT IS TO MAINTAIN THE FREE DISCHARGE OF RUNOFF FROM THIS PORTION OF THE SITE TO ADAMS STREET NE AND THE HAHN ARROYO.

THE SUBMITTAL IS MADE TO DOCUMENT COMPLIANCE WITH THE 1999 APPROVED MDP AND TO DOCUMENT COMPLETION OF THIS PROJECT (I.E. DRAINAGE FILE UPDATE) FOR THE PORTABLE PARK CHARTER SCHOOL AT BEL AIR ELEMENTARY SCHOOL.

II. PROJECT DESCRIPTION

AS SHOWN BY THE VICINITY MAP, THE BEL-AIR ELEMENTARY SCHOOL SITE IS LOCATED AT THE NORTHEAST CORNER OF CANDELARIA ROAD NE AND ADAMS STREET NE. THE PROJECT AREA IS LOCATED AT THE NORTHWEST CORNER OF THE SCHOOL SITE, ALONG ADAMS STREET NE. THE CURRENT LEGAL DESCRIPTION IS TRACTS H AND J, BEL-AIR ELEMENTARY SCHOOL, ALBUQUERQUE, NEW MEXICO. AS SHOWN BY PANEL 351 & 352 OF 825 OF THE NATIONAL FLOOD INSURANCE PROGRAM FLOOD INSURANCE RATE MAPS PUBLISHED BY FEMA FOR BERNALILLO COUNTY, NEW MEXICO, SEPTEMBER 26, 2008, THIS SITE DOES NOT LIE WITHIN A DESIGNATED FLOOD HAZARD ZONE. A PORTION OF THE OVERALL SITE DRAINS TO THE DESIGNATED FLOOD HAZARD (AO) ZONE CONTAINED WITHIN CANDELARIA ROAD NE. THIS PROJECT, HOWEVER, WILL NOT CONTRIBUTE RUNOFF TO THE FLOOD HAZARD ZONE AND INSTEAD DISCHARGES TO ADAMS STREET, FLOWING NORTH TO ULTIMATELY ENTER THE HAHN ARROYO.

III. BACKGROUND DOCUMENTS & RESEARCH

REVIEW OF THE FOLLOWING WERE USED IN THE PREPARATION OF THIS SUBMITTAL:

A. BOUNDARY AND TOPOGRAPHIC SURVEY PREPARED BY HIGH MESA CONSULTING GROUP (FORMERLY JEFF MORTENSEN & ASSOCIATES, INC.), NMPS NO. 11184, DATED APRIL 16, 2007 . THE SURVEY SHOWS THE EXISTING CONDITION OF THE SITE.

B. MASTER DRAINAGE PLAN PREPARED BY SMITH ENGINEERING COMPANY FOR THE BEL-AIR ELEMENTARY SCHOOL, DATED NOVEMBER 1, 1999. THE PLAN DEFINES THE EXISTING BASINS OF THE SCHOOL SITE, WITH AHYMO CALCULATIONS FOR EACH BASIN SHOWING THE MAJORITY OF THE SCHOOL SITE ROUTING RUNOFF WEST INTO ADAMS STREET NE, MINIMIZING CONTRIBUTING FLOWS TO THE FLOOD HAZARD ZONE WITHIN CANDELARIA ROAD NE. THIS PROJECT AFFECTS BASINS 7, 12A AND 12B, ALL OF WHICH ARE ALLOWED THE FREE DISCHARGE OF DEVELOPED RUNOFF TO ADAMS STREET NE; FROM THIS POINT THE RUNOFF FLOWS NORTH TO ULTIMATELY OUTFALL TO THE HAHN ARROYO.

C. DRAINAGE PLAN PREPARED BY HIGH MESA CONSULTING GROUP (FORMERLY JEFF MORTENSEN & ASSOCIATES, INC.) FOR THE BEL-AIR ELEMENTARY SCHOOL, DATED JUNE 12, 1996. THE PLAN SET FORTH THE REQUIREMENT FOR SITE DEVELOPMENT TO DRAIN WEST INTO ADAMS STREET IN ORDER TO REDUCE CONTRIBUTING RUNOFF INTO THE FLOOD HAZARD ZONE WITHIN CANDELARIA ROAD NE. AN EXISTING DETENTION POND WAS CONSTRUCTED PER THE 1996 PLAN TO ATTENUATE THE PEAK DISCHARGE RATE ENTERING ADAMS STREET NE AND THE FLOOD HAZARD ZONE IN CANDELARIA ROAD NE FROM THE SCHOOL SITE.

IV. EXISTING CONDITIONS

THE BEL-AIR SITE IS CHARACTERIZED BY 12 DRAINAGE BASINS (1 THROUGH 12B). THIS SPECIFIC PROJECT LIES PRIMARILY WITHIN BASINS 7, 12A AND 12B. IN THE EXISTING CONDITION, BASINS 7, 12A AND 12B FREE DISCHARGE TO ADAMS STREET NE. FROM THIS POINT, THE RUNOFF FLOWS NORTH WITHIN ADAMS STREET NE, A FULLY DEVELOPED CITY STREET, TO ULTIMATELY DISCHARGE TO THE HAHN ARROYO, A PUBLIC DRAINAGE CHANNEL.

THE PROJECT SITE IS CURRENTLY DEVELOPED WITH PORTABLE CLASSROOM BUILDINGS AND PAVED PARKING. THE ADDITIONAL AREAS BEING DEVELOPED CONSIST OF BARE GROUND COVER, WITH SOME PAVED ACCESS WALKWAYS. STORMWATER RUNOFF CURRENTLY SURFACE DRAINS FROM EAST TO WEST, DISCHARGING THROUGH THE PARKING LOT DRIVEPADS INTO ADAMS STREET NE, WHERE IT DRAINS NORTH WITH ULTIMATE OUTFALL TO THE HAHN ARROYO.

OFFSITE FLOWS DO NOT ENTER THE PROJECT SITE. AN EXISTING CONCRETE RETAINING WALL ALONG THE NORTH AND EAST PROPERTY LIMITS OF THE OVERALL SCHOOL SITE PREVENT POTENTIAL FLOWS FROM ENTERING. THE PUBLIC STREETS OF ADAMS STREET NE TO THE WEST AND CANDELARIA ROAD NE TO THE SOUTH ARE TOPOGRAPHICALLY LOWER THAN THE SITE AND HENCE DO NOT CONTRIBUTE RUNOFF.

V. DEVELOPED CONDITIONS

PROPOSED CONSTRUCTION WITHIN THE PROJECT SITE WILL CONSIST OF THE ADDITION OF NINE (9) SINGLE PORTABLE CLASSROOM BUILDINGS AND FOUR (4) DOUBLE PORTABLE CLASSROOM BUILDINGS, AS WELL AS A PAVED PARKING LOT AND ASPHALT PAVED WALKWAYS. THE NEW CONSTRUCTION WILL MAINTAIN THE EXISTING DRAINAGE PATTERNS FOR THE SITE, SURFACE DRAINING FROM EAST TO WEST INTO ADAMS STREET NE VIA THE TWO EXISTING DRIVEPADS AT THE NORTHWEST CORNER OF THE SITE, FLOWING NORTH WITHIN ADAMS STREET NE TO ULTIMATELY OUTFALL TO THE HAHN ARROYO.

THERE WILL BE A MINOR INCREASE IN IMPERVIOUS AREA DUE TO THE PROPOSED DEVELOPMENT, RESULTING IN A MINOR INCREASE IN RUNOFF VOLUME AND PEAK DISCHARGE RATE FROM THE PROJECT SITE.

VI. GRADING PLAN

THE GRADING PLAN SHOWS: 1) EXISTING GRADES INDICATED BY SPOT ELEVATIONS AND CONTOURS AT 1'-0" INTERVALS AS TAKEN FROM TOPOGRAPHIC SURVEY PREPARED BY THIS OFFICE AND DATED APRIL 16, 2007, 2) PROPOSED GRADES INDICATED BY SPOT ELEVATIONS AND CONTOURS AT 1'-0" INTERVALS, 3) THE LIMIT AND CHARACTER OF EXISTING IMPROVEMENTS, AND 4) CONTINUITY BETWEEN EXISTING AND PROPOSED GRADES.

VII. CALCULATIONS

CALCULATIONS ANALYZING THE EXISTING AND DEVELOPED CONDITIONS FOR THE 100-YEAR, 6-HOUR RAINFALL EVENT HAVE BEEN PREPARED FOR THIS PROJECT SITE ONLY. THE PROCEDURE FOR 40 ACRE AND SMALLER BASINS, AS SET FORTH IN THE REVISION OF SECTION 22.2, HYDROLOGY OF THE DEVELOPMENT PROCESS MANUAL, VOLUME 2, DESIGN CRITERIA, DATED JANUARY, 1993, HAS BEEN USED TO QUANTIFY THE PEAK RATE OF DISCHARGE AND VOLUME OF RUNOFF GENERATED. AS SHOWN BY THE RESULTS PRESENTED HEREON, THERE WILL BE A MINOR INCREASE IN RUNOFF VOLUME AND PEAK RATE OF DISCHARGE GENERATED BY THIS PROJECT.

VIII. CONCLUSIONS

THE EXISTING DRAINAGE CONDITIONS OF THE SITE ARE MAINTAINED DUE TO THE FOLLOWING:

1. THIS PROJECT LIES WITHIN BASINS 7, 12A AND 12B AS DEFINED BY THE 1999 APPROVED MDP FOR THIS SITE.
2. THESE BASINS ARE ALLOWED FREE DISCHARGE IN ACCORDANCE WITH THE 1999 APPROVED MDP.
3. THIS PROJECT IS IN COMPLIANCE AND CONSISTENT WITH THE 1999 APPROVED MDP.
4. THE STORM WATER RUNOFF VOLUME AND PEAK RATE OF DISCHARGE GENERATED WITHIN THE PROJECT SITE WILL EXPERIENCE A MINOR INCREASE AS A RESULT OF THE PROPOSED IMPROVEMENTS.
5. THE PROPOSED IMPROVEMENTS WILL MAINTAIN THE EXISTING DRAINAGE PATTERNS OF THE SITE.
6. THE PROPOSED IMPROVEMENTS DO NOT LIE WITHIN A DESIGNATED FLOOD HAZARD AREA AND WILL NOT IMPACT THE FLOOD HAZARD ZONE WITHIN CANDELARIA ROAD NE.
7. THE PROPOSED IMPROVEMENTS WILL HAVE NO ADVERSE IMPACT ON DOWNSTREAM CAPACITY OR DOWNSTREAM PROPERTIES.

CALCULATIONS

I. SITE CHARACTERISTICS

A. PRECIPITATION ZONE = 2

B. $P_{6,100} = P_{360} =$ 2.35

C. TOTAL PROJECT AREA (A_T) = 57,360 SF; 1.32 AC

D. EXISTING LAND TREATMENT

1. PROJECT SITE (BASINS 7,12A,12B) 57,360 SF = 1.32 AC

TREATMENT	AREA (SF/AC)	%
C	48,580 / 1.12	85
D	8,780 / 0.20	15

E. DEVELOPED LAND TREATMENT

1. PROJECT SITE (BASINS 7,12A,12B) 57,360 SF = 1.32 AC

TREATMENT	AREA (SF/AC)	%
C	9,040 / 0.21	16
D	48,320 / 1.11	84

II. HYDROLOGY

A. EXISTING CONDITION

1. PROJECT SITE (BASINS 7,12A,12B)

a. VOLUME

$E_W = (E_A A_A + E_B A_B + E_C A_C + E_D A_D)/A_T$

$E_W =$ ((1.13*1.12) + (2.12*0.20))/1.32 = 1.28 IN

$V_{100} = (E_W/12)A_T =$ (1.28/12)1.32 = 0.1405 AC-FT = 6,120 CF

b. PEAK DISCHARGE

$Q_P = Q_{PA}A_A + Q_{PB}A_B + Q_{PC}A_C + Q_{PD}A_D$

$Q_P = Q_{100} =$ ((3.14*1.12) + (4.70*0.20)) = 4.4 CFS

B. DEVELOPED CONDITION

1. PROJECT SITE (BASINS 7,12A,12B)

a. VOLUME

$E_W = (E_A A_A + E_B A_B + E_C A_C + E_D A_D)/A_T$

$E_W =$ ((1.13*0.21) + (2.12*1.11))/1.32 = 1.98 IN

$V_{100} = (E_W/12)A_T =$ (1.98/12)1.32 = 0.2151 AC-FT = 9,370 CF

b. PEAK DISCHARGE

$Q_P = Q_{PA}A_A + Q_{PB}A_B + Q_{PC}A_C + Q_{PD}A_D$

$Q_P = Q_{100} =$ ((3.14*0.21) + (4.70*1.11)) = 5.9 CFS

C. COMPARISON

1. PROJECT SITE (BASINS 7,12A,12B)

a. VOLUME

$\Delta V_{100} =$ 9370 - 6120 = 3,250 CF (INCREASE)

b. PEAK DISCHARGE

$\Delta Q_{100} =$ 5.9 - 4.4 = 1.5 CFS (INCREASE)

INDEX OF DRAWINGS

SHEET	DESCRIPTION
1A	DRAINAGE PLAN & CALCULATIONS; INDEX OF DRAWINGS
1	COVER SHEET & ENGINEER'S CERTIFICATION (RECORD DRAWING)
2	DEVELOPMENT PLAN (RECORD DRAWING)
3	DEMOLITION PLAN (RECORD DRAWING)
4	PAVING AND LAYOUT PLAN (RECORD DRAWING)
5A	DRAINAGE BASIN MAP

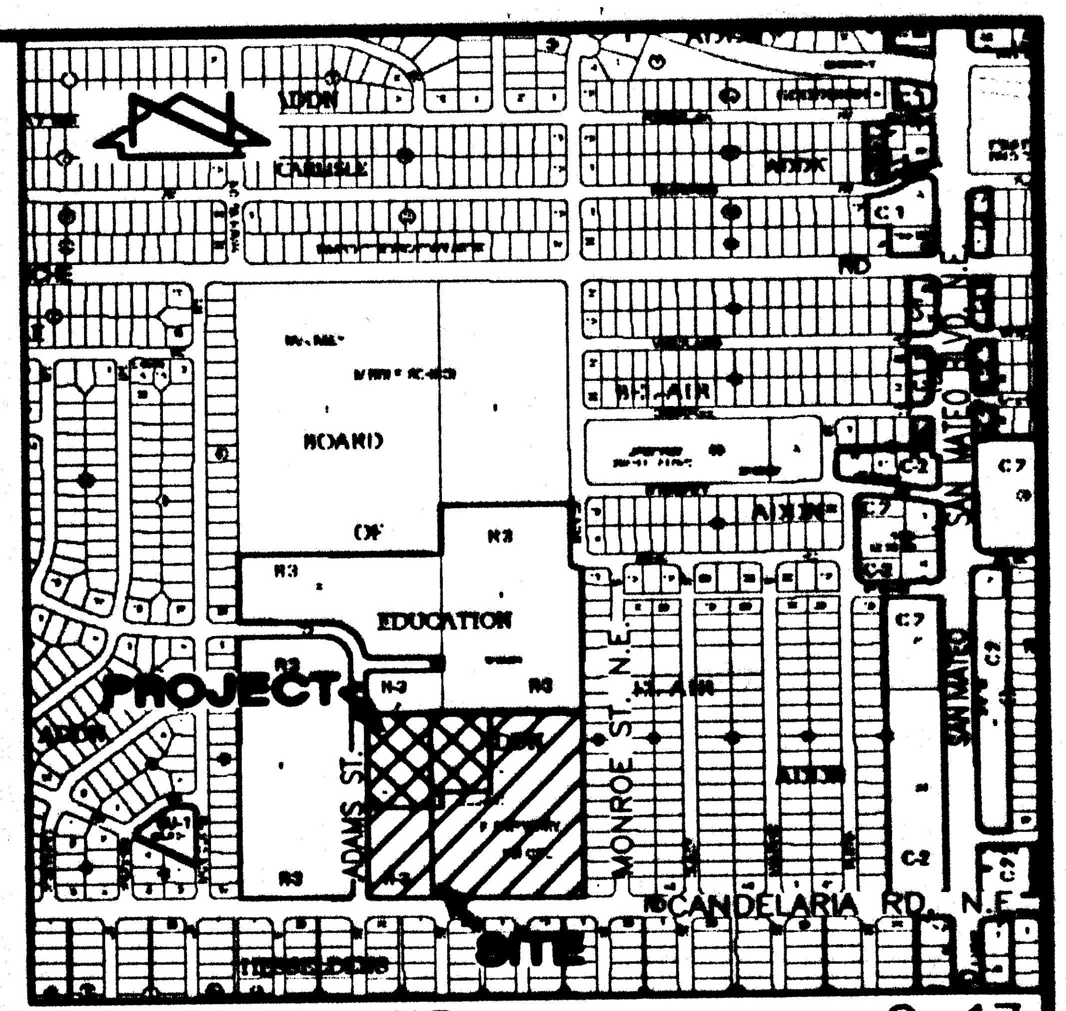

(C3) VICINITY MAP G-17

SCALE: 1" = 750'

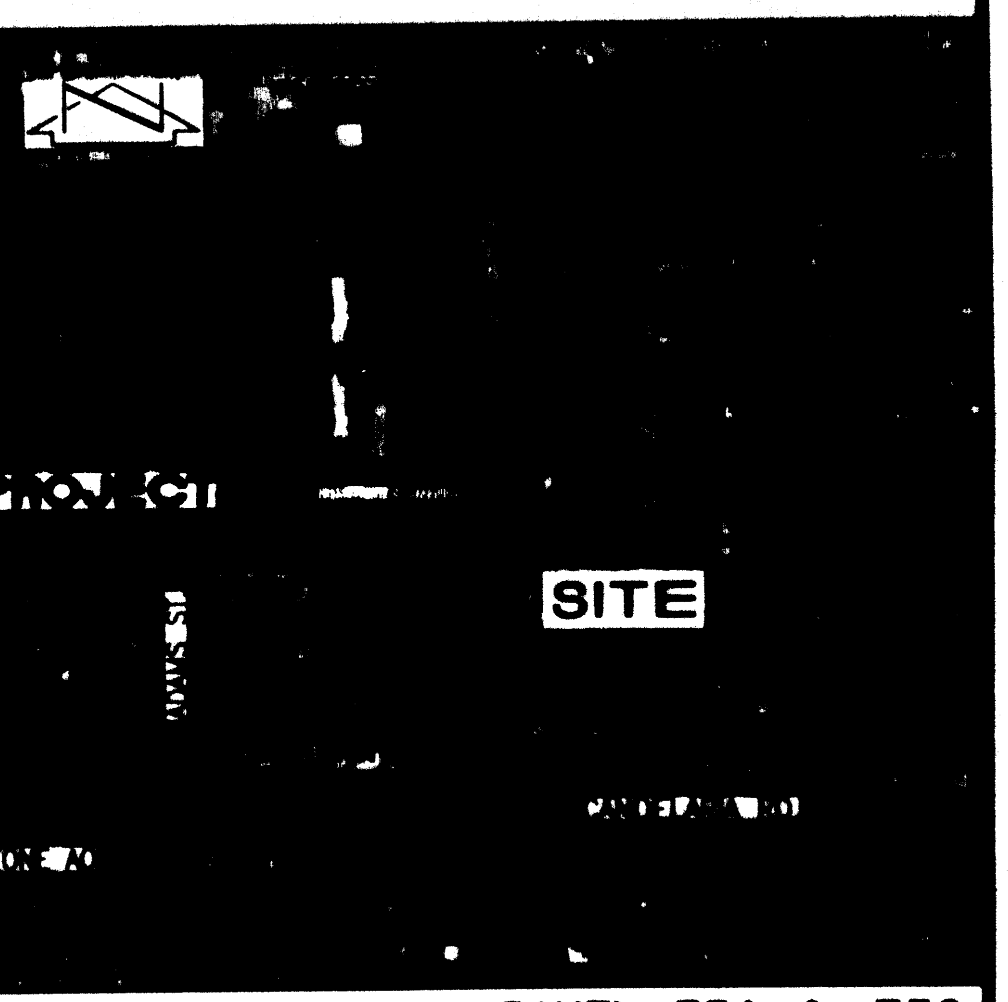

(B3) F.I.R.M. PANEL 351 & 352 OF 825

SCALE: 1" = 500'

HIGH MESA Consulting Group

6010-B MIDWAY PARK BLVD. NE • ALBUQUERQUE, NEW MEXICO 87109

PHONE: 505.345.4250 • FAX: 505.345.4254 • www.highmesacg.com

DRAINAGE PLAN AND CALCULATIONS; INDEX OF DRAWINGS

P.A.P.A. CHARTER SCHOOL AT BEL AIR ELEMENTARY SCHOOL

DESIGNED BY J.D.S./J.G.M.

DRAWN BY C.F.A.

APPROVED BY J.G.M.

NO.	DATE	BY	REVISIONS

JOB NO. 2008.191.6

DATE 10/2009

SHEET 1A OF 9

File Path: [illegible] File Name: 81916DC_R3.DWG Plot Date: 10-16-2009 Plot Time: 1:53 pm

• LEGEND •

MATERIALS
- CONCRETE
- RIP-RAP

LINES
- SUBDIVISION BOUNDARY
- PROPERTY LINE (PLAN)
- PROPERTY LINE (SECTION)
- CENTERLINE
- EASEMENT LINE
- MATCH LINE
- SECTION CUT LINE

EARTHWORK
(EXISTING / NEW)
- CONTOUR LINE (25)
- SPOT ELEVATION
- PROJECT / PHASE BOUNDARY
- FLOWLINE
- DIRECTION OF FLOW

MISCELLANEOUS UTILITIES
- GAS LINE (G)
- UNDERGROUND TELEPHONE (UT)
- UNDERGROUND ELECTRICAL (UE)
- STORM DRAIN (SD)
- STORM DRAIN MANHOLE
- STORM DRAIN INLET

SANITARY SEWER
- SANITARY SEWER LINE (SAS)
- SANITARY SEWER MANHOLE
- SAS SERVICE CONNECTIONS
- SAS CAP OR PLUG
- ENCASEMENT

WATER
- WATER LINE (W)
- WATER SERVICE CONNECTIONS
- GATE VALVE
- FIRE HYDRANT
- BUTTERFLY VALVE
- REDUCER
- WATER PRESSURE ZONE BOUNDARY

WATER FITTINGS
- CAPS AND PLUGS
- ELBOW
- CROSS
- TEE

MISCELLANEOUS
- CHAINLINK FENCE
- FIELD FENCE
- COMMON YARD WALL
- RETAINING WALL
- POWER OR TELEPHONE POLE

File Path: [illegible] | Plot Date: 10-15-2009
File Name: 81916CV_R3.DWG | Plot Time: 1:58 pm

3 RECORD DRAWING

CONSTRUCTION PLANS for P.A.P.A. CHARTER SCHOOL AT BEL AIR ELEMENTARY SCHOOL

ALBUQUERQUE, NEW MEXICO
AUGUST, 2009

APS

3 **ENGINEER'S CERTIFICATION**

I, JEFFREY G. MORTENSEN, NMPE 8547, OF THE FIRM HIGH MESA CONSULTING GROUP, HEREBY CERTIFY THAT THIS PROJECT HAS BEEN GRADED, DRAINED AND CONSTRUCTED IN SUBSTANTIAL COMPLIANCE WITH AND IN ACCORDANCE WITH THE DESIGN INTENT OF THE APPROVED PLAN DATED 08-19-2009 AND REVISED 08-25-2009 AND 09-02-2009 TO INCORPORATE PROGRAM CHANGES. THE RECORD INFORMATION EDITED ONTO THE ORIGINAL DESIGN DOCUMENT HAS BEEN OBTAINED BY ME OR UNDER MY DIRECT SUPERVISION AS SUPPLEMENTAL SITE DATA COMBINED WITH RECORD INFORMATION OBTAINED FROM THE AS-BUILT SURVEY PERFORMED UNDER THE DIRECT SUPERVISION OF JOSEPH M. SOLOMON, JR., (NMPS 15075) OF THE FIRM HIGH MESA CONSULTING GROUP AND IS TRUE AND CORRECT TO THE BEST OF MY KNOWLEDGE AND BELIEF. THIS CERTIFICATION IS SUBMITTED TO DOCUMENT COMPLETION OF THOSE IMPROVEMENTS IDENTIFIED ON THE APPROVED PLAN FOR THE OWNER AND CITY OF ALBUQUERQUE.

THE RECORD INFORMATION PRESENTED HEREON IS NOT NECESSARILY COMPLETE AND INTENDED ONLY TO VERIFY SUBSTANTIAL COMPLIANCE OF THE GRADING AND DRAINAGE AND SPECIFIC LIMITED ASPECTS OF THIS PROJECT. THIS CERTIFICATION DOES NOT ADDRESS ADA COMPLIANCE WHICH IS BEYOND THE SCOPE OF GRADING AND DRAINAGE. THOSE RELYING ON THIS RECORD DOCUMENT ARE ADVISED TO OBTAIN INDEPENDENT VERIFICATION OF ITS ACCURACY BEFORE USING IT FOR ANY OTHER PURPOSE.

JEFFREY G. MORTENSEN
NMPE NO. 8547

JEFFREY G. MORTENSEN · NEW MEXICO · 8547 · REGISTERED PROFESSIONAL ENGINEER

10-14-2009
DATE

INDEX OF DRAWINGS

SHEET	DESCRIPTION
1	COVER SHEET, VICINITY MAP, GENERAL NOTES, LEGEND AND INDEX OF DRAWINGS
2	DEVELOPMENT PLAN
3	DEMOLITION PLAN
4	PAVING AND LAYOUT PLAN
5	GRADING PLAN
6	UTILITY PLAN
7	FENCING PLAN
8	PORTABLE CLASSROOM FOUNDATION PLAN
2 9	REFUSE PAD DETAILS

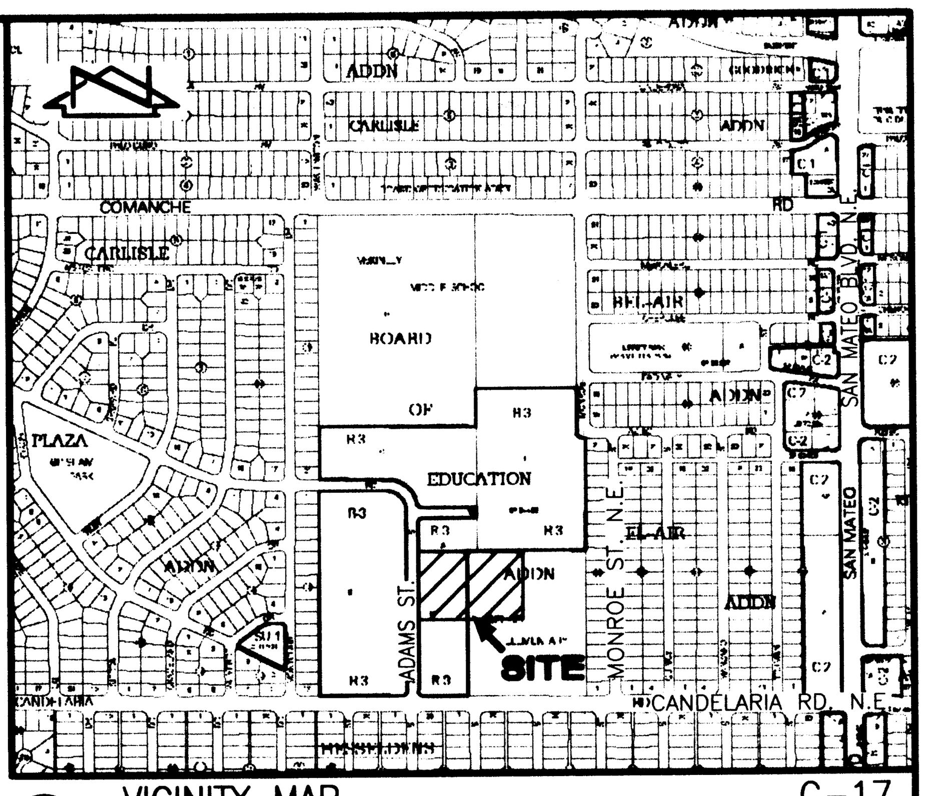

E5 VICINITY MAP G-17
SCALE: 1" = 750'

GENERAL NOTES:

1. ALL WORK DETAILED ON THESE PLANS TO BE PERFORMED UNDER CONTRACT SHALL, EXCEPT AS OTHERWISE STATED OR PROVIDED FOR HEREON, BE CONSTRUCTED IN ACCORDANCE WITH THE NEW MEXICO STANDARD SPECIFICATIONS FOR PUBLIC WORKS CONSTRUCTION – 1987, PUBLISHED BY THE NEW MEXICO CHAPTER AMERICAN PUBLIC WORKS ASSOCIATION. (REVISED 12/06)
2. TWO (2) WORKING DAYS PRIOR TO ANY EXCAVATION, CONTRACTOR MUST CONTACT NEW MEXICO ONE CALL SYSTEM, 260-1990, (ALBUQUERQUE AREA) 1-800-321-ALERT (2537) (STATEWIDE) FOR LOCATION OF EXISTING PUBLIC UTILITIES AND ABASTO UTILITY LOCATING COMPANY (888-3341) FOR THE LOCATION OF EXISTING PRIVATE UTILITIES ON APS PROPERTY.
3. IF ANY UTILITY LINES, PIPELINES, OR UNDERGROUND UTILITY LINES ARE SHOWN ON THESE DRAWINGS, THEY ARE SHOWN IN AN APPROXIMATE MANNER ONLY, AND SUCH LINES MAY EXIST WHERE NONE ARE SHOWN. IF ANY SUCH EXISTING LINES ARE SHOWN, THE LOCATION IS BASED UPON INFORMATION PROVIDED BY THE OWNER OF SAID UTILITY, AND THE INFORMATION MAY BE INCOMPLETE, OR MAY BE OBSOLETE BY THE TIME CONSTRUCTION COMMENCES. THE ENGINEER HAS CONDUCTED ONLY PRELIMINARY INVESTIGATION OF THE LOCATION, DEPTH, SIZE, OR TYPE OF EXISTING UTILITY LINES, PIPELINES, OR UNDERGROUND UTILITY LINES. THIS INVESTIGATION IS NOT CONCLUSIVE, AND MAY NOT BE COMPLETE, THEREFORE, MAKES NO REPRESENTATION PERTAINING THERETO, AND ASSUMES NO RESPONSIBILITY OR LIABILITY THEREFORE. THE CONTRACTOR SHALL INFORM ITSELF OF THE LOCATION OF ANY UTILITY LINE, PIPELINE, OR UNDERGROUND UTILITY LINE IN OR NEAR THE AREA OF THE WORK IN ADVANCE OF AND DURING EXCAVATION WORK. THE CONTRACTOR IS FULLY RESPONSIBLE FOR ANY AND ALL DAMAGE CAUSED BY ITS FAILURE TO LOCATE, IDENTIFY AND PRESERVE ANY AND ALL EXISTING UTILITIES, PIPELINES, AND UNDERGROUND UTILITY LINES. IN PLANNING AND CONDUCTING EXCAVATION, THE CONTRACTOR SHALL COMPLY WITH STATE STATUTES, MUNICIPAL AND LOCAL ORDINANCES, RULES AND REGULATIONS, IF ANY, PERTAINING TO THE LOCATION OF THESE LINES AND FACILITIES.
4. SHOULD A CONFLICT EXIST BETWEEN THESE PLANS AND ACTUAL FIELD CONDITIONS, THE CONTRACTOR SHALL PROMPTLY NOTIFY THE ENGINEER IN WRITING SO THAT THE CONFLICT CAN BE RESOLVED WITH A MINIMUM AMOUNT OF DELAY FOR ALL PARTIES.
5. THE CONTRACTOR SHALL MAINTAIN ACCESS TO ADJACENT PROPERTIES DURING CONSTRUCTION.
6. ALL WORK ON THIS PROJECT SHALL BE PERFORMED IN ACCORDANCE WITH APPLICABLE FEDERAL, STATE AND LOCAL LAWS, RULES AND REGULATIONS CONCERNING SAFETY AND HEALTH.
7. THE CONTRACTOR SHALL ENSURE THAT NO SOIL ERODES FROM THE SITE INTO PUBLIC RIGHT-OF-WAY OR ONTO PRIVATE PROPERTY.
8. THE CONTRACTOR SHALL PROMPTLY CLEAN UP ANY MATERIAL EXCAVATED WITHIN THE PUBLIC RIGHT-OF-WAY SO THAT THE EXCAVATED MATERIAL IS NOT SUSCEPTIBLE TO BEING WASHED DOWN THE STREET.
9. CONTRACTOR SHALL NOTIFY THE ENGINEER NOT LESS THAN SEVEN (7) DAYS PRIOR TO STARTING WORK IN ORDER THAT THE ENGINEER MAY TAKE NECESSARY MEASURES TO ENSURE THE PRESERVATION OF SURVEY MONUMENTS. CONTRACTOR SHALL NOT DISTURB PERMANENT SURVEY MONUMENTS WITHOUT THE CONSENT OF THE ENGINEER AND SHALL NOTIFY THE ENGINEER AND BEAR THE EXPENSE OF REPLACING ANY THAT MAY BE DISTURBED WITHOUT PERMISSION. REPLACEMENT SHALL BE DONE ONLY BY THE ENGINEER. WHEN A CHANGE IS MADE IN THE FINISHED ELEVATION OF THE PAVEMENT OF ANY ROADWAY IN WHICH A PERMANENT SURVEY MONUMENT IS LOCATED, CONTRACTOR SHALL, AT HIS OWN EXPENSE, ADJUST THE MONUMENT COVER TO THE NEW GRADE UNLESS OTHERWISE SPECIFIED.
10. ALL PAVEMENT MARKINGS AND TRAFFIC SIGNS SHALL COMPLY WITH THE MANUAL OF UNIFORM TRAFFIC CONTROL DEVICES (MUTCD) PUBLISHED BY THE U.S. DEPARTMENT OF TRANSPORTATION FEDERAL HIGHWAY ADMINISTRATION, LATEST EDITION.
11. IF THE REMOVAL OF EXISTING CURB AND GUTTER, SIDEWALK, AND/OR PAVING IS REQUIRED, THE CONTRACTOR SHALL SAWCUT AND/OR REMOVE TO THE NEAREST JOINT. WHEN ABUTTING NEW PAVEMENT TO EXISTING, THE CONTRACTOR SHALL CUT BACK THE EXISTING PAVING TO A STRAIGHT LINE IN ORDER TO REMOVE ANY BROKEN OR CRACKED PAVEMENT. CURB AND GUTTER AND/OR PAVEMENT SHOWN AS EXISTING AND NOT TO BE REMOVED UNDER THIS CONTRACT AND WHICH IS DAMAGED OR DISPLACED BY THE CONTRACTOR SHALL BE REMOVED AND REPLACED BY THE CONTRACTOR AT THE CONTRACTOR'S EXPENSE.
12. A DISPOSAL SITE FOR ALL EXCESS EXCAVATION MATERIAL (CONTAMINATED OR OTHERWISE), ASPHALTIC PAVING, CONCRETE PAVING, ETC. SHALL BE OBTAINED BY THE CONTRACTOR IN COMPLIANCE WITH APPLICABLE REGULATIONS. ALL COSTS INCURRED IN OBTAINING A DISPOSAL SITE AND IN HAUL THERETO SHALL BE CONSIDERED INCIDENTAL TO CONSTRUCTION, THEREFORE, NO SEPARATE PAYMENT SHALL BE MADE.
13. A BORROW SITE FOR IMPORT MATERIAL SHALL BE OBTAINED BY THE CONTRACTOR IN COMPLIANCE WITH APPLICABLE REGULATIONS. ALL COSTS INCURRED IN OBTAINING A BORROW SITE AND IN HAUL THERETO SHALL BE CONSIDERED INCIDENTAL TO CONSTRUCTION, THEREFORE, NO SEPARATE PAYMENT SHALL BE MADE.
14. THE CONTRACTOR SHALL BE RESPONSIBLE FOR SAFELY OBTAINING THE REQUIRED COMPACTION. THE CONTRACTOR SHALL SELECT AND USE METHODS WHICH SHALL NOT BE INJURIOUS OR DAMAGING TO THE EXISTING FACILITIES AND STRUCTURES WHICH SURROUND THE WORK AREAS.
15. THE CONTRACTOR SHALL CONFINE HIS WORK WITHIN THE CONSTRUCTION LIMITS IN ORDER TO PRESERVE THE EXISTING IMPROVEMENTS AND SO AS NOT TO INTERFERE WITH THE OPERATIONS OF THE EXISTING FACILITIES.
16. THE CONTRACTOR SHALL BE RESPONSIBLE FOR SELECTING APPROPRIATE MEANS AND METHODS TO EXCAVATE AND TRENCH AND/OR INSTALL PIPE SO AS TO NOT EXCEED RIGHT-OF-WAY OR EASEMENT LIMITS, AND SO AS NOT TO INTERFERE WITH OTHER UTILITIES OR IMPROVEMENTS. THIS SHALL BE CONSIDERED INCIDENTAL TO CONSTRUCTION, THEREFORE, NO SEPARATE PAYMENT WILL BE MADE.
17. THE CONTRACTOR SHALL BE RESPONSIBLE FOR PROTECTING, SUPPORTING AND REPLACING, IF DAMAGED, ALL UTILITIES ENCOUNTERED DURING CONSTRUCTION. THIS SHALL BE CONSIDERED INCIDENTAL TO CONSTRUCTION, THEREFORE, NO SEPARATE PAYMENT WILL BE MADE.
18. ALL DIMENSIONS AND RADII OF CURB, CURB RETURNS, AND WALLS ARE SHOWN TO THE FACE OF CURB AND/OR WALL.
19. THE CONTRACTOR SHALL NOTIFY THE OWNER 48 HOURS PRIOR TO STRIPING SO THAT LAYOUT CAN BE VERIFIED.
20. PRIOR TO CONSTRUCTION, THE CONTRACTOR SHALL EXCAVATE AND VERIFY THE HORIZONTAL AND VERTICAL LOCATION OF ALL POTENTIAL OBSTRUCTIONS. SHOULD A CONFLICT EXIST, THE CONTRACTOR SHALL NOTIFY THE ENGINEER IN WRITING SO THAT THE CONFLICT CAN BE RESOLVED WITH A MINIMUM AMOUNT OF DELAY. THE CONTRACTOR SHALL BE RESPONSIBLE FOR ALL INTERPRETATIONS IT MAKES WITHOUT FIRST CONTACTING THE ENGINEER AS REQUIRED ABOVE.
21. WHEN APPLICABLE, CONTRACTOR SHALL SECURE, ON BEHALF OF THE OWNER AND OPERATORS, "TOPSOIL DISTURBANCE PERMIT" FROM THE CITY AND/OR FILE A NOTICE OF INTENT (N.O.I.) WITH THE EPA PRIOR TO BEGINNING CONSTRUCTION.
22. ALL FILL SHALL BE FREE FROM VEGETATION, DEBRIS, AND OTHER DELETERIOUS MATERIALS.
23. ALL FILL SHALL BE COMPACTED TO A MINIMUM OF 95% ASTM D-1557 UNLESS A GREATER COMPACTION REQUIREMENT IS OTHERWISE SPECIFIED.
24. CAUTION: THESE DRAWINGS DO NOT INCLUDE NECESSARY COMPONENTS FOR CONSTRUCTION SAFETY WHICH SHALL REMAIN THE RESPONSIBILITY OF THE CONTRACTOR. ALL EXCAVATION, TRENCHING AND SHORING ACTIVITIES MUST BE CARRIED-OUT IN ACCORDANCE WITH OSHA 29 CFR 1926, SUBPART P-EXCAVATIONS.

JOB NO. 2008.191.6

REV.	SHEETS	CITY ENGINEER	DATE	USER DEPARTMENT	DATE	USER DEPARTMENT	DATE
1	2, 4-7		8/24/09				
2	2, 4-7, 9		8/28/09				
3	1-9		10/09				

APPROVAL OF REVISIONS

08-25-2009
09-02-2009
JEFFREY G. MORTENSEN · NEW MEXICO · 8547 · REGISTERED PROFESSIONAL ENGINEER
08-19-2009

HIGH MESA Consulting Group
6010-B MIDWAY PARK BLVD. NE • ALBUQUERQUE, NEW MEXICO 87109
PHONE: 505.345.4250 • FAX: 505.345.4254 • www.highmesacg.com

APPROVED FOR CONSTRUCTION

C.E.

RECEIVED
OCT 29 2009
HYDROLOGY SECTION

SHEET 1 OF 9

LEGAL DESCRIPTION

TRACTS H AND J, BEL AIR ELEMENTARY SCHOOL, ALBUQUERQUE, NEW MEXICO.

EASEMENT KEYED NOTES

EASEMENTS

- (A) 5' UTILITY EASEMENT GRANTED BY PLAT D2-120B
- (B) 10' PUBLIC WALK EASEMENT GRANTED BY PLAT D2-120B
- (C) APPROXIMATE LOCATION OF 10' UTILITY EASEMENT GRANTED BY PLAT D2-120B
- (D) 5' UTILITY EASEMENT RANTED BY PLAT D1-39 - OFFSITE
- (E) 5' PUBLIC UTILITY EASEMENT GRANTED BY PLAT C25-149 - OFFSITE

BENCHMARKS

PROJECT BENCHMARK

ACS BENCHMARK 9-C17, "□" CUT CHISELED ON TOP OF CONCRETE CURB AT THE WNW CURB RETURN LOCATED IN THE NORTHWEST QUADRANT OF THE INTERSECTION OF CANDELARIA ROAD N.E. AND SAN MATEO BOULEVARD N.E.
ELEVATION = 5204.30 FEET (NGVD 29)

T.B.M. #1

A REBAR WITH CAP STAMPED "LS 7719" TAGGED WITH WASHER STAMPED "NMPS 11184", AT THE NORTHWEST CORNER OF THE PROPERTY, AS SHOWN ON THIS SHEET.
ELEVATION = 5171.37 FEET (NGVD 29)

SURVEY NOTE

THIS IS NOT A BOUNDARY SURVEY. DATA IS SHOWN FOR ORIENTATION ONLY. THE BOUNDARY INFORMATION DEPICTED BY THIS PLAN IS BASED UPON THE BOUNDARY SURVEY PREPARED BY HIGH MESA CONSULTING GROUP, NMPS NO. 11184, DATED 4/16/2007, (JOB NO. 2006.184.4). TOPOGRAPHIC INFORMATION IS BASED UPON A TOPOGRAPHIC SURVEY PREPARED BY HIGH MESA CONSULTING GROUP, NMPS NO. 11184, DATED 4/16/2007, (JOB NO. 2006.184.4).

LEGEND

AP	ASPHALT PAVEMENT
ARD	ASPHALT RUNDOWN
ASPH	ASPHALT
BB	BREAKER BOX
BLDG	BUILDING
BR	BIKE RACK
C	COMMUNICATION
C&G	CURB AND GUTTER
C/PM	COMMUNICATION BY PAINT MARK
CB	CONCRETE BENCH
CCT	CONCRETE CUT
CI	CAST IRON PIPE
CLD	CENTERLINE OF DOOR
CLDD	CENTERLINE OF DOUBLE DOOR
CLF	CHAINLINK FENCE
CMU	CONCRETE MASONRY UNIT
CNY	CANOPY
CO	SANITARY SEWER CLEANOUT
CONC	CONCRETE
COP	CURB OPENING
CP	CONCRETE PAD
CRW	CONCRETE RETAINING WALL
CWALL	CONCRETE WALL
DBL	DOUBLE
DW	DRIVEWAY
EA	EDGE OF ASPHALT
EC	EDGE OF CONCRETE
ECND	ELECTRIC CONDUIT
EP	ELECTRIC PANEL
EPB	ELECTRIC PULLBOX
ET	ELECTRIC TRANSFORMER
FH	FIRE HYDRANT
FL	FLOWLINE
G/PM	GAS BY PAINT MARK
GS	GAS SERVICE
GW	GUY WIRE
INV	INVERT ELEVATION
LB	LADDER BARS
LS	LANDSCAPED AREA
MCB	METER CAN WITH BIBVALVE
MCHV	METER CAN WITH HOSEBIB AND VALVE
MCSV	METER CAN WITH SPRINKLER VALVE
MDS	METAL DOOR STOP
MH	MANHOLE
MLP	METAL LIGHT POLE WITH 2' CONCRETE BASE
MRL	METAL RAMP LANDING
MSL	METAL STEPS LANDING
OHC(1)	OVERHEAD COMMUNICATION (# OF LINES)
OHE(1)	OVERHEAD ELECTRIC (# OF LINES)
OHM	OVERHEAD ELECTRIC MAST
PB	PARKING BUMPER
PE	PLAYGROUND EQUIPMENT
PLTR	PLANTER
PORT	PORTABLE
PS	PARKING STRIPE
PVC	POLYVINYL CHLORIDE
PVMT	PAVEMENT
RD	ROOF DRAIN
SAS	SANITARY SEWER
SAS/PM	SANITARY SEWER CLEANOUT
SB	SPEED BUMP
SCB	SPRINKLER CONTROL BOX
SGP	STEEL GUARD POST
SHR	STEEL HANDRAIL
SI	STORM INLET
STD	STANDARD
SW	SIDEWALK
SWC	SIDEWALK CULVERT
TA	TOP OF ASPHALT
TC	TOP OF CURB
TCO	TOP OF CONCRETE
TG	TOP OF GRATE
TS	TRAFFIC SIDEWALK
TYP	TYPICAL
UG	UNDERGROUND
UPP	UTILITY PAVING PATCH
VCP	VITRIFIED CLAY PIPE
VG	VALLEY GUTTER
WCR	WHEELCHAIR RAMP
WF	WATER FAUCET
WHB	WATER HOTBOX
WL	WATERLINE
WL/PM	WATERLINE BY PAINT MARK
WMB	WATER METER BOX
WPP	WOOD POWER POLE
WVB	WATER VALVE BOX
*	UTILITY MARKER
	PROPOSED ASPHALT
	PROPOSED GRAVEL BASE COURSE
	PROPOSED CONCRETE

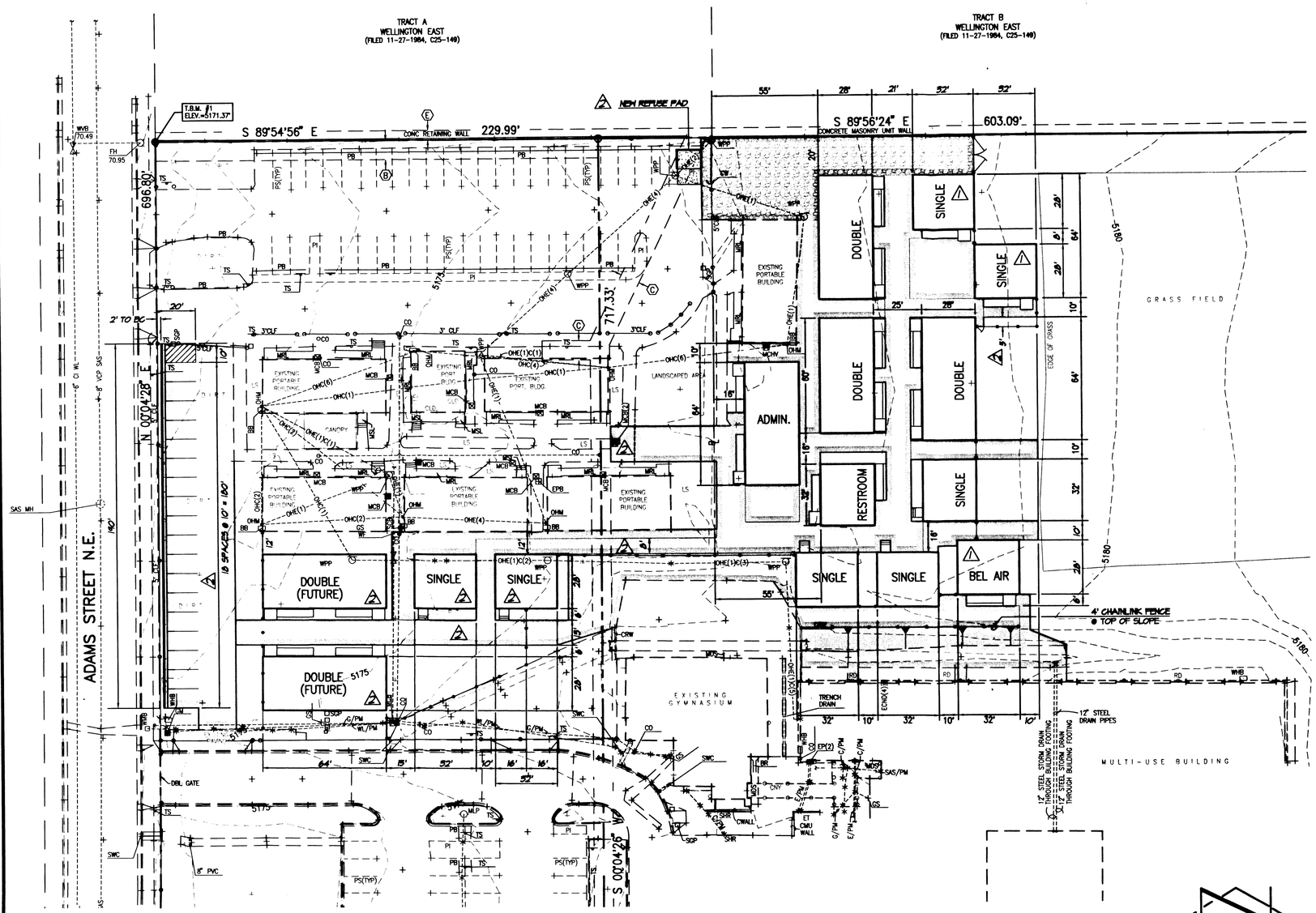

A1 DEVELOPMENT PLAN (FOR INFORMATION ONLY)
SCALE: 1" = 30'

RECORD DRAWING

RECEIVED
OCT 29 2009
HYDROLOGY SECTION

HIGH MESA Consulting Group
6010-B MIDWAY PARK BLVD. NE
ALBUQUERQUE, NEW MEXICO 87109
PHONE: 505.345.4250 FAX: 505.345.4254
www.highmesacg.com

NOT FOR CONSTRUCTION

P.A.P.A. CHARTER SCHOOL AT BEL AIR ELEMENTARY SCHOOL

NO.	DATE	BY	REVISIONS
1	8/24/09	J.G.M.	SHIFT BEL AIR PORT., REPL. N.E. DOUBLE WITH 2 SINGLES
2	8/31/09	J.G.M.	ADD REFUSE PAD, ADD 2 SINGLE PORT., EXPAND PARKING
3	10/09	R.J.E.	RECORD DRAWING

PROJECT No.	2008.191.6
DESIGNED BY	J.G.M.
DRAWN BY	C.F.A.
APPROVED BY	J.G.M.
SHEET TITLE	DEVELOPMENT PLAN

C-102
SHEET 2 OF 9

File Path: [illegible]
File Name: 8191GPDP_R3.DWG
Plot Date: 10-16-2009
Plot Time: 08:21 am

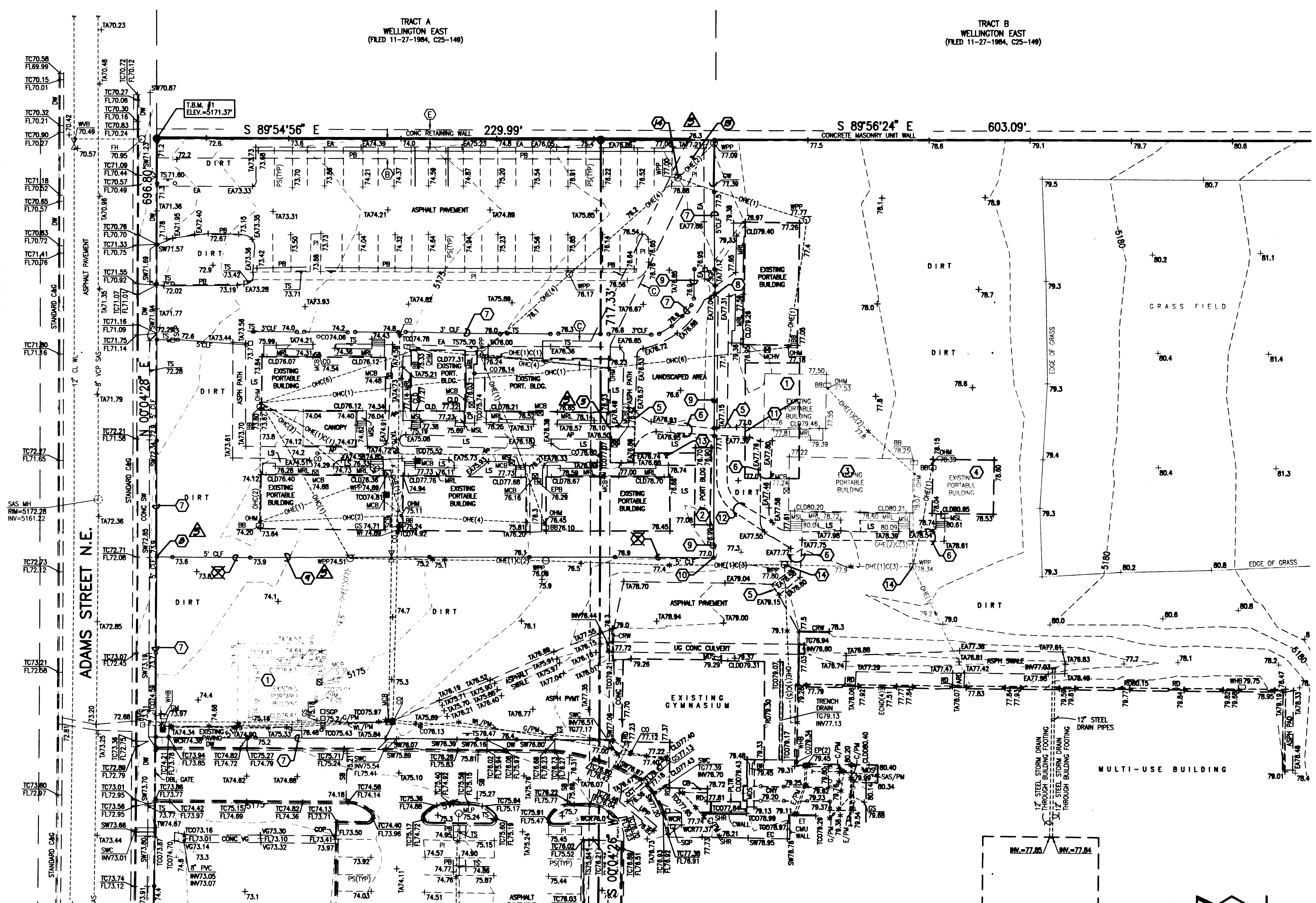

A1 DEMOLITION PLAN

SCALE: 1" = 30'

DEMOLITION KEYED NOTES

1. EXISTING SINGLE PORTABLE AND UTILITIES REMOVED FROM SITE POST-SURVEY
2. EXISTING STORAGE BUILDING REMOVED FROM SITE POST-SURVEY
3. ✓ EXISTING 60' DOUBLE PORTABLE RELOCATED ONSITE POST-SURVEY (SEE KEYED NOTE 11); REMOVE AND DISPOSE OF TWO SOUTHERNMOST PIERS
4. ✓ EXISTING "BEL AIR" PORTABLE ~~TO BE~~ REMOVED AND RELOCATED BY THIS PROJECT
5. ✓ NEATLY SAWCUT EXISTING ASPHALT PAVING
6. ✓ REMOVE AND DISPOSE OF EXISTING ASPHALT PAVING
7. ✓ EXISTING CHAINLINK FENCE TO REMAIN
8. ✓ BEGIN REMOVAL OF EXISTING CHAIN LINK FENCE
9. ✓ REMOVE AND SALVAGE EXISTING CHAIN LINK FENCE
10. ✓ END REMOVAL OF EXISTING CHAIN LINK FENCE
11. ✓ EXISTING DOUBLE PORTABLE REMOVED AND RELOCATED POST-SURVEY ~~TO BE~~ REMOVED AND RELOCATED BY THIS PROJECT
12. ✓ REMOVE AND DISPOSE OF EXISTING ASPHALT PAVING INSTALLED POST-SURVEY
13. ✓ REMOVE AND RETURN EXISTING PAVERS
14. ✓ EXISTING POWER POLE ~~TO BE~~ REMOVED, REPLACED & RELOCATED
15. *NEW REFUSE PAD LOCATION - SEE SHEET 9*

AS-BUILT LEGEND

CONSTRUCT	RECORD INFORMATION (VERIFIED BY ENGINEER)
✓	AS-CONSTRUCTED = AS-DESIGNED (VERIFIED BY ENGINEER)
~~38~~ 42"	RECORD INFORMATION (VERIFIED BY ENGINEER)
+~~25~~.2	RECORD INFORMATION (VERIFIED BY ENGINEER)
⊕ 28,~~98~~.92	RECORD INFORMATION (VERIFIED BY ENGINEER)
✓	AS-CONSTRUCTED = AS-DESIGNED (VERIFIED BY AS-BUILT SURVEY)
~~31~~ 31.8	RECORD INFORMATION FROM AS-BUILT SURVEY
+26.9	RECORD INFORMATION FROM AS-BUILT SURVEY
⊕ 31.25.22	RECORD INFORMATION FROM AS-BUILT SURVEY

LEGAL DESCRIPTION

TRACTS H AND J, BEL AIR ELEMENTARY SCHOOL, ALBUQUERQUE, NEW MEXICO.

EASEMENT KEYED NOTES

EASEMENTS

- (A) 5' UTILITY EASEMENT GRANTED BY PLAT D2-120B
- (B) 10' PUBLIC WALK EASEMENT GRANTED BY PLAT D2-120B
- (C) APPROXIMATE LOCATION OF 10' UTILITY EASEMENT GRANTED BY PLAT D2-120B
- (D) 5' UTILITY EASEMENT RANTED BY PLAT D1-39 - OFFSITE
- (E) 5' PUBLIC UTILITY EASEMENT GRANTED BY PLAT C25-149 - OFFSITE

BENCHMARKS

PROJECT BENCHMARK

ACS BENCHMARK 9-G17, "□" CUT CHISELED ON TOP OF CONCRETE CURB AT THE WNW CURB RETURN LOCATED IN THE NORTHWEST QUADRANT OF THE INTERSECTION OF CANDELARIA ROAD N.E. AND SAN MATEO BOULEVARD N.E.
ELEVATION = 5204.30 FEET (NGVD 29)

T.B.M. #1

A REBAR WITH CAP STAMPED "LS 7719" TAGGED WITH WASHER STAMPED "NMPS 11184", AT THE NORTHWEST CORNER OF THE PROPERTY, AS SHOWN ON THIS SHEET.
ELEVATION = 5171.37 FEET (NGVD 29)

SURVEY NOTE

THIS IS NOT A BOUNDARY SURVEY. DATA IS SHOWN FOR ORIENTATION ONLY. THE BOUNDARY INFORMATION DEPICTED BY THIS PLAN IS BASED UPON THE BOUNDARY SURVEY PREPARED BY HIGH MESA CONSULTING GROUP, NMPS NO. 11184, DATED 4/16/2007, (JOB NO. 2006.184.4). TOPOGRAPHIC INFORMATION IS BASED UPON A TOPOGRAPHIC SURVEY PREPARED BY HIGH MESA CONSULTING GROUP, NMPS NO. 11184, DATED 4/16/2007, (JOB NO. 2006.184.4).

LEGEND

AP	ASPHALT PAVEMENT
ARD	ASPHALT RUNDOWN
ASPH	ASPHALT
BB	BREAKER BOX
BLDG	BUILDING
BR	BIKE RACK
C	COMMUNICATION
C&G	CURB AND GUTTER
C/PM	COMMUNICATION BY PAINT MARK
CB	CONCRETE BENCH
CCT	CONCRETE CUT
CI	CAST IRON PIPE
CLD	CENTERLINE OF DOOR
CLDD	CENTERLINE OF DOUBLE DOOR
CLF	CHAINLINK FENCE
CMU	CONCRETE MASONRY UNIT
CNY	CANOPY
CO	SANITARY SEWER CLEANOUT
CONC	CONCRETE
COP	CURB OPENING
CP	CONCRETE PAD
CRW	CONCRETE RETAINING WALL
CWALL	CONCRETE WALL
DBL	DOUBLE
DW	DRIVEWAY
EA	EDGE OF ASPHALT
EC	EDGE OF CONCRETE
ECND	ELECTRIC CONDUIT
EP	ELECTRIC PANEL
EPB	ELECTRIC PULLBOX
ET	ELECTRIC TRANSFORMER
FH	FIRE HYDRANT
FL	FLOWLINE
G/PM	GAS BY PAINT MARK
GS	GAS SERVICE
GW	GUY WIRE
INV	INVERT ELEVATION
LB	LADDER BARS
LS	LANDSCAPED AREA
MCB	METER CAN WITH BIBVALVE
MCHV	METER CAN WITH HOSEBIB AND VALVE
MCSV	METER CAN WITH SPRINKLER VALVE
MDS	METAL DOOR STOP
MH	MANHOLE
MLP	METAL LIGHT POLE WITH 2' CONCRETE BASE
MRL	METAL RAMP LANDING
MSL	METAL STEPS LANDING
OHC(1)	OVERHEAD COMMUNICATION (# OF LINES)
OHE(1)	OVERHEAD ELECTRIC (# OF LINES)
OHM	OVERHEAD ELECTRIC MAST
PB	PARKING BUMPER
PE	PLAYGROUND EQUIPMENT
PLTR	PLANTER
PORT	PORTABLE
PS	PARKING STRIPE
PVC	POLYVINYL CHLORIDE
PVMT	PAVEMENT
RD	ROOF DRAIN
SAS	SANITARY SEWER
SAS/PM	SANITARY SEWER CLEANOUT
SB	SPEED BUMP
SCB	SPRINKLER CONTROL BOX
SGP	STEEL GUARD POST
SHR	STEEL HANDRAIL
SI	STORM INLET
STD	STANDARD
SW	SIDEWALK
SWC	SIDEWALK CULVERT
TA	TOP OF ASPHALT
TC	TOP OF CURB
TCO	TOP OF CONCRETE
TG	TOP OF GRATE
TS	TRAFFIC SIDEWALK
TYP	TYPICAL
UG	UNDERGROUND
UPP	UTILITY PAVING PATCH
VCP	VITRIFIED CLAY PIPE
VG	VALLEY GUTTER
WCR	WHEELCHAIR RAMP
WF	WATER FAUCET
WHB	WATER HOTBOX
WL	WATERLINE
WL/PM	WATERLINE BY PAINT MARK
WMB	WATER METER BOX
WPP	WOOD POWER POLE
WVB	WATER VALVE BOX
*	UTILITY MARKER

RECORD DRAWING

FOR CERTIFICATION, SEE SHEET 1

RECEIVED
OCT 29 2009
HYDROLOGY SECTION

HIGH MESA Consulting Group
6010-B MIDWAY PARK BLVD. NE
ALBUQUERQUE, NEW MEXICO 87109
PHONE: 505.345.4250 FAX: 505.345.4254
www.highmesacg.com

JEFFREY G. MORTENSEN, NEW MEXICO 8547, REGISTERED PROFESSIONAL ENGINEER
10-16-2009
08-19-2009

P.A.P.A. CHARTER SCHOOL AT BEL AIR ELEMENTARY SCHOOL

NO.	DATE	BY	REVISIONS
3	10/09	RJE	RECORD DWG. & CERT.

PROJECT No.	2008.191.6
DESIGNED BY	J.G.M.
DRAWN BY	C.F.A.
APPROVED BY	J.G.M.

SHEET TITLE

DEMOLITION PLAN

C-103

SHEET 3 OF 9

File Path:	[illegible]	Plot Date:	10-16-2009
File Name:	81916DP_R3.DWG	Plot Time:	08:20 am

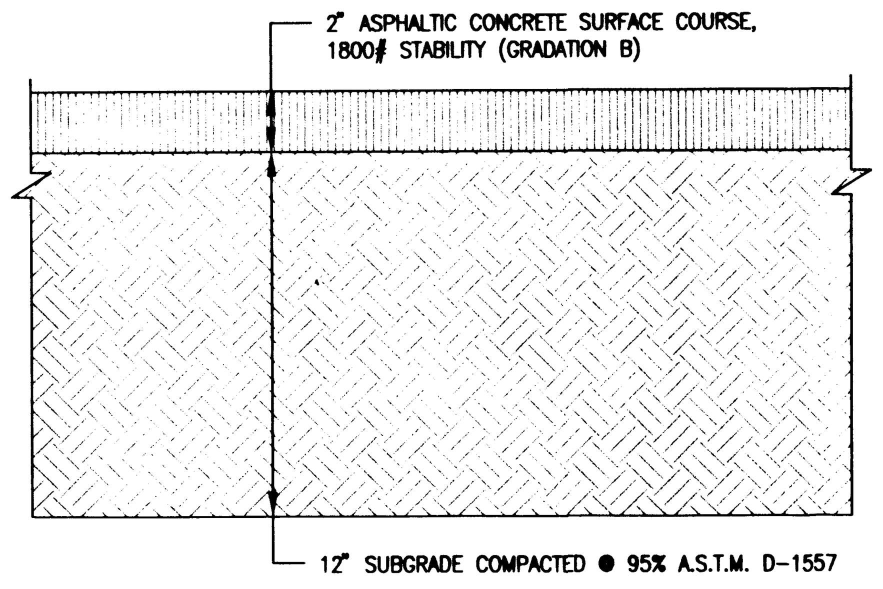

E1 TYPICAL LIGHT DUTY PAVEMENT SECTION (FOR SIDEWALK AREAS)
SCALE: 1" = 0'-5"

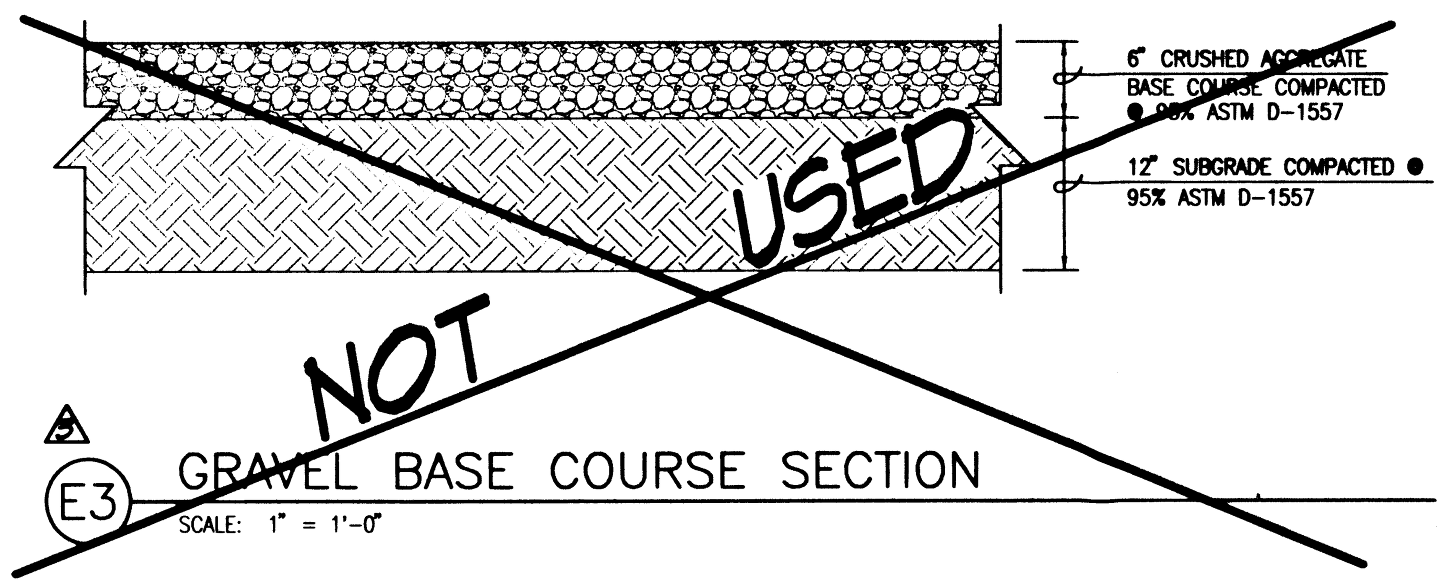

E3 GRAVEL BASE COURSE SECTION
SCALE: 1" = 1'-0"

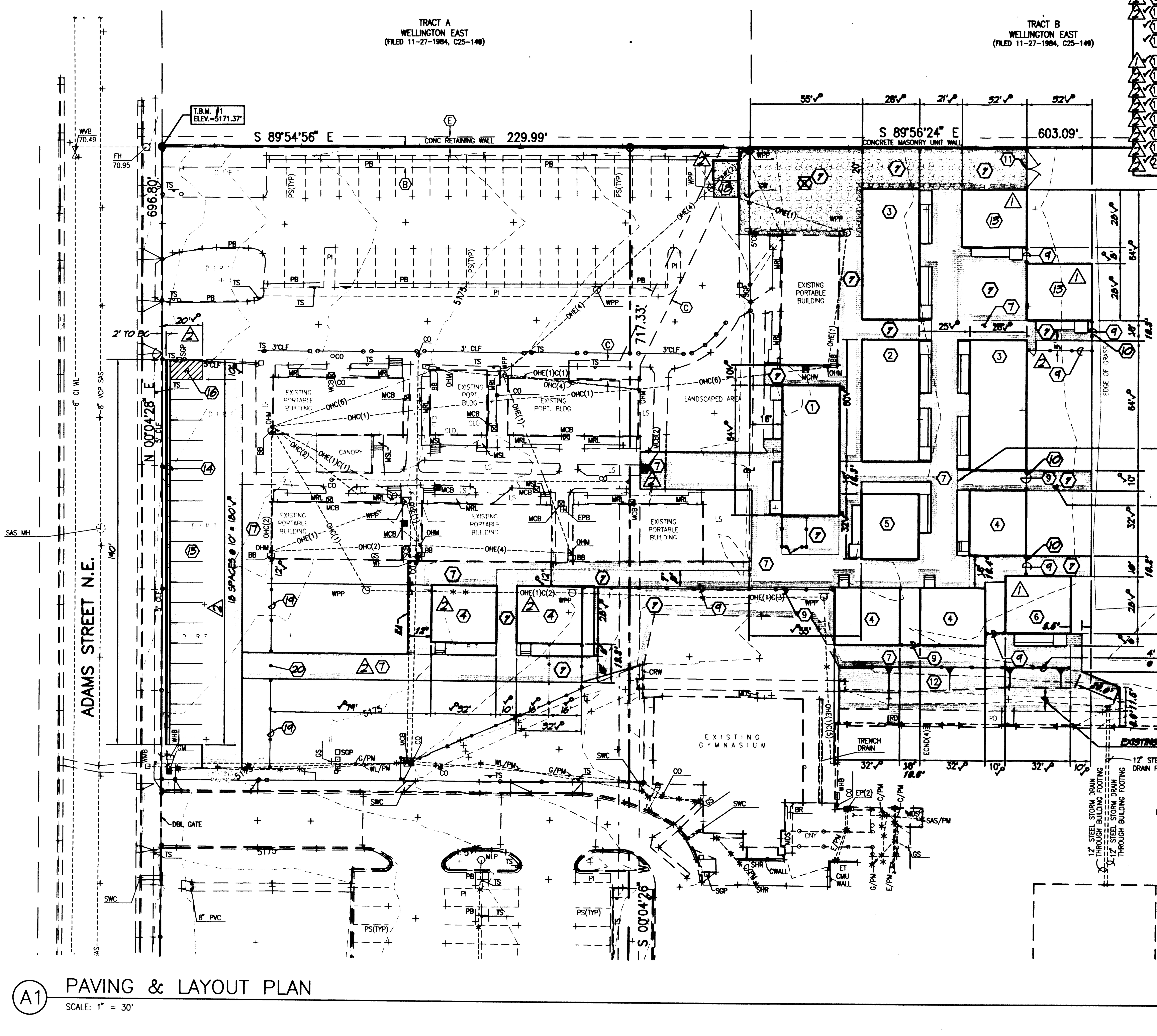

A1 PAVING & LAYOUT PLAN
SCALE: 1" = 30'

LEGAL DESCRIPTION

TRACTS H AND J, BEL AIR ELEMENTARY SCHOOL, ALBUQUERQUE, NEW MEXICO.

EASEMENT KEYED NOTES

EASEMENTS

- (A) 5' UTILITY EASEMENT GRANTED BY PLAT D2-120B
- (B) 10' PUBLIC WALK EASEMENT GRANTED BY PLAT D2-120B
- (C) APPROXIMATE LOCATION OF 10' UTILITY EASEMENT GRANTED BY PLAT D2-120B
- (D) 5' UTILITY EASEMENT RANTED BY PLAT D1-39 – OFFSITE
- (E) 5' PUBLIC UTILITY EASEMENT GRANTED BY PLAT C25-149 – OFFSITE

PAVING AND LAYOUT KEYED NOTES

1. ✓ ~~INSTALL~~ "NEW" ADMINISTRATION PORTABLE BUILDING – ~~REQUIRES~~ TWO NEW FOOTINGS AT SOUTH END; MATCH EXISTING TOP OF FOOTING GRADES
2. ✓ ~~INSTALL~~ RELOCATED DOUBLE 60' PORTABLE CLASSROOM BUILDING
3. ✓ ~~INSTALL~~ "NEW" DOUBLE PORTABLE CLASSROOM BUILDING
4. ✓ ~~INSTALL~~ "NEW" SINGLE PORTABLE CLASSROOM BUILDING
5. ✓ ~~INSTALL~~ "NEW" PORTABLE RESTROOM BUILDING
6. ✓ ~~INSTALL~~ RELOCATED "BEL AIR" SINGLE PORTABLE CLASSROOM BUILDING
7. ✓ ~~CONSTRUCT~~ NEW LIGHT DUTY ASPHALT PAVING PER TYPICAL SECTION THIS SHEET
8. ~~CONSTRUCT 6" GRAVEL BASE COURSE PER TYPICAL SECTION THIS SHEET~~
9. ✓ NEW FENCE, SEE SHEET 7
10. ✓ NEW ~~8'~~ 5' SINGLE LEAF PEDESTRIAN GATE, SEE SHEET 7
11. ✓ NEW 20' DOUBLE LEAF CHAIN LINK GATE, SEE SHEET 7
12. ✓ ~~CONSTRUCT~~ 2" ASPHALTIC CONCRETE SLOPE PAVING PER TYPICAL SECTION (LIGHT DUTY ASPHALT PAVING) THIS SHEET
13. ✓ ~~INSTALL~~ NEW SINGLE PORTABLE (RIGHT HAND)
14. ✓ ~~CONSTRUCT~~ 6" CONCRETE CURB & GUTTER PER TYPICAL SECTION, SHEET 5
15. ✓ ~~CONSTRUCT~~ 3" ASPHALTIC CONCRETE PAVING PER TYPICAL SECTION, SHEET 5
16. ✓ ~~PAINT~~ CROSS HATCH PAVEMENT MARKINGS @ 45° & 2' O.C.
17. ✓ EXISTING LANDSCAPING TO REMAIN
18. ✓ NEW REFUSE PAD, SEE SHEET 9
19. ✓ ~~SALVAGED~~ NEW CHAIN LINK FENCE, SEE SHEET 7
20. ✓ ~~INSTALL~~ 1-6" BOLLARD PER TYPICAL SECTION, SHEET 8

AS-BUILT LEGEND

CONSTRUCT	RECORD INFORMATION (VERIFIED BY ENGINEER)
✓	AS-CONSTRUCTED = AS-DESIGNED (VERIFIED BY ENGINEER)
36' 42"	RECORD INFORMATION (VERIFIED BY ENGINEER)
+23.2	RECORD INFORMATION (VERIFIED BY ENGINEER)
⊕ 28.98.42	RECORD INFORMATION (VERIFIED BY ENGINEER)
✓	AS-CONSTRUCTED = AS-DESIGNED (VERIFIED BY AS-BUILT SURVEY)
31' 31.8	RECORD INFORMATION FROM AS-BUILT SURVEY
+26.9	RECORD INFORMATION FROM AS-BUILT SURVEY
⊕ 31.25.22	RECORD INFORMATION FROM AS-BUILT SURVEY

BENCHMARKS

PROJECT BENCHMARK

ACS BENCHMARK 9-G17, "□" CUT CHISELED ON TOP OF CONCRETE CURB AT THE WNW CURB RETURN LOCATED IN THE NORTHWEST QUADRANT OF THE INTERSECTION OF CANDELARIA ROAD N.E. AND SAN MATEO BOULEVARD N.E.
ELEVATION = 5204.30 FEET (NGVD 29)

T.B.M. #1

A REBAR WITH CAP STAMPED "LS 7719" TAGGED WITH WASHER STAMPED "NMPS 11184", AT THE NORTHWEST CORNER OF THE PROPERTY, AS SHOWN ON THIS SHEET.
ELEVATION = 5171.37 FEET (NGVD 29)

SURVEY NOTE

THIS IS NOT A BOUNDARY SURVEY. DATA IS SHOWN FOR ORIENTATION ONLY. THE BOUNDARY INFORMATION DEPICTED BY THIS PLAN IS BASED UPON THE BOUNDARY SURVEY PREPARED BY HIGH MESA CONSULTING GROUP, NMPS NO. 11184, DATED 4/16/2007, (JOB NO. 2006.184.4). TOPOGRAPHIC INFORMATION IS BASED UPON A TOPOGRAPHIC SURVEY PREPARED BY HIGH MESA CONSULTING GROUP, NMPS NO. 11184, DATED 4/16/2007, (JOB NO. 2006.184.4).

LEGEND

AP	ASPHALT PAVEMENT
ARD	ASPHALT RUNDOWN
ASPH	ASPHALT
BB	BREAKER BOX
BLDG	BUILDING
BR	BIKE RACK
C	COMMUNICATION
C&G	CURB AND GUTTER
C/PM	COMMUNICATION BY PAINT MARK
CB	CONCRETE BENCH
CCT	CONCRETE CUT
CI	CAST IRON PIPE
CLD	CENTERLINE OF DOOR
CLDD	CENTERLINE OF DOUBLE DOOR
CLF	CHAINLINK FENCE
CMU	CONCRETE MASONRY UNIT
CNY	CANOPY
CO	SANITARY SEWER CLEANOUT
CONC	CONCRETE
COP	CURB OPENING
CP	CONCRETE PAD
CRW	CONCRETE RETAINING WALL
CWALL	CONCRETE WALL
DBL	DOUBLE
DW	DRIVEWAY
EA	EDGE OF ASPHALT
EC	EDGE OF CONCRETE
ECND	ELECTRIC CONDUIT
EP	ELECTRIC PANEL
EPB	ELECTRIC PULLBOX
ET	ELECTRIC TRANSFORMER
FH	FIRE HYDRANT
FL	FLOWLINE
G/PM	GAS BY PAINT MARK
GS	GAS SERVICE
GW	GUY WIRE
INV	INVERT ELEVATION
LB	LADDER BARS
LS	LANDSCAPED AREA
MCB	METER CAN WITH BIBVALVE
MCHV	METER CAN WITH HOSEBIB AND VALVE
MCSV	METER CAN WITH SPRINKLER VALVE
MDS	METAL DOOR STOP
MH	MANHOLE
MLP	METAL LIGHT POLE WITH 2' CONCRETE BASE
MRL	METAL RAMP LANDING
MSL	METAL STEPS LANDING
OHC(1)	OVERHEAD COMMUNICATION (# OF LINES)
OHE(1)	OVERHEAD ELECTRIC (# OF LINES)
OHM	OVERHEAD ELECTRIC MAST
PB	PARKING BUMPER
PE	PLAYGROUND EQUIPMENT
PLTR	PLANTER
PORT	PORTABLE
PS	PARKING STRIPE
PVC	POLYVINYL CHLORIDE
PVMT	PAVEMENT
RD	ROOF DRAIN
SAS	SANITARY SEWER
SAS/PM	SANITARY SEWER CLEANOUT
SB	SPEED BUMP
SCB	SPRINKLER CONTROL BOX
SGP	STEEL GUARD POST
SHR	STEEL HANDRAIL
SI	STORM INLET
STD	STANDARD
SW	SIDEWALK
SWC	SIDEWALK CULVERT
TA	TOP OF ASPHALT
TC	TOP OF CURB
TCO	TOP OF CONCRETE
TG	TOP OF GRATE
TS	TRAFFIC SIDEWALK
TYP	TYPICAL
UG	UNDERGROUND
UPP	UTILITY PAVING PATCH
VCP	VITRIFIED CLAY PIPE
VG	VALLEY GUTTER
WCR	WHEELCHAIR RAMP
WF	WATER FAUCET
WHB	WATER HOTBOX
WL	WATERLINE
WL/PM	WATERLINE BY PAINT MARK
WMB	WATER METER BOX
WPP	WOOD POWER POLE
WVB	WATER VALVE BOX
*	UTILITY MARKER
(shaded)	PROPOSED ASPHALT
(hatched)	PROPOSED GRAVEL BASE COURSE
(stippled)	PROPOSED CONCRETE

RECORD DRAWING
FOR CERTIFICATION, SEE SHEET 1

RECEIVED OCT 29 2009 HYDROLOGY SECTION

HIGH MESA Consulting Group
6010-B MIDWAY PARK BLVD. NE
ALBUQUERQUE, NEW MEXICO 87109
PHONE: 505.345.4250 FAX: 505.345.4254
www.highmesacg.com

P.A.P.A. CHARTER SCHOOL AT BEL AIR ELEMENTARY SCHOOL

NO.	DATE	BY	REVISIONS
1	8/24/09	J.G.M.	SHIFT BEL AIR PORT.; REPL. N.E. DOUBLE WITH 2 SINGLES
2	8/31/09	J.G.M.	ADD REFUSE PAD; ADD 2 SINGLE PORT.; EXPAND PARKING
3	10/09	R.J.E.	RECORD DWG. & CERT.

PROJECT No.	2008.191.6
DESIGNED BY	J.G.M.
DRAWN BY	C.F.A.
APPROVED BY	J.G.M.

SHEET TITLE

PAVING AND LAYOUT PLAN

C-104

SHEET 4 OF 9

File Path: [illegible]
File Name: 81916PLP_R3.DWG Plot Date: 10-16-2009 Plot Time: 08:04 am

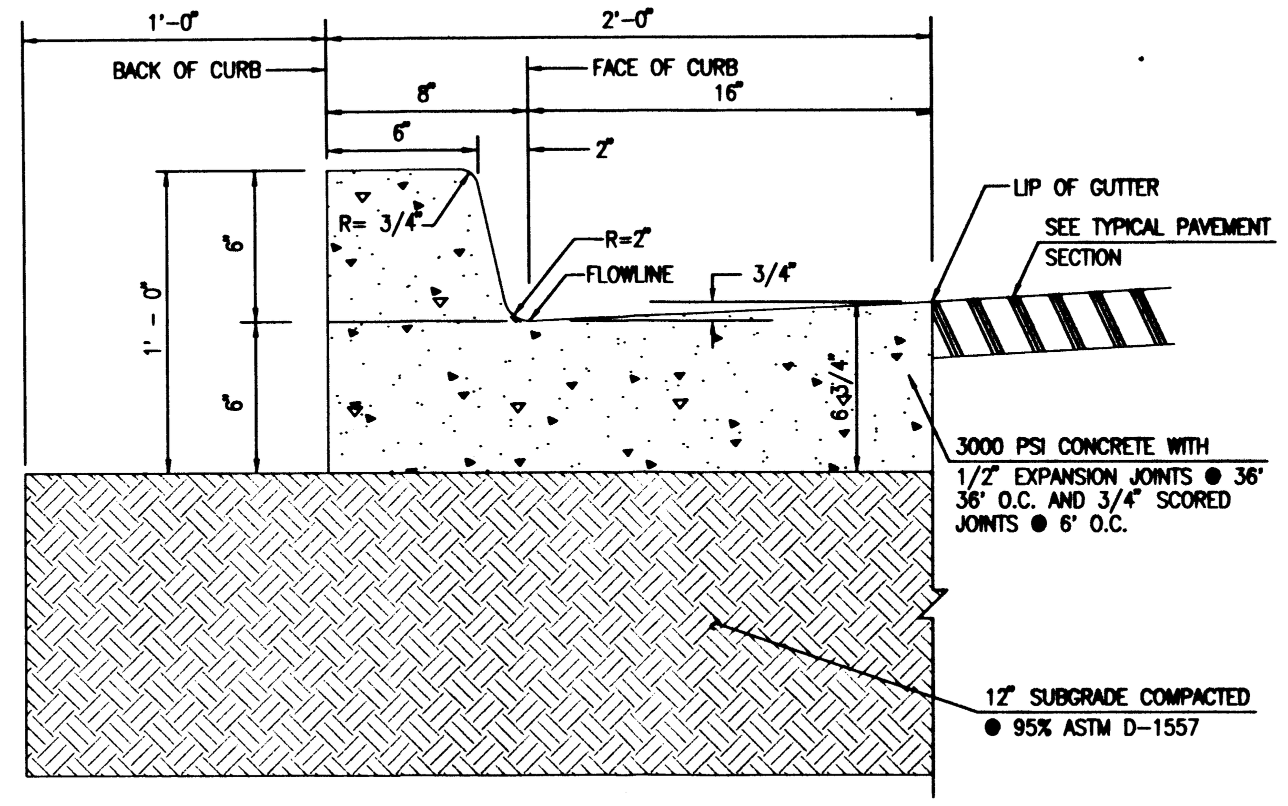

D1 TYPICAL SIX-INCH CURB & GUTTER

SCALE: 1" = 0'-6"

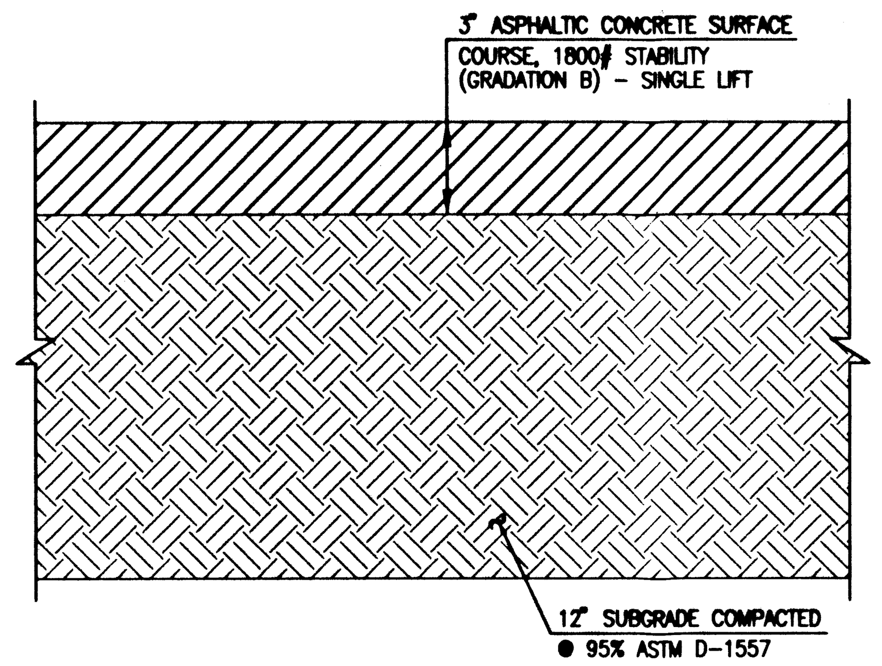

D3 TYPICAL HEAVY DUTY (3") PAVING SECTION (FOR PARKING AREAS)

SCALE: 1" = 0' - 5'

LEGAL DESCRIPTION

TRACTS H AND J, BEL AIR ELEMENTARY SCHOOL, ALBUQUERQUE, NEW MEXICO.

SURVEY NOTE

THIS IS NOT A BOUNDARY SURVEY. DATA IS SHOWN FOR ORIENTATION ONLY. THE BOUNDARY INFORMATION DEPICTED BY THIS PLAN IS BASED UPON THE BOUNDARY SURVEY PREPARED BY HIGH MESA CONSULTING GROUP, NMPS NO. 11184, DATED 4/16/2007, (JOB NO. 2006.184.4). TOPOGRAPHIC INFORMATION IS BASED UPON A TOPOGRAPHIC SURVEY PREPARED BY HIGH MESA CONSULTING GROUP, NMPS NO. 11184, DATED 4/16/2007, (JOB NO. 2006.184.4).

EASEMENT KEYED NOTES

EASEMENTS

- (A) 5' UTILITY EASEMENT GRANTED BY PLAT D2-120B
- (B) 10' PUBLIC WALK EASEMENT GRANTED BY PLAT D2-120B
- (C) APPROXIMATE LOCATION OF 10' UTILITY EASEMENT GRANTED BY PLAT D2-120B
- (D) 5' UTILITY EASEMENT RANTED BY PLAT D1-39 - OFFSITE
- (E) 5' PUBLIC UTILITY EASEMENT GRANTED BY PLAT C25-149 - OFFSITE

3 AS-BUILT LEGEND

CONSTRUCT	RECORD INFORMATION (VERIFIED BY ENGINEER)
✓	AS-CONSTRUCTED = AS-DESIGNED (VERIFIED BY ENGINEER)
36' 42"	RECORD INFORMATION (VERIFIED BY ENGINEER)
+25.2	RECORD INFORMATION (VERIFIED BY ENGINEER)
● 28,98.42	RECORD INFORMATION (VERIFIED BY ENGINEER)
✓	AS-CONSTRUCTED = AS-DESIGNED (VERIFIED BY AS-BUILT SURVEY)
31' 31.8	RECORD INFORMATION FROM AS-BUILT SURVEY
+26.9	RECORD INFORMATION FROM AS-BUILT SURVEY
● 31.25.22	RECORD INFORMATION FROM AS-BUILT SURVEY

BENCHMARKS

PROJECT BENCHMARK

ACS BENCHMARK 9-G17, "□" CUT CHISELED ON TOP OF CONCRETE CURB AT THE WNW CURB RETURN LOCATED IN THE NORTHWEST QUADRANT OF THE INTERSECTION OF CANDELARIA ROAD N.E. AND SAN MATEO BOULEVARD N.E.
ELEVATION = 5204.30 FEET (NGVD 29)

T.B.M. #1

A REBAR WITH CAP STAMPED "LS 7719" TAGGED WITH WASHER STAMPED "NMPS 11184", AT THE NORTHWEST CORNER OF THE PROPERTY, AS SHOWN ON THIS SHEET.
ELEVATION = 5171.37 FEET (NGVD 29)

LEGEND

AP	ASPHALT PAVEMENT
ARD	ASPHALT RUNDOWN
ASPH	ASPHALT
BB	BREAKER BOX
BLDG	BUILDING
BR	BIKE RACK
C	COMMUNICATION
C&G	CURB AND GUTTER
C/PM	COMMUNICATION BY PAINT MARK
CB	CONCRETE BENCH
CCT	CONCRETE CUT
CI	CAST IRON PIPE
CLD	CENTERLINE OF DOOR
CLDD	CENTERLINE OF DOUBLE DOOR
CLF	CHAINLINK FENCE
CMU	CONCRETE MASONRY UNIT
CNY	CANOPY
CO	SANITARY SEWER CLEANOUT
CONC	CONCRETE
COP	CURB OPENING
CP	CONCRETE PAD
CRW	CONCRETE RETAINING WALL
CWALL	CONCRETE WALL
DBL	DOUBLE
DW	DRIVEWAY
EA	EDGE OF ASPHALT
EC	EDGE OF CONCRETE
ECND	ELECTRIC CONDUIT
EP	ELECTRIC PANEL
EPB	ELECTRIC PULLBOX
ET	ELECTRIC TRANSFORMER
FH	FIRE HYDRANT
FL	FLOWLINE
G/PM	GAS BY PAINT MARK
GS	GAS SERVICE
GW	GUY WIRE
INV	INVERT ELEVATION
LB	LADDER BARS
LS	LANDSCAPED AREA
MCB	METER CAN WITH BIBVALVE
MCHV	METER CAN WITH HOSEBIB AND VALVE
MCSV	METER CAN WITH SPRINKLER VALVE
MDS	METAL DOOR STOP
MH	MANHOLE
MLP	METAL LIGHT POLE WITH 2' CONCRETE BASE
MRL	METAL RAMP LANDING
MSL	METAL STEPS LANDING
OHC(1)	OVERHEAD COMMUNICATION (# OF LINES)
OHE(1)	OVERHEAD ELECTRIC (# OF LINES)
OHM	OVERHEAD ELECTRIC MAST
PB	PARKING BUMPER
PE	PLAYGROUND EQUIPMENT
PLTR	PLANTER
PORT	PORTABLE
PS	PARKING STRIPE
PVC	POLYVINYL CHLORIDE
PVMT	PAVEMENT
RD	ROOF DRAIN
SAS	SANITARY SEWER
SAS/PM	SANITARY SEWER CLEANOUT
SB	SPEED BUMP
SCB	SPRINKLER CONTROL BOX
SGP	STEEL GUARD POST
SHR	STEEL HANDRAIL
SI	STORM INLET
STD	STANDARD
SW	SIDEWALK
SWC	SIDEWALK CULVERT
TA	TOP OF ASPHALT
TC	TOP OF CURB
TCO	TOP OF CONCRETE
TG	TOP OF GRATE
TS	TRAFFIC SIDEWALK
TYP	TYPICAL
UG	UNDERGROUND
UPP	UTILITY PAVING PATCH
VCP	VITRIFIED CLAY PIPE
VG	VALLEY GUTTER
WCR	WHEELCHAIR RAMP
WF	WATER FAUCET
WHB	WATER HOTBOX
WL	WATERLINE
WL/PM	WATERLINE BY PAINT MARK
WMB	WATER METER BOX
WPP	WOOD POWER POLE
WVB	WATER VALVE BOX
*	UTILITY MARKER
	PROPOSED ASPHALT
	PROPOSED GRAVEL BASE COURSE
	PROPOSED CONCRETE
● 25.41	PROPOSED SPOT ELEVATION
+24.86	EXISTING FLOWLINE ELEVATION
08	PROPOSED CONTOUR
5008	EXISTING CONTOUR
	PROPOSED FLOWLINE
	PROPOSED DIRECTION OF FLOW
	EXISTING DIRECTION OF FLOW
	RIGHT OF WAY LINE
	HIGH POINT

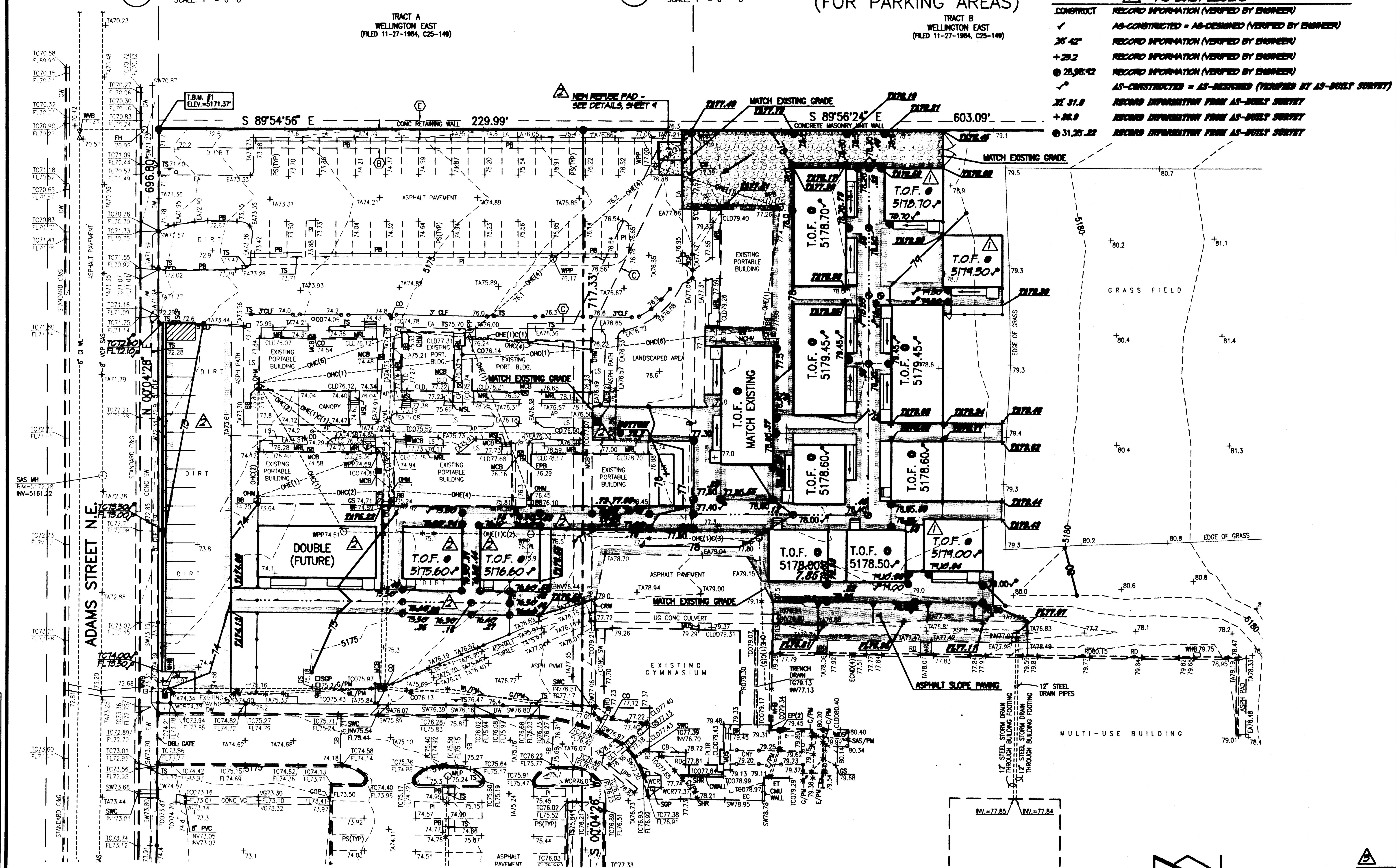

A1 GRADING PLAN

SCALE: 1" = 30'

HIGH MESA Consulting Group
6010-B MIDWAY PARK BLVD. NE
ALBUQUERQUE, NEW MEXICO 87109
PHONE: 505.345.4250 FAX: 505.345.4254
www.highmesacg.com

P.A.P.A. CHARTER SCHOOL AT BEL AIR ELEMENTARY SCHOOL

NO.	DATE	BY	REVISIONS
1	8/24/09	J.G.M.	SHIFT BEL AIR PORT.; REFL. N.E. DOUBLE WITH 2 SINGLES
2	8/31/09	J.G.M.	ADD REFUSE PAD; ADD 2 SINGLE PORT.; EXPAND PARKING
3	10/09	R.J.E.	RECORD DRAWING & CERT.

PROJECT No.	2008.191.6
DESIGNED BY	J.G.M.
DRAWN BY	C.F.A.
APPROVED BY	J.G.M.
SHEET TITLE	GRADING PLAN

RECEIVED OCT 29 2009 HYDROLOGY SECTION

RECORD DRAWING

FOR CERTIFICATION, SEE SHEET 1

C-105

File Path: [illegible] Plot Date: 10-16-2009
File Name: 81916GP_R3.DWG Plot Time: 08:12 am

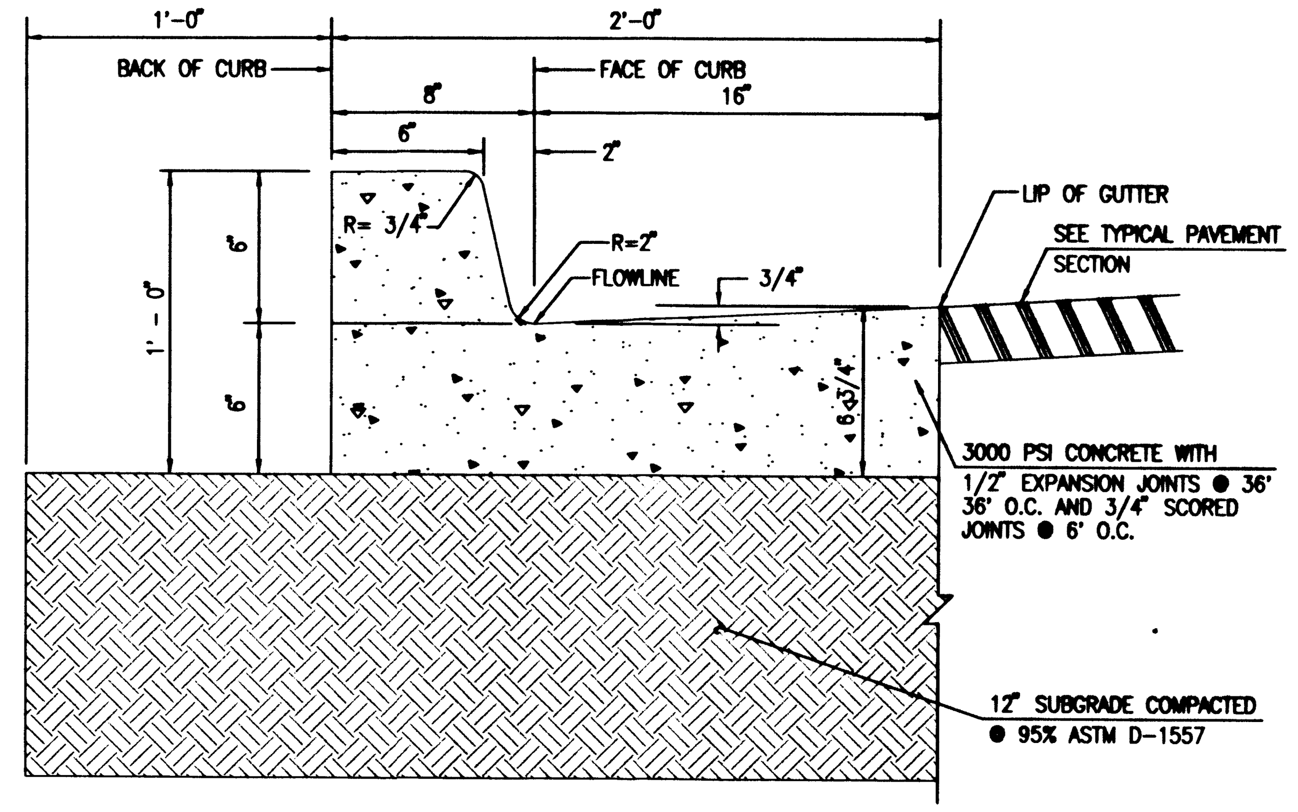

D1 TYPICAL SIX-INCH CURB & GUTTER

SCALE: 1" = 0'-6"

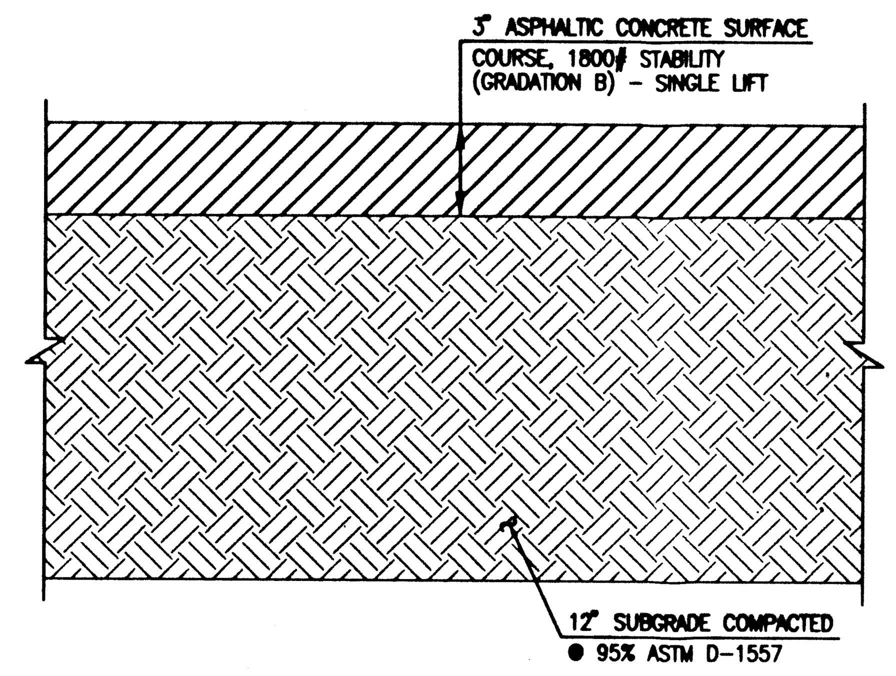

D3 TYPICAL HEAVY DUTY (3") PAVING SECTION (FOR PARKING AREAS)

SCALE: 1" = 0' - 5"

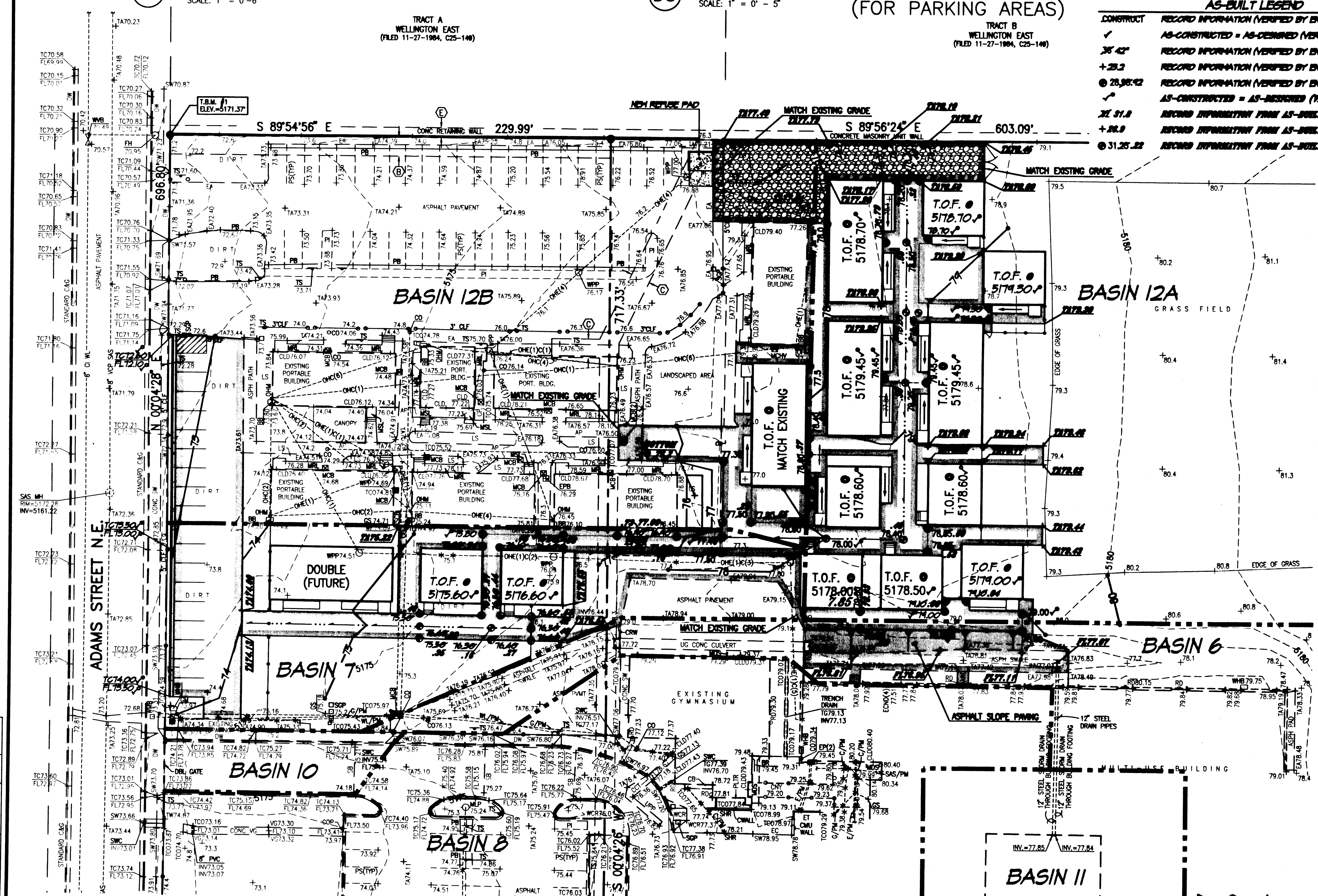

A1 GRADING PLAN

SCALE: 1" = 30'

LEGAL DESCRIPTION

TRACTS H AND J, BEL AIR ELEMENTARY SCHOOL, ALBUQUERQUE, NEW MEXICO.

SURVEY NOTE

THIS IS NOT A BOUNDARY SURVEY. DATA IS SHOWN FOR ORIENTATION ONLY. THE BOUNDARY INFORMATION DEPICTED BY THIS PLAN IS BASED UPON THE BOUNDARY SURVEY PREPARED BY HIGH MESA CONSULTING GROUP, NMPS NO. 11184, DATED 4/16/2007, (JOB NO. 2006.184.4). TOPOGRAPHIC INFORMATION IS BASED UPON A TOPOGRAPHIC SURVEY PREPARED BY HIGH MESA CONSULTING GROUP, NMPS NO. 11184, DATED 4/16/2007, (JOB NO. 2006.184.4).

EASEMENT KEYED NOTES

EASEMENTS

- (A) 5' UTILITY EASEMENT GRANTED BY PLAT D2-120B
- (B) 10' PUBLIC WALK EASEMENT GRANTED BY PLAT D2-120B
- (C) APPROXIMATE LOCATION OF 10' UTILITY EASEMENT GRANTED BY PLAT D2-120B
- (D) 5' UTILITY EASEMENT RANTED BY PLAT D1-39 - OFFSITE
- (E) 5' PUBLIC UTILITY EASEMENT GRANTED BY PLAT C25-149 - OFFSITE

AS-BUILT LEGEND

CONSTRUCT	RECORD INFORMATION (VERIFIED BY ENGINEER)
✓	AS-CONSTRUCTED = AS-DESIGNED (VERIFIED BY ENGINEER)
36' 42"	RECORD INFORMATION (VERIFIED BY ENGINEER)
+25.2	RECORD INFORMATION (VERIFIED BY ENGINEER)
● 28.96.42	RECORD INFORMATION (VERIFIED BY ENGINEER)
✓•	AS-CONSTRUCTED = AS-DESIGNED (VERIFIED BY AS-BUILT SURVEY)
31' 31.8	RECORD INFORMATION FROM AS-BUILT SURVEY
+26.9	RECORD INFORMATION FROM AS-BUILT SURVEY
● 31.25.22	RECORD INFORMATION FROM AS-BUILT SURVEY

BENCHMARKS

PROJECT BENCHMARK

ACS BENCHMARK 9-G17, " " CUT CHISELED ON TOP OF CONCRETE CURB AT THE WNW CURB RETURN LOCATED IN THE NORTHWEST QUADRANT OF THE INTERSECTION OF CANDELARIA ROAD N.E. AND SAN MATEO BOULEVARD N.E.
ELEVATION = 5204.30 FEET (NGVD 29)

T.B.M. #1

A REBAR WITH CAP STAMPED "LS 7719" TAGGED WITH WASHER STAMPED "NMPS 11184", AT THE NORTHWEST CORNER OF THE PROPERTY, AS SHOWN ON THIS SHEET.
ELEVATION = 5171.37 FEET (NGVD 29)

LEGEND

AP	ASPHALT PAVEMENT
ARD	ASPHALT RUNDOWN
ASPH	ASPHALT
BB	BREAKER BOX
BLDG	BUILDING
BR	BIKE RACK
C	COMMUNICATION
C&G	CURB AND GUTTER
C/PM	COMMUNICATION BY PAINT MARK
CB	CONCRETE BENCH
CCT	CONCRETE CUT
CI	CAST IRON PIPE
CLD	CENTERLINE OF DOOR
CLDD	CENTERLINE OF DOUBLE DOOR
CLF	CHAINLINK FENCE
CMU	CONCRETE MASONRY UNIT
CNY	CANOPY
CO	SANITARY SEWER CLEANOUT
CONC	CONCRETE
COP	CURB OPENING
CP	CONCRETE PAD
CRW	CONCRETE RETAINING WALL
CWALL	CONCRETE WALL
DBL	DOUBLE
DW	DRIVEWAY
EA	EDGE OF ASPHALT
EC	EDGE OF CONCRETE
ECND	ELECTRIC CONDUIT
EP	ELECTRIC PANEL
EPB	ELECTRIC PULLBOX
ET	ELECTRIC TRANSFORMER
FH	FIRE HYDRANT
FL	FLOWLINE
G/PM	GAS BY PAINT MARK
GS	GAS SERVICE
GW	GUY WIRE
INV	INVERT ELEVATION
LB	LADDER BARS
LS	LANDSCAPED AREA
MCB	METER CAN WITH BIBVALVE
MCHV	METER CAN WITH HOSEBIB AND VALVE
MCSV	METER CAN WITH SPRINKLER VALVE
MDS	METAL DOOR STOP
MH	MANHOLE
MLP	METAL LIGHT POLE WITH 2' CONCRETE BASE
MRL	METAL RAMP LANDING
MSL	METAL STEPS LANDING
OHC(1)	OVERHEAD COMMUNICATION (# OF LINES)
OHE(1)	OVERHEAD ELECTRIC (# OF LINES)
OHM	OVERHEAD ELECTRIC MAST
PB	PARKING BUMPER
PE	PLAYGROUND EQUIPMENT
PLTR	PLANTER
PORT	PORTABLE
PS	PARKING STRIPE
PVC	POLYVINYL CHLORIDE
PVMT	PAVEMENT
RD	ROOF DRAIN
SAS	SANITARY SEWER
SAS/PM	SANITARY SEWER CLEANOUT
SB	SPEED BUMP
SCB	SPRINKLER CONTROL BOX
SGP	STEEL GUARD POST
SHR	STEEL HANDRAIL
SI	STORM INLET
STD	STANDARD
SW	SIDEWALK
SWC	SIDEWALK CULVERT
TA	TOP OF ASPHALT
TC	TOP OF CURB
TCO	TOP OF CONCRETE
TG	TOP OF GRATE
TS	TRAFFIC SIDEWALK
TYP	TYPICAL
UG	UNDERGROUND
UPP	UTILITY PAVING PATCH
VCP	VITRIFIED CLAY PIPE
VG	VALLEY GUTTER
WCR	WHEELCHAIR RAMP
WF	WATER FAUCET
WHB	WATER HOTBOX
WL	WATERLINE
WL/PM	WATERLINE BY PAINT MARK
WMB	WATER METER BOX
WPP	WOOD POWER POLE
WVB	WATER VALVE BOX
*	UTILITY MARKER
[shaded box]	PROPOSED ASPHALT
[gravel box]	PROPOSED GRAVEL BASE COURSE
[stippled box]	PROPOSED CONCRETE
● 25.41	PROPOSED SPOT ELEVATION
+24.86	EXISTING FLOWLINE ELEVATION
—08—	PROPOSED CONTOUR
- - 5008 - -	EXISTING CONTOUR
◄— • • •	PROPOSED FLOWLINE
◄——	PROPOSED DIRECTION OF FLOW
◁——	EXISTING DIRECTION OF FLOW
— - - — - -	RIGHT OF WAY LINE
↕	HIGH POINT
▬ ▪ ▪ ▪ ▬	BASIN BOUNDARY LINE

HIGH MESA Consulting Group
6010-B MIDWAY PARK BLVD. NE
ALBUQUERQUE, NEW MEXICO 87109
PHONE: 505.345.4250 FAX: 505.345.4254
www.highmesacg.com

JEFFREY G. MORTENSEN, NEW MEXICO, 8547, REGISTERED PROFESSIONAL ENGINEER
10-16-2009

P.A.P.A. CHARTER SCHOOL AT BEL AIR ELEMENTARY SCHOOL

NO.	DATE	BY	REVISIONS

PROJECT No.	2008.191.6
DESIGNED BY	J.G.M.
DRAWN BY	C.F.A.
APPROVED BY	J.G.M.
SHEET TITLE	DRAINAGE BASIN MAP

RECEIVED
OCT 29 2009
HYDROLOGY SECTION

File Path: [illegible] Plot Date: 10-16-2009
File Name: 8191160BN_R3.DWG Plot Time: 4:30 pm

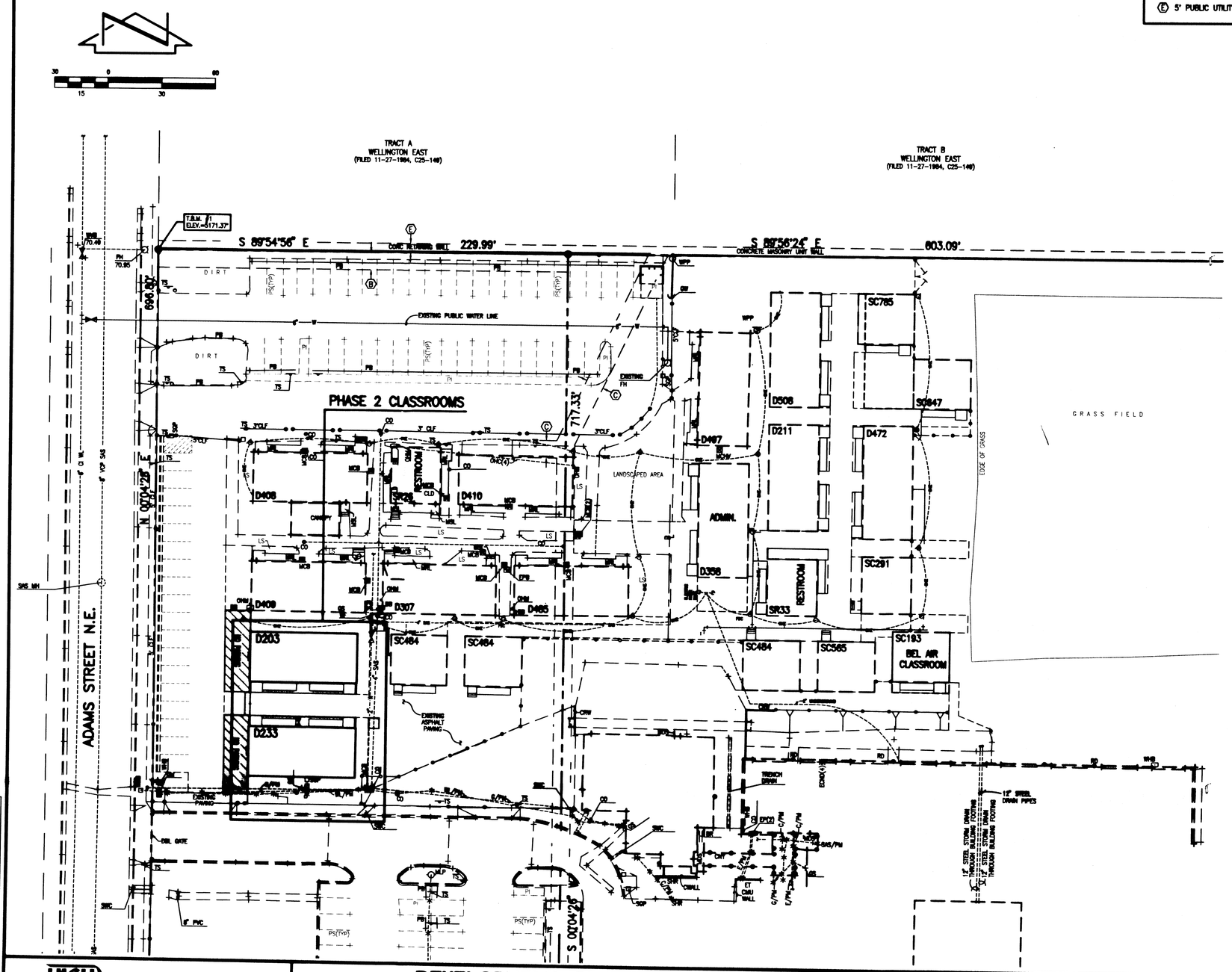

LEGAL DESCRIPTION

TRACTS H AND J, BEL AIR ELEMENTARY SCHOOL, ALBUQUERQUE, NEW MEXICO.

EASEMENT KEYED NOTES

EASEMENTS

- (A) 5' UTILITY EASEMENT GRANTED BY PLAT D2-120B
- (B) 10' PUBLIC WALK EASEMENT GRANTED BY PLAT D2-120B
- (C) APPROXIMATE LOCATION OF 10' UTILITY EASEMENT GRANTED BY PLAT D2-120B
- (D) 5' UTILITY EASEMENT RANTED BY PLAT D1-39 – OFFSITE
- (E) 5' PUBLIC UTILITY EASEMENT GRANTED BY PLAT C25-149 – OFFSITE

BENCHMARKS

PROJECT BENCHMARK

ACS BENCHMARK 9-G17, "□" CUT CHISELED ON TOP OF CONCRETE CURB AT THE WNW CURB RETURN LOCATED IN THE NORTHWEST QUADRANT OF THE INTERSECTION OF CANDELARIA ROAD N.E. AND SAN MATEO BOULEVARD N.E.
ELEVATION = 5204.30 FEET (NGVD 29)

T.B.M. #1

A REBAR WITH CAP STAMPED "LS 7719" TAGGED WITH WASHER STAMPED "NMPS 11184", AT THE NORTHWEST CORNER OF THE PROPERTY, AS SHOWN ON THIS SHEET.
ELEVATION = 5171.37 FEET (NGVD 29)

SURVEY NOTE

THIS IS NOT A BOUNDARY SURVEY. DATA IS SHOWN FOR ORIENTATION ONLY. THE BOUNDARY INFORMATION DEPICTED BY THIS PLAN IS BASED UPON THE BOUNDARY SURVEY PREPARED BY HIGH MESA CONSULTING GROUP, NMPS NO. 11184, DATED 4/16/2007, (JOB NO. 2006.184.4). EXISTING INFORMATION IS BASED UPON RECORD DRAWING PREPARED BY HIGH MESA CONSULTING GROUP, NMPE NO. 8547, DATED 10-16-2008, (JOB NO. 2008.191.6).

LEGEND

AP	ASPHALT PAVEMENT
ARD	ASPHALT RUNDOWN
ASPH	ASPHALT
BB	BREAKER BOX
BLDG	BUILDING
BR	BIKE RACK
C	COMMUNICATION
C&G	CURB AND GUTTER
C/PM	COMMUNICATION BY PAINT MARK
CB	CONCRETE BENCH
CCT	CONCRETE CUT
CI	CAST IRON PIPE
CLD	CENTERLINE OF DOOR
CLDD	CENTERLINE OF DOUBLE DOOR
CLF	CHAINLINK FENCE
CMU	CONCRETE MASONRY UNIT
CNY	CANOPY
CO	SANITARY SEWER CLEANOUT
CONC	CONCRETE
COP	CURB OPENING
CP	CONCRETE PAD
CRW	CONCRETE RETAINING WALL
CWALL	CONCRETE WALL
DBL	DOUBLE
DW	DRIVEWAY
EA	EDGE OF ASPHALT
EC	EDGE OF CONCRETE
ECND	ELECTRIC CONDUIT
EP	ELECTRIC PANEL
EPB	ELECTRIC PULLBOX
ET	ELECTRIC TRANSFORMER
FH	FIRE HYDRANT
FL	FLOWLINE
G/PM	GAS BY PAINT MARK
GS	GAS SERVICE
GW	GUY WIRE
INV	INVERT ELEVATION
LB	LADDER BARS
LS	LANDSCAPED AREA
MCB	METER CAN WITH BIBVALVE
MCHV	METER CAN WITH HOSEBIB AND VALVE
MCSV	METER CAN WITH SPRINKLER VALVE
MDS	METAL DOOR STOP
MH	MANHOLE
MLP	METAL LIGHT POLE WITH 2' CONCRETE BASE
MRL	METAL RAMP LANDING
MSL	METAL STEPS LANDING
OHC(1)	OVERHEAD COMMUNICATION (# OF LINES)
OHE(1)	OVERHEAD ELECTRIC (# OF LINES)
OHM	OVERHEAD ELECTRIC MAST
PB	PARKING BUMPER
PE	PLAYGROUND EQUIPMENT
PLTR	PLANTER
PORT	PORTABLE
PS	PARKING STRIPE
PVC	POLYVINYL CHLORIDE
PVMT	PAVEMENT
RD	ROOF DRAIN
SAS	SANITARY SEWER
SAS/PM	SANITARY SEWER CLEANOUT
SB	SPEED BUMP
SCB	SPRINKLER CONTROL BOX
SGP	STEEL GUARD POST
SHR	STEEL HANDRAIL
SI	STORM INLET
STD	STANDARD
SW	SIDEWALK
SWC	SIDEWALK CULVERT
TA	TOP OF ASPHALT
TC	TOP OF CURB
TCO	TOP OF CONCRETE
TG	TOP OF GRATE
TS	TRAFFIC SIDEWALK
TYP	TYPICAL
UG	UNDERGROUND
UPP	UTILITY PAVING PATCH
VCP	VITRIFIED CLAY PIPE
VG	VALLEY GUTTER
WCR	WHEELCHAIR RAMP
WF	WATER FAUCET
WHB	WATER HOTBOX
WL	WATERLINE
WL/PM	WATERLINE BY PAINT MARK
WMB	WATER METER BOX
WPP	WOOD POWER POLE
WVB	WATER VALVE BOX
*	UTILITY MARKER
	PROPOSED ASPHALT PAVING

SEP 2 2011

File Path: E:\DATA\2011.180.2\DWG | Plot Date: 09-01-2011
File Name: 111802_SH2.DWG | Plot Time: 4:00 pm

HIGH MESA Consulting Group
6010-B MIDWAY PARK BLVD. NE • ALBUQUERQUE, NEW MEXICO 87109
PHONE: 505.345.4250 • FAX: 505.345.4254 • www.highmesacg.com

DEVELOPMENT PLAN (FOR INFORMATION AND ORIENTATION ONLY)
P.A.P.A. CHARTER SCHOOL AT BEL AIR ELEMENTARY SCHOOL
3000 ADAMS NE

DESIGNED BY J.G.M.
DRAWN BY J.Y.R.
APPROVED BY J.G.M.

NO.	DATE	BY	REVISIONS

JOB NO. 2011.180.2
DATE 09-2011
SHEET 2 OF 11

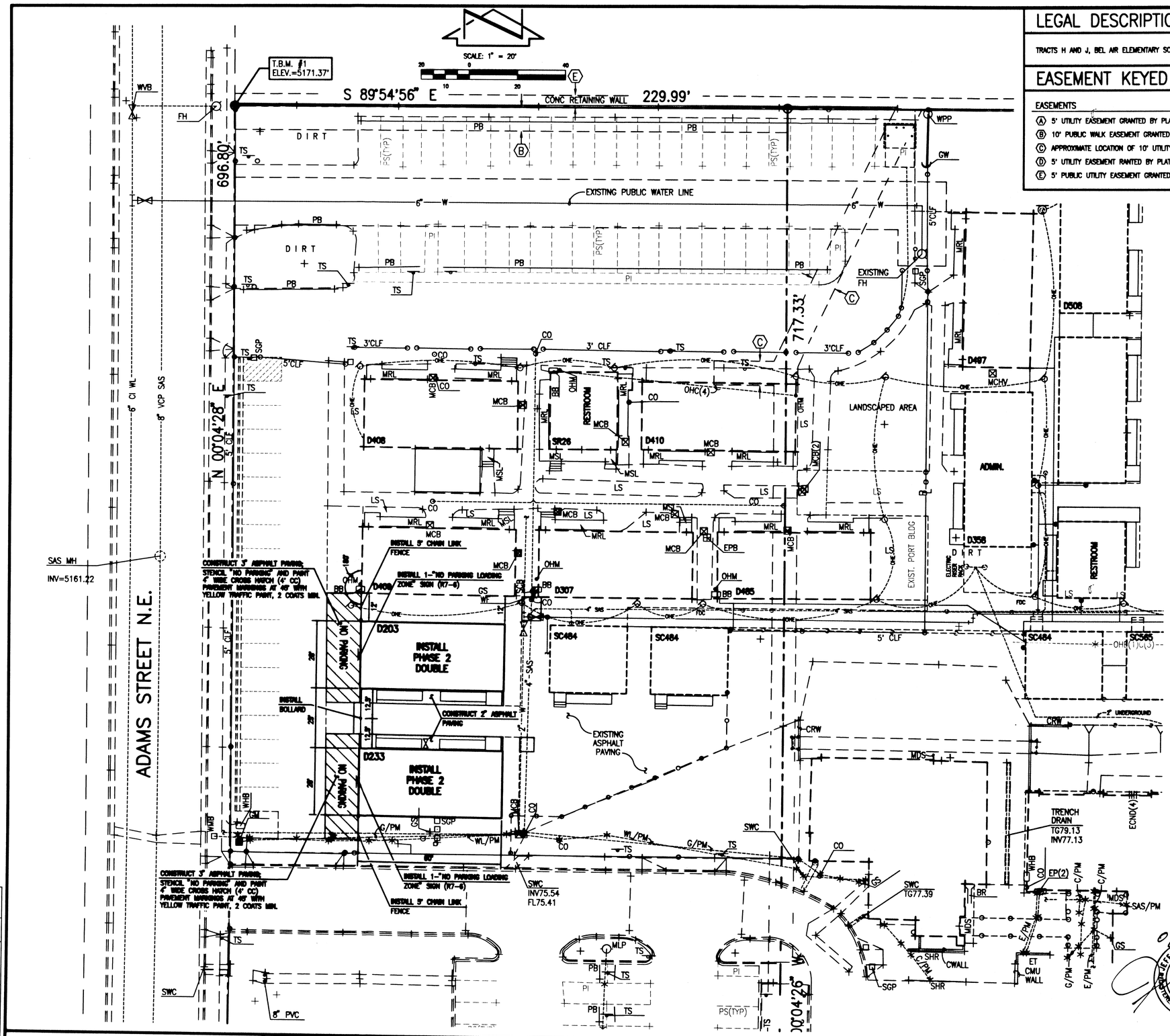

LEGAL DESCRIPTION

TRACTS H AND J, BEL AIR ELEMENTARY SCHOOL, ALBUQUERQUE, NEW MEXICO.

EASEMENT KEYED NOTES

EASEMENTS

- (A) 5' UTILITY EASEMENT GRANTED BY PLAT D2-120B
- (B) 10' PUBLIC WALK EASEMENT GRANTED BY PLAT D2-120B
- (C) APPROXIMATE LOCATION OF 10' UTILITY EASEMENT GRANTED BY PLAT D2-120B
- (D) 5' UTILITY EASEMENT RANTED BY PLAT D1-39 - OFFSITE
- (E) 5' PUBLIC UTILITY EASEMENT GRANTED BY PLAT C25-149 - OFFSITE

BENCHMARKS

PROJECT BENCHMARK

ACS BENCHMARK 9-G17, "□" CUT CHISELED ON TOP OF CONCRETE CURB AT THE WNW CURB RETURN LOCATED IN THE NORTHWEST QUADRANT OF THE INTERSECTION OF CANDELARIA ROAD N.E. AND SAN MATEO BOULEVARD N.E.
ELEVATION = 5204.30 FEET (NGVD 29)

T.B.M. #1

A REBAR WITH CAP STAMPED "LS 7719" TAGGED WITH WASHER STAMPED "NMPS 11184", AT THE NORTHWEST CORNER OF THE PROPERTY, AS SHOWN ON THIS SHEET.
ELEVATION = 5171.37 FEET (NGVD 29)

SURVEY NOTE

THIS IS NOT A BOUNDARY SURVEY. DATA IS SHOWN FOR ORIENTATION ONLY. THE BOUNDARY INFORMATION DEPICTED BY THIS PLAN IS BASED UPON THE BOUNDARY SURVEY PREPARED BY HIGH MESA CONSULTING GROUP, NMPS NO. 11184, DATED 4/16/2007, (JOB NO. 2006.184.4). EXISTING INFORMATION IS BASED UPON RECORD DRAWING PREPARED BY HIGH MESA CONSULTING GROUP, NMPE NO. 8547, DATED 10-16-2009, (JOB NO. 2008.191.6).

LEGEND

AP	ASPHALT PAVEMENT
ARD	ASPHALT RUNDOWN
ASPH	ASPHALT
BB	BREAKER BOX
BLDG	BUILDING
BR	BIKE RACK
C	COMMUNICATION
C&G	CURB AND GUTTER
C/PM	COMMUNICATION BY PAINT MARK
CB	CONCRETE BENCH
CCT	CONCRETE CUT
CI	CAST IRON PIPE
CLD	CENTERLINE OF DOOR
CLDD	CENTERLINE OF DOUBLE DOOR
CLF	CHAINLINK FENCE
CMU	CONCRETE MASONRY UNIT
CNY	CANOPY
CO	SANITARY SEWER CLEANOUT
CONC	CONCRETE
COP	CURB OPENING
CP	CONCRETE PAD
CRW	CONCRETE RETAINING WALL
CWALL	CONCRETE WALL
DBL	DOUBLE
DW	DRIVEWAY
EA	EDGE OF ASPHALT
EC	EDGE OF CONCRETE
ECND	ELECTRIC CONDUIT
EP	ELECTRIC PANEL
EPB	ELECTRIC PULLBOX
ET	ELECTRIC TRANSFORMER
FH	FIRE HYDRANT
FL	FLOWLINE
G/PM	GAS BY PAINT MARK
GS	GAS SERVICE
GW	GUY WIRE
INV	INVERT ELEVATION
LB	LADDER BARS
LS	LANDSCAPED AREA
MCB	METER CAN WITH BIBVALVE
MCHV	METER CAN WITH HOSEBIB AND VALVE
MCSV	METER CAN WITH SPRINKLER VALVE
MDS	METAL DOOR STOP
MH	MANHOLE
MLP	METAL LIGHT POLE WITH 2' CONCRETE BASE
MRL	METAL RAMP LANDING
MSL	METAL STEPS LANDING
OHC(1)	OVERHEAD COMMUNICATION (# OF LINES)
OHE(1)	OVERHEAD ELECTRIC (# OF LINES)
OHM	OVERHEAD ELECTRIC MAST
PB	PARKING BUMPER
PE	PLAYGROUND EQUIPMENT
PLTR	PLANTER
PORT	PORTABLE
PS	PARKING STRIPE
PVC	POLYVINYL CHLORIDE
PVMT	PAVEMENT
RD	ROOF DRAIN
SAS	SANITARY SEWER
SAS/PM	SANITARY SEWER CLEANOUT
SB	SPEED BUMP
SCB	SPRINKLER CONTROL BOX
SGP	STEEL GUARD POST
SHR	STEEL HANDRAIL
SI	STORM INLET
STD	STANDARD
SW	SIDEWALK
SWC	SIDEWALK CULVERT
TA	TOP OF ASPHALT
TC	TOP OF CURB
TCO	TOP OF CONCRETE
TG	TOP OF GRATE
TS	TRAFFIC SIDEWALK
TYP	TYPICAL
UG	UNDERGROUND
UPP	UTILITY PAVING PATCH
VCP	VITRIFIED CLAY PIPE
VG	VALLEY GUTTER
WCR	WHEELCHAIR RAMP
WF	WATER FAUCET
WHB	WATER HOTBOX
WL	WATERLINE
WL/PM	WATERLINE BY PAINT MARK
WMB	WATER METER BOX
WPP	WOOD POWER POLE
WVB	WATER VALVE BOX
*	UTILITY MARKER

DESIGN LEGEND

PROPOSED CONCRETE

PROPOSED ASPHALT PAVING

File Path: E:\MIA\2011.180.2.DWG | Plot Date: 09-01-2011
File Name: 111802_SH3.DWG | Plot Time: 4:00 pm

HIGH MESA Consulting Group
6010-B MIDWAY PARK BLVD. NE • ALBUQUERQUE, NEW MEXICO 87109
PHONE: 505.345.4250 • FAX: 505.345.4254 • www.highmesacg.com

PAVING AND LAYOUT PLAN
P.A.P.A. CHARTER SCHOOL AT BEL AIR ELEMENTARY SCHOOL
3000 ADAMS NE

DESIGNED BY J.G.M.
DRAWN BY J.Y.R.
APPROVED BY J.G.M.

NO.	DATE	BY	REVISIONS

JOB NO. 2011.180.2
DATE 08-2011
SHEET 3 OF 11

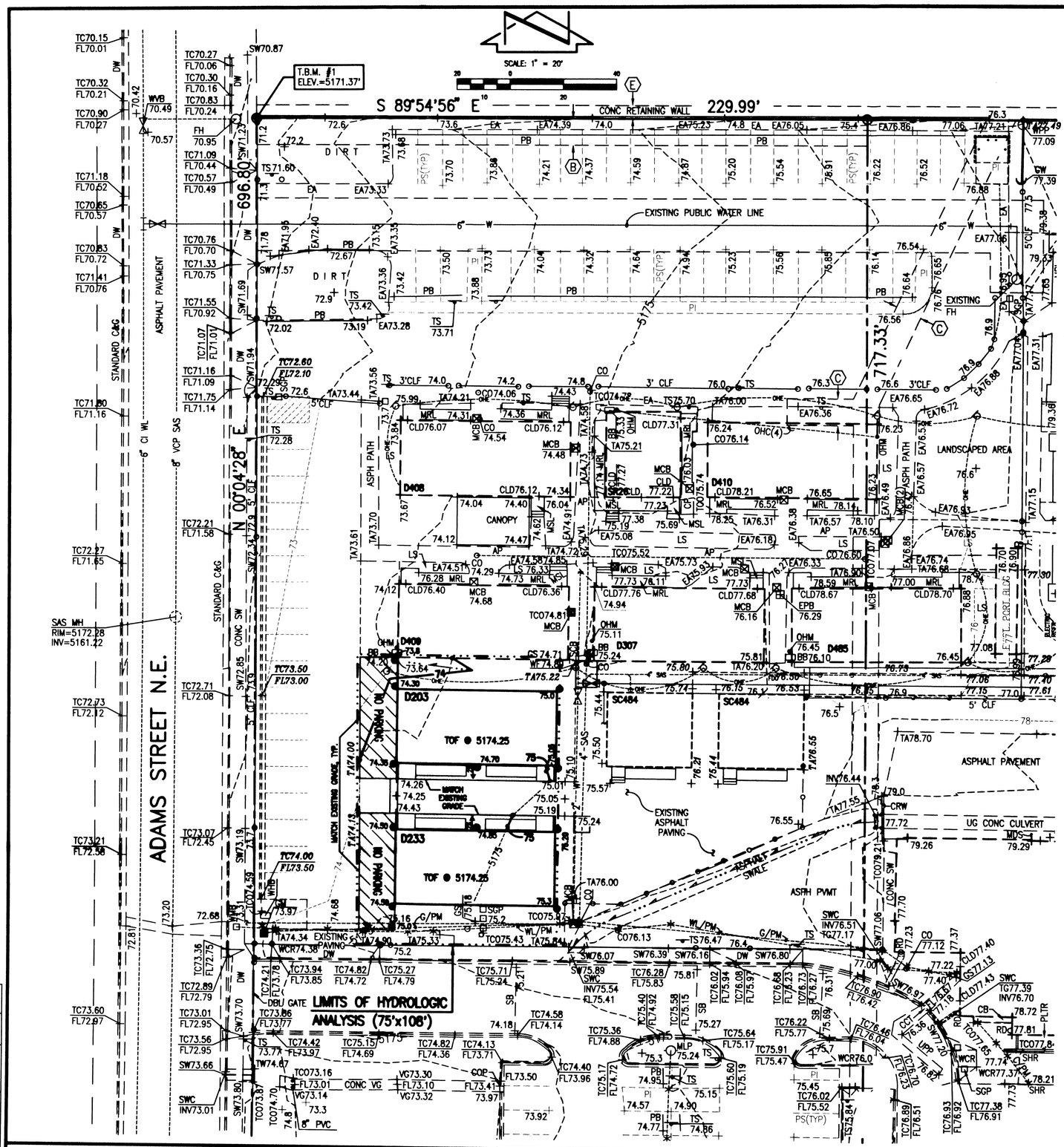

DESIGN GRADING LEGEND:

+76.88	EXISTING ELEVATION FROM PRIOR SURVEY
+76.73	EXISTING SPOT ELEVATION FROM RECORD DATA
● 75.20	PROPOSED SPOT ELEVATION
	EXISTING FLOWLINE
	PROPOSED FLOWLINE
5175	EXISTING CONTOUR
75	PROPOSED CONTOUR
	EXISTING DIRECTION OF FLOW
	PROPOSED DIRECTION OF FLOW
	HIGH POINT / DIVIDE
	PROPOSED CONCRETE
	PROPOSED ASPHALT PAVING

BENCHMARKS

PROJECT BENCHMARK

ACS BENCHMARK 9-G17, "□" CUT CHISELED ON TOP OF CONCRETE CURB AT THE WNW CURB RETURN LOCATED IN THE NORTHWEST QUADRANT OF THE INTERSECTION OF CANDELARIA ROAD N.E. AND SAN MATEO BOULEVARD N.E.
ELEVATION = 5204.30 FEET (NGVD 29)

T.B.M. #1

A REBAR WITH CAP STAMPED "LS 7719" TAGGED WITH WASHER STAMPED "NMPS 11184", AT THE NORTHWEST CORNER OF THE PROPERTY, AS SHOWN ON THIS SHEET.
ELEVATION = 5171.37 FEET (NGVD 29)

SURVEY NOTE

THIS IS NOT A BOUNDARY SURVEY. DATA IS SHOWN FOR ORIENTATION ONLY. THE BOUNDARY INFORMATION DEPICTED BY THIS PLAN IS BASED UPON THE BOUNDARY SURVEY PREPARED BY HIGH MESA CONSULTING GROUP, NMPS NO. 11184, DATED 4/16/2007, (JOB NO. 2006.184.4). EXISTING INFORMATION IS BASED UPON RECORD DRAWING PREPARED BY HIGH MESA CONSULTING GROUP, NMPE NO. 8547, DATED 10-16-2009, (JOB NO. 2008.191.6).

EXISTING LEGEND:

SEE SHEET 2.

CONSTRUCTION NOTES:

1. TWO (2) WORKING DAYS PRIOR TO ANY EXCAVATION, CONTRACTOR MUST CONTACT NEW MEXICO ONE CALL SYSTEM 260-1990 (ALBUQUERQUE AREA), 1-800-321-ALERT(2537) (STATEWIDE), FOR LOCATION OF EXISTING UTILITIES AND ALBUQUERQUE PUBLIC SCHOOLS OR THEIR DESIGNATED SUBSURFACE UTILITY CONSULTANT FOR APS-OWNED UTILITIES.
2. PRIOR TO CONSTRUCTION, THE CONTRACTOR SHALL EXCAVATE AND VERIFY THE HORIZONTAL AND VERTICAL LOCATION OF ALL POTENTIAL OBSTRUCTIONS. SHOULD A CONFLICT EXIST, THE CONTRACTOR SHALL NOTIFY THE ENGINEER IN WRITING SO THAT THE CONFLICT CAN BE RESOLVED WITH A MINIMUM AMOUNT OF DELAY. THE CONTRACTOR SHALL BE RESPONSIBLE FOR ALL INTERPRETATIONS IT MAKES WITHOUT FIRST CONTACTING THE ENGINEER AS REQUIRED ABOVE.
3. ALL WORK ON THIS PROJECT SHALL BE PERFORMED IN ACCORDANCE WITH APPLICABLE FEDERAL, STATE AND LOCAL LAWS, RULES AND REGULATIONS CONCERNING CONSTRUCTION SAFETY AND HEALTH.
4. ALL CONSTRUCTION WITHIN PUBLIC RIGHT-OF-WAY SHALL BE PERFORMED IN ACCORDANCE WITH APPLICABLE CITY OF ALBUQUERQUE STANDARDS AND PROCEDURES.
5. IF ANY UTILITY LINES, PIPELINES, OR UNDERGROUND UTILITY LINES ARE SHOWN ON THESE DRAWINGS, THEY ARE SHOWN IN AN APPROXIMATE MANNER ONLY, AND SUCH LINES MAY EXIST WHERE NONE ARE SHOWN. IF ANY SUCH EXISTING LINES ARE SHOWN, THE LOCATION IS BASED UPON INFORMATION PROVIDED BY THE OWNER OF SAID UTILITY, AND THE INFORMATION MAY BE INCOMPLETE, OR MAY BE OBSOLETE BY THE TIME CONSTRUCTION COMMENCES. THE ENGINEER HAS CONDUCTED ONLY PRELIMINARY INVESTIGATION OF THE LOCATION, DEPTH, SIZE, OR TYPE OF EXISTING UTILITY LINES, PIPELINES, OR UNDERGROUND UTILITY LINES. THIS INVESTIGATION IS NOT CONCLUSIVE, AND MAY NOT BE COMPLETE, THEREFORE, MAKES NO REPRESENTATION PERTAINING THERETO, AND ASSUMES NO RESPONSIBILITY OR LIABILITY THEREFOR. THE CONTRACTOR SHALL INFORM ITSELF OF THE LOCATION OF ANY UTILITY LINE, PIPELINE, OR UNDERGROUND UTILITY LINE IN OR NEAR THE AREA OF THE WORK IN ADVANCE OF AND DURING EXCAVATION WORK. THE CONTRACTOR IS FULLY RESPONSIBLE FOR ANY AND ALL DAMAGE CAUSED BY ITS FAILURE TO LOCATE, IDENTIFY AND PRESERVE ANY AND ALL EXISTING UTILITIES, PIPELINES, AND UNDERGROUND UTILITY LINES. IN PLANNING AND CONDUCTING EXCAVATION, THE CONTRACTOR SHALL COMPLY WITH STATE STATUTES, MUNICIPAL AND LOCAL ORDINANCES, RULES AND REGULATIONS, IF ANY, PERTAINING TO THE LOCATION OF THESE LINES AND FACILITIES.
6. THE DESIGN OF PLANTERS AND LANDSCAPED AREAS IS NOT PART OF THIS PLAN. ALL PLANTERS AND LANDSCAPED AREAS ADJACENT TO THE BUILDING(S) SHALL BE PROVIDED WITH POSITIVE DRAINAGE TO AVOID ANY PONDING ADJACENT TO THE STRUCTURE. FOR CONSTRUCTION DETAILS, REFER TO LANDSCAPING PLAN.

EROSION CONTROL MEASURES:

1. THE CONTRACTOR SHALL ENSURE THAT NO SOIL ERODES FROM THE SITE INTO PUBLIC RIGHT-OF-WAY OR ONTO PRIVATE PROPERTY.
2. THE CONTRACTOR SHALL PROMPTLY CLEAN UP ANY MATERIAL EXCAVATED WITHIN THE PUBLIC RIGHT-OF-WAY SO THAT THE EXCAVATED MATERIAL IS NOT SUSCEPTIBLE TO BEING WASHED DOWN THE STREET.
3. WHEN APPLICABLE, CONTRACTOR SHALL SECURE "TOPSOIL DISTURBANCE PERMIT" FROM THE CITY AND/OR FILE A NOTICE OF INTENT (N.O.I.) WITH THE EPA PRIOR TO BEGINNING CONSTRUCTION.

LEGAL DESCRIPTION

SEE SHEET 2.

EASEMENT KEYED NOTES

SEE SHEET 2.

09-02-2011
JEFFREY G. MORTENSEN
NEW MEXICO
8547
PROFESSIONAL ENGINEER

HIGH MESA Consulting Group
6010-B MIDWAY PARK BLVD. NE • ALBUQUERQUE, NEW MEXICO 87109
PHONE: 505.346.4280 • FAX: 505.346.4254 • www.highmesacg.com

File Path: E:\DATA\2011.180.2\DWG
File Name: 11180.2_SH5.DWG
Plot Date: 08-31-2011
Plot Time: 12:16 pm

GRADING PLAN
P.A.P.A. CHARTER SCHOOL AT BEL AIR ELEMENTARY SCHOOL
3000 ADAMS NE

DESIGNED BY J.G.M.
DRAWN BY J.Y.R.
APPROVED BY J.G.M.

NO.	DATE	BY	REVISIONS

JOB NO. 2011.180.2
DATE 08-2011
SHEET 5 OF 11

DRAINAGE PLAN

I. INTRODUCTION AND EXECUTIVE SUMMARY

THIS PROJECT, GENERALLY LOCATED AT THE NORTHEAST CORNER OF CANDELARIA ROAD NE AND ADAMS STREET NE, REPRESENTS A MODIFICATION TO AN EXISTING SITE WITHIN AN INFILL AREA. THE PROPOSED IMPROVEMENTS CONSIST OF ADDING TWO DOUBLE PORTABLE CLASSROOM BUILDINGS TO THE EXISTING P.A.P.A. CHARTER SCHOOL CAMPUS AT THE NORTHWEST CORNER OF THE BEL-AIR ELEMENTARY SCHOOL SITE. THE PROPOSED DRAINAGE CONCEPT IS TO CONTINUE THE FREE DISCHARGE OF RUNOFF FROM THIS PORTION OF THE SITE, BASIN 7, TO ADAMS STREET NE.

THIS SUBMITTAL IS MADE IN SUPPORT OF FOUNDATION, GRADING AND PAVING PERMITS WITHIN THE JURISDICTION OF THE CITY OF ALBUQUERQUE

II. PROJECT DESCRIPTION

AS SHOWN BY THE VICINITY MAP, THIS PROJECT SITE IS LOCATED AT THE NORTHWEST CORNER OF THE BEL-AIR ELEMENTARY SCHOOL SITE AND COMPRISES A PORTION OF THE P.A.P.A. CHARTER SCHOOL CAMPUS. THE CURRENT LEGAL DESCRIPTION IS TRACTS H AND J, BEL-AIR ELEMENTARY SCHOOL, ALBUQUERQUE, NEW MEXICO. AS SHOWN BY PANELS 351 & 352 OF 825 OF THE NATIONAL FLOOD INSURANCE PROGRAM FLOOD INSURANCE RATE MAPS PUBLISHED BY FEMA FOR BERNALILLO COUNTY, NEW MEXICO, SEPTEMBER 26, 2008, THIS SITE DOES NOT LIE WITHIN A DESIGNATED FLOOD HAZARD ZONE. A PORTION OF THE OVERALL SCHOOL SITE DRAINS TO THE DESIGNATED FLOOD HAZARD (AO) ZONE CONTAINED WITHIN CANDELARIA ROAD NE. THIS PROJECT, HOWEVER, WILL NOT CONTRIBUTE RUNOFF TO THE FLOOD HAZARD ZONE AND INSTEAD DISCHARGES TO ADAMS STREET, FLOWING NORTH TO ULTIMATELY ENTER THE HAHN ARROYO WHERE CAPACITY IS NOT AN ISSUE.

III. BACKGROUND DOCUMENTS AND RESEARCH

THE PREPARATION OF THIS SUBMITTAL RELIED UPON THE FOLLOWING DOCUMENT:

- DRAINAGE SUBMITTAL FOR THE P.A.P.A. CHARTER SCHOOL AT BEL-AIR ELEMENTARY SCHOOL PREPARED BY HIGH MESA CONSULTING GROUP, NMPS NO. 8547, DATED 10-16-2009 AND CERTIFIED 12-09-2009. THE SUBMITTAL PROVIDES THE BASIS FOR THE EXISTING CONDITION FOR THIS PORTION OF THE P.A.P.A CHARTER SCHOOL CAMPUS. IN ADDITION, THE 2009 SUBMITTAL IDENTIFIED THAT THE PROPOSED IMPROVEMENTS LIE WITHIN BASIN 7 ON THE CHARTER SCHOOL CAMPUS. BASIN 7 IS ALLOWED FREE DISCHARGE TO ADAMS STREET NE; FROM THIS POINT THE RUNOFF FLOWS NORTH TO ULTIMATELY OUTFALL TO THE HAHN ARROYO.

IV. EXISTING CONDITIONS

THIS PROJECT SITE IS LOCATED ON THE P.A.P.A. CHARTER SCHOOL CAMPUS AT THE NORTHWEST CORNER OF THE BEL-AIR ELEMENTARY SCHOOL SITE. THE PROJECT LIES ENTIRELY WITHIN BASIN 7 CONFIRMED BY THE 2009 DRAINAGE SUBMITTAL. THIS PORTION OF THE SITE CONSISTS PRIMARILY OF BARE GROUND COVER, WITH A PAVED ACCESS WALKWAY. RUNOFF GENERATED BY THE PROJECT SITE DRAINS FROM EAST TO WEST, DISCHARGING ONTO THE ADJACENT PAVED PARKING LOT. FROM THIS POINT, THE RUNOFF FLOWS NORTH ALONG THE PARKING LOT CURB AND GUTTER TO FREE DISCHARGE TO ADAMS STREET NE VIA EXISTING DRIVEPAD. RUNOFF THEN FLOWS NORTH WITHIN ADAMS STREET NE, A FULLY DEVELOPED PUBLIC STREET WITH CURB AND GUTTER AND ASPHALT PAVEMENT, TO ULTIMATELY DISCHARGE TO THE HAHN ARROYO, A PUBLIC DRAINAGE CHANNEL.

OFFSITE FLOWS DO NOT ENTER THE PROJECT SITE, AS CONFIRMED BY THE 2009 DRAINAGE SUBMITTAL. ONSITE RUNOFF FROM SCHOOL IMPROVEMENTS UPSTREAM SURFACE DRAIN ACROSS THE PROJECT SITE TO FREE DISCHARGE INTO ADAMS STREET NE AND ULTIMATELY OUTFALL TO THE HAHN ARROYO.

V. DEVELOPED CONDITIONS

PROPOSED IMPROVEMENTS WITHIN THE PROJECT SITE CONSIST OF THE ADDITION OF TWO (2) DOUBLE PORTABLE CLASSROOM BUILDINGS ALONG WITH ADDITIONAL ASPHALT PAVING WITHIN BASIN 7. RUNOFF GENERATED BY THE NEW IMPROVEMENTS WILL CONTINUE TO DRAIN FROM EAST TO WEST, DISCHARGING ONTO THE EXISTING PARKING LOT. RUNOFF PROCEEDS TO FLOW NORTH ALONG THE EXISTING PARKING LOT CURB AND GUTTER TO FREE DISCHARGE INTO ADAMS STREET NE VIA EXISTING DRIVEPAD. FROM THIS POINT, THE RUNOFF FLOWS TO HAHN ARROYO AS DESCRIBED ABOVE.

THERE WILL BE A MINOR INCREASE IN IMPERVIOUS AREA DUE TO THE PROPOSED IMPROVEMENTS, RESULTING IN A MINOR INCREASE IN PEAK RATE OF DISCHARGE AND VOLUME OF RUNOFF FROM THE PROJECT SITE.

VI. GRADING PLAN

THE GRADING PLAN SHOWS 1.) EXISTING GRADES INDICATED BY SPOT ELEVATIONS AND CONTOURS AT 1'0" INTERVALS AS TAKEN FROM THE DRAINAGE CERTIFICATION DATED 12-09-2009, 2) PROPOSED GRADES INDICATED BY SPOT ELEVATIONS AND CONTOURS AT 1'-0" INTERVALS, 3) THE LIMIT AND CHARACTER OF EXISTING AND PROPOSED IMPROVEMENTS, AND 4) CONTINUITY BETWEEN EXISTING AND PROPOSED GRADES.

VII. CALCULATIONS

CALCULATIONS ANALYZING THE EXISTING AND DEVELOPED CONDITIONS FOR THE 100-YEAR, 6-HOUR RAINFALL EVENT HAVE BEEN PREPARED FOR THAT PORTION OF THE PROJECT SITE AFFECTED BY THE PROPOSED IMPROVEMENTS. THE PROCEDURE FOR 40 ACRE AND SMALLER BASINS, AS SET FORTH IN THE REVISION OF SECTION 22.2, HYDROLOGY OF THE DEVELOPMENT PROCESS MANUAL, VOLUME 2, DESIGN CRITERIA, DATED JANUARY 1993, HAS BEEN USED TO QUANTIFY THE PEAK RATE OF DISCHARGE AND VOLUME OF RUNOFF GENERATED. AS DEMONSTRATED BY THESE CALCULATIONS, THE PROPOSED IMPROVEMENTS WILL RESULT IN A MINOR INCREASE IN PEAK RATE OF DISCHARGE AND VOLUME OF RUNOFF GENERATED BY THIS PROJECT.

VII. CONCLUSIONS

THE FOLLOWING CONCLUSIONS ARE PRESENTED AS A RESULT OF THE EVALUATIONS AND ANALYSES CONTAINED HEREIN:

1. THE IMPROVEMENTS PROPOSED HEREIN REPRESENT MODIFICATIONS TO AN EXISTING SITE WITHIN AN INFILL AREA
2. THE PROJECT SITE LIES WITHIN BASIN 7 CONFIRMED BY THE 2009 DRAINAGE SUBMITTAL
3. BASIN 7 IS ALLOWED FREE DISCHARGE IN ACCORDANCE WITH THE 2009 DRAINAGE SUBMITTAL
4. THE PROPOSED IMPROVEMENTS WILL MAINTAIN THE EXISTING DRAINAGE PATTERNS OF THIS PORTION OF THE SITE
5. A MINOR INCREASE IN THE PEAK RATE OF DISCHARGE AND VOLUME OF RUNOFF GENERATED BY THE PROJECT SITE IS EXPECTED AS A RESULT OF THE PROPOSED IMPROVEMENTS
6. THE PROPOSED IMPROVEMENTS DO NOT LIE WITHIN A DESIGNATED FLOOD HAZARD ZONE AND WILL NOT IMPACT THE DESIGNATED FLOOD HAZARD ZONE WITHIN CANDELARIA ROAD NE
7. THE PROPOSED IMPROVEMENTS WILL NOT ADVERSELY IMPACT DOWNSTREAM PROPERTIES OR DOWNSTREAM DRAINAGE CONDITIONS

CALCULATIONS

I. SITE CHARACTERISTICS

A. PRECIPITATION ZONE = 2

B. $P_{100,\,6\,HR} = P_{360} =$ 2.35

C. TOTAL PROJECT AREA (A_T) = 8,100 SF
0.19 AC

D. LAND TREATMENTS

1. EXISTING LAND TREATMENT

TREATMENT	AREA (SF/AC)	%
C	7,150 / 0.17	89
D	950 / 0.02	11

2. DEVELOPED LAND TREATMENT

TREATMENT	AREA (SF/AC)	%
C	1,720 / 0.04	21
D	6,380 / 0.15	79

II. HYDROLOGY

A. EXISTING CONDITION

1. VOLUME

$E_W = (E_A A_A + E_B A_B + E_C A_C + E_D A_D)/A_T$

$E_W =$ (0.53*0.00) + (0.78*0.00) + (1.13*0.17) + (2.12*0.02)/0.19 = 1.23 IN

$V_{100,6\,HR} = (E_W/12)A_T =$ (1.23/12)0.19 = 0.0195 AC-FT = 850 CF

2. PEAK DISCHARGE

$Q_P = Q_{PA}A_A + Q_{PB}A_B + Q_{PC}A_C + Q_{PD}A_D$

$Q_P = Q_{100} =$ (1.56 * 0.00) +(2.28 * 0.00) +(3.14 * 0.17) + (4.70 * 0.02) = 0.6 CFS

B. DEVELOPED CONDITION

1. VOLUME

$E_W = (E_A A_A + E_B A_B + E_C A_C + E_D A_D)/A_T$

$E_W =$ (0.53*0.00) + (0.78*0.00) + (1.13*0.04) + (2.12*0.15)/0.19 = 1.91 IN

$V_{100,\,6\,HR} = (E_W/12)A_T =$ (1.91/12)0.19 = 0.0302 AC-FT = 1,320 CF

2. PEAK DISCHARGE

$Q_P = Q_{PA}A_A + Q_{PB}A_B + Q_{PC}A_C + Q_{PD}A_D$

$Q_P = Q_{100} =$ (1.56*0.00) + (2.28*0.00) + (3.14*0.04) + (4.70*0.15) = 0.8 CFS

C. COMPARISON

1. VOLUME

$\Delta V_{100,\,6\,HR} =$ 1320 - 850 = 470 CF (INCREASE)

2. PEAK DISCHARGE

$\Delta Q_{100} =$ 0.8 - 0.6 = 0.2 CFS (INCREASE)

CONSTRUCTION NOTES:

1. TWO (2) WORKING DAYS PRIOR TO ANY EXCAVATION, CONTRACTOR MUST CONTACT NEW MEXICO ONE CALL SYSTEM 260-1990 (ALBUQUERQUE AREA), 1-800-321-ALERT(2537) (STATEWIDE), FOR LOCATION OF EXISTING UTILITIES AND ALBUQUERQUE PUBLIC SCHOOLS OR THEIR DESIGNATED SUBSURFACE UTILITY CONSULTANT FOR APS-OWNED UTILITIES.
2. PRIOR TO CONSTRUCTION, THE CONTRACTOR SHALL EXCAVATE AND VERIFY THE HORIZONTAL AND VERTICAL LOCATION OF ALL POTENTIAL OBSTRUCTIONS. SHOULD A CONFLICT EXIST, THE CONTRACTOR SHALL NOTIFY THE ENGINEER IN WRITING SO THAT THE CONFLICT CAN BE RESOLVED WITH A MINIMUM AMOUNT OF DELAY. THE CONTRACTOR SHALL BE RESPONSIBLE FOR ALL INTERPRETATIONS IT MAKES WITHOUT FIRST CONTACTING THE ENGINEER AS REQUIRED ABOVE.
3. ALL WORK ON THIS PROJECT SHALL BE PERFORMED IN ACCORDANCE WITH APPLICABLE FEDERAL, STATE AND LOCAL LAWS, RULES AND REGULATIONS CONCERNING CONSTRUCTION SAFETY AND HEALTH.
4. ALL CONSTRUCTION WITHIN PUBLIC RIGHT-OF-WAY SHALL BE PERFORMED IN ACCORDANCE WITH APPLICABLE CITY OF ALBUQUERQUE STANDARDS AND PROCEDURES.
5. IF ANY UTILITY LINES, PIPELINES, OR UNDERGROUND UTILITY LINES ARE SHOWN ON THESE DRAWINGS, THEY ARE SHOWN IN AN APPROXIMATE MANNER ONLY, AND SUCH LINES MAY EXIST WHERE NONE ARE SHOWN. IF ANY SUCH EXISTING LINES ARE SHOWN, THE LOCATION IS BASED UPON INFORMATION PROVIDED BY THE OWNER OF SAID UTILITY, AND THE INFORMATION MAY BE INCOMPLETE, OR MAY BE OBSOLETE BY THE TIME CONSTRUCTION COMMENCES. THE ENGINEER HAS CONDUCTED ONLY PRELIMINARY INVESTIGATION OF THE LOCATION, DEPTH, SIZE, OR TYPE OF EXISTING UTILITY LINES, PIPELINES, OR UNDERGROUND UTILITY LINES. THIS INVESTIGATION IS NOT CONCLUSIVE, AND MAY NOT BE COMPLETE, THEREFORE, MAKES NO REPRESENTATION PERTAINING THERETO, AND ASSUMES NO RESPONSIBILITY OR LIABILITY THEREFOR. THE CONTRACTOR SHALL INFORM ITSELF OF THE LOCATION OF ANY UTILITY LINE, PIPELINE, OR UNDERGROUND UTILITY LINE IN OR NEAR THE AREA OF THE WORK IN ADVANCE OF AND DURING EXCAVATION WORK. THE CONTRACTOR IS FULLY RESPONSIBLE FOR ANY AND ALL DAMAGE CAUSED BY ITS FAILURE TO LOCATE, IDENTIFY AND PRESERVE ANY AND ALL EXISTING UTILITIES, PIPELINES, AND UNDERGROUND UTILITY LINES. IN PLANNING AND CONDUCTING EXCAVATION, THE CONTRACTOR SHALL COMPLY WITH STATE STATUTES, MUNICIPAL AND LOCAL ORDINANCES, RULES AND REGULATIONS, IF ANY, PERTAINING TO THE LOCATION OF THESE LINES AND FACILITIES.
6. THE DESIGN OF PLANTERS AND LANDSCAPED AREAS IS NOT PART OF THIS PLAN. ALL PLANTERS AND LANDSCAPED AREAS ADJACENT TO THE BUILDING(S) SHALL BE PROVIDED WITH POSITIVE DRAINAGE TO AVOID ANY PONDING ADJACENT TO THE STRUCTURE. FOR CONSTRUCTION DETAILS, REFER TO LANDSCAPING PLAN.

EROSION CONTROL MEASURES:

1. THE CONTRACTOR SHALL ENSURE THAT NO SOIL ERODES FROM THE SITE INTO PUBLIC RIGHT-OF-WAY OR ONTO PRIVATE PROPERTY.
2. THE CONTRACTOR SHALL PROMPTLY CLEAN UP ANY MATERIAL EXCAVATED WITHIN THE PUBLIC RIGHT-OF-WAY SO THAT THE EXCAVATED MATERIAL IS NOT SUSCEPTIBLE TO BEING WASHED DOWN THE STREET.
3. WHEN APPLICABLE, CONTRACTOR SHALL SECURE "TOPSOIL DISTURBANCE PERMIT" FROM THE CITY AND/OR FILE A NOTICE OF INTENT (N.O.I.) WITH THE EPA PRIOR TO BEGINNING CONSTRUCTION.

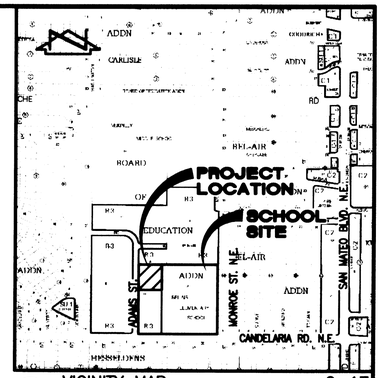

E5 VICINITY MAP G-17
SCALE: 1" = 750'

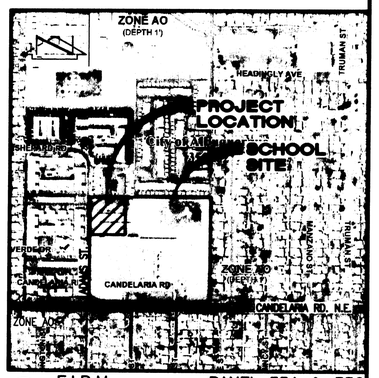

E5 F.I.R.M. PANEL 351 & 352 OF 825
SCALE: 1" = 500'
DATE: 9-26-2008

LEGAL DESCRIPTION

TRACTS H AND J, BEL AIR ELEMENTARY SCHOOL, ALBUQUERQUE, NEW MEXICO.

BENCHMARKS

PROJECT BENCHMARK

ACS BENCHMARK 9-G17, "□" CUT CHISELED ON TOP OF CONCRETE CURB AT THE WNW CURB RETURN LOCATED IN THE NORTHWEST QUADRANT OF THE INTERSECTION OF CANDELARIA ROAD N.E. AND SAN MATEO BOULEVARD N.E.
ELEVATION = 5204.30 FEET (NGVD 29)

T.B.M. #1

A REBAR WITH CAP STAMPED "LS 7719" TAGGED WITH WASHER STAMPED "NMPS 11184", AT THE NORTHWEST CORNER OF THE PROPERTY, AS SHOWN ON SHEET 2.
ELEVATION = 5171.37 FEET (NGVD 29)

09-02-2011

JEFFREY G. MORTENSEN NEW MEXICO 8547 REGISTERED PROFESSIONAL ENGINEER

File Path: E:\DATA\2011.180.2\DWG\ File Name: 111802_SH6.DWG | Plot Date: 09-01-2011 Plot Time: 4:22 pm

HIGH MESA Consulting Group
6010-B MIDWAY PARK BLVD. NE • ALBUQUERQUE, NEW MEXICO 87109
PHONE: 505.345.4250 • FAX: 505.345.4254 • www.highmesacg.com

DRAINAGE PLAN AND CALCULATIONS
P.A.P.A. CHARTER SCHOOL AT BEL AIR ELEMENTARY SCHOOL
3000 ADAMS NE

DESIGNED BY J.G.M.
DRAWN BY J.Y.R.
APPROVED BY J.G.M.

NO.	DATE	BY

JOB NO. 2011.180.2
DATE 08-2011
SHEET 6 OF 11

RECEIVED
MAR 28 2012
HYDROLOGY SECTION

ENGINEER'S CERTIFICATION

I, JEFFREY G. MORTENSEN, NMPE 8547, OF THE FIRM HIGH MESA CONSULTING GROUP, HEREBY CERTIFY THAT THIS PHASE II PROJECT HAS BEEN GRADED, DRAINED AND CONSTRUCTED IN SUBSTANTIAL COMPLIANCE WITH AND IN ACCORDANCE WITH THE DESIGN INTENT OF THE APPROVED PLAN DATED 09-02-2011. THE RECORD INFORMATION EDITED ONTO THE ORIGINAL DESIGN DOCUMENT HAS BEEN OBTAINED BY ME OR PERSONNEL UNDER MY DIRECT SUPERVISION AS SUPPLEMENTAL SITE DATA COMBINED WITH RECORD INFORMATION OBTAINED FROM THE AS-BUILT SURVEY DATED 12-19-2011 PERFORMED UNDER THE DIRECT SUPERVISION OF CHARLES G. CALA, JR., NMPS 11184, OF THE FIRM HIGH MESA CONSULTING GROUP AND IS TRUE AND CORRECT TO THE BEST OF MY KNOWLEDGE AND BELIEF. THIS CERTIFICATION IS SUBMITTED TO DOCUMENT COMPLETION OF THOSE IMPROVEMENTS IDENTIFIED ON THE APPROVED PLAN FOR THE OWNER AND CITY OF ALBUQUERQUE, TO SUPPORT A REQUEST FOR PERMANENT CERTIFICATE OF OCCUPANCY, AND TO SATISFY CONDITIONS OF GRADING AND DRAINAGE APPROVAL.

THE RECORD INFORMATION PRESENTED HEREON IS NOT NECESSARILY COMPLETE AND INTENDED ONLY TO VERIFY SUBSTANTIAL COMPLIANCE OF THE GRADING AND DRAINAGE AND SPECIFIC LIMITED ASPECTS OF THIS PROJECT. THIS CERTIFICATION DOES NOT ADDRESS ADA COMPLIANCE WHICH IS BEYOND THE SCOPE OF GRADING AND DRAINAGE. THOSE RELYING ON THIS RECORD DOCUMENT ARE ADVISED TO OBTAIN INDEPENDENT VERIFICATION OF ITS ACCURACY BEFORE USING IT FOR ANY OTHER PURPOSE.

JEFFREY G. MORTENSEN, NMPE 8547

03-22-2012
DATE

REGISTERED PROFESSIONAL ENGINEER JEFFREY G. MORTENSEN NEW MEXICO 8547

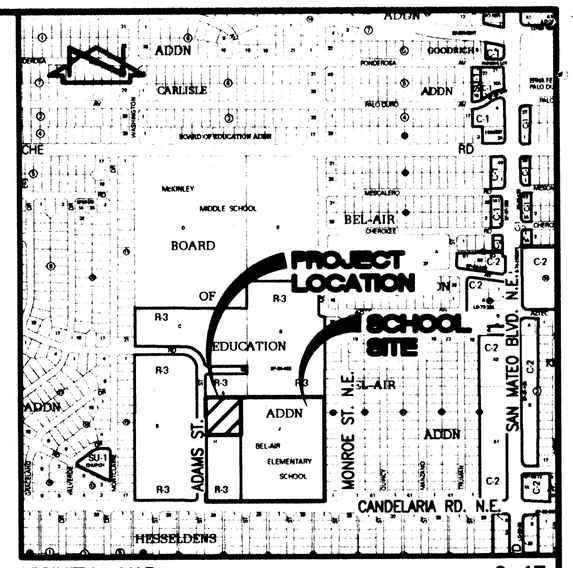

VICINITY MAP
SCALE: 1" = 750' (APPROX.)

G-17

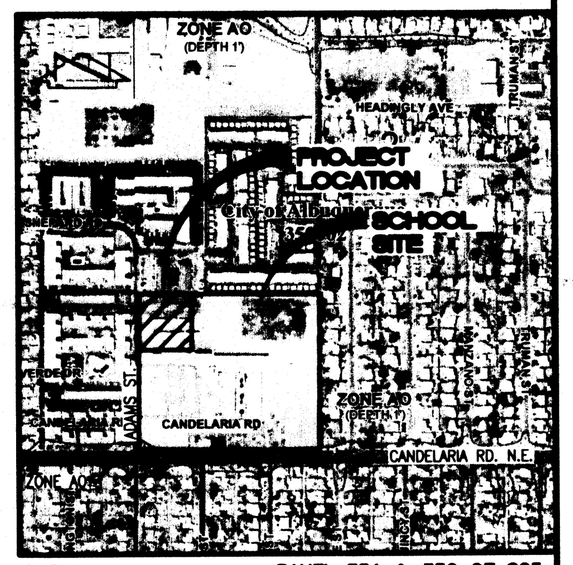

F.I.R.M.
SCALE: 1" = 500' (APPROX.)

PANEL 351 & 352 OF 825
DATED 09/26/2008

INDEX OF DRAWINGS

SHEET	DESCRIPTION
1 OF 11	COVER SHEET, VICINITY MAP, GENERAL NOTES, LEGEND AND INDEX OF DRAWINGS
2 OF 11	DEVELOPMENT PLAN (FOR ORIENTATION ONLY)
3 OF 11	PAVING AND LAYOUT PLAN
5 OF 11	GRADING PLAN
6 OF 11	DRAINAGE PLAN AND CALCULATIONS
10 OF 11	APS PORTABLE CLASSROOM FOUNDATION PLAN

LEGAL DESCRIPTION

TRACTS H AND J, BEL AIR ELEMENTARY SCHOOL, ALBUQUERQUE, NEW MEXICO.

BENCHMARKS

PROJECT BENCHMARK

ACS BENCHMARK 9-G17, "□" CUT CHISELED ON TOP OF CONCRETE CURB AT THE WNW CURB RETURN LOCATED IN THE NORTHWEST QUADRANT OF THE INTERSECTION OF CANDELARIA ROAD N.E. AND SAN MATEO BOULEVARD N.E.
ELEVATION = 5204.30 FEET (NGVD 29)

T.B.M. #1

A REBAR WITH CAP STAMPED "LS 7719" TAGGED WITH WASHER STAMPED "NMPS 11184", AT THE NORTHWEST CORNER OF THE PROPERTY, AS SHOWN ON SHEET 2.
ELEVATION = 5171.37 FEET (NGVD 29)

HIGH MESA Consulting Group
6010-B MIDWAY PARK BLVD. NE • ALBUQUERQUE, NEW MEXICO 87109
PHONE: 505.345.4250 • FAX: 505.345.4254 • www.highmesacg.com

DRAINAGE CERTIFICATION
P.A.P.A. CHARTER SCHOOL AT BEL AIR ELEMENTARY SCHOOL - PHASE 2

DESIGNED BY J.G.M.
DRAWN BY E.J.S.
APPROVED BY J.G.M.

NO.	DATE	BY	REVISIONS

JOB NO. 2011.180.2
DATE 03-2012
SHEET 1 OF 1

File Path: P:\DATA\2011.180.2\DWG\RECORD\ | Plot Date: 03-22-2012
File Name: 111802_SMALL.DWG | Plot Time: 2:52 pm

⚠ RECORD DRAWING

CONSTRUCTION PLANS
for
P.A.P.A. CHARTER SCHOOL
AT
BEL AIR ELEMENTARY SCHOOL – PHASE 2

3000 ADAMS N.E.
ALBUQUERQUE, NEW MEXICO
SEPTEMBER, 2011

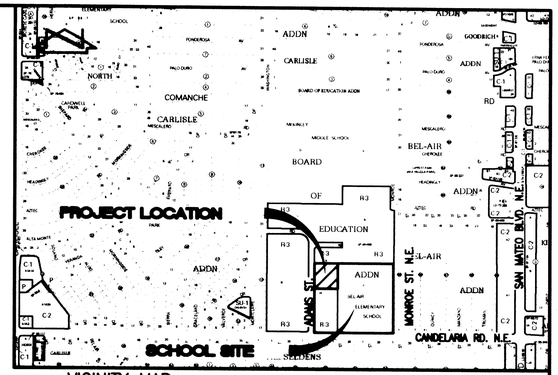

E5 VICINITY MAP G-17
SCALE: 1" = 750'

◦ LEGEND ◦

MATERIALS
- CONCRETE
- RIP-RAP

LINES
- SUBDIVISION BOUNDARY
- PROPERTY LINE (PLAN)
- PROPERTY LINE (SECTION)
- CENTERLINE
- EASEMENT LINE
- MATCH LINE
- SECTION CUT LINE (A A)

EARTHWORK

	EXISTING	NEW
CONTOUR LINE	25	25
SPOT ELEVATION	⊕	
PROJECT / PHASE BOUNDARY		
FLOWLINE		
DIRECTION OF FLOW		

MISCELLANEOUS UTILITIES
- GAS LINE (G)
- UNDERGROUND TELEPHONE (UT)
- UNDERGROUND ELECTRICAL (UE)
- STORM DRAIN (SD)
- STORM DRAIN MANHOLE
- STORM DRAIN INLET

SANITARY SEWER
- SANITARY SEWER LINE (SAS)
- SANITARY SEWER MANHOLE
- SAS SERVICE CONNECTIONS
- SAS CAP OR PLUG
- ENCASEMENT

WATER
- WATER LINE (W)
- WATER SERVICE CONNECTIONS
- GATE VALVE
- FIRE HYDRANT
- BUTTERFLY VALVE
- REDUCER
- WATER PRESSURE ZONE BOUNDARY

WATER FITTINGS
- CAPS AND PLUGS
- ELBOW
- CROSS
- TEE

MISCELLANEOUS
- CHAINLINK FENCE
- FIELD FENCE
- COMMON YARD WALL
- RETAINING WALL
- POWER OR TELEPHONE POLE

⚠ ENGINEER'S CERTIFICATION

I, JEFFREY G. MORTENSEN, NMPE 8547, OF THE FIRM HIGH MESA CONSULTING GROUP, HEREBY CERTIFY THAT THIS PHASE II PROJECT HAS BEEN GRADED, DRAINED AND CONSTRUCTED IN SUBSTANTIAL COMPLIANCE WITH AND IN ACCORDANCE WITH THE DESIGN INTENT OF THE APPROVED PLAN DATED 09-02-2011. THE RECORD INFORMATION EDITED ONTO THE ORIGINAL DESIGN DOCUMENT HAS BEEN OBTAINED BY ME OR PERSONNEL UNDER MY DIRECT SUPERVISION AS SUPPLEMENTAL SITE DATA COMBINED WITH RECORD INFORMATION OBTAINED FROM THE AS-BUILT SURVEY DATED 12-19-2011 PERFORMED UNDER THE DIRECT SUPERVISION OF CHARLES G. CALA, JR., NMPS 11184, OF THE FIRM HIGH MESA CONSULTING GROUP AND IS TRUE AND CORRECT TO THE BEST OF MY KNOWLEDGE AND BELIEF. THIS CERTIFICATION IS SUBMITTED TO DOCUMENT COMPLETION OF THOSE IMPROVEMENTS IDENTIFIED ON THE APPROVED PLAN FOR THE OWNER AND CITY OF ALBUQUERQUE, TO SUPPORT A REQUEST FOR PERMANENT CERTIFICATE OF OCCUPANCY, AND TO SATISFY CONDITIONS OF GRADING AND DRAINAGE APPROVAL.

THE RECORD INFORMATION PRESENTED HEREON IS NOT NECESSARILY COMPLETE AND INTENDED ONLY TO VERIFY SUBSTANTIAL COMPLIANCE OF THE GRADING AND DRAINAGE AND SPECIFIC LIMITED ASPECTS OF THIS PROJECT. THIS CERTIFICATION DOES NOT ADDRESS ADA COMPLIANCE WHICH IS BEYOND THE SCOPE OF GRADING AND DRAINAGE. THOSE RELYING ON THIS RECORD DOCUMENT ARE ADVISED TO OBTAIN INDEPENDENT VERIFICATION OF ITS ACCURACY BEFORE USING IT FOR ANY OTHER PURPOSE.

JEFFREY G. MORTENSEN, NMPE 8547

03-22-2012
DATE

JEFFREY G. MORTENSEN NEW MEXICO 8547 REGISTERED PROFESSIONAL ENGINEER

INDEX OF DRAWINGS

SHEET	DESCRIPTION
1	COVER SHEET, VICINITY MAP, GENERAL NOTES, LEGEND AND INDEX OF DRAWINGS
2	DEVELOPMENT PLAN
3	PAVING AND LAYOUT PLAN
4	PAVING SECTIONS AND DETAILS
5	GRADING PLAN
6	DRAINAGE PLAN AND CALCULATIONS
7	UTILITY SITE PLAN
8	PORTABLE CLASSROOM UTILITY CONNECTION DETAILS
9	OVERHEAD UTILITY PLAN
10	APS PORTABLE CLASSROOM FOUNDATION PLAN
11	TYPICAL APS PORTABLE CLASSROOMS RAMPS AND STAIRS

GENERAL NOTES:

1. ALL WORK DETAILED ON THESE PLANS TO BE PERFORMED UNDER CONTRACT SHALL, EXCEPT AS OTHERWISE STATED OR PROVIDED FOR HEREON, BE CONSTRUCTED IN ACCORDANCE WITH THE NEW MEXICO STANDARD SPECIFICATIONS FOR PUBLIC WORKS CONSTRUCTION – 1987, PUBLISHED BY THE NEW MEXICO CHAPTER AMERICAN PUBLIC WORKS ASSOCIATION. (REVISED 12/06)
2. TWO (2) WORKING DAYS PRIOR TO ANY EXCAVATION, CONTRACTOR MUST CONTACT NEW MEXICO ONE CALL SYSTEM, 260-1990, (ALBUQUERQUE AREA) 1-800-321-ALERT (2537) (STATEWIDE) FOR LOCATION OF EXISTING PUBLIC UTILITIES AND ALBUQUERQUE PUBLIC SCHOOLS OR THEIR DESIGNATED SUBSURFACE UTILITY CONSULTANT FOR APS-OWNED UTILITIES.
3. IF ANY UTILITY LINES, PIPELINES, OR UNDERGROUND UTILITY LINES ARE SHOWN ON THESE DRAWINGS, THEY ARE SHOWN IN AN APPROXIMATE MANNER ONLY, AND SUCH LINES MAY EXIST WHERE NONE ARE SHOWN. IF ANY SUCH EXISTING LINES ARE SHOWN, THE LOCATION IS BASED UPON INFORMATION PROVIDED BY THE OWNER OF SAID UTILITY, AND THE INFORMATION MAY BE INCOMPLETE, OR MAY BE OBSOLETE BY THE TIME CONSTRUCTION COMMENCES. THE ENGINEER HAS CONDUCTED ONLY PRELIMINARY INVESTIGATION OF THE LOCATION, DEPTH, SIZE, OR TYPE OF EXISTING UTILITY LINES, PIPELINES, OR UNDERGROUND UTILITY LINES. THIS INVESTIGATION IS NOT CONCLUSIVE, AND MAY NOT BE COMPLETE, THEREFORE, MAKES NO REPRESENTATION PERTAINING THERETO, AND ASSUMES NO RESPONSIBILITY OR LIABILITY THEREFORE. THE CONTRACTOR SHALL INFORM ITSELF OF THE LOCATION OF ANY UTILITY LINE, PIPELINE, OR UNDERGROUND UTILITY LINE IN OR NEAR THE AREA OF THE WORK IN ADVANCE OF AND DURING EXCAVATION WORK. THE CONTRACTOR IS FULLY RESPONSIBLE FOR ANY AND ALL DAMAGE CAUSED BY ITS FAILURE TO LOCATE, IDENTIFY AND PRESERVE ANY AND ALL EXISTING UTILITIES, PIPELINES, AND UNDERGROUND UTILITY LINES. IN PLANNING AND CONDUCTING EXCAVATION, THE CONTRACTOR SHALL COMPLY WITH STATE STATUTES, MUNICIPAL AND LOCAL ORDINANCES, RULES AND REGULATIONS, IF ANY, PERTAINING TO THE LOCATION OF THESE LINES AND FACILITIES.
4. SHOULD A CONFLICT EXIST BETWEEN THESE PLANS AND ACTUAL FIELD CONDITIONS, THE CONTRACTOR SHALL PROMPTLY NOTIFY THE ENGINEER IN WRITING SO THAT THE CONFLICT CAN BE RESOLVED WITH A MINIMUM AMOUNT OF DELAY FOR ALL PARTIES.
5. THE CONTRACTOR SHALL MAINTAIN ACCESS TO ADJACENT PROPERTIES DURING CONSTRUCTION.
6. ALL WORK ON THIS PROJECT SHALL BE PERFORMED IN ACCORDANCE WITH APPLICABLE FEDERAL, STATE AND LOCAL LAWS, RULES AND REGULATIONS CONCERNING SAFETY AND HEALTH.
7. THE CONTRACTOR SHALL ENSURE THAT NO SOIL ERODES FROM THE SITE INTO PUBLIC RIGHT-OF-WAY OR ONTO PRIVATE PROPERTY.
8. THE CONTRACTOR SHALL PROMPTLY CLEAN UP ANY MATERIAL EXCAVATED WITHIN THE PUBLIC RIGHT-OF-WAY SO THAT THE EXCAVATED MATERIAL IS NOT SUSCEPTIBLE TO BEING WASHED DOWN THE STREET.
9. CONTRACTOR SHALL NOTIFY THE ENGINEER NOT LESS THAN SEVEN (7) DAYS PRIOR TO STARTING WORK IN ORDER THAT THE ENGINEER MAY TAKE NECESSARY MEASURES TO ENSURE THE PRESERVATION OF SURVEY MONUMENTS. CONTRACTOR SHALL NOT DISTURB PERMANENT SURVEY MONUMENTS WITHOUT THE CONSENT OF THE ENGINEER AND SHALL NOTIFY THE ENGINEER AND BEAR THE EXPENSE OF REPLACING ANY THAT MAY BE DISTURBED WITHOUT PERMISSION. REPLACEMENT SHALL BE DONE ONLY BY THE ENGINEER. WHEN A CHANGE IS MADE IN THE FINISHED ELEVATION OF THE PAVEMENT OF ANY ROADWAY IN WHICH A PERMANENT SURVEY MONUMENT IS LOCATED, CONTRACTOR SHALL, AT HIS OWN EXPENSE, ADJUST THE MONUMENT COVER TO THE NEW GRADE UNLESS OTHERWISE SPECIFIED.
10. ALL PAVEMENT MARKINGS AND TRAFFIC SIGNS SHALL COMPLY WITH THE MANUAL OF UNIFORM TRAFFIC CONTROL DEVICES (MUTCD) PUBLISHED BY THE U.S. DEPARTMENT OF TRANSPORTATION FEDERAL HIGHWAY ADMINISTRATION, LATEST EDITION.
11. IF THE REMOVAL OF EXISTING CURB AND GUTTER, SIDEWALK, AND/OR PAVING IS REQUIRED, THE CONTRACTOR SHALL SAWCUT AND/OR REMOVE TO THE NEAREST JOINT. WHEN ABUTTING NEW PAVEMENT TO EXISTING, THE CONTRACTOR SHALL CUT BACK THE EXISTING PAVING TO A STRAIGHT LINE IN ORDER TO REMOVE ANY BROKEN OR CRACKED PAVEMENT. CURB AND GUTTER AND/OR PAVEMENT SHOWN AS EXISTING AND NOT TO BE REMOVED UNDER THIS CONTRACT AND WHICH IS DAMAGED OR DISPLACED BY THE CONTRACTOR SHALL BE REMOVED AND REPLACED BY THE CONTRACTOR AT THE CONTRACTOR'S EXPENSE.
12. A DISPOSAL SITE FOR ALL EXCESS EXCAVATION MATERIAL (CONTAMINATED OR OTHERWISE), ASPHALTIC PAVING, CONCRETE PAVING, ETC. SHALL BE OBTAINED BY THE CONTRACTOR IN COMPLIANCE WITH APPLICABLE REGULATIONS. ALL COSTS INCURRED IN OBTAINING A DISPOSAL SITE AND IN HAUL THERETO SHALL BE CONSIDERED INCIDENTAL TO CONSTRUCTION, THEREFORE, NO SEPARATE PAYMENT SHALL BE MADE.
13. A BORROW SITE FOR IMPORT MATERIAL SHALL BE OBTAINED BY THE CONTRACTOR IN COMPLIANCE WITH APPLICABLE REGULATIONS. ALL COSTS INCURRED IN OBTAINING A BORROW SITE AND IN HAUL THERETO SHALL BE CONSIDERED INCIDENTAL TO CONSTRUCTION, THEREFORE, NO SEPARATE PAYMENT SHALL BE MADE.
14. THE CONTRACTOR SHALL BE RESPONSIBLE FOR SAFELY OBTAINING THE REQUIRED COMPACTION. THE CONTRACTOR SHALL SELECT AND USE METHODS WHICH SHALL NOT BE INJURIOUS OR DAMAGING TO THE EXISTING FACILITIES AND STRUCTURES WHICH SURROUND THE WORK AREAS.
15. THE CONTRACTOR SHALL CONFINE HIS WORK WITHIN THE CONSTRUCTION LIMITS IN ORDER TO PRESERVE THE EXISTING IMPROVEMENTS AND SO AS NOT TO INTERFERE WITH THE OPERATIONS OF THE EXISTING FACILITIES.
16. THE CONTRACTOR SHALL BE RESPONSIBLE FOR SELECTING APPROPRIATE MEANS AND METHODS TO EXCAVATE AND TRENCH AND/OR INSTALL PIPE SO AS TO NOT EXCEED RIGHT-OF-WAY OR EASEMENT LIMITS, AND SO AS NOT TO INTERFERE WITH OTHER UTILITIES OR IMPROVEMENTS. THIS SHALL BE CONSIDERED INCIDENTAL TO CONSTRUCTION, THEREFORE, NO SEPARATE PAYMENT WILL BE MADE.
17. THE CONTRACTOR SHALL BE RESPONSIBLE FOR PROTECTING, SUPPORTING AND REPLACING, IF DAMAGED, ALL UTILITIES ENCOUNTERED DURING CONSTRUCTION. THIS SHALL BE CONSIDERED INCIDENTAL TO CONSTRUCTION, THEREFORE, NO SEPARATE PAYMENT WILL BE MADE.
18. ALL DIMENSIONS AND RADII OF CURB, CURB RETURNS, AND WALLS ARE SHOWN TO THE FACE OF CURB AND/OR WALL.
19. THE CONTRACTOR SHALL NOTIFY THE OWNER 48 HOURS PRIOR TO STRIPING SO THAT LAYOUT CAN BE VERIFIED.
20. PRIOR TO CONSTRUCTION, THE CONTRACTOR SHALL EXCAVATE AND VERIFY THE HORIZONTAL AND VERTICAL LOCATION OF ALL POTENTIAL OBSTRUCTIONS. SHOULD A CONFLICT EXIST, THE CONTRACTOR SHALL NOTIFY THE ENGINEER IN WRITING SO THAT THE CONFLICT CAN BE RESOLVED WITH A MINIMUM AMOUNT OF DELAY. THE CONTRACTOR SHALL BE RESPONSIBLE FOR ALL INTERPRETATIONS IT MAKES WITHOUT FIRST CONTACTING THE ENGINEER AS REQUIRED ABOVE.
21. WHEN APPLICABLE, CONTRACTOR SHALL SECURE, ON BEHALF OF THE OWNER AND OPERATORS, "TOPSOIL DISTURBANCE PERMIT" FROM THE CITY AND/OR FILE A NOTICE OF INTENT (N.O.I.) WITH THE EPA PRIOR TO BEGINNING CONSTRUCTION.
22. ALL FILL SHALL BE CLEAN, FREE FROM VEGETATION, DEBRIS, AND OTHER DELETERIOUS MATERIALS, AND SHALL NOT BE CONTAMINATED WITH HYDROCARBONS OR OTHER CHEMICAL CONTAMINANTS.
23. ALL FILL SHALL BE COMPACTED TO A MINIMUM OF 95% ASTM D-1557 UNLESS A GREATER COMPACTION REQUIREMENT IS OTHERWISE SPECIFIED.
24. **CAUTION: THESE DRAWINGS DO NOT INCLUDE NECESSARY COMPONENTS FOR CONSTRUCTION SAFETY WHICH SHALL REMAIN THE RESPONSIBILITY OF THE CONTRACTOR. ALL EXCAVATION, TRENCHING AND SHORING ACTIVITIES MUST BE CARRIED-OUT IN ACCORDANCE WITH OSHA 29 CFR 1926, SUBPART P-EXCAVATIONS.**

JOB NO. 2011.180.2

REV.	SHEETS	CITY ENGINEER	DATE	USER DEPARTMENT	DATE	USER DEPARTMENT	DATE
⚠	HI		02/12				

APPROVAL OF REVISIONS

09-02-2011

JEFFREY G. MORTENSEN NEW MEXICO 8547 REGISTERED PROFESSIONAL ENGINEER

HIGH MESA Consulting Group
6010-B MIDWAY PARK BLVD. NE • ALBUQUERQUE, NEW MEXICO 87109
PHONE: 505.345.4250 • FAX: 505.345.4254 • www.highmesacg.com

APPROVED FOR CONSTRUCTION

C.E.

SHEET 1 OF 11

⚠ RECORD DRAWING

File Path: P:\MOA\2011.180.2\DWG\RECORD\ Plot Date: 02-23-2012
File Name: 111802_SH1AB.DWG Plot Time: 2:37 pm

LEGAL DESCRIPTION

TRACTS H AND J, BEL AIR ELEMENTARY SCHOOL, ALBUQUERQUE, NEW MEXICO.

EASEMENT KEYED NOTES

EASEMENTS

- (A) 5' UTILITY EASEMENT GRANTED BY PLAT D2-120B
- (B) 10' PUBLIC WALK EASEMENT GRANTED BY PLAT D2-120B
- (C) APPROXIMATE LOCATION OF 10' UTILITY EASEMENT GRANTED BY PLAT D2-120B
- (D) 5' UTILITY EASEMENT RANTED BY PLAT D1-39 - OFFSITE
- (E) 5' PUBLIC UTILITY EASEMENT GRANTED BY PLAT C25-149 - OFFSITE

BENCHMARKS

PROJECT BENCHMARK

ACS BENCHMARK 9-G17, "☐" CUT CHISELED ON TOP OF CONCRETE CURB AT THE WNW CURB RETURN LOCATED IN THE NORTHWEST QUADRANT OF THE INTERSECTION OF CANDELARIA ROAD N.E. AND SAN MATEO BOULEVARD N.E.
ELEVATION = 5204.30 FEET (NGVD 29)

T.B.M. #1

A REBAR WITH CAP STAMPED "LS 7719" TAGGED WITH WASHER STAMPED "NMPS 11184", AT THE NORTHWEST CORNER OF THE PROPERTY, AS SHOWN ON THIS SHEET.
ELEVATION = 5171.37 FEET (NGVD 29)

SURVEY NOTE

THIS IS NOT A BOUNDARY SURVEY. DATA IS SHOWN FOR ORIENTATION ONLY. THE BOUNDARY INFORMATION DEPICTED BY THIS PLAN IS BASED UPON THE BOUNDARY SURVEY PREPARED BY HIGH MESA CONSULTING GROUP, NMPS NO. 11184, DATED 4/16/2007, (JOB NO. 2006.184.4). EXISTING INFORMATION IS BASED UPON RECORD DRAWING PREPARED BY HIGH MESA CONSULTING GROUP, NMPE NO. 8547, DATED 10-16-2009, (JOB NO. 2008.191.6).

LEGEND

AP	ASPHALT PAVEMENT
ARD	ASPHALT RUNDOWN
ASPH	ASPHALT
BB	BREAKER BOX
BLDG	BUILDING
BR	BIKE RACK
C	COMMUNICATION
C&G	CURB AND GUTTER
C/PM	COMMUNICATION BY PAINT MARK
CB	CONCRETE BENCH
CCT	CONCRETE CUT
CI	CAST IRON PIPE
CLD	CENTERLINE OF DOOR
CLDD	CENTERLINE OF DOUBLE DOOR
CLF	CHAINLINK FENCE
CMU	CONCRETE MASONRY UNIT
CNY	CANOPY
CO	SANITARY SEWER CLEANOUT
CONC	CONCRETE
COP	CURB OPENING
CP	CONCRETE PAD
CRW	CONCRETE RETAINING WALL
CWALL	CONCRETE WALL
DBL	DOUBLE
DW	DRIVEWAY
EA	EDGE OF ASPHALT
EC	EDGE OF CONCRETE
ECND	ELECTRIC CONDUIT
EP	ELECTRIC PANEL
EPB	ELECTRIC PULLBOX
ET	ELECTRIC TRANSFORMER
FH	FIRE HYDRANT
FL	FLOWLINE
G/PM	GAS BY PAINT MARK
GS	GAS SERVICE
GW	GUY WIRE
INV	INVERT ELEVATION
LB	LADDER BARS
LS	LANDSCAPED AREA
MCB	METER CAN WITH BIBVALVE
MCHV	METER CAN WITH HOSEBIB AND VALVE
MCSV	METER CAN WITH SPRINKLER VALVE
MDS	METAL DOOR STOP
MH	MANHOLE
MLP	METAL LIGHT POLE WITH 2' CONCRETE BASE
MRL	METAL RAMP LANDING
MSL	METAL STEPS LANDING
OHC(1)	OVERHEAD COMMUNICATION (# OF LINES)
OHE(1)	OVERHEAD ELECTRIC (# OF LINES)
OHM	OVERHEAD ELECTRIC MAST
PB	PARKING BUMPER
PE	PLAYGROUND EQUIPMENT
PLTR	PLANTER
PORT	PORTABLE
PS	PARKING STRIPE
PVC	POLYVINYL CHLORIDE
PVMT	PAVEMENT
RD	ROOF DRAIN
SAS	SANITARY SEWER
SAS/PM	SANITARY SEWER CLEANOUT
SB	SPEED BUMP
SCB	SPRINKLER CONTROL BOX
SGP	STEEL GUARD POST
SHR	STEEL HANDRAIL
SI	STORM INLET
STD	STANDARD
SW	SIDEWALK
SWC	SIDEWALK CULVERT
TA	TOP OF ASPHALT
TC	TOP OF CURB
TCO	TOP OF CONCRETE
TG	TOP OF GRATE
TS	TRAFFIC SIDEWALK
TYP	TYPICAL
UG	UNDERGROUND
UPP	UTILITY PAVING PATCH
VCP	VITRIFIED CLAY PIPE
VG	VALLEY GUTTER
WCR	WHEELCHAIR RAMP
WF	WATER FAUCET
WHB	WATER HOTBOX
WL	WATERLINE
WL/PM	WATERLINE BY PAINT MARK
WMB	WATER METER BOX
WPP	WOOD POWER POLE
WVB	WATER VALVE BOX
*	UTILITY MARKER
☐	**PROPOSED ASPHALT PAVING**

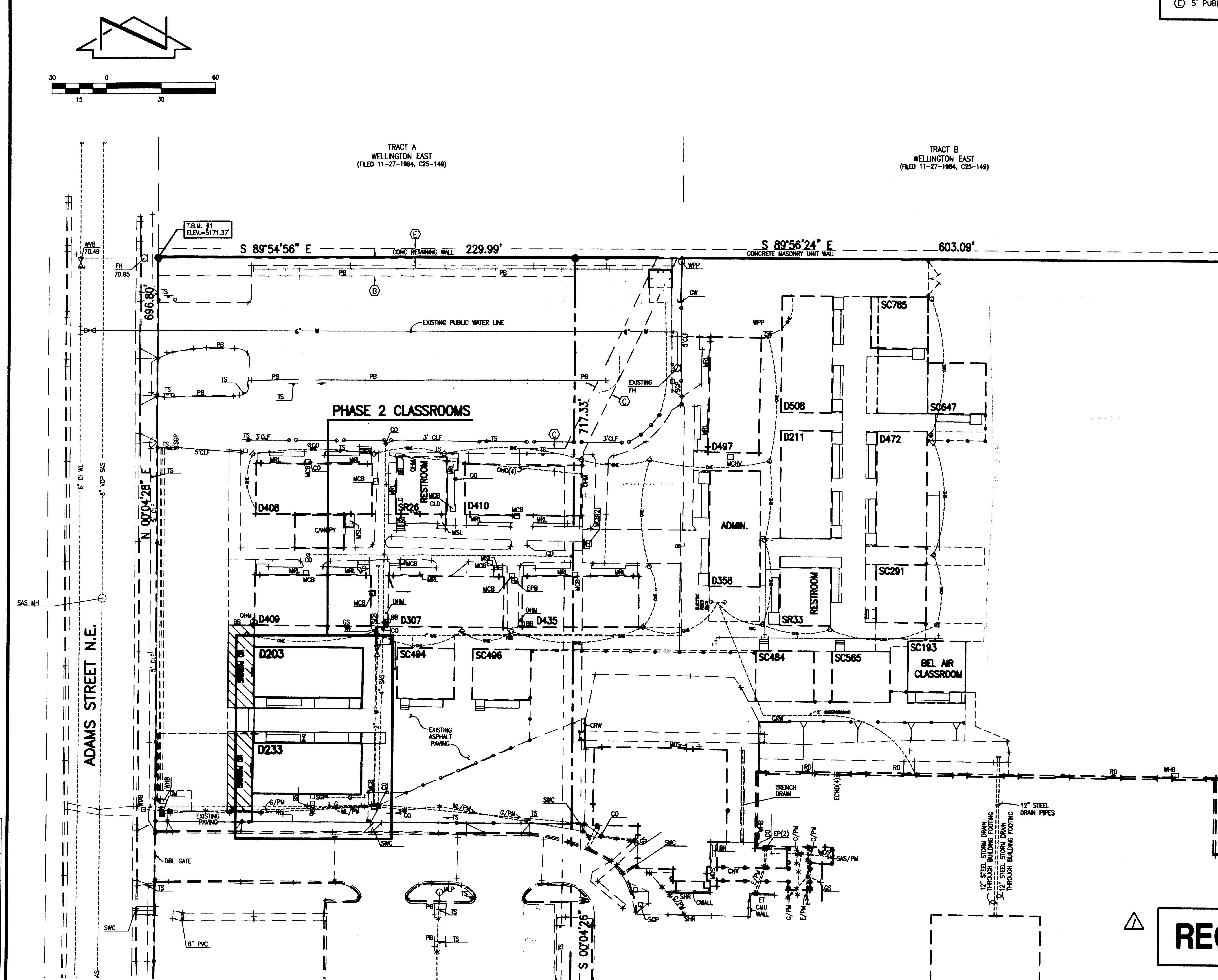

RECORD DRAWING

DESIGNED BY	J.G.M.
DRAWN BY	J.Y.R./E.J.S.
APPROVED BY	J.G.M.

NO.	DATE	BY	REVISIONS
1	02/12	B.E.E.	RECORD DRAWING

HIGH MESA Consulting Group
6010-B MIDWAY PARK BLVD. NE • ALBUQUERQUE, NEW MEXICO 87109
PHONE: 505.345.4250 • FAX: 505.345.4254 • www.highmesacg.com

DEVELOPMENT PLAN (FOR INFORMATION AND ORIENTATION ONLY)

P.A.P.A. CHARTER SCHOOL AT BEL AIR ELEMENTARY SCHOOL

3000 ADAMS NE

JOB NO. 2011.180.2

DATE 09-2011

SHEET 2 OF 11

File Path: P:\DATA\2011.180.2\DWG\RECORD\ | Plot Date: 02-23-2012
File Name: 111802_SH2AB.DWG | Plot Time: 2:52 pm

RECORD DRAWING
FOR CERTIFICATION, SEE SHEET 1

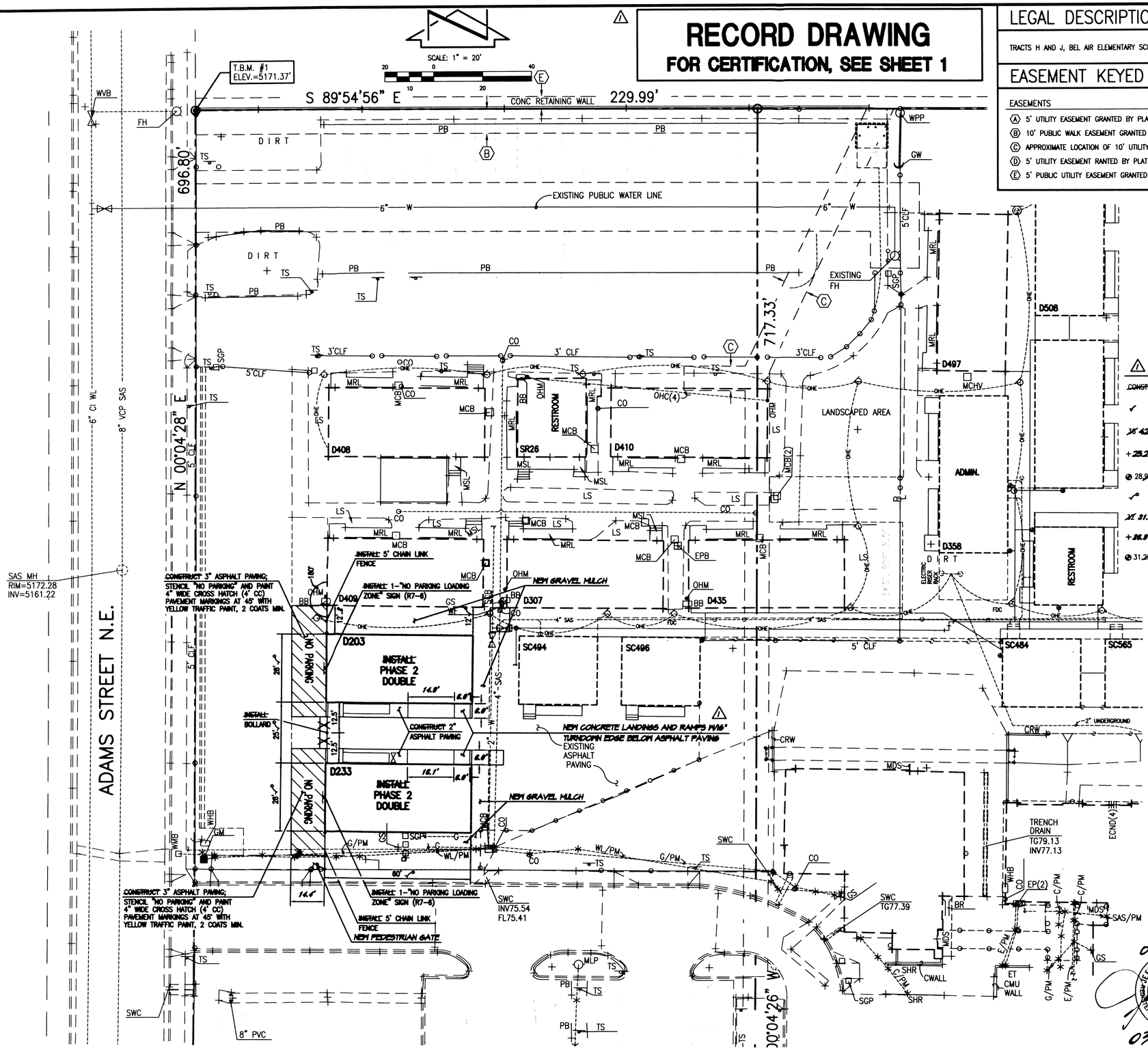

LEGAL DESCRIPTION

TRACTS H AND J, BEL AIR ELEMENTARY SCHOOL, ALBUQUERQUE, NEW MEXICO.

EASEMENT KEYED NOTES

EASEMENTS

- (A) 5' UTILITY EASEMENT GRANTED BY PLAT D2-120B
- (B) 10' PUBLIC WALK EASEMENT GRANTED BY PLAT D2-120B
- (C) APPROXIMATE LOCATION OF 10' UTILITY EASEMENT GRANTED BY PLAT D2-120B
- (D) 5' UTILITY EASEMENT RANTED BY PLAT D1-39 - OFFSITE
- (E) 5' PUBLIC UTILITY EASEMENT GRANTED BY PLAT C25-149 - OFFSITE

BENCHMARKS

PROJECT BENCHMARK

ACS BENCHMARK 9-G17, "□" CUT CHISELED ON TOP OF CONCRETE CURB AT THE WNW CURB RETURN LOCATED IN THE NORTHWEST QUADRANT OF THE INTERSECTION OF CANDELARIA ROAD N.E. AND SAN MATEO BOULEVARD N.E.
ELEVATION = 5204.30 FEET (NGVD 29)

T.B.M. #1

A REBAR WITH CAP STAMPED "LS 7719" TAGGED WITH WASHER STAMPED "NMPS 11184", AT THE NORTHWEST CORNER OF THE PROPERTY, AS SHOWN ON THIS SHEET.
ELEVATION = 5171.37 FEET (NGVD 29)

SURVEY NOTE

THIS IS NOT A BOUNDARY SURVEY. DATA IS SHOWN FOR ORIENTATION ONLY. THE BOUNDARY INFORMATION DEPICTED BY THIS PLAN IS BASED UPON THE BOUNDARY SURVEY PREPARED BY HIGH MESA CONSULTING GROUP, NMPS NO. 11184, DATED 4/16/2007, (JOB NO. 2006.184.4). EXISTING INFORMATION IS BASED UPON RECORD DRAWING PREPARED BY HIGH MESA CONSULTING GROUP, NMPE NO. 8547, DATED 10-16-2009, (JOB NO. 2008.191.6).

LEGEND

AP	ASPHALT PAVEMENT
ARD	ASPHALT RUNDOWN
ASPH	ASPHALT
BB	BREAKER BOX
BLDG	BUILDING
BR	BIKE RACK
C	COMMUNICATION
C&G	CURB AND GUTTER
C/PM	COMMUNICATION BY PAINT MARK
CB	CONCRETE BENCH
CCT	CONCRETE CUT
CI	CAST IRON PIPE
CLD	CENTERLINE OF DOOR
CLDD	CENTERLINE OF DOUBLE DOOR
CLF	CHAINLINK FENCE
CMU	CONCRETE MASONRY UNIT
CNY	CANOPY
CO	SANITARY SEWER CLEANOUT
CONC	CONCRETE
COP	CURB OPENING
CP	CONCRETE PAD
CRW	CONCRETE RETAINING WALL
CWALL	CONCRETE WALL
DBL	DOUBLE
DW	DRIVEWAY
EA	EDGE OF ASPHALT
EC	EDGE OF CONCRETE
ECND	ELECTRIC CONDUIT
EP	ELECTRIC PANEL
EPB	ELECTRIC PULLBOX
ET	ELECTRIC TRANSFORMER
FH	FIRE HYDRANT
FL	FLOWLINE
G/PM	GAS BY PAINT MARK
GS	GAS SERVICE
GW	GUY WIRE
INV	INVERT ELEVATION
LB	LADDER BARS
LS	LANDSCAPED AREA
MCB	METER CAN WITH BIBVALVE
MCHV	METER CAN WITH HOSEBIB AND VALVE
MCSV	METER CAN WITH SPRINKLER VALVE
MDS	METAL DOOR STOP
MH	MANHOLE
MLP	METAL LIGHT POLE WITH 2' CONCRETE BASE
MRL	METAL RAMP LANDING
MSL	METAL STEPS LANDING
OHC(1)	OVERHEAD COMMUNICATION (# OF LINES)
OHE(1)	OVERHEAD ELECTRIC (# OF LINES)
OHM	OVERHEAD ELECTRIC MAST
PB	PARKING BUMPER
PE	PLAYGROUND EQUIPMENT
PLTR	PLANTER
PORT	PORTABLE
PS	PARKING STRIPE
PVC	POLYVINYL CHLORIDE
PVMT	PAVEMENT
RD	ROOF DRAIN
SAS	SANITARY SEWER
SAS/PM	SANITARY SEWER CLEANOUT
SB	SPEED BUMP
SCB	SPRINKLER CONTROL BOX
SGP	STEEL GUARD POST
SHR	STEEL HANDRAIL
SI	STORM INLET
STD	STANDARD
SW	SIDEWALK
SWC	SIDEWALK CULVERT
TA	TOP OF ASPHALT
TC	TOP OF CURB
TCO	TOP OF CONCRETE
TG	TOP OF GRATE
TS	TRAFFIC SIDEWALK
TYP	TYPICAL
UG	UNDERGROUND
UPP	UTILITY PAVING PATCH
VCP	VITRIFIED CLAY PIPE
VG	VALLEY GUTTER
WCR	WHEELCHAIR RAMP
WF	WATER FAUCET
WHB	WATER HOTBOX
WL	WATERLINE
WL/PM	WATERLINE BY PAINT MARK
WMB	WATER METER BOX
WPP	WOOD POWER POLE
WVB	WATER VALVE BOX
*	UTILITY MARKER

RECORD DRAWING LEGEND

CONSTRUCT	RECORD INFORMATION (VERIFIED BY ENGINEER)
✓	AS-CONSTRUCTED = AS-DESIGNED (VERIFIED BY ENGINEER)
36'42"	RECORD INFORMATION (VERIFIED BY ENGINEER)
+25.2	RECORD INFORMATION (VERIFIED BY ENGINEER)
@ 28,98.42	RECORD INFORMATION (VERIFIED BY ENGINEER)
✓*	AS-CONSTRUCTED = AS-DESIGNED (VERIFIED BY AS-BUILT SURVEY)
32' 31.8	RECORD INFORMATION FROM AS-BUILT SURVEY
+26.9	RECORD INFORMATION FROM AS-BUILT SURVEY
@ 31,25.22	RECORD INFORMATION FROM AS-BUILT SURVEY

DESIGN LEGEND

PROPOSED CONCRETE

PROPOSED ASPHALT PAVING

HIGH MESA Consulting Group
6010-B MIDWAY PARK BLVD. NE • ALBUQUERQUE, NEW MEXICO 87109
PHONE: 505.345.4250 • FAX: 505.345.4254 • www.highmesacg.com

e Path: P:\DATA\2011.180.2\DWG\RECORD\ Plot Date: 02-23-2012
e Name: 111802_SH3AB.DWG Plot Time: 2:58 pm

PAVING AND LAYOUT PLAN
P.A.P.A. CHARTER SCHOOL AT BEL AIR ELEMENTARY SCHOOL
3000 ADAMS NE

DESIGNED BY J.G.M.
DRAWN BY J.Y.R./E.J.S.
APPROVED BY J.G.M.

NO.	DATE	BY	REVISIONS
1	02/12	B.E.E.	RECORD DRAWING AND CERTIFICATION

JOB NO. 2011.180.2
DATE 08-2011
SHEET 3 OF 11

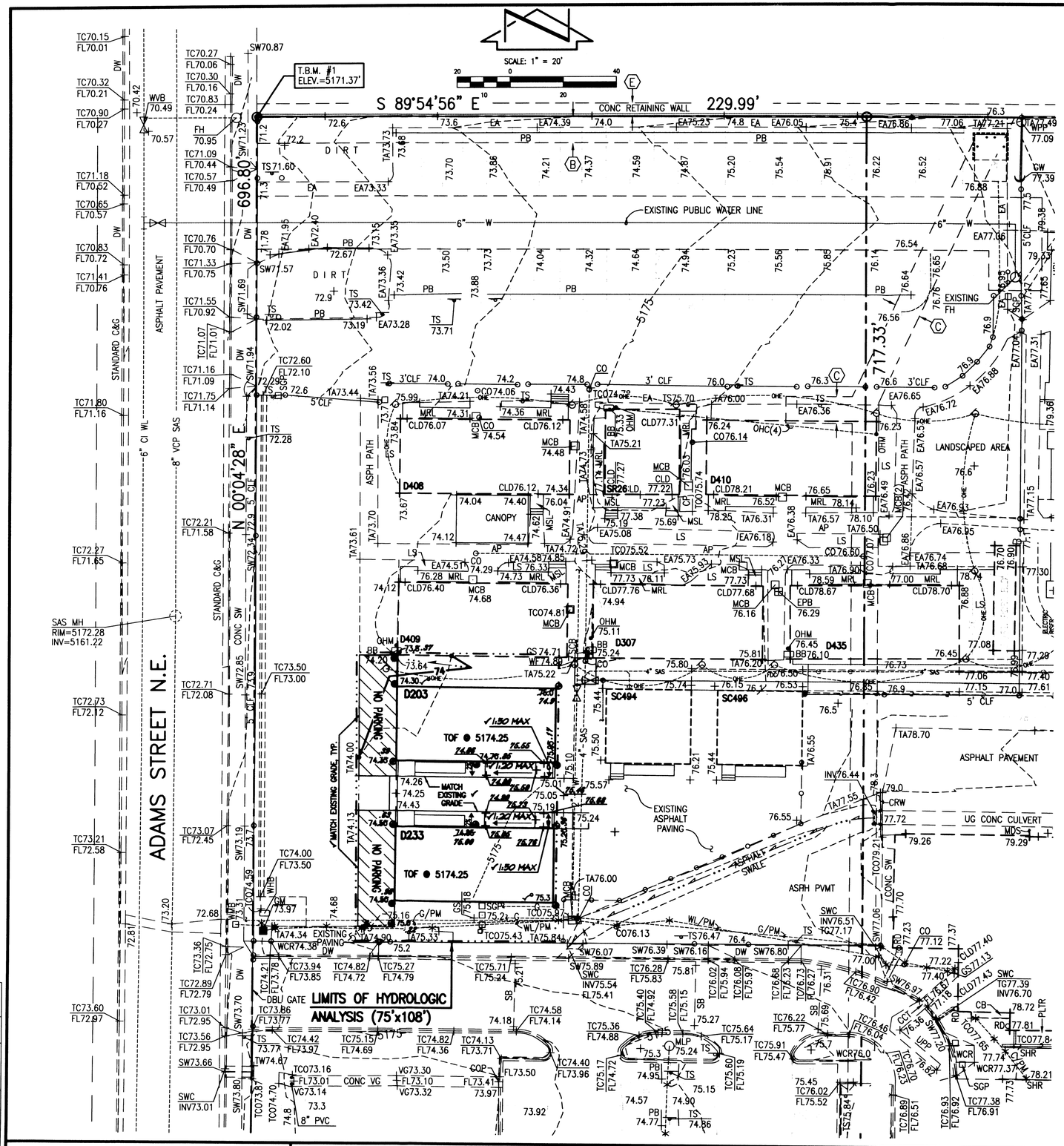

DESIGN GRADING LEGEND:

+76.88	EXISTING ELEVATION FROM PRIOR SURVEY
+ 76.73	EXISTING SPOT ELEVATION FROM RECORD DATA
● 75.20	PROPOSED SPOT ELEVATION
	EXISTING FLOWLINE
	PROPOSED FLOWLINE
	EXISTING CONTOUR
75	PROPOSED CONTOUR
	EXISTING DIRECTION OF FLOW
	PROPOSED DIRECTION OF FLOW
	HIGH POINT / DIVIDE
	PROPOSED CONCRETE
	PROPOSED ASPHALT PAVING

RECORD DRAWING LEGEND

CONSTRUCT	RECORD INFORMATION (VERIFIED BY ENGINEER)
✓	AS-CONSTRUCTED = AS-DESIGNED (VERIFIED BY ENGINEER)
36.42"	RECORD INFORMATION (VERIFIED BY ENGINEER)
+25.2	RECORD INFORMATION (VERIFIED BY ENGINEER)
● 28.98.42	RECORD INFORMATION (VERIFIED BY ENGINEER)
✓	AS-CONSTRUCTED = AS-DESIGNED (VERIFIED BY AS-BUILT SURVEY)
31.8	RECORD INFORMATION FROM AS-BUILT SURVEY
+26.9	RECORD INFORMATION FROM AS-BUILT SURVEY
● 31.25.22	RECORD INFORMATION FROM AS-BUILT SURVEY

BENCHMARKS

PROJECT BENCHMARK

ACS BENCHMARK 9-G17, "□" CUT CHISELED ON TOP OF CONCRETE CURB AT THE WNW CURB RETURN LOCATED IN THE NORTHWEST QUADRANT OF THE INTERSECTION OF CANDELARIA ROAD N.E. AND SAN MATEO BOULEVARD N.E.
ELEVATION = 5204.30 FEET (NGVD 29)

T.B.M. #1

A REBAR WITH CAP STAMPED "LS 7719" TAGGED WITH WASHER STAMPED "NMPS 11184", AT THE NORTHWEST CORNER OF THE PROPERTY, AS SHOWN ON THIS SHEET.
ELEVATION = 5171.37 FEET (NGVD 29)

SURVEY NOTE

THIS IS NOT A BOUNDARY SURVEY. DATA IS SHOWN FOR ORIENTATION ONLY. THE BOUNDARY INFORMATION DEPICTED BY THIS PLAN IS BASED UPON THE BOUNDARY SURVEY PREPARED BY HIGH MESA CONSULTING GROUP, NMPS NO. 11184, DATED 4/16/2007, (JOB NO. 2006.184.4). EXISTING INFORMATION IS BASED UPON RECORD DRAWING PREPARED BY HIGH MESA CONSULTING GROUP, NMPE NO. 8547, DATED 10-16-2009, (JOB NO. 2008.191.6).

EXISTING LEGEND:

SEE SHEET 2.

CONSTRUCTION NOTES:

1. TWO (2) WORKING DAYS PRIOR TO ANY EXCAVATION, CONTRACTOR MUST CONTACT NEW MEXICO ONE CALL SYSTEM 260-1990 (ALBUQUERQUE AREA), 1-800-321-ALERT(2537) (STATEWIDE), FOR LOCATION OF EXISTING UTILITIES AND ALBUQUERQUE PUBLIC SCHOOLS OR THEIR DESIGNATED SUBSURFACE UTILITY CONSULTANT FOR APS-OWNED UTILITIES.
2. PRIOR TO CONSTRUCTION, THE CONTRACTOR SHALL EXCAVATE AND VERIFY THE HORIZONTAL AND VERTICAL LOCATION OF ALL POTENTIAL OBSTRUCTIONS. SHOULD A CONFLICT EXIST, THE CONTRACTOR SHALL NOTIFY THE ENGINEER IN WRITING SO THAT THE CONFLICT CAN BE RESOLVED WITH A MINIMUM AMOUNT OF DELAY. THE CONTRACTOR SHALL BE RESPONSIBLE FOR ALL INTERPRETATIONS IT MAKES WITHOUT FIRST CONTACTING THE ENGINEER AS REQUIRED ABOVE.
3. ALL WORK ON THIS PROJECT SHALL BE PERFORMED IN ACCORDANCE WITH APPLICABLE FEDERAL, STATE AND LOCAL LAWS, RULES AND REGULATIONS CONCERNING CONSTRUCTION SAFETY AND HEALTH.
4. ALL CONSTRUCTION WITHIN PUBLIC RIGHT-OF-WAY SHALL BE PERFORMED IN ACCORDANCE WITH APPLICABLE CITY OF ALBUQUERQUE STANDARDS AND PROCEDURES.
5. IF ANY UTILITY LINES, PIPELINES, OR UNDERGROUND UTILITY LINES ARE SHOWN ON THESE DRAWINGS, THEY ARE SHOWN IN AN APPROXIMATE MANNER ONLY, AND SUCH LINES MAY EXIST WHERE NONE ARE SHOWN. IF ANY SUCH EXISTING LINES ARE SHOWN, THE LOCATION IS BASED UPON INFORMATION PROVIDED BY THE OWNER OF SAID UTILITY, AND THE INFORMATION MAY BE INCOMPLETE, OR MAY BE OBSOLETE BY THE TIME CONSTRUCTION COMMENCES. THE ENGINEER HAS CONDUCTED ONLY PRELIMINARY INVESTIGATION OF THE LOCATION, DEPTH, SIZE, OR TYPE OF EXISTING UTILITY LINES, PIPELINES, OR UNDERGROUND UTILITY LINES. THIS INVESTIGATION IS NOT CONCLUSIVE, AND MAY NOT BE COMPLETE, THEREFORE, MAKES NO REPRESENTATION PERTAINING THERETO, AND ASSUMES NO RESPONSIBILITY OR LIABILITY THEREFOR. THE CONTRACTOR SHALL INFORM ITSELF OF THE LOCATION OF ANY UTILITY LINE, PIPELINE, OR UNDERGROUND UTILITY LINE IN OR NEAR THE AREA OF THE WORK IN ADVANCE OF AND DURING EXCAVATION WORK. THE CONTRACTOR IS FULLY RESPONSIBLE FOR ANY AND ALL DAMAGE CAUSED BY ITS FAILURE TO LOCATE, IDENTIFY AND PRESERVE ANY AND ALL EXISTING UTILITIES, PIPELINES, AND UNDERGROUND UTILITY LINES. IN PLANNING AND CONDUCTING EXCAVATION, THE CONTRACTOR SHALL COMPLY WITH STATE STATUTES, MUNICIPAL AND LOCAL ORDINANCES, RULES AND REGULATIONS, IF ANY, PERTAINING TO THE LOCATION OF THESE LINES AND FACILITIES.
6. THE DESIGN OF PLANTERS AND LANDSCAPED AREAS IS NOT PART OF THIS PLAN. ALL PLANTERS AND LANDSCAPED AREAS ADJACENT TO THE BUILDING(S) SHALL BE PROVIDED WITH POSITIVE DRAINAGE TO AVOID ANY PONDING ADJACENT TO THE STRUCTURE. FOR CONSTRUCTION DETAILS, REFER TO LANDSCAPING PLAN.

EROSION CONTROL MEASURES:

1. THE CONTRACTOR SHALL ENSURE THAT NO SOIL ERODES FROM THE SITE INTO PUBLIC RIGHT-OF-WAY OR ONTO PRIVATE PROPERTY.
2. THE CONTRACTOR SHALL PROMPTLY CLEAN UP ANY MATERIAL EXCAVATED WITHIN THE PUBLIC RIGHT-OF-WAY SO THAT THE EXCAVATED MATERIAL IS NOT SUSCEPTIBLE TO BEING WASHED DOWN THE STREET.
3. WHEN APPLICABLE, CONTRACTOR SHALL SECURE "TOPSOIL DISTURBANCE PERMIT" FROM THE CITY AND/OR FILE A NOTICE OF INTENT (N.O.I.) WITH THE EPA PRIOR TO BEGINNING CONSTRUCTION.

LEGAL DESCRIPTION

SEE SHEET 2.

EASEMENT KEYED NOTES

SEE SHEET 2.

09.02.2011
JEFFREY G. MORTENSEN
NEW MEXICO
8547
REGISTERED PROFESSIONAL ENGINEER
03.22.2012

RECORD DRAWING
FOR CERTIFICATION, SEE SHEET 1

HIGH MESA Consulting Group
6010-B MIDWAY PARK BLVD. NE • ALBUQUERQUE, NEW MEXICO 87109
PHONE: 505.345.4250 • FAX: 505.345.4254 • www.highmesacg.com

File Path: P:\MYA\2011.180.2\DWG\R2080 | Plot Date: 02-23-2012
File Name: 111802_SH5AB.DWG | Plot Time: 3:00 pm

GRADING PLAN
P.A.P.A. CHARTER SCHOOL AT BEL AIR ELEMENTARY SCHOOL
3000 ADAMS NE

DESIGNED BY J.G.M.
DRAWN BY J.Y.R./E.J.S.
APPROVED BY J.G.M.

NO.	DATE	BY	REVISIONS
1	02/12	B.E.E.	RECORD DRAWING AND CERTIFICATION

JOB NO. 2011.180.2
DATE 08-2011
SHEET 5 OF 11

DRAINAGE PLAN

I. INTRODUCTION AND EXECUTIVE SUMMARY

THIS PROJECT, GENERALLY LOCATED AT THE NORTHEAST CORNER OF CANDELARIA ROAD NE AND ADAMS STREET NE, REPRESENTS A MODIFICATION TO AN EXISTING SITE WITHIN AN INFILL AREA. THE PROPOSED IMPROVEMENTS CONSIST OF ADDING TWO DOUBLE PORTABLE CLASSROOM BUILDINGS TO THE EXISTING P.A.P.A. CHARTER SCHOOL CAMPUS AT THE NORTHWEST CORNER OF THE BEL-AIR ELEMENTARY SCHOOL SITE. THE PROPOSED DRAINAGE CONCEPT IS TO CONTINUE THE FREE DISCHARGE OF RUNOFF FROM THIS PORTION OF THE SITE, BASIN 7, TO ADAMS STREET NE.

THIS SUBMITTAL IS MADE IN SUPPORT OF FOUNDATION, GRADING AND PAVING PERMITS WITHIN THE JURISDICTION OF THE CITY OF ALBUQUERQUE

II. PROJECT DESCRIPTION

AS SHOWN BY THE VICINITY MAP, THIS PROJECT SITE IS LOCATED AT THE NORTHWEST CORNER OF THE BEL-AIR ELEMENTARY SCHOOL SITE AND COMPRISES A PORTION OF THE P.A.P.A. CHARTER SCHOOL CAMPUS. THE CURRENT LEGAL DESCRIPTION IS TRACTS H AND J, BEL-AIR ELEMENTARY SCHOOL, ALBUQUERQUE, NEW MEXICO. AS SHOWN BY PANELS 351 & 352 OF 825 OF THE NATIONAL FLOOD INSURANCE PROGRAM FLOOD INSURANCE RATE MAPS PUBLISHED BY FEMA FOR BERNALILLO COUNTY, NEW MEXICO, SEPTEMBER 26, 2008, THIS SITE DOES NOT LIE WITHIN A DESIGNATED FLOOD HAZARD ZONE. A PORTION OF THE OVERALL SCHOOL SITE DRAINS TO THE DESIGNATED FLOOD HAZARD (AO) ZONE CONTAINED WITHIN CANDELARIA ROAD NE. THIS PROJECT, HOWEVER, WILL NOT CONTRIBUTE RUNOFF TO THE FLOOD HAZARD ZONE AND INSTEAD DISCHARGES TO ADAMS STREET, FLOWING NORTH TO ULTIMATELY ENTER THE HAHN ARROYO WHERE CAPACITY IS NOT AN ISSUE.

III. BACKGROUND DOCUMENTS AND RESEARCH

THE PREPARATION OF THIS SUBMITTAL RELIED UPON THE FOLLOWING DOCUMENT:

- DRAINAGE SUBMITTAL FOR THE P.A.P.A. CHARTER SCHOOL AT BEL-AIR ELEMENTARY SCHOOL PREPARED BY HIGH MESA CONSULTING GROUP, NMPS NO. 8547, DATED 10-16-2009 AND CERTIFIED 12-09-2009. THE SUBMITTAL PROVIDES THE BASIS FOR THE EXISTING CONDITION FOR THIS PORTION OF THE P.A.P.A. CHARTER SCHOOL CAMPUS. IN ADDITION, THE 2009 SUBMITTAL IDENTIFIED THAT THE PROPOSED IMPROVEMENTS LIE WITHIN BASIN 7 ON THE CHARTER SCHOOL CAMPUS. BASIN 7 IS ALLOWED FREE DISCHARGE TO ADAMS STREET NE; FROM THIS POINT THE RUNOFF FLOWS NORTH TO ULTIMATELY OUTFALL TO THE HAHN ARROYO.

IV. EXISTING CONDITIONS

THIS PROJECT SITE IS LOCATED ON THE P.A.P.A. CHARTER SCHOOL CAMPUS AT THE NORTHWEST CORNER OF THE BEL-AIR ELEMENTARY SCHOOL SITE. THE PROJECT LIES ENTIRELY WITHIN BASIN 7 CONFIRMED BY THE 2009 DRAINAGE SUBMITTAL. THIS PORTION OF THE SITE CONSISTS PRIMARILY OF BARE GROUND COVER, WITH A PAVED ACCESS WALKWAY. RUNOFF GENERATED BY THE PROJECT SITE DRAINS FROM EAST TO WEST, DISCHARGING ONTO THE ADJACENT PAVED PARKING LOT. FROM THIS POINT, THE RUNOFF FLOWS NORTH ALONG THE PARKING LOT CURB AND GUTTER TO FREE DISCHARGE TO ADAMS STREET NE VIA EXISTING DRIVEPAD. RUNOFF THEN FLOWS NORTH WITHIN ADAMS STREET NE, A FULLY DEVELOPED PUBLIC STREET WITH CURB AND GUTTER AND ASPHALT PAVEMENT, TO ULTIMATELY DISCHARGE TO THE HAHN ARROYO, A PUBLIC DRAINAGE CHANNEL.

OFFSITE FLOWS DO NOT ENTER THE PROJECT SITE, AS CONFIRMED BY THE 2009 DRAINAGE SUBMITTAL. ONSITE RUNOFF FROM SCHOOL IMPROVEMENTS UPSTREAM SURFACE DRAIN ACROSS THE PROJECT SITE TO FREE DISCHARGE INTO ADAMS STREET NE AND ULTIMATELY OUTFALL TO THE HAHN ARROYO.

V. DEVELOPED CONDITIONS

PROPOSED IMPROVEMENTS WITHIN THE PROJECT SITE CONSIST OF THE ADDITION OF TWO (2) DOUBLE PORTABLE CLASSROOM BUILDINGS ALONG WITH ADDITIONAL ASPHALT PAVING WITHIN BASIN 7. RUNOFF GENERATED BY THE NEW IMPROVEMENTS WILL CONTINUE TO DRAIN FROM EAST TO WEST, DISCHARGING ONTO THE EXISTING PARKING LOT. RUNOFF PROCEEDS TO FLOW NORTH ALONG THE EXISTING PARKING LOT CURB AND GUTTER TO FREE DISCHARGE INTO ADAMS STREET NE VIA EXISTING DRIVEPAD. FROM THIS POINT, THE RUNOFF FLOWS TO HAHN ARROYO AS DESCRIBED ABOVE.

THERE WILL BE A MINOR INCREASE IN IMPERVIOUS AREA DUE TO THE PROPOSED IMPROVEMENTS, RESULTING IN A MINOR INCREASE IN PEAK RATE OF DISCHARGE AND VOLUME OF RUNOFF FROM THE PROJECT SITE.

VI. GRADING PLAN

THE GRADING PLAN SHOWS 1.) EXISTING GRADES INDICATED BY SPOT ELEVATIONS AND CONTOURS AT 1'0" INTERVALS AS TAKEN FROM THE DRAINAGE CERTIFICATION DATED 12-09-2009, 2) PROPOSED GRADES INDICATED BY SPOT ELEVATIONS AND CONTOURS AT 1'-0" INTERVALS, 3) THE LIMIT AND CHARACTER OF EXISTING AND PROPOSED IMPROVEMENTS, AND 4) CONTINUITY BETWEEN EXISTING AND PROPOSED GRADES.

VII. CALCULATIONS

CALCULATIONS ANALYZING THE EXISTING AND DEVELOPED CONDITIONS FOR THE 100-YEAR, 6-HOUR RAINFALL EVENT HAVE BEEN PREPARED FOR THAT PORTION OF THE PROJECT SITE AFFECTED BY THE PROPOSED IMPROVEMENTS. THE PROCEDURE FOR 40 ACRE AND SMALLER BASINS, AS SET FORTH IN THE REVISION OF SECTION 22.2, HYDROLOGY OF THE DEVELOPMENT PROCESS MANUAL, VOLUME 2, DESIGN CRITERIA, DATED JANUARY 1993, HAS BEEN USED TO QUANTIFY THE PEAK RATE OF DISCHARGE AND VOLUME OF RUNOFF GENERATED. AS DEMONSTRATED BY THESE CALCULATIONS, THE PROPOSED IMPROVEMENTS WILL RESULT IN A MINOR INCREASE IN PEAK RATE OF DISCHARGE AND VOLUME OF RUNOFF GENERATED BY THIS PROJECT.

VII. CONCLUSIONS

THE FOLLOWING CONCLUSIONS ARE PRESENTED AS A RESULT OF THE EVALUATIONS AND ANALYSES CONTAINED HEREIN:

1. THE IMPROVEMENTS PROPOSED HEREIN REPRESENT MODIFICATIONS TO AN EXISTING SITE WITHIN AN INFILL AREA
2. THE PROJECT SITE LIES WITHIN BASIN 7 CONFIRMED BY THE 2009 DRAINAGE SUBMITTAL
3. BASIN 7 IS ALLOWED FREE DISCHARGE IN ACCORDANCE WITH THE 2009 DRAINAGE SUBMITTAL
4. THE PROPOSED IMPROVEMENTS WILL MAINTAIN THE EXISTING DRAINAGE PATTERNS OF THIS PORTION OF THE SITE
5. A MINOR INCREASE IN THE PEAK RATE OF DISCHARGE AND VOLUME OF RUNOFF GENERATED BY THE PROJECT SITE IS EXPECTED AS A RESULT OF THE PROPOSED IMPROVEMENTS
6. THE PROPOSED IMPROVEMENTS DO NOT LIE WITHIN A DESIGNATED FLOOD HAZARD ZONE AND WILL NOT IMPACT THE DESIGNATED FLOOD HAZARD ZONE WITHIN CANDELARIA ROAD NE
7. THE PROPOSED IMPROVEMENTS WILL NOT ADVERSELY IMPACT DOWNSTREAM PROPERTIES OR DOWNSTREAM DRAINAGE CONDITIONS

CALCULATIONS

I. SITE CHARACTERISTICS

A. PRECIPITATION ZONE = 2

B. $P_{100,\,6\,HR} = P_{360}$ = 2.35

C. TOTAL PROJECT AREA (A_T) = 8,100 SF
0.19 AC

D. LAND TREATMENTS

1. EXISTING LAND TREATMENT

TREATMENT	AREA (SF/AC)	%
C	7,150 / 0.17	89
D	950 / 0.02	11

2. DEVELOPED LAND TREATMENT

TREATMENT	AREA (SF/AC)	%
C	1,720 / 0.04	21
D	6,380 / 0.15	79

II. HYDROLOGY

A. EXISTING CONDITION

1. VOLUME

$E_W = (E_A A_A + E_B A_B + E_C A_C + E_D A_D)/A_T$

E_W = (0.53*0.00) + (0.78*0.00) + (1.13*0.17) + (2.12*0.02)/0.19 = 1.23 IN

$V_{100,6\,HR} = (E_W/12)A_T$ = (1.23/12)0.19 = 0.0195 AC-FT = 850 CF

2. PEAK DISCHARGE

$Q_P = Q_{PA}A_A + Q_{PB}A_B + Q_{PC}A_C + Q_{PD}A_D$

$Q_P = Q_{100}$ = (1.56 * 0.00) +(2.28 * 0.00) +(3.14 * 0.17) + (4.70 * 0.02) = 0.6 CFS

B. DEVELOPED CONDITION

1. VOLUME

$E_W = (E_A A_A + E_B A_B + E_C A_C + E_D A_D)/A_T$

E_W = (0.53*0.00) + (0.78*0.00) + (1.13*0.04) + (2.12*0.15)/0.19 = 1.91 IN

$V_{100,\,6\,HR} = (E_W/12)A_T$ = (1.91/12)0.19 = 0.0302 AC-FT = 1,320 CF

2. PEAK DISCHARGE

$Q_P = Q_{PA}A_A + Q_{PB}A_B + Q_{PC}A_C + Q_{PD}A_D$

$Q_P = Q_{100}$ = (1.56*0.00) + (2.28*0.00) + (3.14*0.04) + (4.70*0.15) = 0.8 CFS

C. COMPARISON

1. VOLUME

$\Delta V_{100,\,6\,HR}$ = 1320 - 850 = 470 CF (INCREASE)

2. PEAK DISCHARGE

ΔQ_{100} = 0.8 - 0.6 = 0.2 CFS (INCREASE)

CONSTRUCTION NOTES:

1. TWO (2) WORKING DAYS PRIOR TO ANY EXCAVATION, CONTRACTOR MUST CONTACT NEW MEXICO ONE CALL SYSTEM 260-1990 (ALBUQUERQUE AREA), 1-800-321-ALERT(2537) (STATEWIDE), FOR LOCATION OF EXISTING UTILITIES AND ALBUQUERQUE PUBLIC SCHOOLS OR THEIR DESIGNATED SUBSURFACE UTILITY CONSULTANT FOR APS-OWNED UTILITIES.
2. PRIOR TO CONSTRUCTION, THE CONTRACTOR SHALL EXCAVATE AND VERIFY THE HORIZONTAL AND VERTICAL LOCATION OF ALL POTENTIAL OBSTRUCTIONS. SHOULD A CONFLICT EXIST, THE CONTRACTOR SHALL NOTIFY THE ENGINEER IN WRITING SO THAT THE CONFLICT CAN BE RESOLVED WITH A MINIMUM AMOUNT OF DELAY. THE CONTRACTOR SHALL BE RESPONSIBLE FOR ALL INTERPRETATIONS IT MAKES WITHOUT FIRST CONTACTING THE ENGINEER AS REQUIRED ABOVE.
3. ALL WORK ON THIS PROJECT SHALL BE PERFORMED IN ACCORDANCE WITH APPLICABLE FEDERAL, STATE AND LOCAL LAWS, RULES AND REGULATIONS CONCERNING CONSTRUCTION SAFETY AND HEALTH.
4. ALL CONSTRUCTION WITHIN PUBLIC RIGHT-OF-WAY SHALL BE PERFORMED IN ACCORDANCE WITH APPLICABLE CITY OF ALBUQUERQUE STANDARDS AND PROCEDURES.
5. IF ANY UTILITY LINES, PIPELINES, OR UNDERGROUND UTILITY LINES ARE SHOWN ON THESE DRAWINGS, THEY ARE SHOWN IN AN APPROXIMATE MANNER ONLY, AND SUCH LINES MAY EXIST WHERE NONE ARE SHOWN. IF ANY SUCH EXISTING LINES ARE SHOWN, THE LOCATION IS BASED UPON INFORMATION PROVIDED BY THE OWNER OF SAID UTILITY, AND THE INFORMATION MAY BE INCOMPLETE, OR MAY BE OBSOLETE BY THE TIME CONSTRUCTION COMMENCES. THE ENGINEER HAS CONDUCTED ONLY PRELIMINARY INVESTIGATION OF THE LOCATION, DEPTH, SIZE, OR TYPE OF EXISTING UTILITY LINES, PIPELINES, OR UNDERGROUND UTILITY LINES. THIS INVESTIGATION IS NOT CONCLUSIVE, AND MAY NOT BE COMPLETE, THEREFORE, MAKES NO REPRESENTATION PERTAINING THERETO, AND ASSUMES NO RESPONSIBILITY OR LIABILITY THEREFOR. THE CONTRACTOR SHALL INFORM ITSELF OF THE LOCATION OF ANY UTILITY LINE, PIPELINE, OR UNDERGROUND UTILITY LINE IN OR NEAR THE AREA OF THE WORK IN ADVANCE OF AND DURING EXCAVATION WORK. THE CONTRACTOR IS FULLY RESPONSIBLE FOR ANY AND ALL DAMAGE CAUSED BY ITS FAILURE TO LOCATE, IDENTIFY AND PRESERVE ANY AND ALL EXISTING UTILITIES, PIPELINES, AND UNDERGROUND UTILITY LINES. IN PLANNING AND CONDUCTING EXCAVATION, THE CONTRACTOR SHALL COMPLY WITH STATE STATUTES, MUNICIPAL AND LOCAL ORDINANCES, RULES AND REGULATIONS, IF ANY, PERTAINING TO THE LOCATION OF THESE LINES AND FACILITIES.
6. THE DESIGN OF PLANTERS AND LANDSCAPED AREAS IS NOT PART OF THIS PLAN. ALL PLANTERS AND LANDSCAPED AREAS ADJACENT TO THE BUILDING(S) SHALL BE PROVIDED WITH POSITIVE DRAINAGE TO AVOID ANY PONDING ADJACENT TO THE STRUCTURE. FOR CONSTRUCTION DETAILS, REFER TO LANDSCAPING PLAN.

EROSION CONTROL MEASURES:

1. THE CONTRACTOR SHALL ENSURE THAT NO SOIL ERODES FROM THE SITE INTO PUBLIC RIGHT-OF-WAY OR ONTO PRIVATE PROPERTY.
2. THE CONTRACTOR SHALL PROMPTLY CLEAN UP ANY MATERIAL EXCAVATED WITHIN THE PUBLIC RIGHT-OF-WAY SO THAT THE EXCAVATED MATERIAL IS NOT SUSCEPTIBLE TO BEING WASHED DOWN THE STREET.
3. WHEN APPLICABLE, CONTRACTOR SHALL SECURE "TOPSOIL DISTURBANCE PERMIT" FROM THE CITY AND/OR FILE A NOTICE OF INTENT (N.O.I.) WITH THE EPA PRIOR TO BEGINNING CONSTRUCTION.

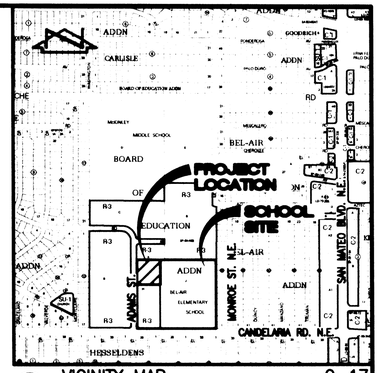

E5 VICINITY MAP G-17
SCALE: 1" = 750'

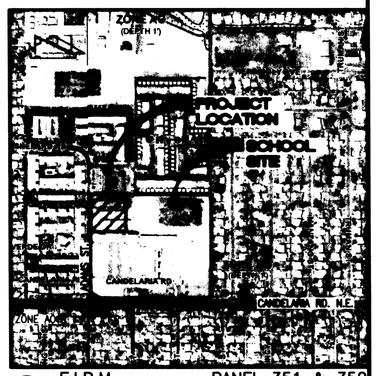

E5 F.I.R.M. PANEL 351 & 352 OF 825
SCALE: 1" = 500'
DATE: 9-26-2008

LEGAL DESCRIPTION

TRACTS H AND J, BEL AIR ELEMENTARY SCHOOL, ALBUQUERQUE, NEW MEXICO.

BENCHMARKS

PROJECT BENCHMARK

ACS BENCHMARK 9-G17, "□" CUT CHISELED ON TOP OF CONCRETE CURB AT THE WNW CURB RETURN LOCATED IN THE NORTHWEST QUADRANT OF THE INTERSECTION OF CANDELARIA ROAD N.E. AND SAN MATEO BOULEVARD N.E.
ELEVATION = 5204.30 FEET (NGVD 29)

T.B.M. #1

A REBAR WITH CAP STAMPED "LS 7719" TAGGED WITH WASHER STAMPED "NMPS 11184", AT THE NORTHWEST CORNER OF THE PROPERTY, AS SHOWN ON SHEET 2.
ELEVATION = 5171.37 FEET (NGVD 29)

△ **RECORD DRAWING**

09-02-2011
JEFFREY G. MORTENSEN NEW MEXICO 8547 PROFESSIONAL ENGINEER
03-22-2012

HIGH MESA Consulting Group
6010-B MIDWAY PARK BLVD. NE • ALBUQUERQUE, NEW MEXICO 87109
PHONE: 505.345.4250 • FAX: 505.345.4254 • www.highmesacg.com

DRAINAGE PLAN AND CALCULATIONS
P.A.P.A. CHARTER SCHOOL AT
BEL AIR ELEMENTARY SCHOOL
3000 ADAMS NE

DESIGNED BY	J.G.M.
DRAWN BY	J.Y.R./E.J.S.
APPROVED BY	J.G.M.

NO.	DATE	BY	
△	02/12	B.E.E.	RECORD DRAWING

JOB NO.	2011.180.2
DATE	08-2011
SHEET	6 OF 11

File Path: P:\DATA\2011\180.2\DWG\RECORD\
File Name: 111802_SHEAB.DWG
Plot Date: 02-23-2012
Plot Time: 3:04 pm

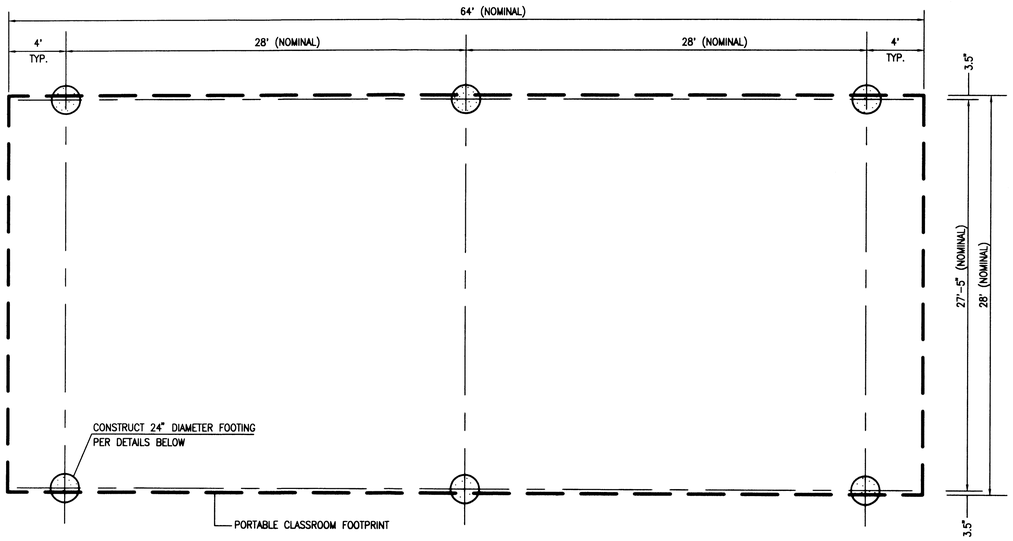

C1 DOUBLE PORTABLE CLASSROOM FOUNDATION PLAN

SCALE: 1" = 5' - 0"

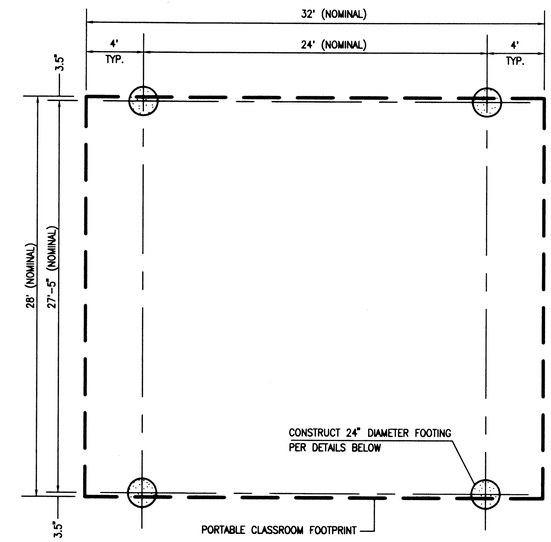

C4 SINGLE PORTABLE CLASSROOM FOUNDATION PLAN

SCALE: 1" = 5' - 0"

FOUNDATION AND PORTABLE INSTALLATION NOTES:

1. FOUNDATION LOCATIONS SHALL BE STAKED BY THE PROJECT SURVEYOR UNDER CONTRACT WITH THE OWNER.
2. THE CONTRACTOR SHALL NOTIFY THE ENGINEER WHEN FOUNDATIONS HAVE BEEN EXCAVATED AND ALL FORMS SET.
3. PRIOR TO POURING FOUNDATIONS, THE ENGINEER, OR HIS REPRESENTATIVE, SHALL OBSERVE AND APPROVE THE WORK FOR COMPLIANCE WITH THE PLANS AND SPECIFICATIONS.
4. THE ENGINEER, OR HIS REPRESENTATIVE, SHALL BE PRESENT TO OBSERVE THE POURING OF CONCRETE WITHIN THE FOUNDATION FORMS.
5. UPON COMPLETION OF CONSTRUCTION OF THE FOUNDATIONS, THE PROJECT SURVEYOR SHALL OBTAIN AS-BUILT MEASUREMENTS FOR THE HORIZONTAL AND VERTICAL LOCATIONS OF EACH FOUNDATION.
6. PRIOR TO INSTALLATION OF THE PORTABLE CLASSROOM BUILDINGS, THE ENGINEER SHALL REVIEW THE AS-BUILT SURVEY DATA AND PREPARE A FOUNDATION CERTIFICATION. PORTABLE BUILDINGS SHALL NOT BE INSTALLED WITHOUT THE CONSENT OF THE ENGINEER.
7. A PRE-INSTALLATION MEETING SHALL BE CONDUCTED PRIOR TO INSTALLATION OF THE PORTABLE CLASSROOM BUILDINGS TO DETERMINE THE CRITERIA FOR ALIGNING EACH BUILDING WITH RESPECT TO THE AS-CONSTRUCTED FOUNDATION LOCATIONS. ANY BUILDING INSTALLED IN ADVANCE OF A PRE-INSTALLATION MEETING SHALL BE ADJUSTED TO THE SATISFACTION OF THE OWNER AND THE ENGINEER AT NO ADDITIONAL COST TO THE OWNER.

⚠ RECORD INFORMATION LEGEND

CONSTRUCT	RECORD INFORMATION (VERIFIED BY ENGINEER)
✓	AS-CONSTRUCTED = AS-DESIGNED (VERIFIED BY ENGINEER)
9.6" 7.4"	RECORD INFORMATION (VERIFIED BY ENGINEER)
@ 31.25 .22	RECORD INFORMATION (VERIFIED BY ENGINEER)
✓P	AS-CONSTRUCTED = AS-DESIGNED (VERIFIED BY AS-BUILT SURVEY)
9.6" 7.4"	RECORD INFORMATION FROM AS-BUILT SURVEY
+26.4	RECORD INFORMATION FROM AS-BUILT SURVEY
@ 31.25 .22	RECORD INFORMATION FROM AS-BUILT SURVEY

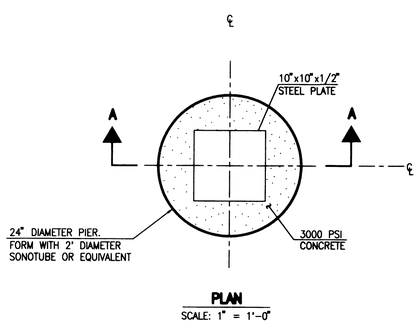

PLAN

SCALE: 1" = 1'-0"

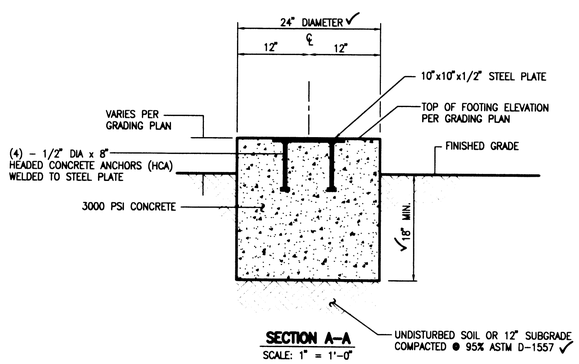

SECTION A-A

SCALE: 1" = 1'-0"

A1 FOOTING DETAILS

SCALE: 1" = 1'-0"

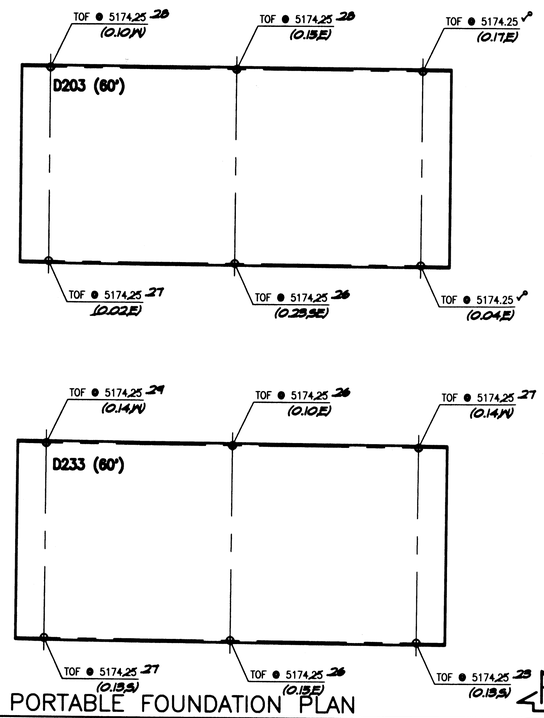

A4 PORTABLE FOUNDATION PLAN

SCALE: 1" = 10'-0"

⚠ CERTIFICATE OF SUBSTANTIAL COMPLIANCE

I, JEFFREY G. MORTENSEN, NMPE 8547, OF THE FIRM HIGH MESA CONSULTING GROUP, HEREBY CERTIFY THAT THE IMPROVEMENTS DEPICTED HEREON HAVE BEEN INSPECTED BY ME OR PERSONNEL UNDER MY DIRECT SUPERVISION AND, TO THE BEST OF MY KNOWLEDGE AND BELIEF, HAVE BEEN CONSTRUCTED WITHIN ACCEPTABLE CONSTRUCTION TOLERANCES AND IN ACCORDANCE WITH THE DESIGN INTENT OF THE APPROVED PLAN DATED 09-02-2011. THE RECORD INFORMATION EDITED ONTO THIS ORIGINAL DESIGN DOCUMENT HAS BEEN OBTAINED FROM AN AS-BUILT SURVEY DATED 11-07-2011 CONDUCTED BY HIGH MESA CONSULTING GROUP UNDER THE DIRECTION OF CHARLES G. CALA, JR., NMPS 11184, AND IS TRUE AND CORRECT TO THE BEST OF MY KNOWLEDGE AND BELIEF.

THIS RECORD INFORMATION IS NOT NECESSARILY COMPLETE AND INTENDED ONLY TO VERIFY SUBSTANTIAL COMPLIANCE OF THE DESIGN INTENT OF THE FOUNDATION PORTION OF THIS PROJECT. THOSE RELYING ON THIS DOCUMENT ARE ADVISED TO OBTAIN INDEPENDENT VERIFICATION OF ITS ACCURACY BEFORE USING IT FOR ANY OTHER PURPOSE. THIS CERTIFICATION IS SUBMITTED TO DOCUMENT COMPLIANCE FOR THE OWNER.

JEFFREY G. MORTENSEN, NMPE 8547

DATE 11-08-2011

JEFFREY G MORTENSEN NEW MEXICO 8547 REGISTERED PROFESSIONAL ENGINEER

⚠

RECORD DRAWING

FOR CERTIFICATION, SEE SHEET 1

09-02-2011

JEFFREY G MORTENSEN NEW MEXICO 8547 REGISTERED PROFESSIONAL ENGINEER

HIGH MESA Consulting Group

6010-B MIDWAY PARK BLVD. NE • ALBUQUERQUE, NEW MEXICO 87109

PHONE: 505.345.4250 • FAX: 505.345.4254 • www.highmesacg.com

TYPICAL APS PORTABLE CLASSROOM FOUNDATION PLAN

P.A.P.A. CHARTER SCHOOL AT BEL AIR ELEMENTARY SCHOOL

3000 ADAMS NE

DESIGNED BY J.G.M.

DRAWN BY J.Y.R.

APPROVED BY J.G.M.

NO.	DATE	BY	
⚠	11/11	B.E.E.	FOUNDATION CERTIFICATION

JOB NO. 2011.180.2

DATE 08-2011

SHEET 10 OF 11

File Path: E:\DATA\2011.180.2\ENG\R-Plot Date: 11-08-2011

File Name: 111802_SH10-R1.DWG Plot Time: 09:21 am