HYDROLOGY

G21/D21B

TWO PLANS

2 PLANS FOR

JUAN TABO OFFICE

PARK - LOT 1

G21- D21B

LEGAL DESCRIPTION: LOT 1, JUAN TABO BUSINESS PARK

BENCH MARKS

PROJECT BENCH MARK IS A SQUARE CHISELED ON TOP OF SIDEWALK @ NORTHEAST CORNER OF LOT 7 OF JUAN TABO BUSINESS PARK: MSL ELEV = 5695.58 AS IS RECORDED ON SUBDIVISION PLAT OF JUAN TABO BUSINESS PARK. THIS BM IS TIED TO BRASS CAP ACS JT-1A: MSL ELEV = 5721.248.

NOTES

TO CONTROL EROSION, AT THE START OF CONSTRUCTION, CONTRACTOR SHALL CONSTRUCT AT THE SOUTH PROPERTY LINE EITHER (1) THE LOW CMU WALL AS SHOWN ON THE PLANS OR (2) A 1-1/2 FOOT HIGH COMPACTED EARTH BERM.

CONTRACTOR SHALL CONTROL DUST BY WETTING OR COVERING EXPOSED EARTH OR BY OTHER EFFECTIVE MEANS.

PROVIDE POSITIVE DRAINAGE AWAY FROM BUILDING. IN NO CASE, DURING CONSTRUCTION OR AFTERWARD, SHALL WATER BE ALLOWED TO POND AGAINST THE WALLS OR FOUNDATIONS.

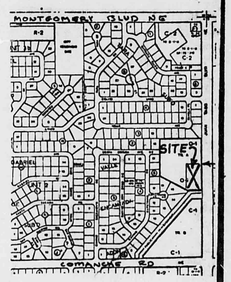

VICINITY MAP

G-21-Z

9583 SQFT
PARKING REQ. 48 SPACES

PARKING INDICATED
STANDARD - 34
COMPACT - 10
HANDICAPED - 2
46 SPACES

RECEIVED
JAN 10 1986
HYDROLOGY SECTION

LEGEND

	EXISTING CONTOURS
	PROPOSED CONTOURS
	DIRECTION OF FLOW
	EXISTING ELEVATION
	PROPOSED ELEVATION
	EASEMENT EDGE
T.O.P.	TOP OF PAVEMENT

NOTE:
SITE IS NOT LOCATED IN 100 YEAR FLOOD HAZARD AREA PER FEMA PANEL # 350002-0015

GRADING & DRAINAGE PLAN
JUAN TABO OFFICE PARK

1" = 10.0'

JUAN TABO BLVD
SCALE: 1" = 10'

AUGUST T. MOSHMANN
STATE OF NEW MEXICO
NO. 8148
REGISTERED PROFESSIONAL ENGINEER
2/10/85

REVISION 1-10-86

STATE OF NEW MEXICO
JACK T. BELCHER
No. 1378
11-9-85
REGISTERED ARCHITECT

G21/D21B

REVISIONS

FOR: Juan Tabo Office Park

Jack T Belcher A.I.A.
P.O. BOX 1742 LAS CRUCES, NM 88004

DATE 11-8-1985

PAGE 1 OF

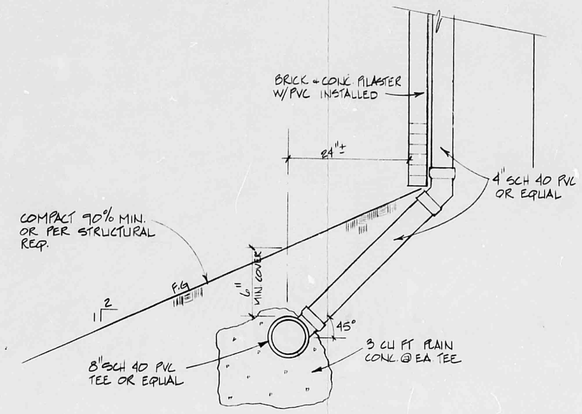

1/S3 ROOF DRAIN TO 8" PVC
SCALE: 3/4"=1'0"

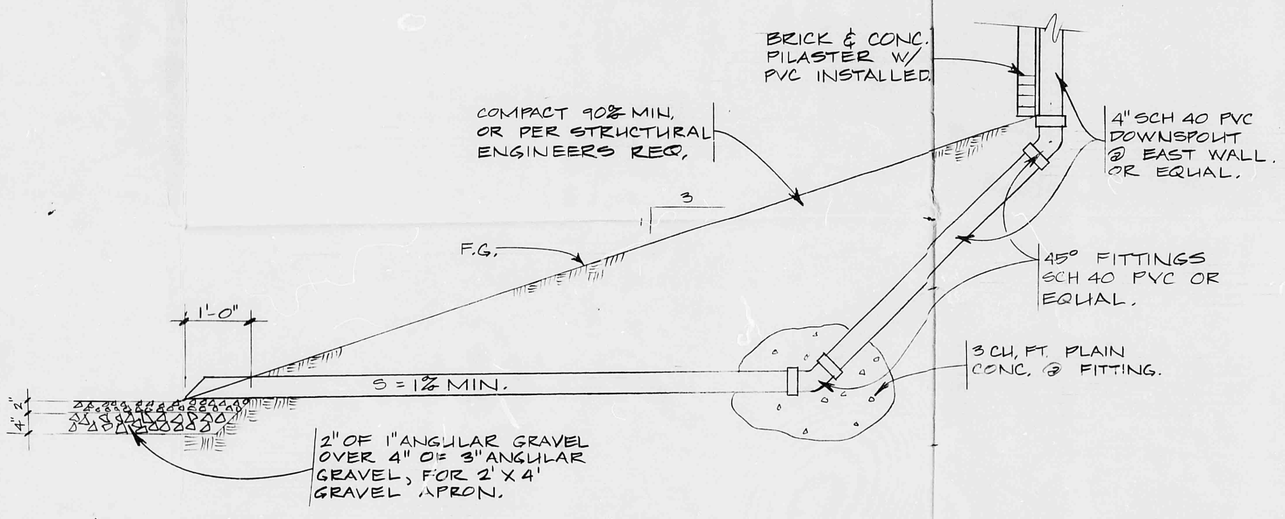

4/S3 EAST DOWNSPOT DETAIL.
3/4" = 1'-0"

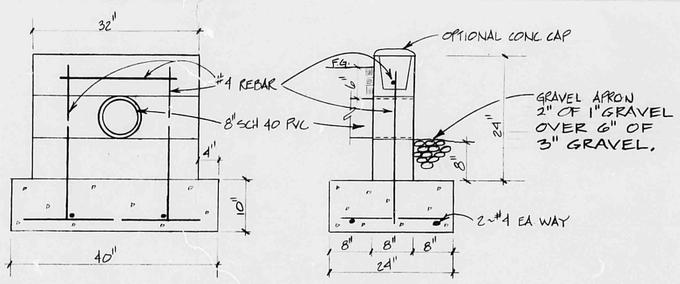

2/S3 CMU HEAD WALL W/8" PVC
SCALE: 3/4"=1'0"

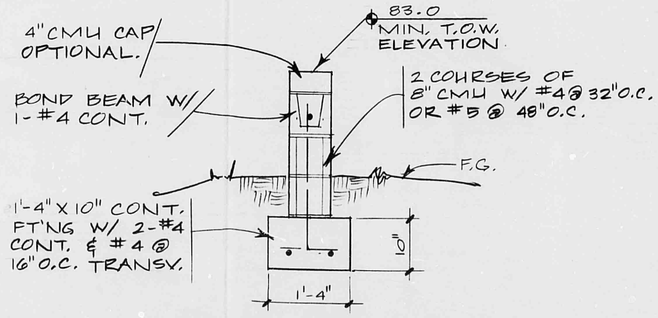

5/S3 CMU WALL DETAIL
3/4" = 1'-0"

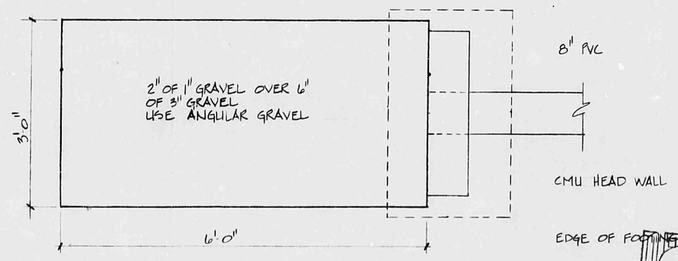

3/S3 GRAVEL APRON
SCALE: 3/4"=1'-0"

RECEIVED
JAN 10 1986
HYDROLOGY SECTION

GRADING & DRAINAGE DETAILS FOR JUAN TABO OFFICE PARK

AUGUST F. MOSINANA
STATE OF NEW MEXICO
NO. 6148
REGISTERED PROFESSIONAL ENGINEER
12/10/85

S-3

G21/D21B S3