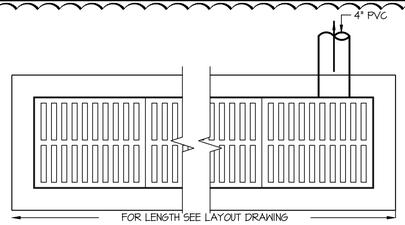

NOTE: GRATING TO BE EQUAL TO NEENAH R-4943-AB WITH "C" TYPE OF GRATING.

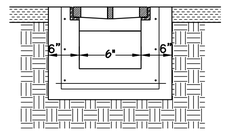

TYPICAL CROSS SECTION

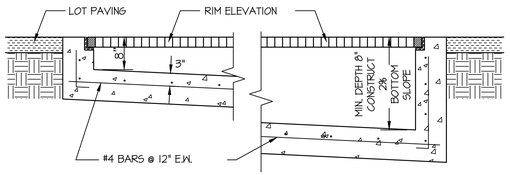

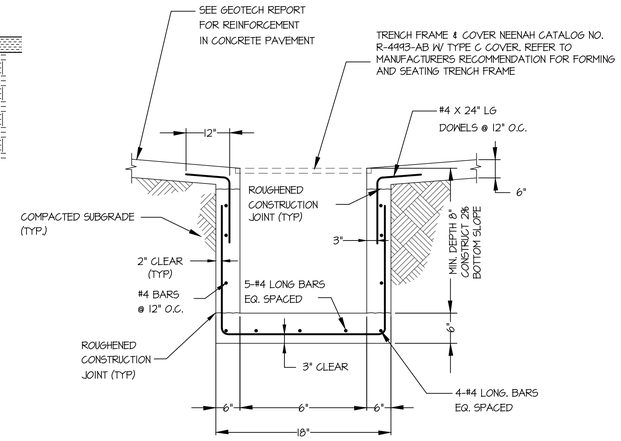

TRENCH DRAIN @ TRASH ENCLOSURE

NOT TO SCALE

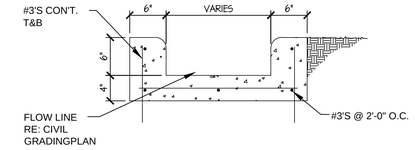

CONCRETE FLUME

NOT TO SCALE

GENERAL NOTES:

1. BEDDING SHALL BE CLASS I-A WORKED BY HAND. IF GROUNDWATER IS ANTICIPATED, THEN BEDDING SHALL BE CLASS I-B COMPACTED TO 85% STANDARD PROCTOR.
2. HAUNCHING SHALL BE WORKED AROUND THE PIPE BY HAND TO ELIMINATE VOIDS AND SHALL BE CLASS I-A OR CLASS I-B OR CLASS II COMPACTED TO 85% PROCTOR.
3. INITIAL BACKFILL SHALL BE CLASS I-A WORKED BY HAND, OR CLASS I-B OR CLASS II COMPACTED TO 85% STANDARD PROCTOR.
4. INITIAL BACKFILL NOT UNDER PAVED AREAS CAN BE CLASS III COMPACTED TO 90% STANDARD PROCTOR.
5. FINAL BACKFILL SHALL BE CLASS I, II, OR III COMPACTED AS NOTED IN NOTES 3 AND 4.
6. FINAL BACKFILL NOT UNDER PAVED AREAS CAN BE CLASS IV-A COMPACTED TO 95% STANDARD PROCTOR.
7. ALL MATERIALS ARE CLASSIFIED IN ACCORDANCE WITH ASTM D 2321-89.
8. ALL MATERIALS SHALL BE INSTALLED IN MAXIMUM 8" LOOSE LIFTS IN ACCORDANCE WITH ASTM D 698. CLASS III AND IV-A MATERIALS SHALL BE COMPACTED NEAR OPTIMUM MOISTURE CONTENT.
9. FILL SALVAGED FROM EXCAVATION SHALL BE FREE OF DEBRIS, ORGANICS AND ROCKS LARGER THAN 3".
10. ALL TRENCH EXCAVATIONS SHALL BE SLOPED, SHORED, SHEETED, BRACED, OR OTHERWISE SUPPORTED IN COMPLIANCE WITH OSHA REGULATIONS AND LOCAL ORDINANCES. (SEE SPECIFICATIONS)

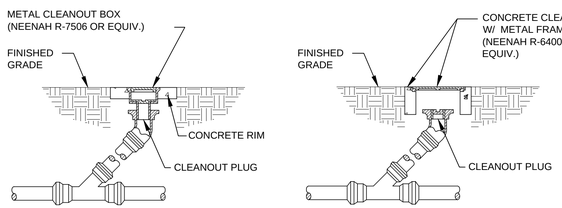

CLEANOUT IN UNPAVED AREAS

CLEANOUT IN PAVED AREAS

NOTE:
G.C. IS TO INSTALL CLEANOUT AT ANY PIPING ANGLE CHANGES AND AT EVERY 50' IN PIPING RUNS GREATER THAN 100' IN LENGTH.

EXTERIOR CLEANOUT

NOT TO SCALE

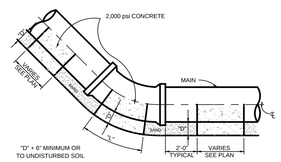

PIPE SIZE	11" - 15"		22" - 30"		45"		90"	
	L	MAX. VOL.	L	MAX. VOL.	L	MAX. VOL.	L	MAX. VOL.
6"	0.42	0.02	0.45	0.02	0.50	0.02	1.00	0.04
8"	0.42	0.02	0.45	0.02	0.80	0.04	1.40	0.06
10"	0.42	0.03	0.58	0.03	1.15	0.06	2.03	0.11
12"	0.42	0.04	0.73	0.05	1.43	0.09	2.53	0.17
16"	0.42	0.08	0.74	0.14	1.48	0.27	2.61	0.48
18"	0.66	0.14	1.30	0.28	SEE PLAN DIRECTION OF THRUST BLOCKING		SEE PLAN DIRECTION OF THRUST BLOCKING	
20"	0.77	0.18	1.53	0.36				
18"	0.88	0.18	1.74	0.37				
20"	1.03	0.24	2.04	0.38				
18"	1.05	0.22	2.03	0.43				
20"	1.20	0.28	2.38	0.56				

CONCRETE CRADLE AT VERTICAL BENDS

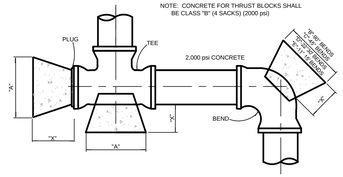

BLOCKING TABLE

DIMENSION "X" TO BE A MINIMUM OF 1'. BUT IS TO BE INCREASED WHERE NECESSARY TO PROVIDE BEARING AGAINST UNDISTURBED TRENCH WALL.

PIPE SIZE	"X" DIM.	PLUGS & TEES			90° BENDS			45° BENDS			22° 30' BENDS			11° 15' BENDS		
		"A"	MIN. AREA	MAX. VOL.	"B"	MIN. AREA	MAX. VOL.	"C"	MIN. AREA	MAX. VOL.	"D"	MIN. AREA	MAX. VOL.	"E"	MIN. AREA	MAX. VOL.
4"	1'-0"	1'-0"	0.83	0.05	1'-0"	0.83	0.05	1'-0"	0.83	0.05	1'-0"	0.83	0.05	1'-0"	0.83	0.05
6"	1'-6"	1'-0"	1.06	0.09	1'-2"	1.50	0.09	1'-0"	0.83	0.05	1'-0"	0.83	0.05	1'-0"	0.83	0.05
8"	1'-6"	1'-3"	1.89	0.11	1'-6"	2.66	0.16	1'-3"	1.44	0.08	1'-0"	0.83	0.05	1'-0"	0.83	0.05
10"	1'-6"	1'-9"	2.95	0.17	2'-0"	4.17	0.24	1'-6"	2.26	0.13	1'-3"	1.15	0.07	1'-0"	0.83	0.05
12"	1'-6"	2'-0"	4.25	0.24	2'-3"	6.00	0.34	1'-9"	3.25	0.18	1'-3"	1.65	0.10	1'-0"	0.83	0.05
16"	2'-0"	2'-7"	7.34	0.56	3'-0"	10.65	0.79	2'-3"	5.76	0.43	1'-8"	2.94	0.22	1'-2"	1.48	0.11
18"	2'-0"	2'-11"	7.70	0.57	3'-8"	10.89	0.82	2'-6"	5.89	0.44	1'-10"	3.01	0.22	1'-5"	1.51	0.11
20"	2'-0"	3'-3"	3.70	0.59	3'-9"	11.12	0.59	2'-9"	6.01	0.45	2'-0"	3.07	0.23	1'-7"	1.54	0.12
24"	2'-0"	3'-8"	11.33	0.84	4'-3"	16.00	1.20	3'-2"	8.65	0.65	2'-6"	4.42	0.33	1'-10"	2.22	0.17

NOTE: CALCULATIONS IN MINIMUM AREA COLUMN ARE IN SQUARE FEET. CALCULATIONS IN MAXIMUM VOLUME COLUMN ARE IN CUBIC YARDS.

CONCRETE THRUST BLOCKING

NOTE: MEGA LUG RETAINER GLANDS SHALL BE USED ON ALL FITTINGS AND BENDS

THRUST BLOCKING

NOT TO SCALE

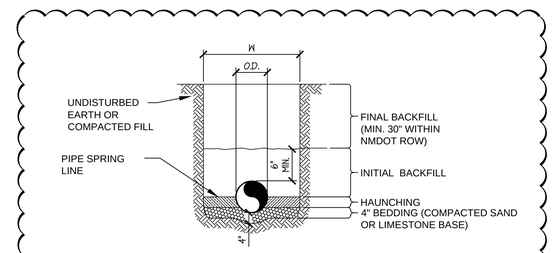

PIPE DIA.	W
≤12"	O.D. OF PIPE + (12" TO 18")
>12"	_ > O.D. OF PIPE + 18"

UTILITY TRENCHING & BEDDING

NOT TO SCALE

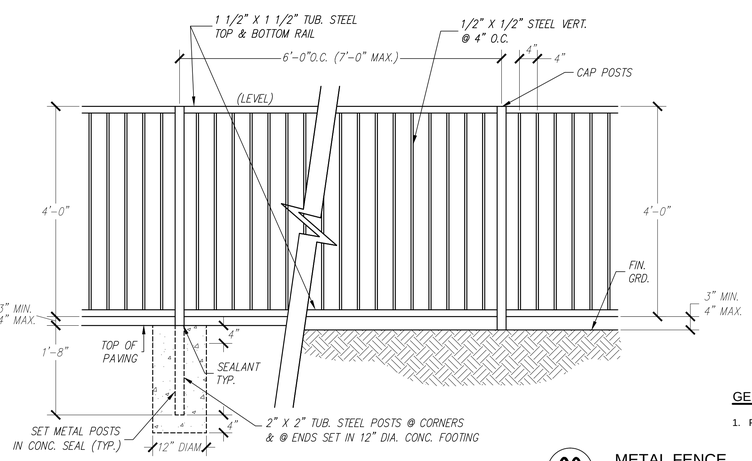

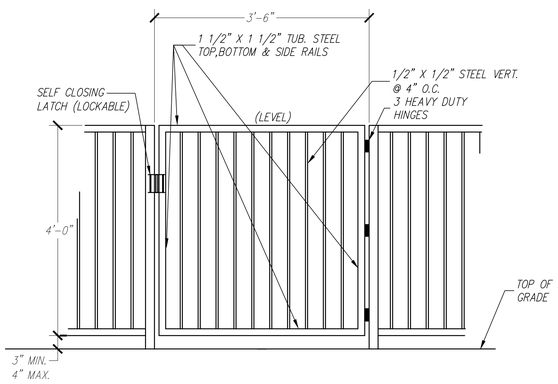

GENERAL NOTES:

1. POWDER COATED BRONZE.

METAL FENCE

NOT TO SCALE

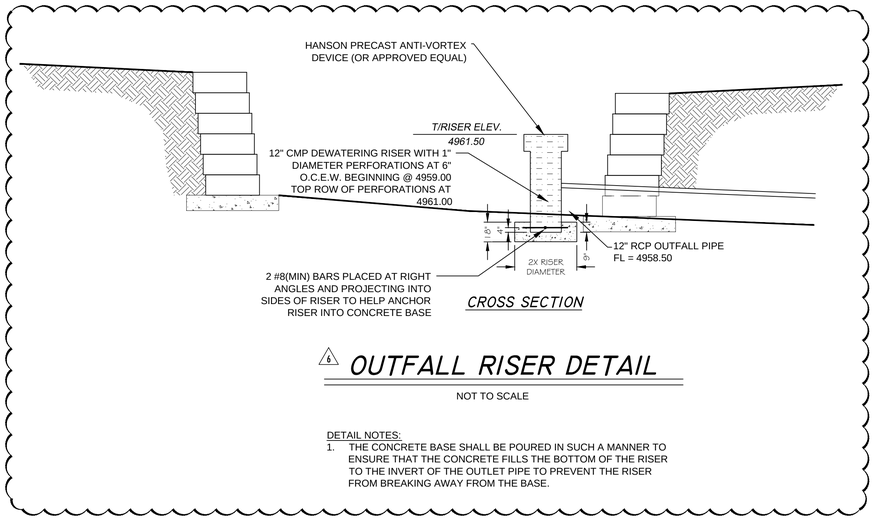

OUTFALL RISER DETAIL

NOT TO SCALE

DETAIL NOTES:
1. THE CONCRETE BASE SHALL BE POURED IN SUCH A MANNER TO ENSURE THAT THE CONCRETE FILLS THE BOTTOM OF THE RISER TO THE INVERT OF THE OUTLET PIPE TO PREVENT THE RISER FROM BREAKING AWAY FROM THE BASE.

REV	DATE	DESCRIPTION	BY	ISSUE REF
----	3/1/2013	ISSUE FOR PERMIT	HJM	----
----	5/17/2013	PER CITY COMMENTS	HJM	----
6	11/19/2013	PER CITY AND NMDOT COMMENTS	HJM	----
----	----	----	----	----

Adams
910 S. Kimball Avenue ■ Southlake, Texas 76092 ■ (817) 329-3200

ROBERT A. ALARID
NEW MEXICO
15142
LICENSED PROFESSIONAL ENGINEER
11-19-13

OFFICE: GREATER SOUTHWEST REGION
ADDRESS: KROC DRIVE - OAK BROOK, ILLINOIS 60521

McDONALD'S®

THESE PLANS AND SPECIFICATIONS ARE THE PROPERTY OF MCDONALD'S CORPORATION AND SHALL NOT BE REPRODUCED WITHOUT THEIR WRITTEN PERMISSION.

SEC OF 12TH ST. & INDIAN SCHOOL RD.
ALBUQUERQUE,NEW MEXICO

MCDONALD'S L/C: 030-0230
ADAMS ENGINEERING No. 2009.056

PLAN APPROVALS

SIGNATURE (2 REQUIRED)	DATE
REGIONAL MGR.	
CONST. MGR.	
OPERATIONS DEPT.	
REAL ESTATE DEPT.	

CO-SIGN SIGNATURES

CONTRACTOR	
OWNER	

STATUS	DATE	BY
DATE DRAWN	----	----
PLAN CHECKED	11/19/13	DWL
AS-BUILT		

C10.5

FULL PATH: I:\Projects\2009\2009.056 McDonalds - Albuquerque NM (1-40 & 12th)\Drawings\1)Projects\2009\2009.056 McDonalds - Albuquerque NM (1-40 & 12th)\Drawings\11 STANDARD DETAILS
PLOTTER: DWG To PDF.pc3
PLOT TIME: 4:52:03 PM
PLOT DATE: Tuesday, November 19, 2013
PLOTTED BY: Heather Maccomber
FILENAME: 11 STANDARD DETAILS.dwg