HYDROLOGY H13/D14 2 PLANS

H13/D14

2 Plans

City of Albuquerque
P.O. BOX 1293 ALBUQUERQUE, NEW MEXICO 87103

DESIGN HYDROLOGY SECTION
123 Central NW, Albuquerque, NM 87102
(505) 766-7644

December 18, 1984

Mr. Marvin Kortum
1605 Speakman Drive SE
Albuquerque, NM 87123

REF: GRADING AND DRAINAGE PLAN FOR RICE'S DURANES ADDITION NUMBER 1 (H13-D14)
RECEIVED OCTOBER 11, 1984 WITH SUPPLEMENTAL INFORMATION RECEIVED
DECEMBER 7, 1984

Dear Mr. Kortum:

This office is not in favor of the proposed drainage scheme. However, since you and the owner prefer this solution and are willing to accept all responsibilities and maintenance associated with the pumping scheme, this office will not hold up the permits for this site.

Please be advised that for final plat sign-off the appropriately required private drainage easements will need to be shown. The construction will have to insure that the ponded water will not get onto adjacent property nor be ponded closer than 15 feet plus the required setback to any structure.

Also, the private infrastructure improvements will have to be processed through the design review process for sign-off.

Please attach a copy of the plan, dated October 11, 1984, to the construction set prior to Hydrology sign-off.

Should you have any questions, please contact me at 766-7644.

Cordially,

Billy J. Goolsby

Billy J. Goolsby, PE
Civil Engineer/Hydrology

BJG:mrk

Marvin R. Kortum
1605 Speakman Dr. SE
Albuquerque, N.M. 87123

December 7, 1984

City of Albuquerque
Design Hydrology Section
123 Central NW
Albuquerque, N.M. 87102

Re: A. Grading and Drainage Plat for Lot 22, Rice's Duranes Addition Number 1 (H13-D14)

B. Hydrology letter dated: November 21, 1984

Dear Mr. Goolsby,

On November 21, 1984, Mr. Crawford, the owner/developer of Lot 22, and I discussed with you your concerns about the pressure pump storm drain system for the proposed Lot 22 Subdivision.

Attached is the Homeowners Association Agreement which is proposed by the developer to be incorporated into the land deed documents. I believe this course of action should alleviate the concerns expressed by you at our meeting, specifically, that the burden of operating the storm drain system should be shared by all land owners within the subdivision who are beneficiaries of the system.

I request your review and comments on the drainage plan and Homeowners Agreement as required for approval of the Grading and Drainage Plan.

Also attached is the revised drawing for construction within the city right-of-way. When that document is approved, I will make the corrections on the Grading and Drainage Plan and provide the revised copy for your files. Those changes are in location and detailing of water and sewer, and do not alter the grading and drainage features.

Thank you,

Marvin R. Kortum
Civil Engineer

MRK:tjs

Enclosure

RECEIVED
DEC 07 1984
DESIGN HYDROLOGY
SECTION

MILO COMPOUND
OWNERS AGREEMENT AND EASEMENTS

The undersigned Owners of Milo Compound, more particularly described as Lots 21-A, 21-B, 21-C, 21-D, and 22-A, 22-B, 22-C, 22-D, and 22-E, Rices Duranes Addition #1, hereby agree as follows:

1. Agreement and Easements Binding upon Subsequent Owners. The undersigned Owners are the developers and initial Owners of the Milo Compound. This Agreement is intended to create legal rights and obligations which will be assumed by subsequent owners. This agreement and the easements created herein shall run with the land and be binding upon the successors and assigns of the undersigned Owners.

2. Utility Easements. An easement is hereby created for the installation, maintenance and repair of water and sewer lines for the benefit of all units Such lines are described upon Exhibit A to this Agreement and incorporated herein by reference. Townhome owners agree to hold City of Albuquerque harmless from any claims or disputes arising from this Agreement.

3. Milo Compound Homeowners' Association. The Owners agree to form an unincorporated association known as the Milo Compound Homeowners' Association for the purpose of managing matters of mutual interest to the Owners. Meetings shall be held at least annually for the purpose of conducting such business as may be necessary.

4. Metering of Utilities. Water, sewer, refuse and other municipal utility assessments will be billed seperately to each individual townhome Owner.

5. Landscaping. Each Owner agrees to maintain front landscaping in a theme consistent with the other buildings. All Owners must agree in writing before a change of the landscaping can be made to a different format. There are no restrictions upon landscaping inside patio walls.

6. Easements for Maintenance. The Owners grant to adjoining Owners an easement of access at reasonable hours for the purpose of maintaining and repairing common walls and exterior surfaces which can only be reached by access upon the adjoining Owner's property.

7. Solar Easements. No addition or other construction shall be added to a unit which obstructs or impairs the ability of solar devices to function.

8. Drainage Easements. Each Owner grants to all other lots an easement for water drainage as shown on the drainage plan filed with the City Engineers Office of the City of Albuquerque as File # . The cost for the use and maintenance of the forced drainage pipe and pump on Lot 22-A shall be estimated based on current electrical rates plus a percentage for repair and maintenance and shall be jointly borne by all Owners. Should any Owner fail to pay his share within 30 days after it is due, a lien on his property to the other Owners may be created and enforced, bearing interest at 12% per annum plus any associated legal fees.

9. Real Property affected by this Agreement and Easements granted herein. The real estate submitted to this Agreement and the liens and easements created herein as particularly described as follows: Lots 21-A, 21-B, 21-C, 21-D and 22-A, 22-B, 22-C, 22-D and 22-E, being a replat of Lots 21 and 22, Rices Duranes Addition #1

City of Albuquerque
P.O. BOX 1293 ALBUQUERQUE, NEW MEXICO 87103

DESIGN HYDROLOGY SECTION
123 Central NW, Albuquerque, NM 87102
(505) 766-7644

November 21, 1984

Mr. Marvin Kortum
1605 Speakman Drive SE
Albuquerque, NM 87123

REF: GRADING AND DRAINAGE PLAN FOR LOT 22 OF RICE'S DURANES ADDITION NUMBER 1 (H13-D14) RECEIVED OCTOBER 11, 1984

Dear Mr. Kortum:

It has be brought to my attention that DRB action today (11/20/84) identified that a meeting is to be scheduled to discuss the drainage scheme for this site.

It is recommended that you contact this office to arrange an appropriate time to schedule this meeting.

Should you have any questions or comments, please contact me.

Yours truly,

Billy J. Goolsby

Billy J. Goolsby, PE
Civil Engineer/Hydrology

BJG:mrk

INFORMATION SHEET

PROJECT TITLE LOT 22 RICE'S DURANGO ADD #1 TYPE OF SUBMITTAL DRAINAGE REPORT

ZONE ATLAS PAGE NO. H-13 Div new CITY ADDRESS RIGG AVE N.W.

LEGAL DESCRIPTION LOT # 22 RICE'S DURANGO ADD # 1

ENGINEERING FIRM MARVIN R KURTUM CONTACT MARVIN R KURTUM

ADDRESS 1605 SPERAMINDR SE PHONE 299-0774
RUBUQUERQUE N.M.

OWNER HAP CRAWFORD CONTACT

ADDRESS PHONE

ARCHITECT CONTACT

ADDRESS PHONE

SURVEYOR S.W. SURVEY CONTACT

ADDRESS PHONE

CONTRACTOR CONTACT

ADDRESS PHONE

PRE-DESIGN MEETING:

X YES
___ NO
___ COPY OF CONFERENCE RECAP SHEET PROVIDED

PLEASE CHECK TYPE OF APPROVAL EXPECTED WITH THIS SUBMITTAL:

___ SKETCH PLAT APPROVAL
Y PRELIMINARY PLAT APPROVAL
Y SITE DEVELOPMENT PLAN APPROVAL
Y FINAL PLAT APPROVAL
___ BUILDING PERMIT APPROVAL
___ CERTIFICATE OF OCCUPANCY APPROVAL
X ROUGH GRADING PERMIT APPROVAL
___ GRADING/PAVING PERMIT APPROVAL
___ OTHER _____ (SPECIFY)

RECEIVED
OCT 11 1984
HYDROLOGY SECTION

DATE SUBMITTED: OCT 11 1984

BY: [signature]

PROJECT TITLE:	LOT 22 OF THE PLAT OF RICE'S DURANES ADDITION NO. 1
ZONE ATLAS:	H-13 _____ RICE AVENUE, N.W.
TYPE OF SUBMITTAL:	DRAINAGE REPORT AND EROSION CONTROL
LEGAL DESCRIPTION:	Lot numbered Twenty-two (22) of the plat of RICE'S DURANES ADDITION, No. 1, as the same is shown and designated on said plat thereof filed in the Office of the County Clerk of Bernalillo County, New Mexico on May 12, 1939.
ENGINEERING FIRM:	MARVIN R. KORTUM 1605 Speakman Dr. S.E. Albuquerque, New Mexico 87123 (505) 299-0774 Contact: Marvin R. Kortum
OWNER:	HAP CRAWFORD
ARCHITECT:	
SURVEYOR:	JERRY NICKELS
DATE SUBMITTED:	October 11, 1984
BY:	MARVIN R. KORTUM

MARVIN R. KORTUM
NEW MEXICO
6519
OCT 11 1984
REGISTERED PROFESSIONAL ENGINEER

RECEIVED
OCT 11 1984
DESIGN HYDROLOGY
SECTION

I. ON-SITE CONDITIONS:

A. Site Characteristics:

Lot 22, Rice's Duranes Addition consists of a generally rectangular tract, 315.33 feet along the west side, and 80.90 feet along the south side, 312.34 feet along the east side, and 80.00 feet along the north side, and consists of 0.58 acres. The surface is generally native soils. Lot 22-E of the proposed subdivision has an existing residential building. Lots 22-A, 22-B, 22-C and 22-D are essentially vacant other than for minor out buildings and miscellaneous homestead open storage. The north property line is the right-of-way for Rice Avenue, N.W. The east side abuts for private property, but is intermediate within a common access and utility easement which is 11 feet wide within lot 22, and 15 feet wide within lot 21. The south side abuts private property and includes a 10 foot wide ditch easement. The ditch easement is presently not in use. There is no evidence of an irrigation ditch nor any ready access to an existing irrigation lateral, as existing buildings, paved streets and developments block surface access. The ditch easement does provide a potential location for off-site flow away from the lot if the easement is continous and maintained, permitting flow down-slope to the west and south. The west property line abuts private property, lot 23, which is presently a garden for the adjacent residence.

B. Soils:

The soils, as identified on the Bernalillo County Soils Survey by the SCS, USDA are Gila clay loam, slopes 0 to 1% (Ge). The Gila series consists of deep well drained soils that formed in recent alluvium on the flood plains along the Rio Grande. Run off is slow, and the hazard of water erosion is slight. The engineering characteristics of the soil do not present undue constraints on the proposed use of the area for single or two story residences with paved or surfaced streets and parking aareas. The soils observed on the surface are sandy, with no plasticity, and appear to be reasonably classified. Structural foundations should be designed, and built based on additional subsurface exploration to insure that abandoned trash pits or privy sites are not built upon. The soils appear to have been used for miscellaneous agricultural and homesite purposes in the past.

C. Undeveloped Run Off:

The soils are identified as hydrologic soil group B, these soils which absorbed more water than is typical. There is no defined draining path on the tract, the area being generally level, with numerous surface irregularities. The south half of the property is a shallow depression, about 0.2 feet (3 inches) deep, and capable of collecting about 700 feet^3 of run off. The north edge of the property is elevated to match the curb and gutter along Rice Avenue. The elevation of the top of the curb is about 60.90. The elevation of the low spot of the depression is 58.7.

D. Direct Run Off Volume, Undeveloped Land:

The 6 hour 100 year frequency rainfall for lot 22 is 2.2 inches per NOAA Atlas 2, Volume IV (plate 22.2 D-1). The present surface is typical of pasture land in poor condition, for which a curve number (CN) of 79 is appropriate. (Plate 22.2, C-2). From plate 22.2, D-4 read direct run off volume is therefore:

$$0.8 \text{ in.} \times .58 \text{ acre} \times 43{,}560 \frac{\text{ft}^2}{\text{acre}} \times \frac{1\text{ft}}{12 \text{ in.}} = 1{,}645 \text{ ft}^3$$

In the undeveloped state, this run off will partially collect in the depression, about 700ft³, and the remainder would flow generally to the west and south, across adjacent properties, along or parallel to the ditch easement.

E. Peak Run Off, Undeveloped Land:

Using a slope of 1%, and a drainage path of 200 feet, a time of concentration of 2.7 minutes is obtained by the Kilpich Equation ($TC = .0078 \frac{L\ 0.77}{S\ .385}$). Use the rainfall intensity for 10 minutes, using the rainfall intensity factor of 2.15 (plate 22.2 D-2) and the rainfall of 2.2 inches (plate 22.2 D-1). Obtain a C factor from plate 22.2 C-1, C = .42, for type B soils, 20 percent impervious. Therefore, peak flow is estimated as Q = CIA = (.42)(2.15)(2.2)(.58) = 1.2 CFS (cubic feet per second).

F. Run Off From Developed Land:

The site is to be developed as five individual residential houses. For purposes of computing run off, the following surface uses will be considered.

TOTAL AREA	.58 ACRE	25,000 ft.²
5 residential buildings with garage at 2,000 ft./building		10,000 ft.²
5 concrete driveways		2,000
Gravel access driveways		3,000 ft.²
Landscaped yard		10,000 ft.²
Total impervious surface		15,000 ft.²
Percent impervious surface		60%

G. Direct Run Off For Developed Property:

The above indicates an area that compares favorably with the land use description for residential, average lot size of 1/8 acre or less (plate 22.2 C-2) for which a CN = 85 for group B soil is prescribed. Direct run off, from plate 22.2 C-4 is 1.0 inch, for a volume of 1 x 25,000 x 1/12 = 2,080 ft. This is an increase of 2,080 - 1,645 = 435 ft. over the present property in the undeveloped state.

H. Peak Run Off For The Developed Property:

The proposed site improvements will change existing run off drainage flow channels. It is planned that each individual lot will be enclosed with solid concrete and adobe walls. Run off will be mostly from the driveways, roofs and gravel access drives. Using the same peak flow data as above, but using a C factor (plate 22.2 C-1) of .63, the peak run off estimate is $Q = CFA = (.63)(2.15)(2.2)(.58) = 1.7$ CFS which corresponds to the 1.2 CFS for the undeveloped state.

I. Disposition Of Run Off From The Developed Property:

II. OFF-SITE FLOWS:

A. Major Terrain Features:

Lot 22 is not in a channel or natural flow path of any significant storm run off. The natural terrain is flat, with a slope generally from north to south of about 1 foot per 1,000 feet. The area is natural flood plain of the Rio Grande. It is greater than 2 miles from the east side mesa land, so is relatively unaffected by storm run off from the mesa or mountain side. In the past the area within 1 mile of lot 22 has been used as irrigated land. Major flow (1 to 2 feet deep) from the west and north are effectively blocked by the Alameda drain. A significant terrain feature to the south is Coronado Freeway, (Interstate-40) which consists of a berm elevated 5 or more feet above the immediate terrain. In the event of catastrophic flooding north or east of the Alameda drain and Coronado Freeway crossing, it is possible that there would be water back up to some 2 or 3 feet of depth in the vicinity of lot 22.

B. Local Terrain Features:

The terrain in the immediate vicinity of lot 22 has been significantly altered by man made features which greatly affect storm run off. 500 feet east of lot 22 is Rio Grande Boulevard, running generally north and south. Rio Grande Boulevard and the subsurface storm drain system along Rio Grande Boulevard provide for channeling of local storm run off into the Alameda drain, the drainage basin western edge being a line roughly 100 feet west of the Rio Grande Boulevard right-of-way (and 400 feet east of lot 22). Rice Avenue, running east to west, provides a channel for the lands immediately north of Rice Avenue, draining from the ridge line about 100 feet west of Rio Grande Boulevard toward the west, where it intersects Duranes Road and Amado Road, 500 feet west of lot 22. Lot 22 is within the local drainage basin which is drained by the Duranes Pump Sation, and the pipe system along Duranes Road, Flora Road, and Amado Road and beyond. The Albuquerque Master Drainage Study shows that the Duranes Pump Station capacity of 214 CFS is adequate to keep the ground surface above the 100 year flood gredient.

C. Local and Nuisance Run Off:

Local and nuisance run off affecting lot 22 are those from adjacent properties caused by direct precipitation. To a large extent, such nuisance flows have been stemmed by the building of small berms along properties lines which confine on-lot precipitation, and block inflow from adjacent lots. The quality and durability of such flow directers vary with owner interest and land use. Vacant land, corrals or garden plots may have little effective berming. A nearby lot (lot 19) which has four multi-appartment buildings has berms and ponding which has been designed and constructed to confine certain run off waters within its' property boundaries. As far as can be determined by surface observation, there is no established flow path, easement or drain for overflow from this property. Apparently overflow would cross adjacent private properties with uncontrolled flow toward the established basin drains along Floral Road and Amado Road. There is an established and recorded irrigation ditch easement 10 feet wide along the south of lot 22, the ditch easement extending from a point north of Rice's Duranes Addition No.1, and extending along the south boundary of the addition. At present there is no irrigation ditch along this easement, nor are there other indications of it being used for irrigation by means of underground piping.

III. LOT 22 STORM RUN OFF OPTIONS:

A. Relative Elevation:

Lot 22 is down-slope, or below grade of the adjacent public-right-of-way, which is Rice Avenue. The low top of curb elevation along Rice Avenue is 60.88, and the low flow line elevation is 60.18. One option would be to raise the elevation of all of lot 22 so that a surface gravity flow could be established. An elevation increase of about 3 feet would be required to establish a 0.3 percent flow, requiring about 3,000 yards^3 of earth fill, and boundary line retaining walls.

B. Gravity Flow Drainage:

Surface or subsurface drainage could be formally established, either along the existing irrigation ditch easement, or through other arrangements, with about 4 or 5 private properties being involved. One possibility would be a subsurface pipe directly to the existing 36" drain in Amado Road. A variation would be to improve Serna Road and use the street or additional storm sewer pipes along Serna Road to channel the run off to the existing storm sewer.

C. Surface Ponding and Seepage:

One alternative would be to provide a surface pond to collect storm run off, and permit seepage of the water into the subsoil.

C. Surface Ponding and Seepage: (Cont'd)

Total storm run off due to the design, storm would be about 2,080 ft^3, requiring a pond area of about 20 ft. by 35 ft. by 3 ft. deep. The percolation note of the soil has not been determined, but it appears that dry wells or other alternative percolation aids may be required to provide for an adequate percolation rate for the water to dissipate within 24 hours as required by the City of Albuquerque Ordinance. This conclusion is based on observation of the seepage pond at 2410 Rice Avenue, which shows surface water for ponds in excess of 48 hours after rainfall.

D. Surface Ponding and Pump Discharge

An alternative to the surface pond and seepage would be to discharge from the collecting pond by means of a powered pumping system. There are many combinations of pump sizes and collecting basins which will satisfy the requirement, from a 1.7 CFS pump (660 gpm) with a small catch basin, which has the capacity to pump at the design peak flow rate, or a small pump (9.4 gpm) which could discharge the collected 2,080^3 of storm run off within 24 hours. A practical combination would be to use a 50 gpm pump (for example ABS model RaBUSTA 201 sump pump, brochure attached, available for $98.00 current FOB Albuquerque) connected to a 2" PVC line which discharges to the gutter along the south side of Rice Avenue. A 20 ft. X 5 ft. x 3 ft. deep lined catch basin, in connection with a 20 ft. x 70 ft. x 1.25 ft. deep depressed landscape area, would provide the required storage and discharge.

IV. CONCLUSIONS:

A. Lot 22, Rice's Duranes Addition No. 1 is not within a 100 year or 10 year flood hazard. As identified by the Albuquerque Master Drainage Study. Run off drainage from the basin is dependent on the operation of the Duranes Pump Station.

B. Lot 22, is not affected by any significant local run off.

C. Storm run off due to development of lot 22 can be effectively contained internally to the property lines of each sub-lot, except for that caused by the common use access drive and driveway hard stands. This run off from hard stand can be collected in a sump for subsequent discharge to the public drainage structures.

D. Storm run off from lot 22 due to development can be discharged by pump to the established and adequate public right-of-way and drainage channels along Rice Avenue, and from there into the Amado, Floral and Duranes Roads. Storm drains for the design 100 year storm, the additional run off due to development will be 43F ft^3 total volume, and 0.5 ft^3/sec. peak flow.

E. Finished floor elevations for primary residential buildings should be established at or above 4,960.5 elevation to provide reasonable protection from possible flooding due to equipment breakdown or clogging of the local storm drain system.

F. Flow on Rice Avenue from sites uphill of lot 22 will not enter the property over the standard 8 inches high curb. The peak flow on Rice Avenue before passing lot 22 is:

$$Q = CEA = (.42)(2.15)(2.2)(1.4) = 2.8 \text{ CFS},$$

at a depth of .4 ft. and velocity of 1 ft./sec. (Plate 22.3 D-1 for 36' wide standard crown street). The street will not be overcapacity with the addition of the 0.13 CFS from the discharge of lot 22 (based on use of a 50 gpm discharge pump).

The Sump Machine

Rugged · Rust Proof · Reliable

T-F PUMP & PIPE CO.
1524 2nd St. N.W.
P.O. Box 25144
Albuquerque, N.M. 87125-0141
505/247-4036

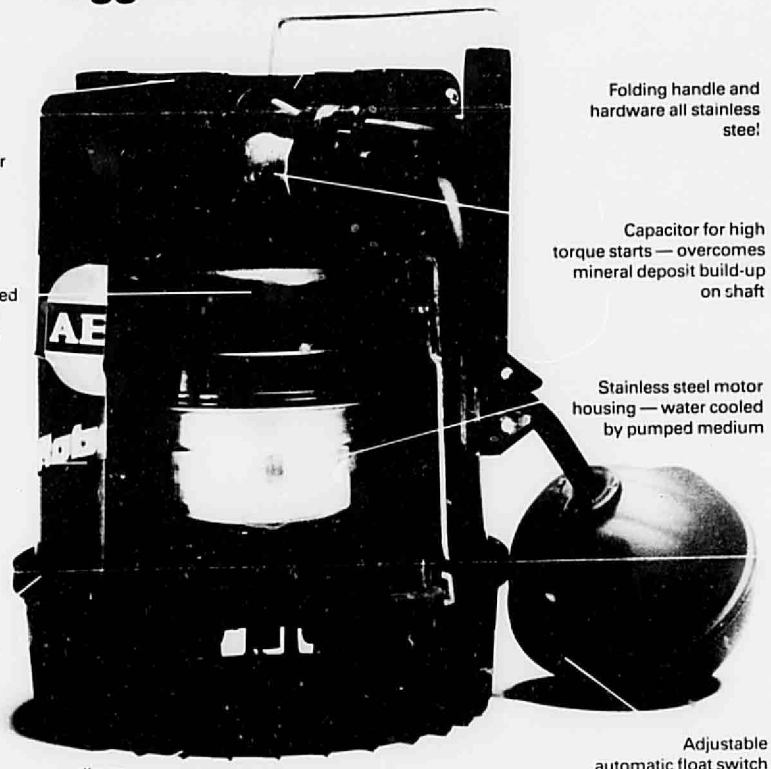

Vertical discharge, 1¼" with optional check valve or garden hose reducer

Dynamically balanced motor with thermal overload protection

Polypropylene pump housing and components

Clamping ring for simple, on site removal of bottom plate in case of clogging

Removable intake screen — allows portable pump down to ⅛"

Folding handle and hardware all stainless steel

Capacitor for high torque starts — overcomes mineral deposit build-up on shaft

Stainless steel motor housing — water cooled by pumped medium

Adjustable automatic float switch can't clog

ABS PUMPS **ROBUSTA from ABS · A Better Submersible**

ROBUSTA 201, 351, 501, 601

Heavy Duty Sump Machines

Features

- **Rust & corrosion proof • Energy efficient • Water cooled**
- **Capacitor start — High torque • Automatic or manual operation**
- **Built-in thermal protection • Rugged • Removable screen**

Specifications

	MODEL			
	201(KS)	351W(KS)	501W(KS)	601D(KS)
Motor	½ HP	½ HP	1½ HP	1½ HP
Speed (RPM)	3450	3450	3450	3450
Voltage/Phase	115/230/1	115/1	230/1	230/3
Amps	3.2	9	7.5	4
Discharge	1¼"	1¼"	1½"	2"
Weight	11 lbs.	19 lbs.	21 lbs.	21 lbs.
Cable Length	10 ft.	10 ft.	10 ft.	10 ft.

Max. Fluid Temperature:
125°F (50°C) continuous
210°F (100°C) intermittent–5 minutes max.
KS = Automatic Version with Float Switch

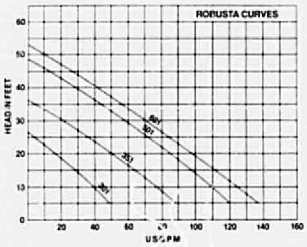

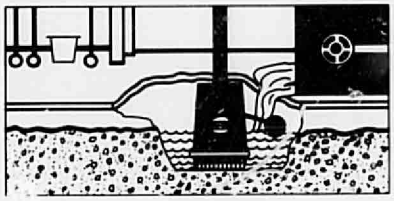

Applications

ROBUSTA sump pumps are designed for removing industrial process wastewater, floodwater, and any other clear or dirty water. ROBUSTA also handles light concentrations of chemical wastewater — check Materials of Construction for suitability (for more heavily polluted media see ABS Bulletin 611 "CHEM-ROBUSTA").

Permanent installations usually include a float switch (KS model) for automatic pumping. For portable applications, ROBUSTA pumps are used to fill or empty containers of every type. Removable bottom screen allows pump down to 1/8".

Dimensions

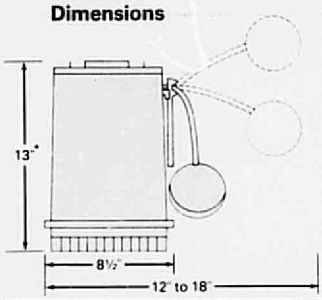

*10" (201)

Materials of Construction

Lower Motor Casing	304 SS
Upper Motor Casing & Pump Jacket	Reinforced Polypropylene
Shaft	304 SS
Shaft Seal	Lip Seal
Bearings	Heavy Duty Ball
Impeller	Polypropylene
O-Rings	Buna N
Inlet Screen	Polyethylene
Handle & Screws	304 SS
Float	Polypropylene
Cable	Neoprene

ABS Pumps Inc.
140 Pond View Drive
Meriden, Connecticut 06450
(203) 238-2700

The Sump Machine

T-P PUMP & PIPE CO.
1824 2nd St., N.W.
P.O. Box 25144
Albuquerque, N.M. 87125-0141
505/247-4036

Rugged · Rust Proof · Reliable

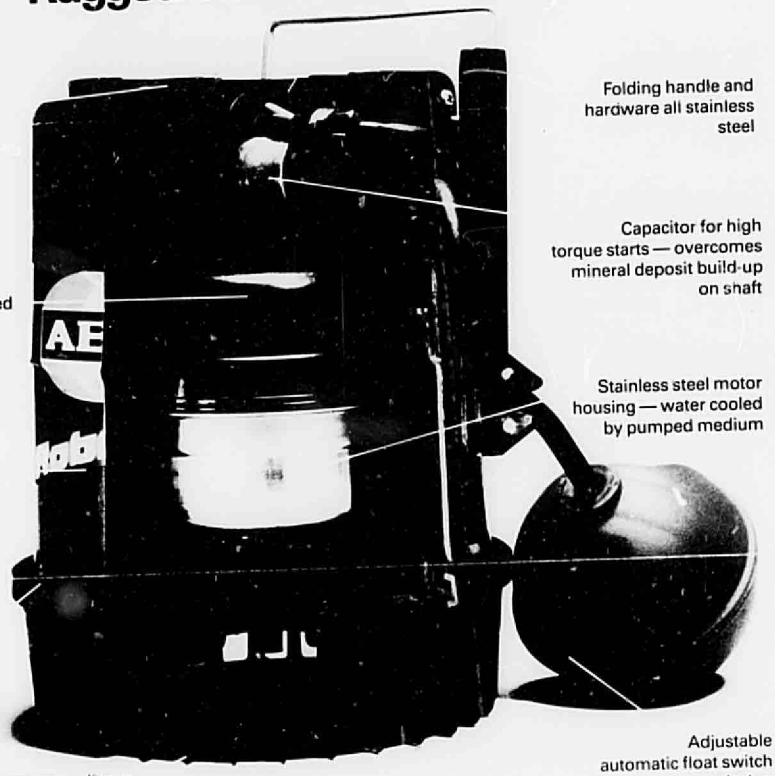

Vertical discharge, 1¼" with optional check valve or garden hose reducer

Dynamically balanced motor with thermal overload protection

Polypropylene pump housing and components

Clamping ring for simple, on site removal of bottom plate in case of clogging

Removable intake screen — allows portable pump down to ⅛"

Folding handle and hardware all stainless steel

Capacitor for high torque starts — overcomes mineral deposit build-up on shaft

Stainless steel motor housing — water cooled by pumped medium

Adjustable automatic float switch can't clog

ABS PUMPS **ROBUSTA from ABS · A Better Submersible**

ROBUSTA 201, 351, 501, 601

Heavy Duty Sump Machines

Features

- Rust & corrosion proof • Energy efficient • Water cooled
- Capacitor start — High torque • Automatic or manual operation
- Built-in thermal protection • Rugged • Removable screen

Specifications

	MODEL			
	201(KS)	351W(KS)	501W(KS)	601D(KS)
Motor	⅓ HP	½ HP	1½ HP	1½ HP
Speed (RPM)	3450	3450	3450	3450
Voltage/Phase	115/230/1	115/1	230/1	230/3
Amps	3.2	9	7.5	4
Discharge	1¼"	1¼"	1½"	2"
Weight	11 lbs.	19 lbs.	21 lbs.	21 lbs.
Cable Length	10 ft.	10 ft.	10 ft.	10 ft.

Max. Fluid Temperature:
125°F (50°C) continuous
210°F (100°C) intermittent–5 minutes max.
KS = Automatic Version with Float Switch

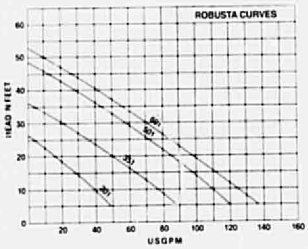

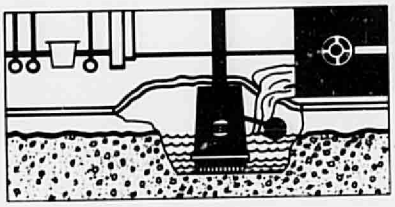

Applications

ROBUSTA sump pumps are designed for removing industrial process wastewater, floodwater, and any other clear or dirty water. ROBUSTA also handles light concentrations of chemical wastewater — check Materials of Construction for suitability (for more heavily polluted media see ABS Bulletin 611 "CHEM-ROBUSTA").

Permanent installations usually include a float switch (KS model) for automatic pumping. For portable applications, ROBUSTA pumps are used to fill or empty containers of every type. Removable bottom screen allows pump down to 1/8".

Dimensions

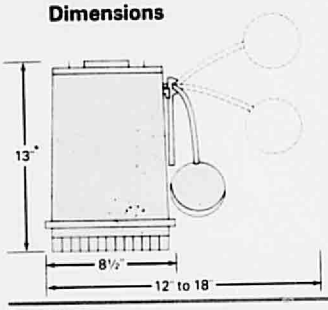

*10" (201)

Materials of Construction

Lower Motor Casing	304 SS
Upper Motor Casing & Pump Jacket	Reinforced Polypropylene
Shaft	304 SS
Shaft Seal	Lip Seal
Bearings	Heavy Duty Ball
Impeller	Polypropylene
O-Rings	Buna N
Inlet Screen	Polyethylene
Handle & Screws	304 SS
Float	Polypropylene
Cable	Neoprene

ABS Pumps Inc.
140 Pond View Drive
Meriden, Connecticut 06450
(203) 238-2700