HYDROLOGY H15/D24 BROADBENT BUSINESS CENTER

H15-D24

BROADBENT BUSINESS

CENTER

2 PLANS

CITY OF ALBUQUERQUE, NEW MEXICO
CITY ENGINEER'S OFFICE

MEMORANDUM - June 23, 1977
(Date)

TO:
- [ ] Robert Fosnaugh, Traffic Engineer
- [ ] William Otto, Water Engineer
- [ ] Robert Lowe, Liquid Waste Engineer
- [ ] Dwayne Sheppard, Assistant City Engineer-Field
- [ ] Bob Kielich, Assistant City Engineer-Design
- [ ] Monte Urban, Chief Surveyor
- [ ] George Paul, Street Maintenance Engineer
- [x] Bruno Conegliano, Asst. City Engineer-Hydrology
- [ ]

FROM: Q. R. Kielich, Assistant City Engineer-Design

SUBJECT: BROADBENT BUSINESS CENTER-MASTER PLAN WATER LINE

Attached drawings are for WATER, SANITARY SEWER, STORM SEWER, PAVING, STREET GRADES, DRAINAGE, AND _____, for subject proposed project.

Request review and comments on attached drawings. Typed comments will be submitted to Fred Gomez _____, by July 1, 1977.

QRK/tl

Attachments

CITY OF ALBUQUERQUE
MUNICIPAL DEVELOPMENT DEPARTMENT
ENGINEERING DIVISION

HYDROLOGY SECTION PROJ. NO._____ DATE:_____

PLANNING DIVISION NO._____

CONFERENCE RECAP

SUBJECT: S.W. Corner of Candelaria & I-25

	WHO	REPRESENTING
ATTENDANCE:	Chris Weiss	CTS.
	Andrew Hoyle	City

FINDINGS:

1. Ponding required due to downstream flood.
2. Grade to drain to Candelaria.
3. Pond discharge to be 0.5 cfs or undeveloped (whichever is greater)

The undersigned agrees that the above findings are summarized accurately and are only subject to change if further investigation reveals that they are not reasonable or that they are based on inaccurate information.

SIGNED: [illegible] SIGNED:_____

TITLE: Civil Engineer-City TITLE:_____

DATE: 4/26/83 DATE:_____

INFORMATION SHEET

PROJECT TITLE Motel Drainage
TYPE OF SUBMITTAL Drainage Review
ZONE ATLAS PAGE NO. H-15-D24
CITY ADDRESS Candelaria @ Frontage Rd NE
LEGAL DESCRIPTION Tract E-1A of Sandt's Ind. Add., Alg. N.M.
ENGINEERING FIRM CTS, Inc
CONTACT Chris Wins
ADDRESS 1100 Alvarado NE/S-A
PHONE 266-3444
OWNER —
CONTACT -
ADDRESS —
PHONE -
ARCHITECT Bill Shelton, AIA
CONTACT Bill Shelton
ADDRESS 1113 Rhode Island NE
PHONE 262-2363
SURVEYOR Walker Surveying Co
CONTACT Steve
ADDRESS —
PHONE 831-3091
CONTRACTOR —
CONTACT —
ADDRESS —
PHONE

RECEIVED
AUG 17 1983
ENGINEERING

DATE SUBMITTED 8-16-83
BY Chris Wins

Use this Information Sheet when submitting the following:

Drainage report or plan, conceptual grading and drainage plan, engineer's certification plan, erosion plan and grading plan. Provide the information applicable to your submittal.

FILE COPY

City of Albuquerque

September 13, 1983

Mr. Chris Weiss
CTS, INC.
1100 B ALVARADO N.E.
Albuquerque, N.M. 87110

RE: Drainage plan for Candelaria & West Frontage Road N.E. (H15-D24)

Dear Mr. Weiss:

These are my comments on the above mentioned project:

1. Plan needs more detail
   a) Show roof downspouts and door openings.
   b) Show width of sidewalk culvert.
   c) Does the paved swale extend to the north end of the building? (show sections through these swales)
   d) Show retaining wall and curb details.
   e) Show sections through east, west and south property lines.

2. V100 is defined as the 6 hour runoff volume which is 3751 feet^3, not 3000 feet^3.

3. A 4" diameter cast iron pipe laid at 1% will not carry 0.5cfs under the head conditions given. Outlet control controls and the flow will be 0.2+cfs. This and item #2 (above) will increase the required pond volume.

4. From the Area Drain with grate detail it does not appear that the 4" pipe can be installed at the invert grade shown on the plan.

5. Show some slope away from the building on the walk at the east and south side of the building.

If you have any questions on this please feel free to call me at 766-7644.

Thank you,

John Armstrong
Civil Engineer/Hydrology

JA/ccg

MUNICIPAL DEVELOPMENT DEPARTMENT

Richard S. Heller, P.E., City Engineer
LaMonte J. Urban, P.L.S., Chief City Surveyor

ENGINEERING DIVISION

123 Central Avenue N.W.
Albuquerque, New Mexico 87102
Telephone (505) 766-5040

22.7

RECEIVED

SEP 20 1983

ENGINEERING

RECEIVED SEP 19 1983 ENGINEERING

INFORMATION SHEET

Candelaria at W. Frontage Rd.

PROJECT TITLE Motel A-1 TYPE OF SUBMITTAL _____

ZONE ATLAS PAGE NO. H-15-D24 CITY ADDRESS _____

LEGAL DESCRIPTION Tract E-1-A Sundt's Industrial Addition

ENGINEERING FIRM CTS, Inc. CONTACT Chris Weiss

ADDRESS PO Box 142, Sandia Park PHONE 266-3444

OWNER _____ CONTACT _____

ADDRESS _____ PHONE _____

ARCHITECT Bill Shelton CONTACT Bill Shelton

ADDRESS 1113 Rhode Island PHONE 262-2363

SURVEYOR Walker Survey Co. CONTACT Steve Walker

ADDRESS _____ PHONE 831-3091

CONTRACTOR _____ CONTACT _____

ADDRESS _____ PHONE _____

DATE SUBMITTED 9-20-83

BY CTS, Inc.

Use this Information Sheet when submitting the following:

Drainage report or plan, conceptual grading and drainage plan, engineer's certification plan, erosion plan and grading plan. Provide the information applicable to your submittal.

P.O. Box 142, Sandia Park, New Mexico 87047

September 20, 1983

Mr. John Armstrong
Civil Engineer/Hydrology
City of Albuquerque
123 Central Avenue, NW
Albuquerque, New Mexico 87102

RE: Letter of comments from your office, (H-15/D-24)

Dear John,

The following items refers to your letter dated 9-13-83.

1. Plan Details

   a. Roof downspouts shown. Door opening locations are covered by the architects plans, but repeated on this plan, although not a previous requirement.

   b. Width of sidewalk grate noted--refer to City Standard Drawing K-16-1 added.

   c. The paved swale was removed by request of the architect to allow for landscaping along the west side of the structure.

   d. The retaining walls were removed, and the grade sloped down to meet existing gravel. Curb details covered by architect's plans, detail 4-1, but repeated on this plan.

   e. Additional sections shown at property lines,

2. We arrived at the 3000 ft^3 vol. value by adapting the SCS hydrograph (DRM Plats 22.2F-1) to the one hour duration, where the total time duration of the hydrograph is 5 times the time of concentration, or 50 minutes in this case. This rational was taken based on DRM Plats 22.2D-3, where for a 6 hour-storm, 84% of the accumulated rainfall occurs within the first hour. It is during this period that the pond routing is needed the worst. The remaining effect over the next 5 hours is a drizzle rainfall, which the pond would do little to affect.

   Analyzing this situation from another angle, we could find the total rainfall during the first hour, where (0.84)(2.2") = 1.85". Assume 0.2 inches of initial abstractions, with a net rainfal of 1.65" in

the first hour. Volume from the site thru the pond would then equal $(1.65)(1/12)(0.49)(43560) = 2935\ ft^3$. This valve compares very well with our value of $3000\ ft^3$ derived from our hydrograph.

3. Pipe size and slope revised for outlet control.

4. Area drain detail revised along with pipe inserts, to provide adequate clearance.

5. The architect typically provides for a cross slope of 1/4" per foot, but we revised the plan to reflect these slope requirements.

This concludes the response to your comments and we respectfully request approval of this drainage plan, as revised. Thank you.

Sincerely,

Christopher L. Weiss, P.E.
President

CLW:lp

City of Albuquerque
P.O. BOX 1293 ALBUQUERQUE, NEW MEXICO 87103

FILE COPY

October 10, 1983

Mr. Andre Houle
CTS, Inc.
1100 B Alvarado NE
Albuquerque, NM 87110

REF: MOTEL A-1 DRAINAGE PLAN (H15-D24)

Dear Mr. Houle:

The above mentioned plan, as revised on 10/05/83, is hereby approved. Please be sure that copies of the approved plan along with "Drainage Facilities Within City Right-of-Way" are attached to permit sets prior to submittal for Hydrology sign-off.

If you have any further questions, please feel free to call me at 766-7644.

Sincerely,

John Armstrong
Civil Engineer/Hydrology

JA:mrk

CITY OF ALBUQUERQUE P# 08663

DRAINAGE FACILITIES WITHIN CITY RIGHT-OF-WAY

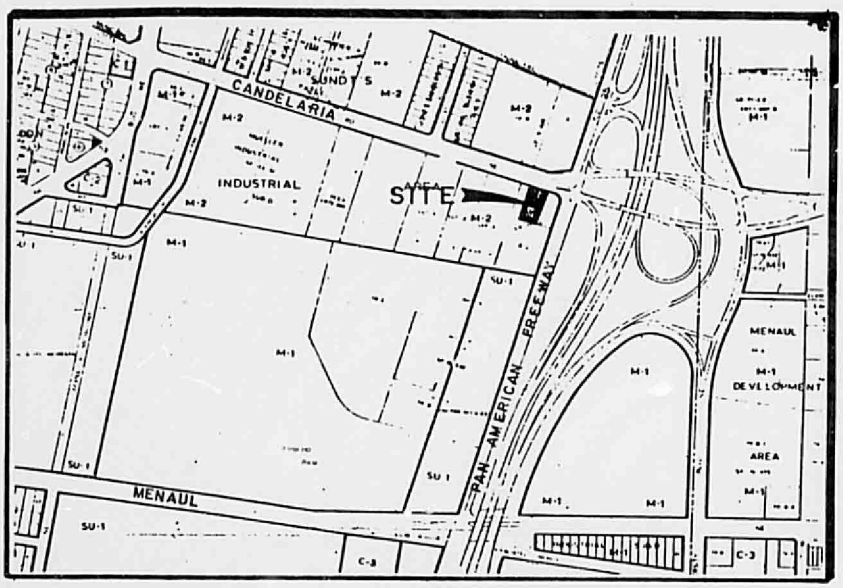

VICINITY MAP H-15

#15 D24

CHRISTOPHER L. ROSS
N.M. REG. 6653
REGISTERED PROFESSIONAL ENGINEER

NOTICE TO CONTRACTOR

1. An excavation/construction permit will be required before beginning any work within City right-of-way. An approved copy of these plans must be submitted at the time of application for this permit.
2. All work detailed on these plans to be performed, except as otherwise stated or provided hereon, shall be constructed in accordance with "Contract Documents for City-Wide Utilities and Cash Paving No. 31 "
3. Two working days prior to any excavation, contractor must contact Line Locating Service, 765-1234, for location of existing utilities.
4. Prior to construction, the contractor shall excavate and verify the horizontal and vertical locations of all obstructions. Should a conflict exist, the contractor shall notify the engineer so that the conflict can be resolved with a minimum amount of delay.
5. Backfill compaction shall be according to Collector street use.

C-96

APPROVALS	NAME	DATE	TITLE: Tract E-1-A, Replat of Tract E-1 Sundt's Industrial Addition Albuquerque, New Mexico 1520 Candelaria NE
A.C.E./DESIGN	[illegible]	18 Aug 83	
INSPECTOR	[illegible]	3-25-84	PERMIT NO.
A.C.E./FIELD	[illegible]	3/26/84	SHEET 1 OF 2 — MAP NO. H-15

CITY OF ALBUQUERQUE

DRAINAGE FACILITIES WITHIN CITY RIGHT-OF-WAY

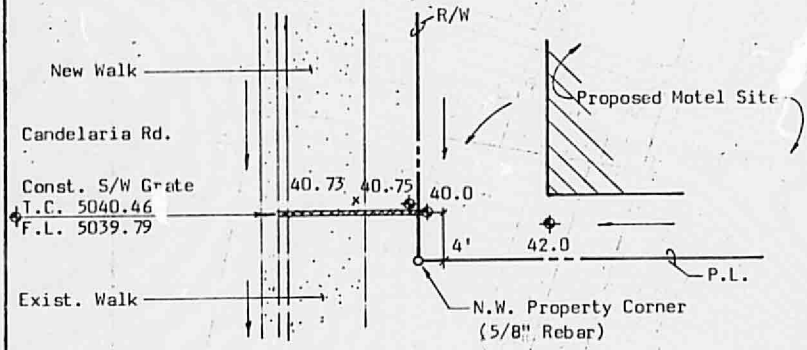

PLAN

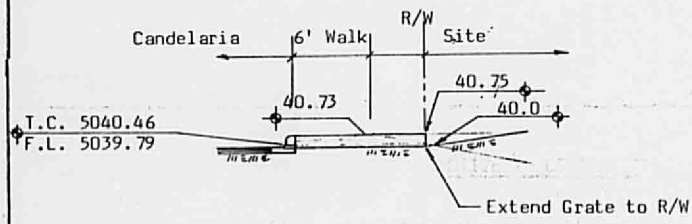

PROFILE

C-96

APPROVALS	NAME	DATE	TITLE: Tract E-1-A, Replat of Tract E-1 Sundt's Industrial Addition Albuquerque, New Mexico 1520 Candelaria NE
A.C.E./DESIGN	[illegible]	18 Aug 83	
INSPECTOR	[illegible]	3-25-84	PERMIT NO.
A.C.E./FIELD	W. J. McNamara	3/26/84	SHEET 2 OF 2 — MAP NO. H-15

CITY OF ALBUQUERQUE

DRAINAGE FACILITIES WITHIN CITY RIGHT-OF-WAY

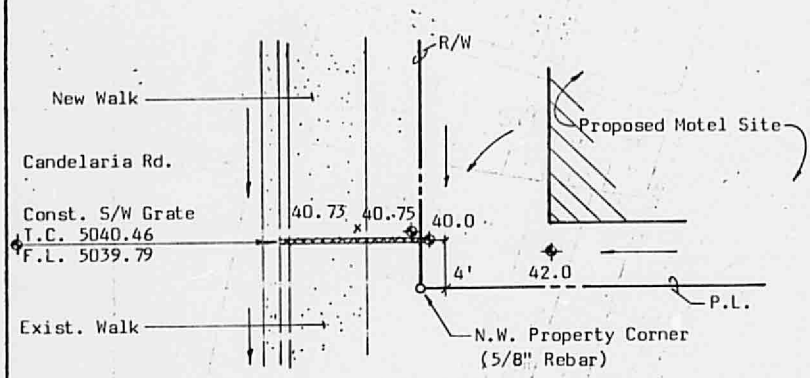

PLAN

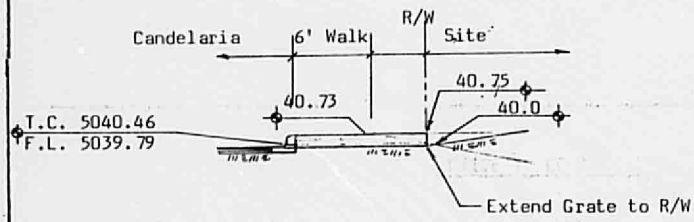

PROFILE

C-96

APPROVALS	NAME	DATE	TITLE: Tract E-1-A, Replat of Tract E-1 Sundt's Industrial Addition Albuquerque, New Mexico 1520 Candelaria NE	
A.C.E./DESIGN	[illegible]	18 Aug 83		
INSPECTOR	[illegible]	325-84	PERMIT NO.	MAP
A.C.E./FIELD	W.J. McNamara	3/26/84	SHEET 2 OF 2	NO. H-15